INTRODUCTION	1
PREPARATION	2
SERVICE SPECIFICATIONS	3
DIAGNOSTICS	5
ENGINE CONTROL SYSTEM	10
FUEL	11
EMISSION CONTROL	12
INTAKE	13
ENGINE MECHANICAL	14
EXHAUST	15
COOLING	16
LUBRICATION	17
IGNITION	18
STARTING & CHARGING	19
FRONT SUSPENTION	26
REAR SUSPENTION	27
TIRE & WHEEL	28
DRIVE SHAFT / PROPELLER SHAFT	30
BRAKE	32
PARKING BRAKE	33
AUTOMATIC TRANSMISSION / TRANS	40
MANUAL TRANSMISSION/TRANSAXLE	41
CLUTCH	42
STEERING COLUMN	50
POWER STEERING	51
HEATER & AIR CONDITIONER	55
SUPPLEMENTAL RESTRAINT SYSTEM	60

SEAT BELT 61
LIGHTING 65
WIPER & WASHER 66
AUDIO & VISUAL SYSTEM 67
WIRING 68
COMMUNICATION SYSTEM 69
WINDSHIELD/WINDOWGLASS/MIRROR 70
INSTRUMENT PANEL/METER 71
SEAT 72
THEFT DETTERENT & DOOR LOCK 73
SLIDING ROOF/CONVERTIBLE 74
ENGINE HOOD/DOOR 75
EXTERIOR/INTERIOR TRIM 76
VEHICLE CONTROL SYSTEM 80
CRUISE CONTROL 82
MAINTENANCE 99
ALPHABETICAL INDEX

FOREWORD

This manual (Volume 1) contains preparation, specifications and diagnostics procedures for the 2004 COROLLA.

Applicable models: ZZE130 series

For repair procedures for the engine, chassis and body, electrical service procedures, refer to VOLUME 2 (Pub. No. RM1037U2).

The manual is divided into 5 sections with a thumb index for each section at the edge of the pages.

Please note that the publications below have also been prepared as relevant service manuals for the components and systems in this vehicles.

Manual Name	Pub.No.
• A245E, A246E Automatic Transaxle Repair Manual	RM941U
• 2004 COROLLA Electrical Wiring Diagram	EWD533U

All information in this manual is based on the latest product information at the time of publication. However, specifications and procedures are subject to change without notice.

TOYOTA MOTOR CORPORATION

©2003 **TOYOTA MOTOR CORPORATION**
All rights reserved. This book may not be reproduced or copied, in whole or in part, without the written permission of Toyota Motor Corporation.
First Printing: May 9, 2003 01–030509–00

FOREWORD

This manual (Volume 2) contains engine, chassis and body and electrical service procedures for the 2004 COROLLA.

Applicable models: ZZE130 series

For preparation, specifications and diagnostics procedures, refer to VOLUME 1 (Pub. No. RM1037U1).

The manual is divided into 39 sections with a thumb index for each section at the edge of the pages.

Please note that the publications below have also been prepared as relevant service manuals for the components and systems in this vehicles.

Manual Name	Pub.No.
• A245E, A246E Automatic Transaxle Repair Manual	RM941U
• 2004 COROLLA Electrical Wiring Diagram	EWD533U

All information in this manual is based on the latest product information at the time of publication. However, specifications and procedures are subject to change without notice.

TOYOTA MOTOR CORPORATION

©2003 **TOYOTA MOTOR CORPORATION**
All rights reserved. This book may not be reproduced or copied, in whole or in part, without the written permission of Toyota Motor Corporation.
First Printing: May 9, 2003 01–030509–00

TERMS

01037–07

ABBREVIATIONS USED IN THIS MANUAL

Abbreviations	Meaning
ABS	Anti–Lock Brake System
AC	Alternating Current
ACC	Accessory
ACIS	Acoustic Control Induction System
ACSD	Automatic Cold Start Device
A.D.D.	Automatic Disconnecting Differential
A/F	Air–Fuel Ratio
AHC	Active Height Control Suspension
ALR	Automatic Locking Retractor
ALT	Alternator
AMP	Amplifier
ANT	Antenna
APPROX.	Approximately
ASSY	Assembly
A/T, ATM	Automatic Transmission (Transaxle)
ATF	Automatic Transmission Fluid
AUTO	Automatic
AUX	Auxiliary
AVG	Average
AVS	Adaptive Variable Suspension
B+	Battery Voltage
BA	Brake Assist
BACS	Boost Altitude Compensation System
BAT	Battery
BDC	Bottom Dead Center
B/L	Bi–Level
B/S	Bore–Stroke Ratio
BTDC	Before Top Dead Center
BVSV	Bimetallic Vacuum Switching Valve
Calif.	California
CB	Circuit Breaker
CCo	Catalytic Converter For Oxidation
CD	Compact Disc
CF	Cornering Force
CG	Center Of Gravity
CH	Channel
COMB.	Combination
CPE	Coupe
CPS	Combustion Pressure Sensor
CPU	Central Processing Unit
CRS	Child Restraint System
CTR	Center
C/V	Check Valve
CV	Control Valve
CW	Curb Weight
DC	Direct Current
DEF	Defogger
DFL	Deflector

Abbreviations	Meaning
DIFF.	Differential
DIFF. LOCK	Differential Lock
D/INJ	Direct Injection
DLC	Data Link Connector
DLI	Distributorless Ignition
DOHC	Double Overhead Camshaft
DP	Dash Pot
DS	Dead Soak
DSP	Digital Signal Processor
DTC	Diagnostic Trouble Code
DVD	Digital Versatible Disc
EBD	Electric Brake Force Distribution
ECAM	Engine Control And Measurement System
ECD	Electronic Controlled Diesel
ECDY	Eddy Current Dynamometer
ECU	Electronic Control Unit
ED	Electro–Deposited Coating
EDU	Electronic Driving Unit
EDIC	Electric Diesel Injection Control
EFI	Electronic Fuel Injection
E/G	Engine
EGR	Exhaust Gas Recirculation
EGR–VM	EGR–Vacuum Modulator
ELR	Emergency Locking Retractor
EMPS	Electric Motor Power Steering
ENG	Engine
ESA	Electronic Spark Advance
ETCS–i	Electronic Throttle Control System–intelligent
EVAP	Evaporative Emission Control
EVP	Evaporator
E–VRV	Electric Vacuum Regulating Valve
EX, EXH	Exhaust
FE	Fuel Economy
FF	Front–Engine Front–Wheel–Drive
F/G	Fuel Gauge
FIPG	Formed In Place Gasket
FL	Fusible Link
F/P	Fuel Pump
FPU	Fuel Pressure Up
Fr	Front
FR	Front–Engine Rear–Wheel–Drive
F/W	Flywheel
FW/D	Flywheel Damper
FWD	Front–Wheel–Drive
GAS	Gasoline
GND	Ground
GPS	Global Positioning System
HAC	High Altitude Compensator
H/B	Hatchback
H–FUSE	High Current Fuse
HI	High

Abbreviations	Meaning
HID	High Intensity Discharge (Head Lamp)
HPU	Hydraulic Power Unit
HSG	Housing
HT	Hard Top
HWS	Heated Windshield System
IAC	Idle Air Control
IC	Integrated Circuit
IDI	Indirect Diesel Injection
IFS	Independent Front Suspension
IG	Ignition
IIA	Integrated Ignition Assembly
IN	Intake (Manifold, Valve)
INT	Intermittent
I/P	Instrument Panel
IRS	Independent Rear Suspension
ISC	Idle Speed Control
J/B	Junction Block
J/C	Junction Connector
KD	Kick–Down
LAN	Local Area Network
LB	Liftback
LCD	Liquid Crystal Display
LED	Light Emitting Diode
LH	Left–Hand
LHD	Left–Hand Drive
L/H/W	Length, Height, Width
LLC	Long–Life Coolant
LNG	Liquified Natural Gas
LO	Low
LPG	Liquified Petroleum Gas
LSD	Limited Slip Differential
LSP & PV	Load Sensing Proportioning And Bypass Valve
LSPV	Load Sensing Proportioning Valve
MAP	Manifold Absolute Pressure
MAX.	Maximum
M–FUSE	Medium Current Fuse
MIC	Microphone
MIL	Malfunction Indicator Lamp
MIN.	Minimum
MG1	Motor Generator No.1
MG2	Motor Generator No.2
MP	Multipurpose
MPI	Multipoint Electronic Injection
MPX	Multiplex Communication System
M/T, MTM	Manual Transmission (Transaxle)
MT	Mount
MTG	Mounting
N	Neutral
NA	Natural Aspiration
No.	Number
O/D	Overdrive

Abbreviations	Meaning
OEM	Original Equipment Manufacturing
OHC	Overhead Camshaft
OHV	Overhead Valve
OPT	Option
ORVR	On–board Refilling Vapor Recovery
O/S	Oversize
P & BV	Proportioning And Bypass Valve
PCS	Power Control System
PCV	Positive Crankcase Ventilation
PKB	Parking Brake
PPS	Progressive Power Steering
PS	Power Steering
PTO	Power Take–Off
P/W	Power Window
R & P	Rack And Pinion
RAM	Random Access Memory
R/B	Relay Block
RBS	Recirculating Ball Type Steering
R/F	Reinforcement
RFS	Rigid Front Suspension
RH	Right–Hand
RHD	Right–Hand Drive
RLY	Relay
ROM	Read Only Memory
Rr	Rear
RR	Rear–Engine Rear–Wheel–Drive
RRS	Rigid Rear Suspension
RWD	Rear–Wheel–Drive
SDN	Sedan
SEN	Sensor
SICS	Starting Injection Control System
SMT	Sequential Manual Transmission
SOC	State Of Charge
SOHC	Single Overhead Camshaft
SPEC	Specification
SPI	Single Point Injection
SRS	Supplemental Restraint System
SSM	Special Service Materials
SST	Special Service Tools
STD	Standard
STJ	Cold–Start Fuel Injection
SW	Switch
SYS	System
T/A	Transaxle
TACH	Tachometer
TBI	Throttle Body Electronic Fuel Injection
TC	Turbocharger
TCCS	TOYOTA Computer–Controlled System
TCV	Timing Control Valve
TDC	Top Dead Center
TEMP.	Temperature

Abbreviations	Meaning
TEMS	TOYOTA Electronic Modulated Suspension
TFT	Toyota Free–Tronic
TIS	Total Information System For Vehicle Development
T/M	Transmission
TMC	TOYOTA Motor Corporation
TMMK	TOYOTA Motor Manufacturing Kentucky, Inc.
TRAC	Traction Control System
TURBO	Turbocharge
TWC	Three–Way Catalyst
TVIP	TOYOTA Vehicle Intrusion Protection
U/D	Underdrive
U/S	Undersize
VCV	Vacuum Control Valve
VENT	Ventilator
VIN	Vehicle Identification Number
VPS	Variable Power Steering
VSC	Vehicle Stability Control
VSV	Vacuum Switching Valve
VTV	Vacuum Transmitting Valve
VVT–i	Variable Valve Timing–intelligent
w/	With
WGN	Wagon
W/H	Wire Harness
w/o	Without
WU–TWC	Warm Up Three–way Catalytic Converter
WU–OC	Warm Up Oxidation Catalytic Converter
1st	First
2nd	Second
2WD	Two Wheel Drive Vehicle (4 x 2)
3rd	Third
4th	Fourth
4WD	Four Wheel Drive Vehicle (4 x 4)
4WS	Four Wheel Steering System
5th	Fifth

CAUTION

This manual does not include all the necessary items about repair and service. This manual is made for the purpose of the use for the persons who have special techniques and certifications. In the cases that non–specialized or uncertified technicians perform repair or service only using this manual or without proper equipment or tool, that may cause severe injury to you or other people around and also cause damage to your customer’s vehicle.

In order to prevent dangerous operation and damages to your customer’s vehicle, be sure to follow the instruction shown below.

- Must read this manual thoroughly. It is especially important to have a good understanding of all the contents written in the PRECAUTION of ”INTRODUCTION” section.
- The service method written in this manual is very effective to perform repair and service. When performing the operations following the procedures using this manual, be sure to use tools specified and recommended. If using non–specified or recommended tools and service method, be sure to confirm safety of the technicians and any possibility of causing personal injury or damage to the customer’s vehicle before starting the operation.
- If part replacement is necessary, must replace the part with the same part number or equivalent part. Do not replace it with inferior quality.
- It is important to note that this manual contains various ”Cautions” and ”Notices” that must be carefully observed in order to reduce the risk of personal injury during service or repair, or the possibility that improper service or repair may damage the vehicle or render it unsafe. It is also important to understand that these ”Cautions” and ”Notices” are not exhaustive, because it is important to warn of all the possible hazardous consequences that might result from failure to follow these instructions.

01036–08

ELECTRONIC CIRCUIT INSPECTION PROCEDURE

1. BASIC INSPECTION

(a) RESISTANCE MEASURING CONDITION OF ELECTRONIC PARTS

(1) Unless stated, all resistance is measured at an ambient temperature of 20°C (68°F). As the resistance may be outside the specifications if measured at high temperatures immediately after the vehicle has been running, measurements should be made when the engine has cooled down.

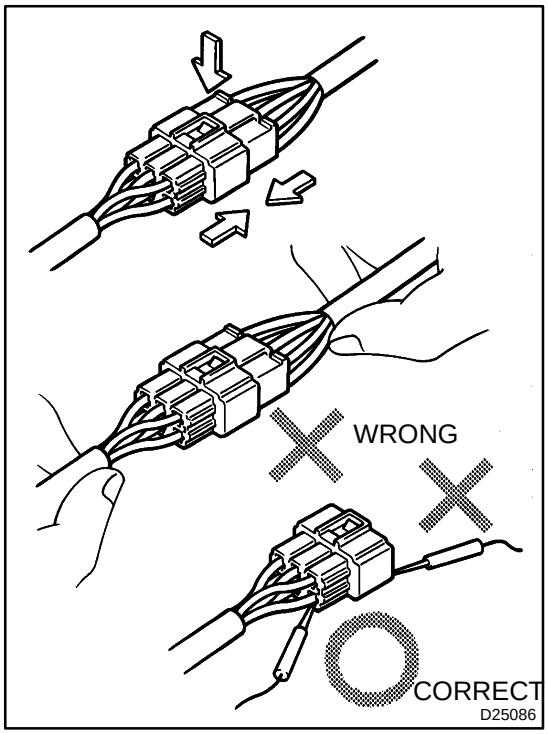

(b) HANDLING OF CONNECTOR

(1) When removing the connector with lock, press the connector in the direction of the engagement and remove the lock by lightly pressing the lock claw.

(2) When removing the connector, do not hold the harness, but hold the connector.

(3) Before connecting the connector, check that there is no deformation, damage or missing terminals.

(4) The connector with a lock should be securely connected until it makes a ”click” sound.

(5) When checking the connector with a Toyota electrical tester, check it from the backside (harness side) of the connector using a mini test lead.

NOTICE:

- **As a water proof connector cannot be checked from the backside, check by connecting the sub–harness.**
- **Do not damage the terminals by moving the inserted tester needle.**

(c) CONNECTOR CHECKING POINTS

(1) Checking when the connector is connected:
By holding the connector, check the inserted condition and locking efficiency (engaged condition).

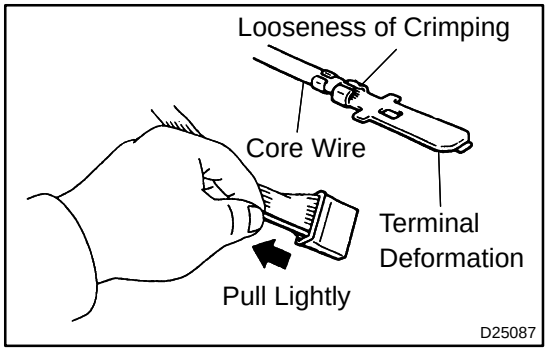

(2) Checking when the connector is removed:
Check by lightly pulling the wire harness (missing terminal, terminal crimping condition, core wire break).
Check visually for any rust, metal particles, water and bent terminals (rust, mixing of foreign object, terminal deformation).

NOTICE:

When testing a gold–plated female terminal, always use a gold–plated male terminal.

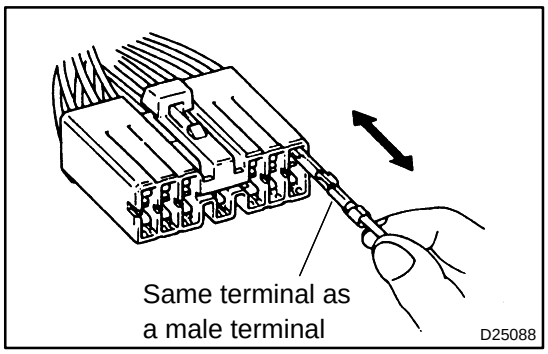

(3) Checking of the contact pressure of the terminal:
Prepare a spare male terminal.
Insert it into a female terminal, check the engaged condition and sliding resistance.

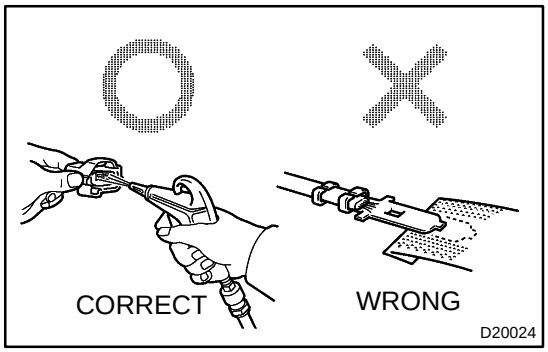

(d) REPAIR METHOD OF CONNECTOR TERMINAL

(1) If there is on the contact point, clean the contact point using an air gun or shop rag. However, never polish the contact point using sand paper as the platings may come off.

(2) In case of abnormal contact pressure, replace the female terminal. However, if a male terminal is gold–plated (gold color), use gold–plated female terminal and if it is silver–plated (silver color), use silver–plated female terminal.

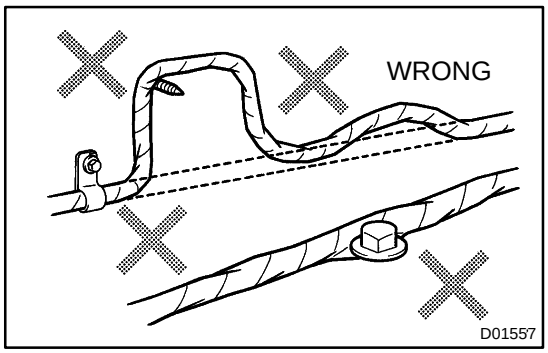

(e) HANDLING OF WIRE HARNESS

(1) When removing the wire harness, check the positioning of the wiring and clamping before starting work in order to be able to restore it correctly.

(2) Never twist, pull or loosen the wire harness more than necessary.

(3) Never allow the wire harness to come into contact with a high–temperature, rotating, moving, vibrating or sharp (edge of the panel, tip of the screw, etc.) part.

(4) When installing parts, never let the wire harness be interfered with.

(5) Never cut or break the cover of the wire harness. If one is cut or broken, replace it or securely repair it with electrical tape.

Fig. 1

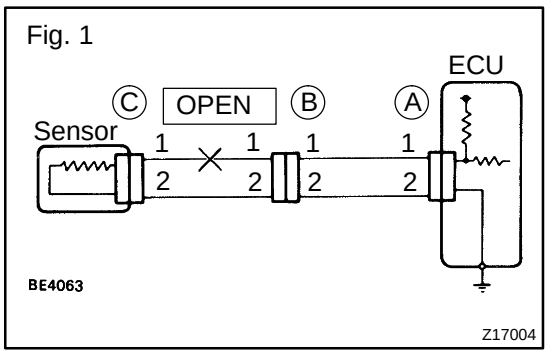

2. CHECK OPEN CIRCUIT

(a) For the open circuit in the wire harness in Fig. 1, perform a resistance check in step (b) or a voltage check in step (c) to locate the section.

Fig. 2

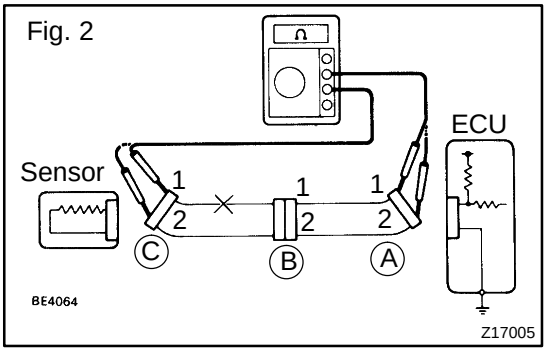

(b) Check the resistance.

(1) Disconnect connectors A and C and measure the resistance between them.

Resistance: 1 Ω or less

HINT:

Measure the resistance while lightly shaking the wire harness vertically and horizontally.

In the case of Fig. 2:

Between terminal 1 of connector A and terminal 1 of connector C → 10 KΩ or higher

Between terminal 2 of connector A and terminal 2 of connector C → Below 1 Ω

Therefore, the cause is an open circuit between terminal 1 of connector A and terminal 1 of connector C.

Fig. 3

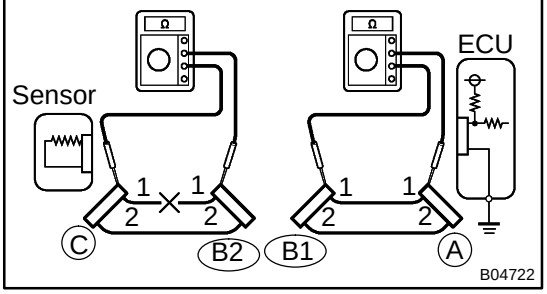

(2) Disconnect connector B and measure the resistance between the connectors.

In the case of Fig. 3:

Between terminal 1 of connector A and terminal 1 of connector B1 → Below 1 Ω

Between terminal 1 of connector B2 and terminal 1 of connector C → 10 KΩ

Therefore, the cause is an open circuit between terminal 1 of connector B2 and terminal 1 of connector C.

Fig. 4

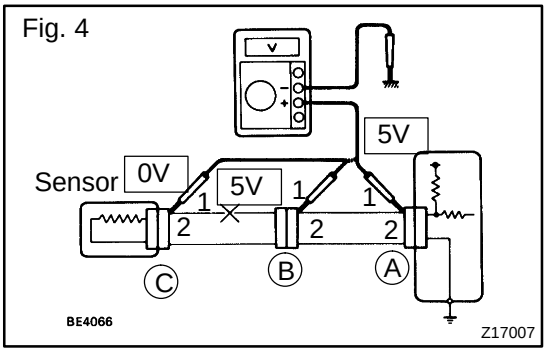

(c) Check the voltage.

(1) In a circuit in which voltage is applied (to the ECU connector terminal), an open circuit can be checked by conducting a voltage check.

As shown in Fig. 4, with each connector still connected, measure the voltage between the body ground and terminal 1 of connector A at the ECU 5 V output terminal, terminal 1 of connector B, and terminal 1 of connector C, in that order.

(2) If the results are:

5 V: Between terminal 1 of connector A and body ground

5 V: Between terminal 1 of connector B and body ground

0 V: Between terminal 1 of connector C and body ground

Therefore, the cause is an open circuit in the wire harness between terminal 1 of connector B and terminal 1 of connector C.

Fig. 5

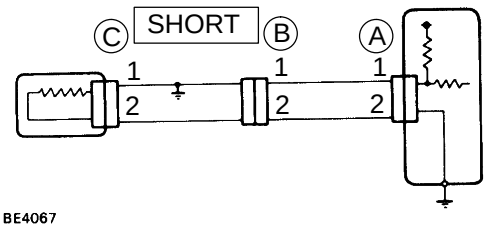

3. CHECK SHORT CIRCUIT

(a) If the wire harness is ground shorted as shown in Fig. 5, locate the section by conducting a resistance check with the body ground in step (b).

Fig. 6

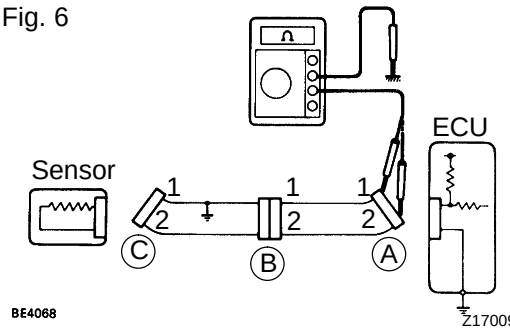

(b) Check the resistance with the body ground.

(1) Disconnect connectors A and C and measure the resistance between terminals 1 and 2 of connector A and the body ground.

Resistance: 10 KΩ or higher

HINT:

Measure the resistance while lightly shaking the wire harness vertically and horizontally.

In the case of Fig. 6:

Between terminal 1 of connector A and body ground → Below 1 Ω

Between terminal 2 of connector A and body ground → 10 KΩ or higher

Therefore, the cause is a short circuit between terminal 1 of connector A and terminal 1 of connector C.

Fig. 7

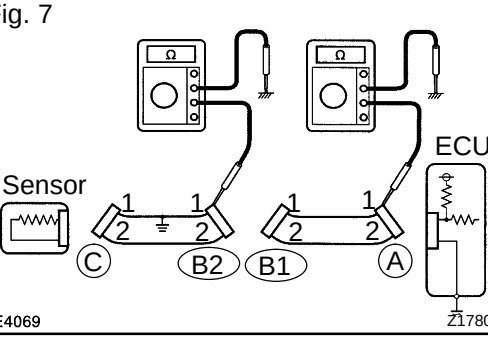

(2) Disconnect connector B and measure the resistance between terminal 1 of connector A and the body ground, and terminal 1 of connector B2 and the body ground.

In the case of Fig. 7:

Between terminal 1 of connector A and body ground → 10 KΩ or higher

Between terminal 1 of connector B2 and body ground → Below 1 Ω

Therefore, the cause is a short circuit between terminal 1 of connector B2 and terminal 1 of connector C.

4. CHECK AND REPLACE ECU

NOTICE:

- **Start an inspection of the connector from the backside of the connector on the wire harness side with the connector connected to the ECU.**
- **When no measurement condition is specified, perform the inspection with the engine stopped and also the ignition switch ON.**

(a) First check the ECU ground circuit. If it is faulty, repair it. If it is normal, the ECU could be faulty. In this case, replace the ECU with one that functions normally and check if the symptoms appear.

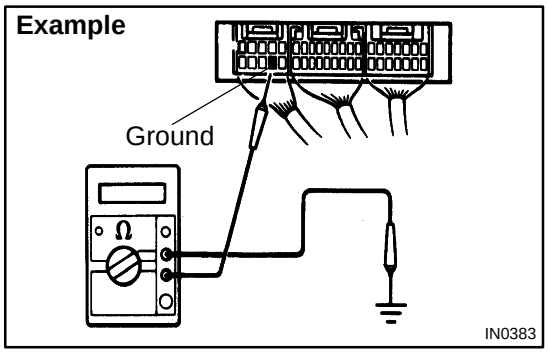

(1) Measure the resistance between the ECU ground terminal and body ground.

Resistance: 1 Ω or less

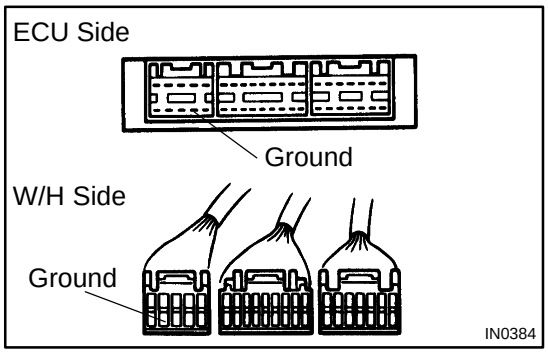

(2) Disconnect the ECU connector, check the ground terminals on the ECU side and wire harness side for bends and check the contact pressure.

HOW TO TROUBLESHOOT ECU CONTROLLED SYSTEMS

01034–08

GENERAL INFORMATION

There are many ECU controlled systems used in the COROLLA. In general, ECU controlled system are considered to be very intricate and require a high level of technical knowledge and expert skill to troubleshoot. The fact is, however, that if you proceed by inspecting the circuits one by one, troubleshooting of these systems is not complex. If you have adequate understanding of the system and basic knowledge of electricity, the problem can be accurately diagnosed and fixed. This manual is designed based on the above principle to help service technicians perform accurate and effective troubleshooting, and is compiled for the following major ECU controlled systems:

The troubleshooting procedures are described on the following pages.

System	Page
1. SFI System	05–1
2. ABS with EBD System	05–294
3. Electronic Controlled Automatic Transaxle [ECT]	05–346
4. Supplemental Restraint System	05–421
5. Audio System	05–596
6. Combination Meter	05–638
7. Power Door Lock Control System	05–670
8. Wireless Door Lock Control System	05–685
9. TOYOTA Vehicle Intrusion Protection System	05–700
10.Cruise Control System	05–742

FOR USING HAND–HELD TESTER

- Before using the tester, the tester's operator manual should be read thoroughly.
- If the tester cannot communicate with the ECU controlled systems when you have connected the cable of tester to the DLC3, turned the ignition switch ON and operated the tester, there is a problem on the vehicle side or tester side.
  (1) If the communication is normal when the tester is connected to another vehicle, inspect the diagnosis data link line (Bus⊕line) or ECU power circuit of the vehicle.
  (2) If the communication is still impossible when the tester is connected to another vehicle, the problem is probably in the tester itself, so perform the Self Test procedures outlined in the Tester Operator's Manual.

HOW TO USE THIS MANUAL

0103I–08

GENERAL INFORMATION

1. GENERAL DESCRIPTION

(a) This manual is made in accordance with SAE J2008.

(b) Generally, repair operations can be separated in the following 3 main processes:
1. Diagnosis
2. Removing/Installing, Replacing, Disassembling/Reassembling, Checking and Adjusting
3. Final Inspection

(c) This manual explains the 1st process of ”Diagnosis” (found in the ”Diagnostics” section), the 2nd process of ”Removing and Installing, Replacing, Disassembling, Installing and Checking, and Adjusting”, but the 3rd process of ”Final Inspection” is omitted.

(d) The following essential operations are not written in this manual. However, these operations must be performed in actual situations.
(1) Operations with a jack or lift
(2) Cleaning of a removed part when necessary
(3) Visual check

2. INDEX

(a) An alphabetical INDEX section is provided at the end of the book as a reference to help you find the item to be repaired.

3. PREPARATION

(a) Use of special service tools (SST) and special service materials (SSM) may be required, depending on the repair situation. Be sure to use SST and SSM when they are required and follow the working procedure properly. A list of SST and SSM is in the Preparation section of this manual.

4. REPAIR PROCEDURES

(a) Component drawing is placed under the title where necessary.

(b) Non–reusable parts, grease application area, precoated parts and tightening torque are specified in the component drawings.

Example:

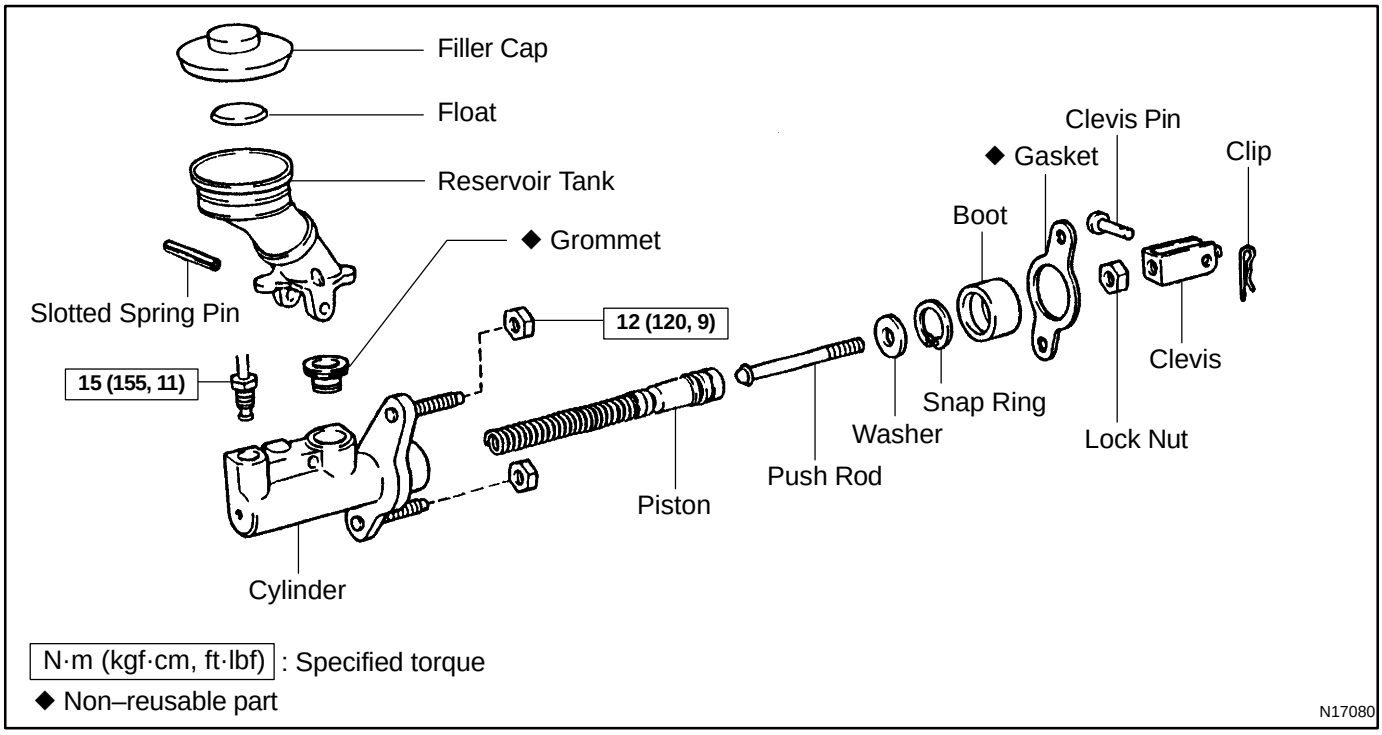

(c) Tightening torque, grease application area, and non–reusable parts are described as important points in the procedures.

NOTICE:

There are cases where such information can only be explained by using an illustration. In these cases, all the information such as torque, oil, etc. are described in the illustration.

(d) Installing procedures are performed in the reverse order of the removal and only the important points are described.

(e) Only items with points are described in the procedure, and the operational portion and content are placed using an illustration. In the explanations, details of the operational method, standard value and notices are placed.

(f) There may be a case where the illustrations of similar models are used. In that case, specific details may be different from the actual vehicle.

(g) The procedures are presented in a step–by–step format:

(1) The illustration shows what to do and where to do it.

(2) The task heading tells what to do.

(3) The explanation text tells how to perform the task and gives other information such as specifications and warnings.

Example:

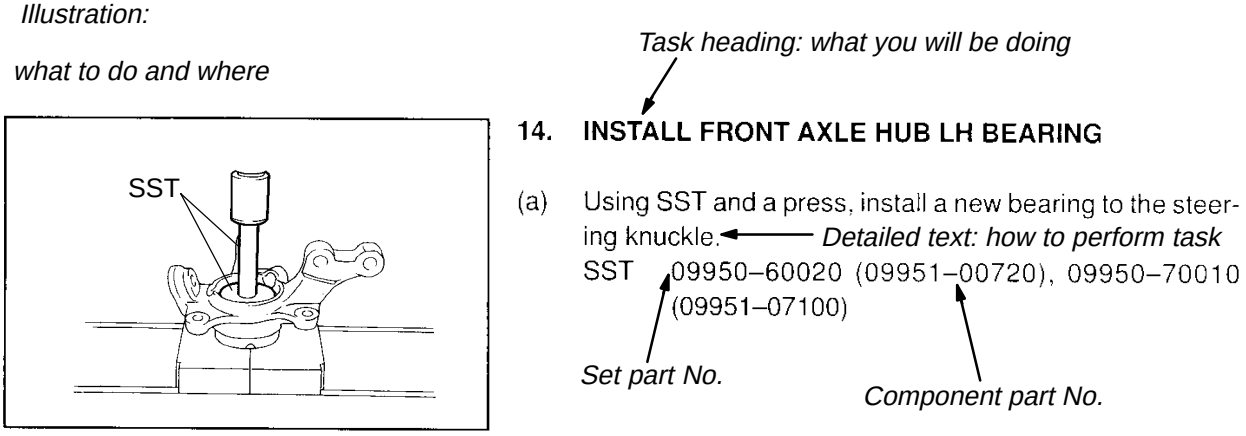

HINT:

This format provides an experienced technician with a FAST TRACK to the necessary information. The task heading can be read at a glance when necessary and the text below provides detailed information. Important specifications and warnings always are written in bold type to stand out from the rest of the text.

5. SERVICE SPECIFICATIONS

(a) Specifications are presented in bold type throughout the manual. You never have to leave the procedure to look up your specifications. The specifications are also found in the Service Specifications section for quick reference.

6. TERMS DEFINITION

CAUTION	Indicates the possibility of injury to you or other people.
NOTICE	Indicates the possibility of damage to the components being repaired.
HINT	Provides additional information to help you to perform the repair efficiently.

7. SI UNIT

(a) The units given in this manual are primarily expressed according to the SI UNIT (International System of Units), and alternately expressed in the metric system and in the English System.

Example:

Torque: 30 N·m (310 kgf·cm, 22 ft·lbf)

010D9–02

VEHICLE LIFT AND SUPPORT LOCATIONS

1. NOTICE ABOUT VEHICLE CONDITION WHEN JACKING UP

(a) As a rule, the vehicle must be unloaded when jacking up. Never jack up or lift up the vehicle loaded with things of heavy weight.

(b) When removing any parts of heavy weight like the engine and transmission, the center of gravity of the vehicle moves. Place a balance weight so as to keep it from rolling, or hold the jacking support location using the mission jack.

2. NOTICE FOR USING 4 POST LIFT

(a) Follow the instruction manual for a safety operation.

(b) Do not damage tires or wheels with a free wheel beam.

(c) Using a wheel stopper, fix the vehicle.

3. NOTICE FOR USING JACK AND SAFETY STAND

(a) Work in a flat place using a wheel stopper at all times.

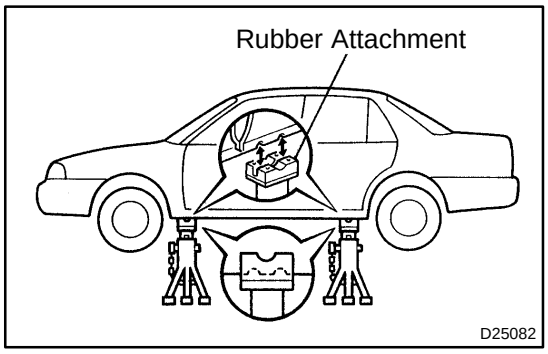

(b) Use a safety stand with a rubber attachment, as shown in the illustration.

(c) Support the specified location with a jack and safety stand accurately.

(d) When jacking up the front wheels, release the parking brake and place wheel stoppers only behind the rear wheels. When jacking up the rear wheels, place wheel stoppers only in front of the front wheels.

(e) Do not work or leave the vehicle supported only by a jack. Be sure to support the vehicle with a safety stand.

(f) When jacking up only the front wheels or only the rear wheels, place wheel stoppers to both sides of the wheels that contact ground.

(g) When jacking down the vehicle with its front wheels jacked up, release the parking brake and place wheel stoppers only in front of the rear wheels. When jacking down the vehicle with its rear wheels jacked up, place wheel stoppers only behind the front wheels.

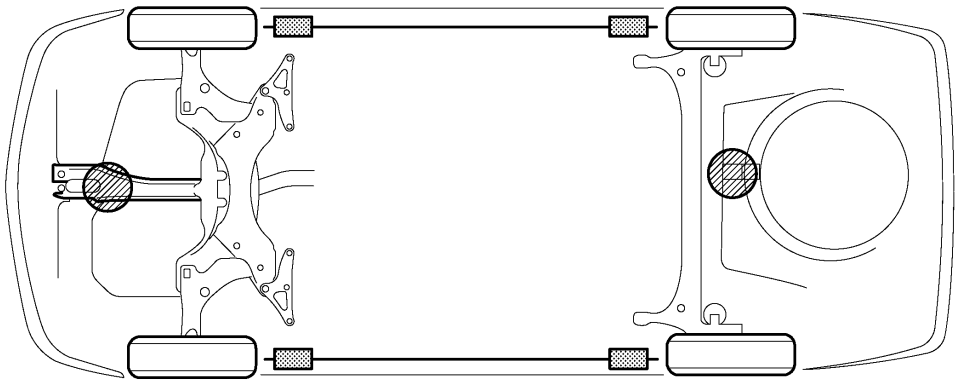

: SUPPORT POSITION, PANTOGRAPH JACK POSITION

: JACK POSITION

Y

D27350

4. NOTICE FOR USING SWING ARM TYPE LIFT

(a) Follow the instruction manual of the lift for a safe operation.
(b) Use a cradle with a rubber attachment, as shown in the illustration.
(c) Set in the vehicle so as to make its center of gravity as close as possible to the center of the lift. (”L” becomes short.)
(d) Place the vehicle horizontally by adjusting the height of the cradle, and match the groove of the cradle and the safety stand support location accurately.
(e) Be sure to lock the swing arm during the operation.
(f) Lift the vehicle up until the tires float, and shake the vehicle to make sure that the vehicle is stable.

5. NOTICE FOR USING PLATE TYPE LIFT

(a) Follow the instruction manual of the lift for a safe operation.
(b) Use a plate lift attachment.
(c) Be sure to set the vehicle to the specified position.

Right and left set position	• Place the vehicle over the center of the lift.
Front and rear set position	• Align the cushion gum ends of the plate with the attachment lower ends (A and C). • Align the attachment upper end (B) with the rocker flange front side notch.

(d) Lift the vehicle up until the tires float a bit, and shake the vehicle to make sure that the vehicle is stable.

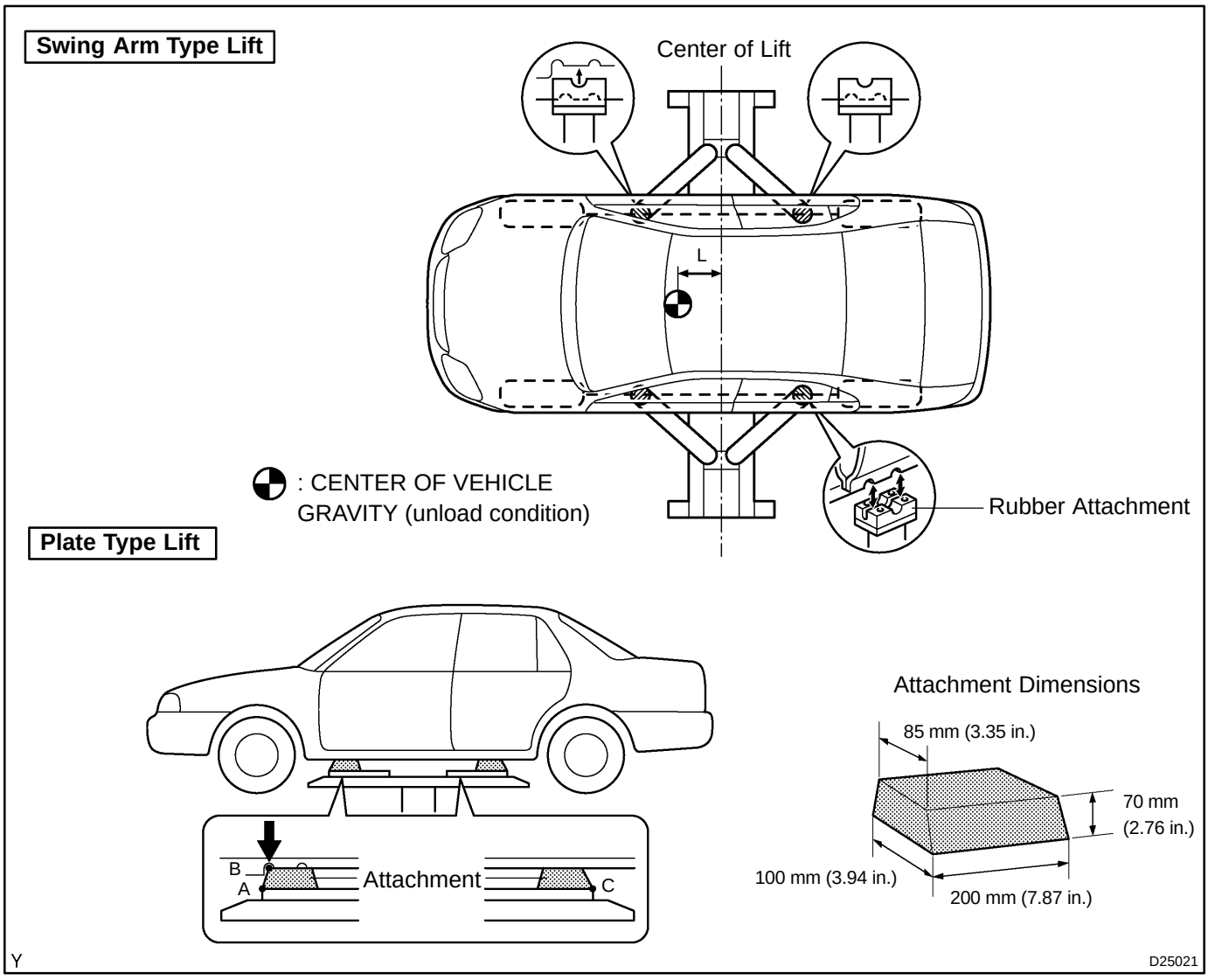

REPAIR INSTRUCTION

010D8–02

PRECAUTION

1. BASIC REPAIR HINT

(a) HINTS ON OPERATIONS

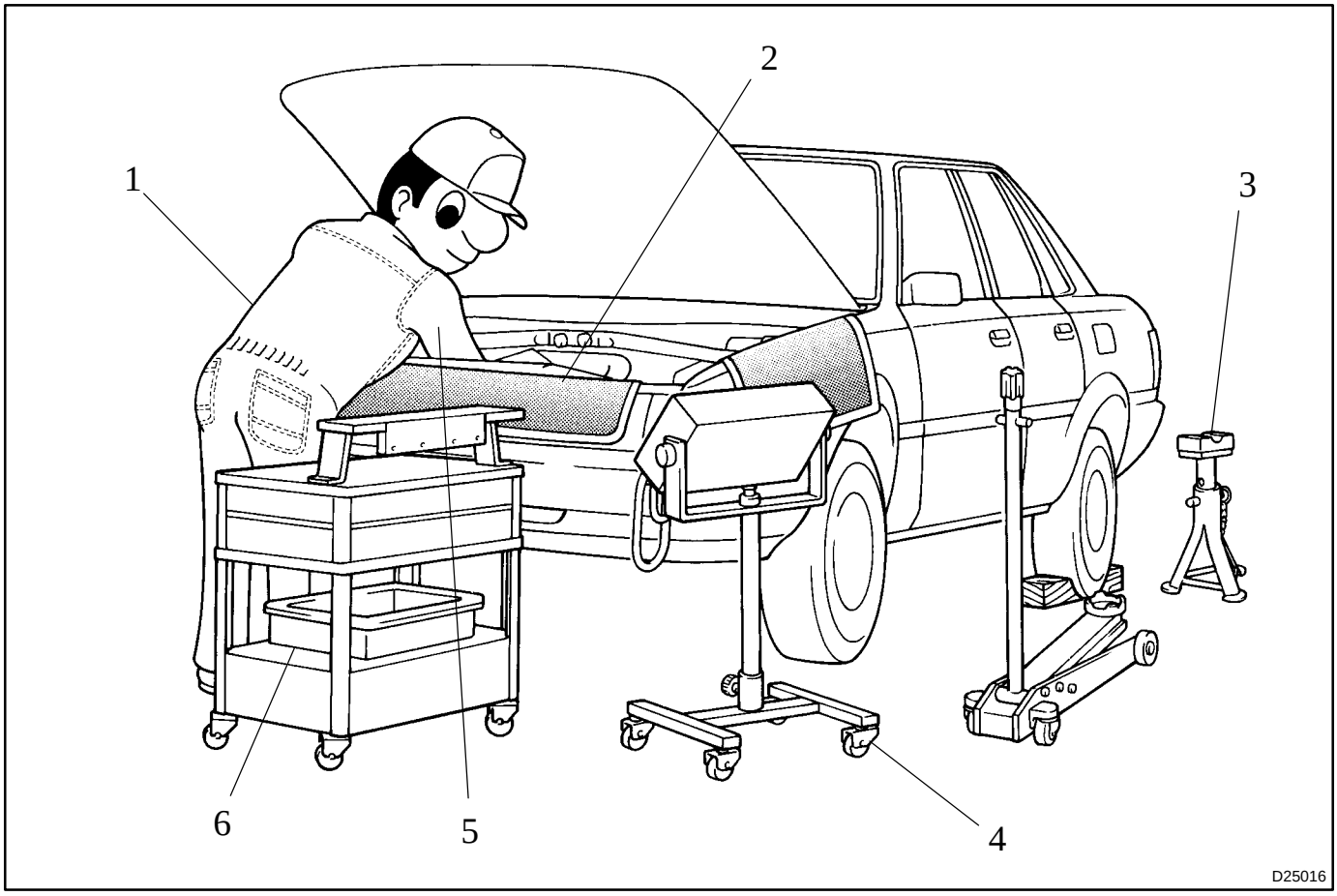

1	Looks	• Always wear a clean uniform. • Hat and safety shoes must be worn.
2	Vehicle protection	• Set a grill cover, fender cover, seat cover and floor mat before starting the operation.
3	Safe operation	• In case of working with 2 or more persons, be sure to check safety of one another. • When working with the engine running, pay attention to the ventilation of the workshop. • In case of operating on high–temperature parts, rotating, moving and vibrating parts, pay attention not to burn or injure yourself. • When jacking up the vehicle, be sure to support the specified location with a safety stand. • When lifting up the vehicle, apply a safety equipment.
4	Preparation of tools and measuring gauge	• Before starting operation, prepare a tool stand, SST, gauge, oil, shop rag and parts for replacement.
5	Removal and installation, disassembly and assembly operations	• Diagnose with a thorough understanding of the trouble phenomenon and perform effective operations. • Before removing the parts, check the assembly for general condition, deformation and damage. • When the structure is complicated, take a note or put match marks so as not to make mistakes that affect the function of the parts. • Clean and wash the removed parts if necessary, and assemble them after a thorough check.
6	Removed parts	• Place the removed parts in the correct order to avoid mixing up or making them dirty. • As for non–reusable parts such as gasket, O–ring, and self lock nut, change them to new ones following the instruction of this manual. • Sort out the parts for replacement in a box and show them to the customer.

(b) JACKING UP AND SUPPORTING VEHICLE

(1) Care must be taken when jacking up and supporting the vehicle. Be sure to lift and support the vehicle at the proper locations (See page 01–17).

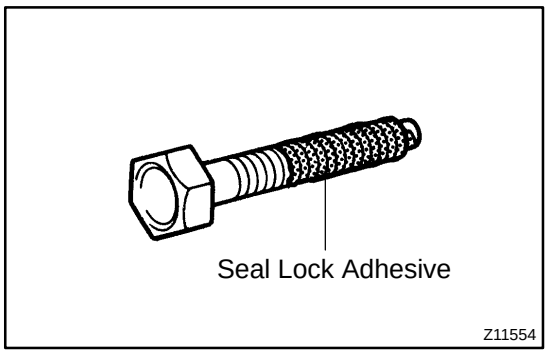

(c) PRECOATED PARTS

(1) Precoated parts are bolts, nuts, etc. that are coated with a seal lock adhesive at the factory.

(2) If a precoated part is retightened, loosened or caused to move in any way, it must be recoated with the specified adhesive.

(3) When reusing precoated parts, clean off the old adhesive and dry the part with compressed air. Then apply the specified seal lock adhesive to the bolt, nut or threads.

NOTICE:

Perform the torque checking with the lower limit value of the torque tolerance.

(4) Depending on the seal lock agent to apply, there may be a case where it is necessary to leave it for a specified time until it hardens.

(d) GASKETS

(1) When necessary, use a sealer on gaskets to prevent leaks.

(e) BOLTS, NUTS AND SCREWS

(1) Carefully observe all the specifications for tightening torques. Always use a torque wrench.

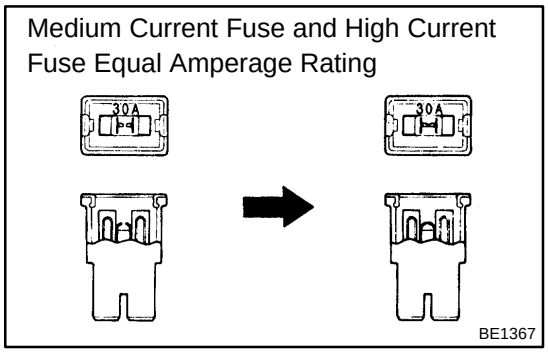

(f) Fuses.

(1) When replacing fuses, be sure that a new fuse has the correct amperage rating. DO NOT exceed the rating, or use one with a lower rating.

Illustration	Symbol	Part Name	Abbreviation
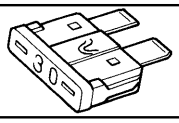 BE5594	 IN0365	FUSE	FUSE
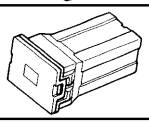 BE5595	 IN0366	MEDIUM CURRENT FUSE	M–FUSE
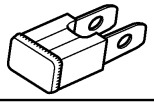 D27353	 IN0367	HIGH CURRENT FUSE	H–FUSE

V35001

(g) CLIPS

(1) The removal and installation methods of typical clips used in body parts are shown in the table below.

HINT:

If the clip is damaged during the a procedure, always replace it with a new clip.

Shape (Example)	Removal/Installation
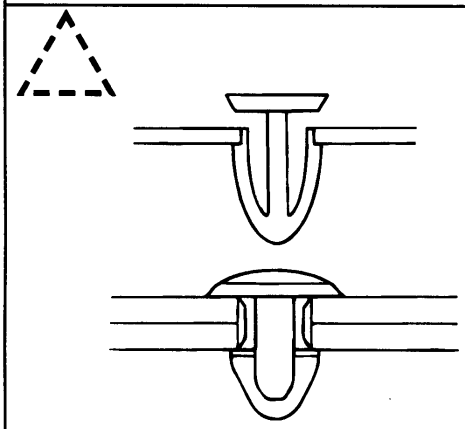	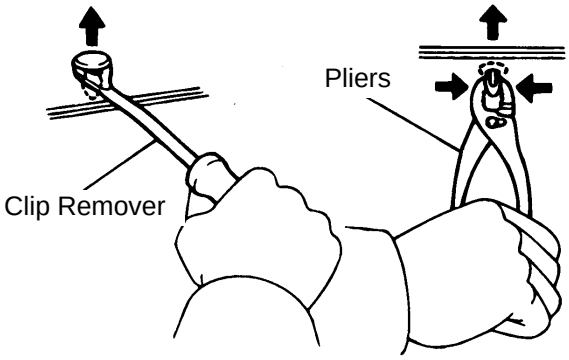
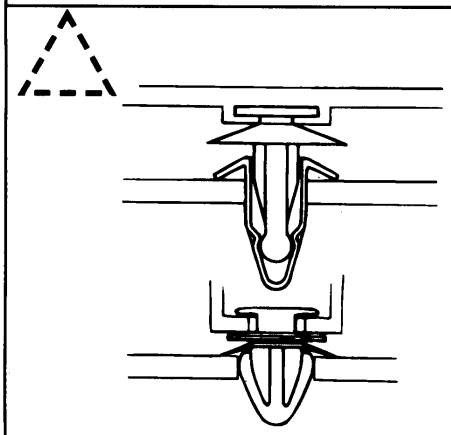	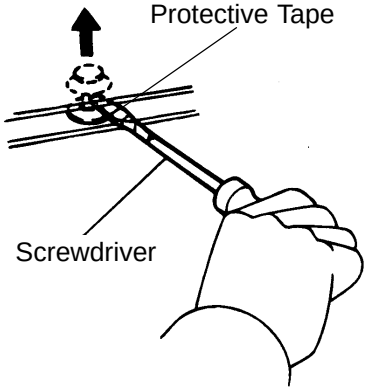
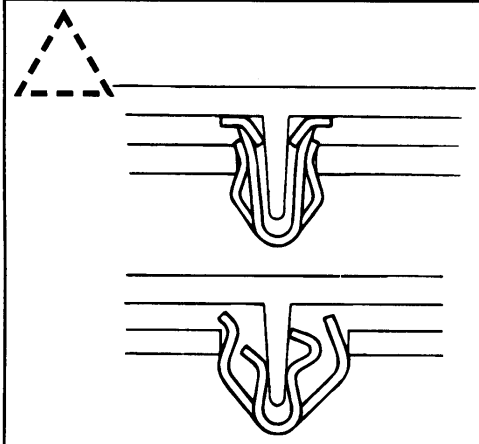	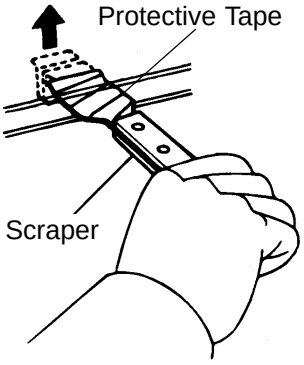

D25786

Shape (Example)	Removal/Installation
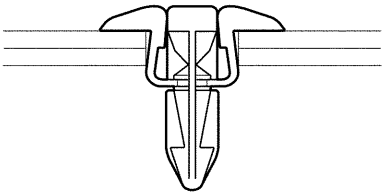	Removal Installation 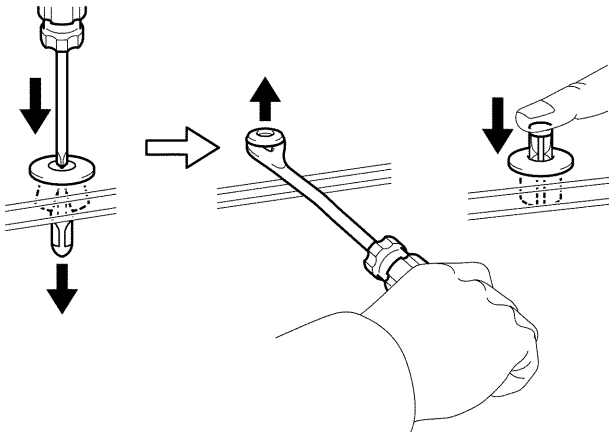
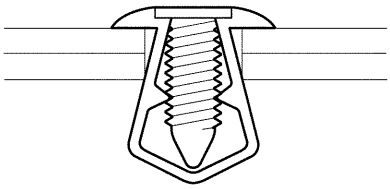	Removal Installation 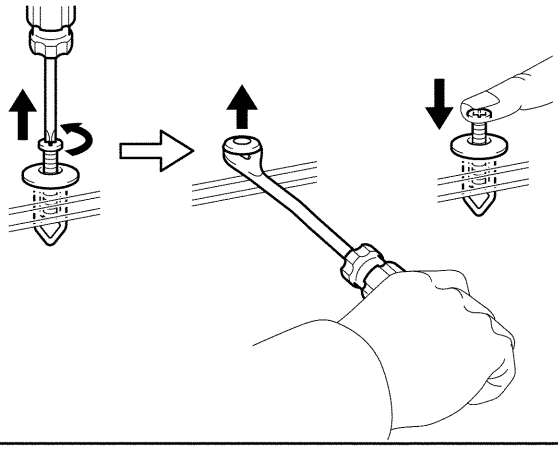
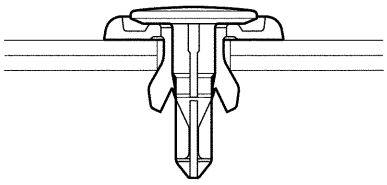	Removal Installation 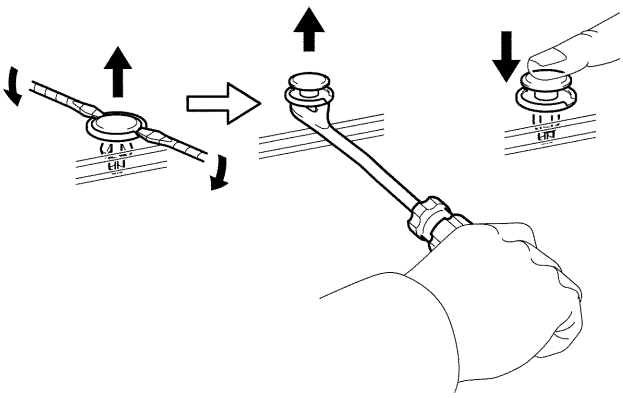

P

V35004

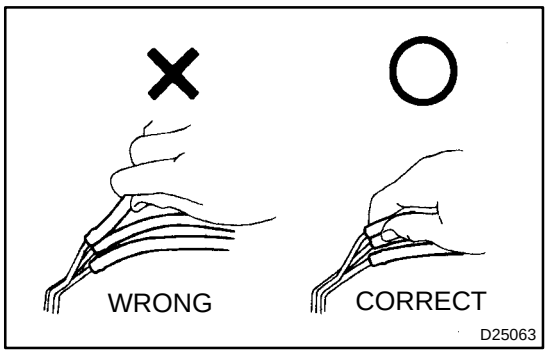

(h) REMOVAL AND INSTALLATION OF VACUUM HOSES

(1) To disconnect vacuum hoses, pull them by holding the end, not the middle of the hose.

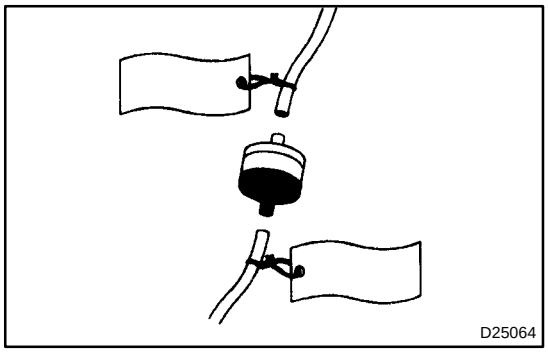

(2) When disconnecting vacuum hoses, use tags to identify where they should be reconnected.

(3) After completing the job, make a double check whether the vacuum hoses are properly connected. A label under the hood shows the proper layout.

(4) When using a vacuum gauge, never force the hose onto a connector that is too large. Use a step–down adapter for adjustment. Once the hose has been stretched, it may leak air.

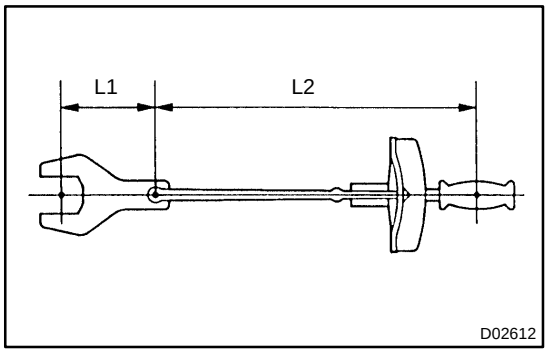

(i) TORQUE WHEN USING TORQUE WRENCH WITH EXTENSION TOOL

(1) In case of tightening with a torque wrench which has an extended length by combining the torque wrench with SST or extension tool, if you tighten until the reading of the torque wrench reaches the specified torque value, the actual torque becomes excessive.

(2) In this manual, only the specified torque is described. In case of using SST or an extension tool, calculate the reading of the torque wrench by the following formula.

(3) Formula T'=T x L2/(L1 + L2)

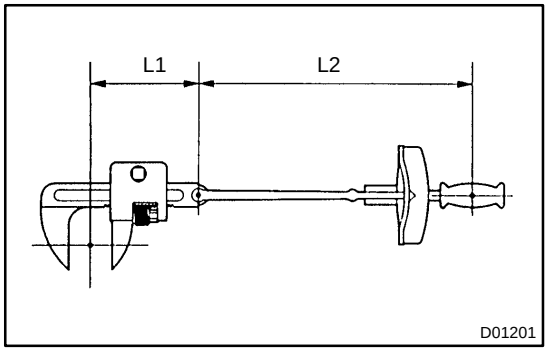

T'	Reading of torque wrench {N·m (kgf·cm, ft·lbf)}
T	Torque {N·m (kgf·cm, ft·lbf)}
L1	Length of SST or extension tool (cm)
L2	Length of torque wrench (cm)

2. FOR VEHICLES EQUIPPED WITH SRS AIRBAG AND SEAT BELT PRETENSIONER

HINT:

The vehicle is equipped with an SRS (Supplemental Restraint System), such as the horn button assembly, the instrument panel passenger airbag assembly, the front seat airbag assembly, the center airbag sensor assembly, the front airbag sensor, the side airbag sensor and the seat belt pretensioner.

Failure to carry out the service operations in the correct sequence could cause the supplemental restraint system to unexpectedly deploy during servicing. It may lead to a serious accident.

Furthermore, if a mistake is made in servicing the supplemental restraint system, it is possible that the SRS will fail to operate when required. Before servicing (including removal or installation of parts, inspection or replacement), be sure to read the following items carefully. Then follow the correct procedure described in this manual.

(a) GENERAL NOTICE

(1) Malfunction symptoms of the supplemental restraint system are difficult to confirm, so the diagnostic trouble codes become the most important source of information when troubleshooting. When troubleshooting the supplemental restraint system, always check the diagnostic trouble codes before disconnecting the battery (See page 05–424).

(2) Work must be started after 90 seconds from the time the ignition switch is turned to the ”LOCK” position and the negative (–) terminal cable is disconnected from the battery.
(The supplemental restraint system is equipped with a back–up power source, so, if work is started within 90 seconds after disconnecting the negative (–) terminal cable from the battery, the SRS may deploy.)
When the negative (–) terminal cable is disconnected from the battery, memory of the clock and audio systems will be cancelled. So, before starting work, make a record of the memorized contents in each memory system. Then, when work is finished, reset the clock and audio systems as before. To avoid erasing the memory in each memory system, never use a back–up power supply from another battery.

(3) Even in case of a minor collision where the SRS does not deploy, the horn button assembly, the instrument panel passenger airbag assembly, the front seat airbag assembly and the seat belt pretensioner should be inspected (See pages 60–14, 60–26, 60–32 and 61–9).

(4) Never use SRS related parts from another vehicle. When replacing parts, replace them with new parts.

(5) Before repairs, remove the airbag sensor if shocks are likely to be applied to the sensor during repairs.

(6) Never disassemble and repair the airbag sensor assembly, the horn button assembly, the instrument panel passenger airbag assembly, the front seat airbag assembly or the seat belt pretensioner.

(7) If the airbag sensor assembly, the side airbag sensor assembly, the horn button assembly, the instrument panel passenger airbag assembly, the front seat airbag assembly or the seat belt pretensioner have been dropped, or if there are cracks, dents or other defects in the case, bracket or connector, replace them with new ones.

(8) Do not directly expose the airbag sensor assembly, the horn button assembly, the instrument panel passenger airbag assembly, the front seat airbag assembly or the seat belt pretensioner to hot air or flames.

(9) Use a volt/ohmmeter with high impedance (10 kΩ/V minimum) for troubleshooting of an electrical circuit.

(10) Information labels are attached to the SRS components. Follow the instructions on the notices.

(11) After work on the supplemental restraint system is completed, check the SRS warning light (See page 05–424).

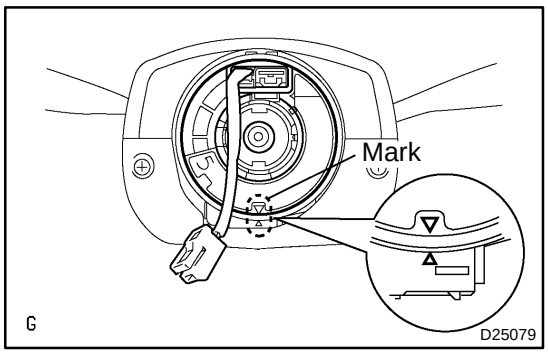

(b) SPIRAL CABLE (in Combination Switch)

(1) The steering wheel must be fitted correctly to the steering column with the spiral cable at the neutral position, otherwise cable disconnection and other troubles may occur. Refer to page 60–22 on this manual concerning the correct installation of the steering wheel.

(c) HORN BUTTON ASSEMBLY (with Airbag)

(1) When removing the horn button assembly or handling a new horn button, it should be placed with the pad top surface facing upward. Placing it with the pad surface facing downward may lead to a serious accident if the airbag accidentally inflates. Also, do not place the horn button on top of one another.

(2) Never measure the resistance of the airbag squib (This may cause the airbag to inflate, which is very dangerous).

(3) Grease should not be applied to the horn button assembly, and the pad should not be cleaned with detergents of any kinds.

(4) Store the horn button assembly where the ambient temperature remains below 93˚C (200˚F), without high humidity and away from electrical noise.

(5) When using electric welding, first disconnect the airbag connector (4 yellow pins) under the steering column near the combination switch connector before starting work.

(6) When disposing of the vehicle or the horn button assembly alone, the airbag should be deployed using an SST before disposal (See page 60–14).
Perform the operation in a safe place away from electrical noise.

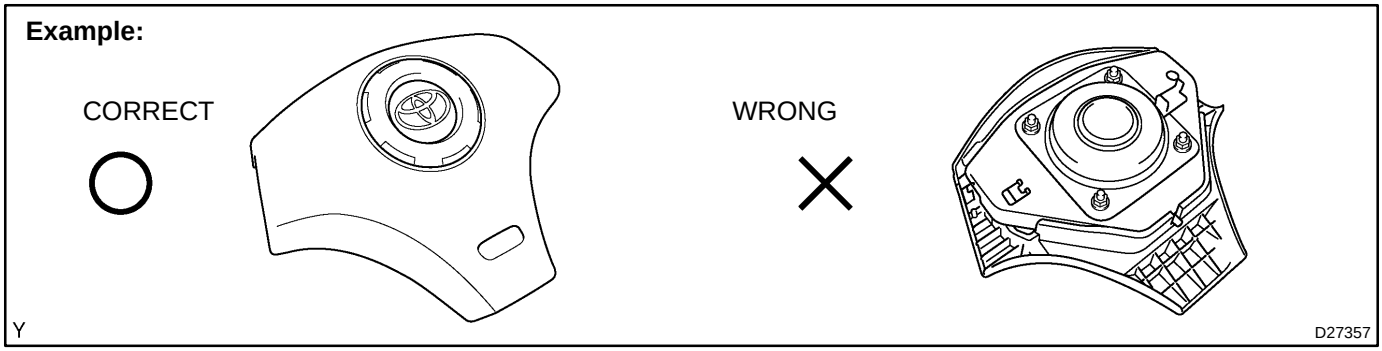

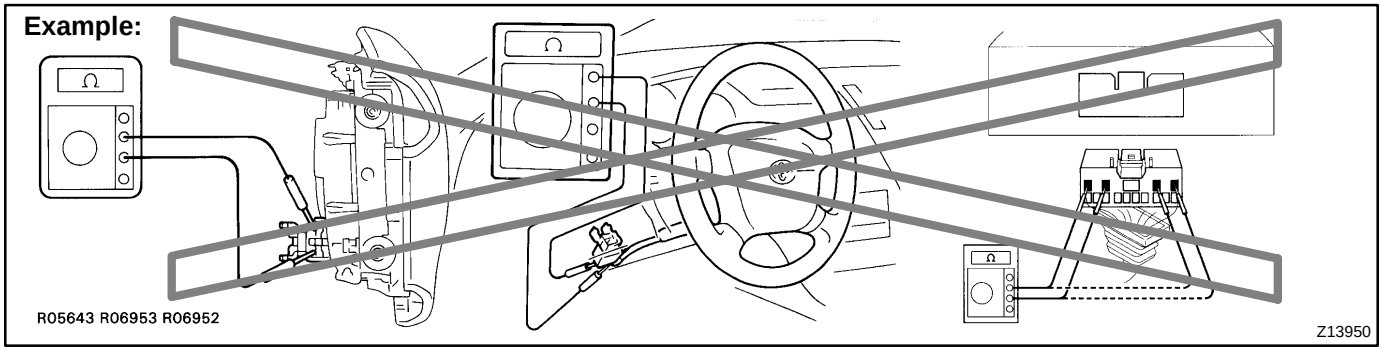

(d) INSTRUMENT PANEL PASSENGER AIRBAG ASSEMBLY

(1) Always store a removed or new instrument panel passenger airbag assembly with the airbag inflation direction facing upward. Placing the airbag assembly with the airbag inflation direction facing downward could cause a serious accident if the airbag inflates.

(2) Never measure the resistance of the airbag squib (This may cause the airbag to inflate, which is very dangerous).

(3) Grease should not be applied to the instrument panel passenger airbag assembly, and the airbag door should not be cleaned with detergents of any kind.

(4) Store the airbag assembly where the ambient temperature remains below 93˚C (200˚F), without high humidity and away from electrical noise.

(5) When using electric welding, first disconnect the airbag connector (4 yellow pins) installed on the assembly before starting work.

(6) When disposing of a vehicle or the airbag assembly alone, the airbag should be deployed using an SST before disposal (See page 60–26).
Perform the operation in a safe place away from electrical noise.

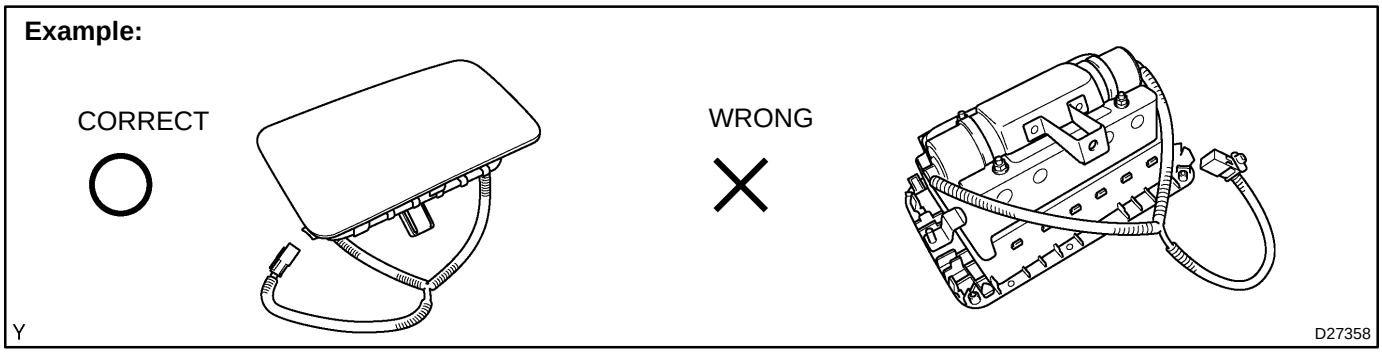

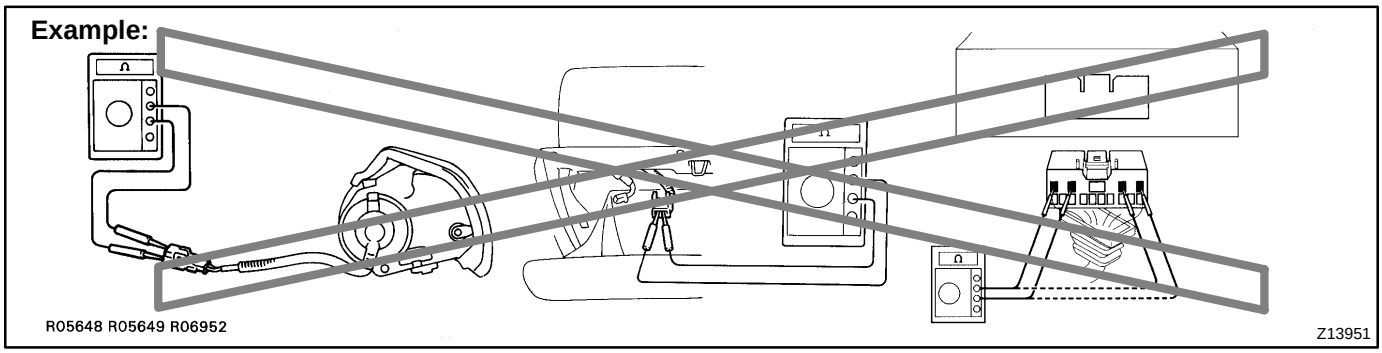

(e) FRONT SEAT AIRBAG ASSEMBLY

(1) Always store a removed or new front seat airbag assembly with the airbag inflation direction facing upward. Placing the airbag assembly with the airbag inflation direction facing downward could cause a serious accident if the airbag inflates.

(2) Never measure the resistance of the airbag squib (This may cause the airbag to inflate, which is very dangerous).

(3) Grease should not be applied to the front seat airbag assembly, and the airbag door should not be cleaned with detergents of any kind.

(4) Store the airbag assembly where the ambient temperature remains below 93˚C (200˚F), without high humidity and away from electrical noise.

(5) When using electric welding, first disconnect the airbag connector (2 yellow pins) installed on the assembly before starting work.

(6) When disposing of a vehicle or the side airbag assembly alone, the airbag should be deployed using an SST before disposal (See page 60–32).
Perform the operation in a safe place away from electrical noise.

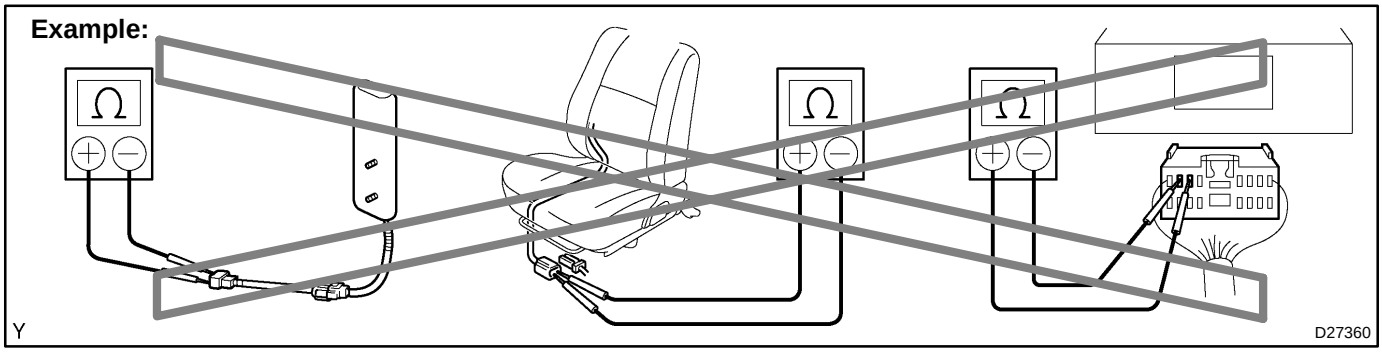

(f) SEAT BELT PRETENSIONER

(1) Never measure the resistance of the seat belt pretensioner (This may cause the seat belt pretensioner to activate, which is very dangerous).
(2) Never disassemble the seat belt pretensioner.
(3) Never install the seat belt pretensioner to another vehicle.
(4) Store the seat belt pretensioner where the ambient temperature remains below 80°C (176°F) without high humidity and away from electrical noise.
(5) When using electric welding, first disconnect the connector (2 yellow pins) before starting work.
(6) When disposing of a vehicle or the seat belt pretensioner alone, the seat belt pretensioner should be activated before disposal (See page 61–9). Perform the operation in a safe place away from electrical noise.
(7) The seat belt pretensioner is hot after activation, so let it cool down sufficiently before disposal. Never apply water to cool down the seat belt pretensioner.
(8) Oil or water should not be put on the front seat outer belt, and the front seat outer belt should not be cleaned with detergents of any kind.

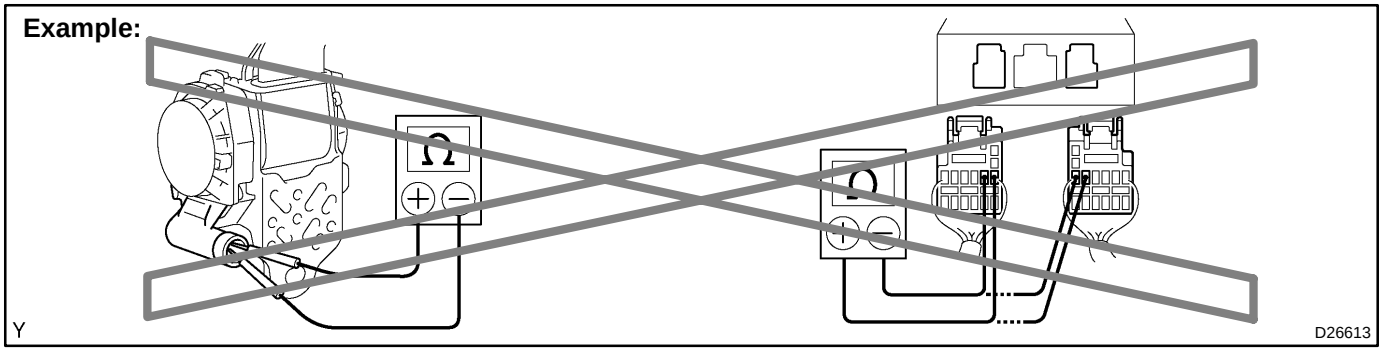

(g) AIRBAG SENSOR ASSEMBLY

(1) Never reuse the airbag sensor assembly involved in a collision where the SRS has deployed.
(2) The connectors to the airbag sensor assembly should be connected or disconnected with the sensor mounted on the floor. If the connectors are connected or disconnected while the airbag sensor assembly is not mounted to the floor, it could cause an undesired ignition of the supplemental restraint system.
(3) Work must be started after 90 seconds from the time the ignition switch is turned to the ”LOCK” position and the negative (–) terminal cable is disconnected from the battery, even if only loosening the set bolts of the airbag sensor assembly.

(h) WIRE HARNESS AND CONNECTOR

(1) The SRS wire harness is integrated with the instrument panel wire harness assembly. All the connectors in the system are in a standard yellow color. If the SRS wire harness becomes disconnected or the connector becomes broken due to an accident, etc., repair or replace it.

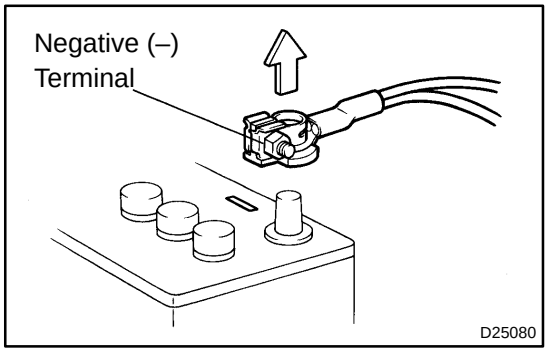

3. ELECTRONIC CONTROL

(a) REMOVAL AND INSTALLATION OF BATTERY TERMINAL

(1) Before performing electrical work, disconnect the battery negative (–) terminal cable beforehand so as to prevent burnt–out damage by short.

(2) When disconnecting and installing the terminal cable, turn the ignition switch and lighting switch OFF, and loosen the terminal nut completely. Perform these operations without twisting or prying the terminal.

(3) When the battery terminal is removed, all the memories of the clock, radio, DTCs, etc. will be erased. So before removing it, check them and note them down.

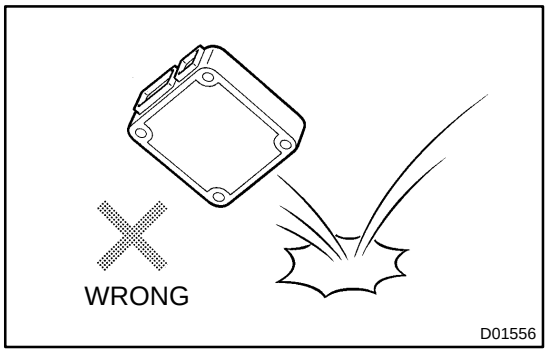

(b) HANDLING OF ELECTRONIC PARTS

(1) Do not open the cover or case of the ECU unless absolutely necessary (If the IC terminals are touched, the IC may be destroyed by static electricity).

(2) To disconnect electronic connectors, pull the connector itself, not the wires.

(3) Be careful not to drop electronic components, such as sensors or relays. If they are dropped on a hard floor, they should be replaced and not be reused.

(4) When cleaning the engine with steam, protect the electronic components, air filter and emission–related components from water.

(5) Never use an impact wrench to remove or install temperature switches or temperature sensors.

(6) When checking the continuity at the wire connector, insert the tester probe carefully to prevent terminals from bending.

4. REMOVAL AND INSTALLATION OF FUEL CONTROL PARTS

(a) PLACE FOR REMOVING AND INSTALLING OF FUEL SYSTEM PARTS

(1) Work in a place with good air ventilation and without anything flammable such as welder, grinder, drill, electric motor or stove in the surroundings.

(2) Never work in a place such as a pit or nearby a pit, as there is a possibility that vaporized fuel is filled in those places.

(b) REMOVING AND INSTALLING OF FUEL SYSTEM PARTS

(1) Prepare a fire extinguisher before starting the operation.

(2) For prevention of static electricity, install a ground on the fuel changer, vehicle and fuel tank, and do not spray much water so as to prevent slipping.

(3) Never use any electric equipment like an electric motor or a working light, as they may cause sparks or high temperature.
(4) Never use an iron hammer, as it may cause sparks.
(5) Dispose of the shop rag separately from any fuel deposit.

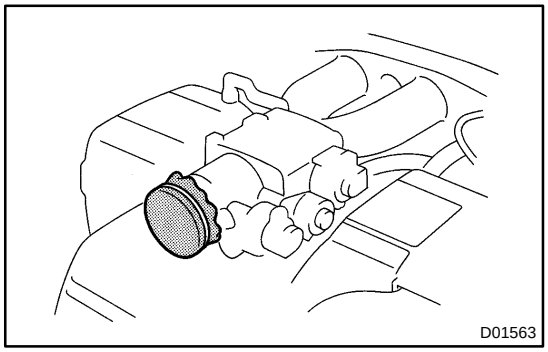

5. REMOVAL AND INSTALLATION OF ENGINE INTAKE PARTS

(a) If any metal tip is mixed in the inlet pass, this may give a bad effect to the engine and turbocharger.
(b) When removing and installing the inlet system parts, close the opening of the removed inlet system parts and the engine with a clean shop rag or gummed tape.
(c) When installing the inlet system parts, check that there is no mixing of a metal tip.

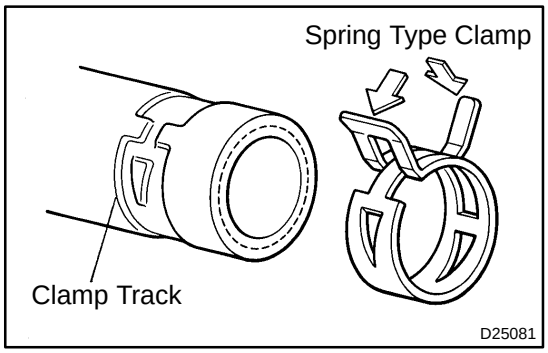

6. HANDLING OF HOSE CLAMPS

(a) Before removing the hose, check the depth of the inserting portion and the clamp position in order to restore it surely.
(b) Change a deformed or dented clamp for a new one.
(c) In case of reusing the hose, install the clamp on the hose where it has a clamp track.
(d) For a spring type clamp, adjust it by adding force to the arrow mark direction after the installation.

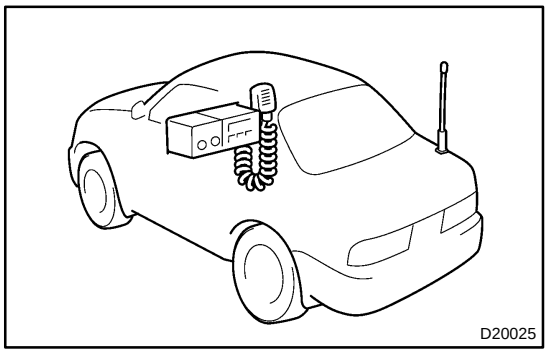

7. FOR VEHICLES EQUIPPED WITH MOBILE COMMUNICATION SYSTEM

(a) Install an antenna as far as possible away from the ECU and sensors of the vehicle's electronic systems.
(b) Install an antenna feeder at least 20 cm (7.87 in.) away from the ECU and sensors of the vehicle's electronic systems. For details of the ECU and sensors locations, refer to the section on the applicable component.
(c) Prevent the antenna feeder from getting entangled with the other wirings, and keep the antenna feeder separately from the other wirings as much as possible.
(d) Check that the antenna and feeder are correctly adjusted.
(e) Do not install any powerful mobile communication system.

8. FOR VEHICLES EQUIPPED WITH CATALYTIC CONVERTER

CAUTION:

If large amount of unburned fuel flows into the converter, it may cause overheating and a fire hazard. To prevent this, observe the following precautions.

(a) Use only unleaded gasoline.

(b) Avoid prolonged idling.
Avoid running the engine at idle speed for more than 20 minutes.

(c) Avoid a spark jump test.
   (1) Perform a spark jump test only when absolutely necessary. Perform this test as rapidly as possible.
   (2) While testing, never race the engine.

(d) Avoid a prolonged engine compression measurement.
Engine compression measurements must be performed as rapidly as possible.

(e) Do not run the engine when the fuel tank is nearly empty. This may cause the engine to misfire and create an extra load on the converter.

01035–10

HOW TO PROCEED WITH TROUBLESHOOTING

HINT:

Carry out troubleshooting in accordance with the procedures on the following page. Here, only the basic procedures are shown. Details are provided in the Diagnostics Section, showing the most effective methods for each circuit. Confirm the troubleshooting procedures first for the relevant circuit before beginning troubleshooting of that circuit.

1	Vehicle brought to workshop

2	Customer problem analysis

(a) Ask the customer about the conditions and environment when the problem occurred.

3	Symptom confirmation and DTC (and freeze frame data) check

(a) Check the battery positive voltage.
Voltage: 11 – 14 V (Engine stopped)

(b) Visually check the wire harness, connectors and fuses for open and short, etc.

(c) Warm up the engine to the normal operating temperature.

(d) Confirm the problem symptoms and conditions, and check for DTCs according to the related chart.

OK → **Go to step 5**

NG

4	DTC chart

(a) Check the results obtained in step 3, then confirm the inspection procedures for the system or the part which should be checked using the DTC chart.

→ **Go to step 6**

5	Problem symptoms chart

(a) Check the results obtained in step 3, then confirm the inspection procedures for the system or the part which should be checked using the problem symptoms table.

6	Circuit inspection or parts inspection

(a) Confirm the circuit for the system or the part which should be checked using the problem symptoms table or the results obtained in step 4.

7	Repair

(a) Repair the affected system or part in accordance with the instructions in step 6.

8	Confirmation test

(a) After completing repairs, confirm that the problem has been solved (If the problem does not recur, perform a confirmation test under the same conditions and in the same environment as when it occurred for the first time).

END

CUSTOMER PROBLEM ANALYSIS

HINT:

- In troubleshooting, the problem symptoms must be confirmed accurately, meaning that all preconceptions must be set aside in order to make an accurate judgement. To ascertain what the problem symptoms are, it is extremely important to ask the customer about the problem and conditions when it occurred.
- The following 5 items are important points in the problem analysis. Past problems which are thought to be unrelated and the repair history, etc. may also help in some cases. Therefore, as much information as possible should be gathered and its relationship with the problem symptoms should be correctly ascertained for use as reference in troubleshooting. A customer problem analysis table is provided for your use in the Diagnostics Section for each system.

Important Points with Customer Problem Analysis

- What ——— Vehicle model, system name
- When ——— Date, time, occurrence frequency
- Where ——— Road conditions
- Under what conditions? ——— Running conditions, driving conditions, weather conditions
- How did it happen? ——— Problem symptoms

(Sample) Supplemental restraint system check sheet.

CUSTOMER PROBLEM ANALYSIS CHECK

Supplemental Restraint System Check Sheet

Inspector's Name _____

Customer's Name		**VIN**	
		Production Date	/ /
		Licence No.	
Date Vehicle Brought In	/ /	**Odometer Reading**	**km miles**

Date Problem First Occurred	/ /
Weather	☐ Fine ☐ Cloudy ☐ Rainy ☐ Snowy ☐ Other
Temperature	**Approx.**

Vehicle Operation	☐ Starting ☐ Idling ☐ Driving [☐ Constant speed ☐ Acceleration ☐ Deceleration ☐ Other]

SYMPTOM CONFIRMATION AND DIAGNOSTIC TROUBLE CODE

HINT:

- The diagnostic system in COROLLA has various functions. The first function is the Diagnostic Trouble Code (DTC) Check, in which a malfunction in the signal circuits to the ECU is stored in code form in the ECU memory. Another function is the Input Signal Check, which checks if the signals from various switches are sent to the ECU correctly. By using these check functions, it is possible to quickly narrow down potential problem areas and troubleshooting can be performed effectively. The diagnostic functions are incorporated in the following systems in the COROLLA.

System	Diagnostic Trouble Code Check	Input Signal Check (Sensor Check)	Diagnostic Test Mode (Active Test)
SFI System	○ (with Check Mode)	○	○
ABS with EBD System	○	○	
Electronic Controlled Automatic Transaxle [ECT]	○ (with Check Mode)	○	
Supplemental Restraint System	○		
Cruise Control System		○	

- In the DTC check, it is very important to determine whether the problem indicated by the DTC is still occurring or has occurred in the past but returned to normal at present. In addition during the problem symptom check, it a check must be made on whether the malfunction indicated by the DTC is directly related to the problem symptom or not. For this reason, the DTC should be checked before and after symptom confirmation to determine the current conditions. If this is not done, it may, depending on the case, result in unnecessary troubleshooting for systems that are operating normally. This would make more difficult to detect the problem area or to try to repair irrelevant areas. Therefore, always follow the procedures in the correct order and perform the DTC check.
- A flow chart showing how to proceed with troubleshooting using the diagnostic trouble code (DTC) check is shown the this page. This flow chart shows how to utilize the DTC check effectively. Then, by carefully checking the results, this chart indicates how to proceed either to the DTC troubleshooting or to the troubleshooting of the problem symptoms table.

1 DTC check

2 Making a note and clear the DTCs

3 Symptom confirmation

○	Problem symptoms exist
○	No problem symptoms exist

a → **Go to step 5**

b

4 Simulation test using the symptom simulation methods

5 DTC check

	DTC displayed
	Normal code displayed

a → **Troubleshooting of problem indicated by DTC**

b

6 Symptom confirmation

	No problem symptoms exist
	Problem symptoms exist

If a DTC is displayed in the initial DTC check, it indicates that a trouble may have occurred in a wire harness or connector in that circuit in the past, therefore check the wire harness and connectors (See page 01–30).

a → **System normal**

b

Troubleshooting of each problem symptom

The problem is still occurring in a place other than the diagnostic circuit (The DTC displayed first is either for a past problem or it is a secondary problem).

SYMPTOM SIMULATION

HINT:

The most difficult case in troubleshooting is when no symptoms occurs. In such cases, a thorough customer problem analysis must be carried out. Then the same or similar conditions and environment in which the problem occurred in the customer's vehicle should be simulated. No matter how much experience a technician has, or how skilled he may be, if he proceeds to troubleshoot without confirming the problem symptoms, he will tend to overlook something important in the repair operation and make a wrong guess somewhere, which will only lead to a standstill. For example, for a problem which only occurs when the engine is cold, or for a problem which occurs due to vibration caused by the road during driving, etc., the problem can never be determined when the engine is hot or when the vehicles is at a standstill. Since vibration, heat or water penetration (moisture) is a likely cause for the problem which is difficult to reproduce, the symptom simulation tests introduced here are effective measures in a point that the external causes are applied to the vehicle in a stationary condition.

Important points in the symptom simulation test:

In the symptom simulation test, the problem symptoms should be confirmed, and the problem area or parts must also be discovered. To do so, reduce the possible problem circuits according to the symptoms before starting this type of test and have the hand–held tester connected beforehand. After that, carry out the symptom simulation test, judging whether the circuit being tested is defective or normal and also confirming the problem symptoms at the same time. Refer to the problem symptoms table of each system to narrow down the possible causes of the symptom.

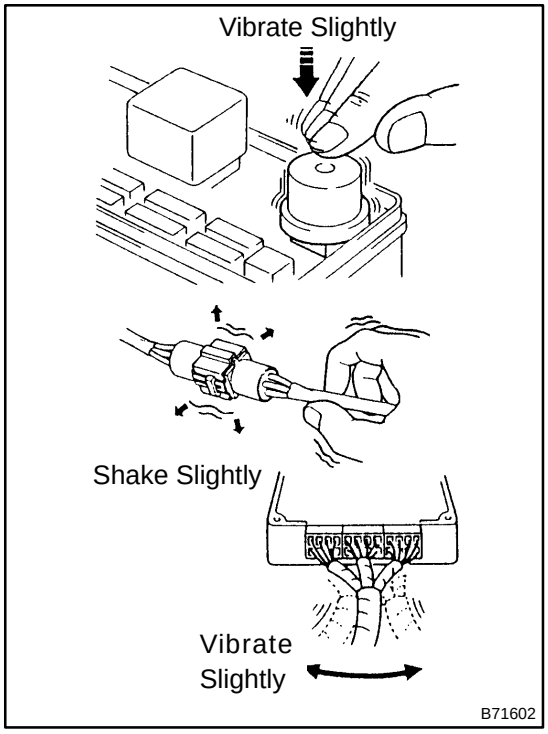

1. VIBRATION METHOD: When vibration seems to be the major cause.

(a) PART AND SENSOR

(1) Apply slight vibration with your finger to the part of the sensor considered to be the problem cause and check whether the malfunction occurs.

HINT:

Applying strong vibration to relays may result in open relays.

(b) CONNECTORS

(1) Slightly shake the connector vertically and horizontally.

(c) WIRE HARNESS

(1) Slightly shake the wire harness vertically and horizontally.

The connector joint and fulcrum of the vibration are the major areas that should be checked thoroughly.

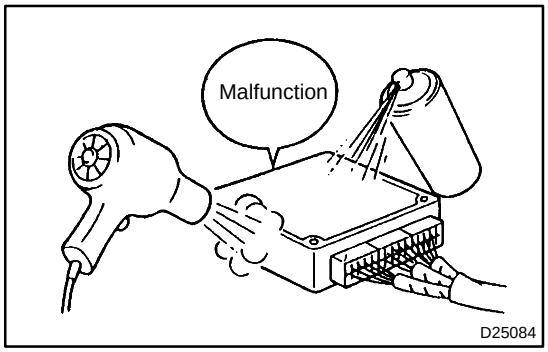

2. HEAT METHOD: If the problem seems to occur when the area in question is heated.

(a) Heat the component that is the possible cause of the malfunction with a hair dryer or similar object. Check if the malfunction occurs.

NOTICE:

- **Do not heat the components to more than 60°C (140°F) (Temperature is limited to keep the components from being damaged).**

- **Do not apply heat directly to the parts in the ECU.**

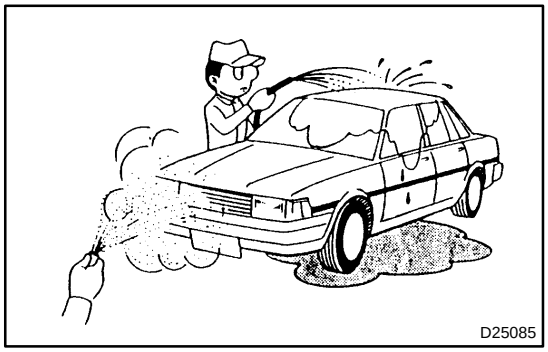

3. WATER SPRINKLING METHOD: When the malfunction seems to occur on a rainy day or in high–humidity.

(a) Sprinkle water onto the vehicle and check if the malfunction occurs.

NOTICE:

- **Never sprinkle water directly onto the engine compartment, but indirectly change the temperature and humidity by spraying a mist of water onto the radiator front surface.**
- **Never apply water directly onto the electronic components.**

HINT:

If a vehicle is subject to water leakage, the leaking water may contaminate the ECU. When testing a vehicle with a water leakage problem, this factor must also be considered.

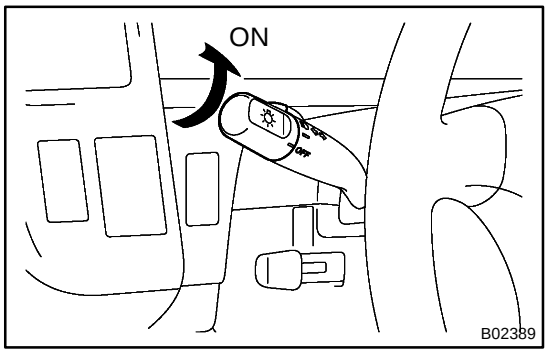

4. OTHERS: If the malfunction seems to occur when electrical load is excessive.

(a) Turn on all the electrical equipment including the heater blower, headlights, rear window defogger, etc., and check if the malfunction occurs.

DIAGNOSTIC TROUBLE CODE CHART

The inspection procedures are shown in the table below. This table allows efficient and accurate troubleshooting using the diagnostic trouble codes displayed in the diagnostic trouble code chart. Proceed with troubleshooting in accordance with the inspection procedures listed in the diagnostic chart corresponding to the diagnostic trouble codes displayed. The diagnostic trouble code chart for the Supplemental Restraint System is shown below as an example.

- DTC No.
  Indicates the diagnostic trouble code.
- Page or Instructions
  Indicates the page where the inspection procedures for each circuit is to be found, or gives instructions for checking and repairs.

- Trouble Area
  Indicates the suspect areas of the problem.

- Detection Item
  Indicates the system or details of the problem.

DIAGNOSTIC TROUBLE CODE CHART

If a malfunction code is displayed during the DTC check, check the circuit for that code listed in the table below (Proceed to the page given for that circuit).

DTC No. (See page)	Detection Item	Trouble Area	SRS Warning Light
B0100/13 (05–119)	● Short in D squib circuit	● Steering wheel pad (squib) ● Spiral cable ● Airbag sensor assembly ● Wire harness	ON
B0101/14 (05–124)	● Open in D squib circuit	● Steering wheel pad (squib) ● Spiral cable ● Airbag sensor assembly ● Wire harness	ON
B0102/11 (05–128)	● Short in D squib circuit (to ground)	● Steering wheel pad (squib) ● Spiral cable ● Airbag sensor assembly ● Wire harness	ON
B0103/12 (05–132)	● Short in D squib circuit (to B+)	● Steering wheel pad (squib) ● Spiral cable ● Airbag sensor assembly ● Wire harness	ON
B0105/53 (05–136)	● Short in P squib circuit	● Front passenger airbag assembly (squib) ● Airbag sensor assembly ● Wire harness	ON
B0106/54	● Open in P squib circuit	● Front passenger airbag assembly (squib) ● Airbag sensor assembly ● Wire harness	
	b circuit (to Ground)	● Front passenger airbag assembly (squib) ● Airbag sensor assembly ● Wire harness	

PROBLEM SYMPTOMS TABLE

The suspected circuits or parts for each problem symptom are shown in the table below. Use this table to troubleshoot the problem when a Normal code is displayed in the diagnostic trouble code chart but the problem is still occurring. Numbers in the table indicate the order in which the circuits or parts should be checked.
HINT:
When the problem is not detected by the diagnostic system even though the problem symptom is present, it may be that the problem is occurring outside the detection range of the diagnostic system.

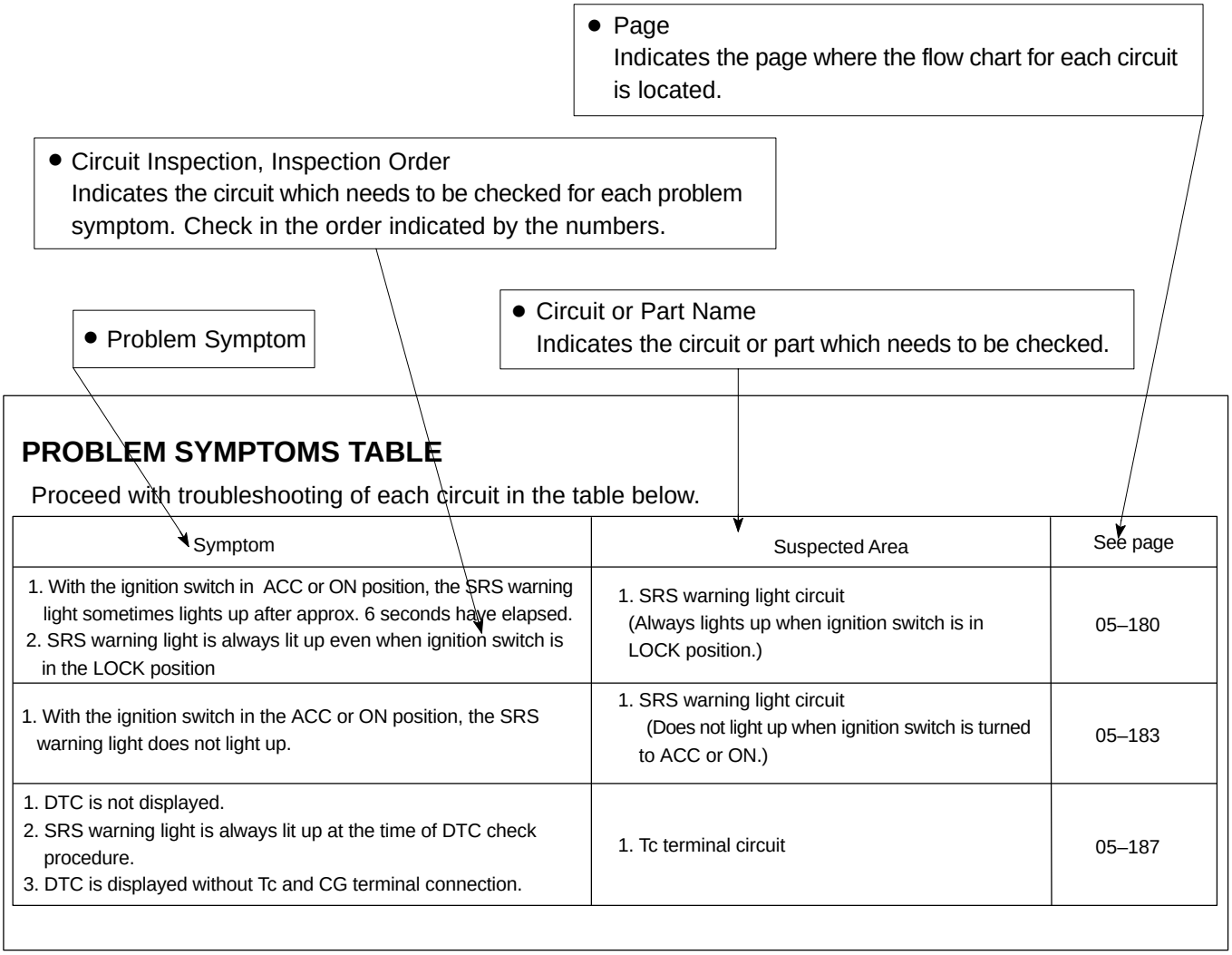

PROBLEM SYMPTOMS TABLE

Proceed with troubleshooting of each circuit in the table below.

Symptom	Suspected Area	See page
1. With the ignition switch in ACC or ON position, the SRS warning light sometimes lights up after approx. 6 seconds have elapsed. 2. SRS warning light is always lit up even when ignition switch is in the LOCK position	1. SRS warning light circuit (Always lights up when ignition switch is in LOCK position.)	05–180
1. With the ignition switch in the ACC or ON position, the SRS warning light does not light up.	1. SRS warning light circuit (Does not light up when ignition switch is turned to ACC or ON.)	05–183
1. DTC is not displayed. 2. SRS warning light is always lit up at the time of DTC check procedure. 3. DTC is displayed without Tc and CG terminal connection.	1. Tc terminal circuit	05–187

CIRCUIT INSPECTION

How to read and use each page is shown below.

● Circuit Description
The major role and, operation of the circuit and its component parts are explained.

● Diagnostic Trouble Code No. and Detection Item

● Indicates the diagnostic trouble codes, diagnostic trouble code settings and suspect areas for a problem.

● Inspection Procedures
Use the inspection procedures to determine if the circuit is normal or abnormal. If it is abnormal, use it to determine whether the problem is located in the sensors, actuators, wire harness or ECU.

DTC P0500/42 VEHICLE SPEED SENSOR MALFUNCTION

CIRCUIT DESCRIPTION

The vehicle speed sensor outputs a 4–pulse signal for every revolution of the rotor shaft, which is rotated by the transmission output shaft via the driven gear. After this signal is converted into a more precise rectangular waveform by the waveform shaping circuit inside the combination meter, it is then transmitted to the Engine ECU. The Engine ECU determines the vehicle speed based on the frequency of these pulse signals

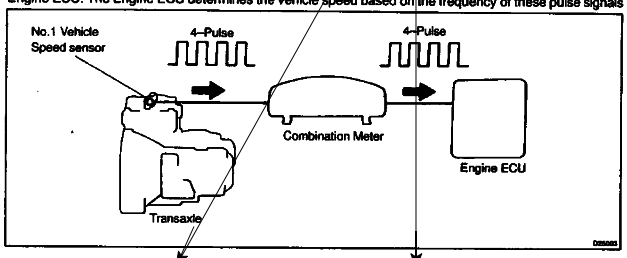

DTC No.	DTC Detecting Condition	Trouble Area
P0500/42	During vehicle is being driven, no vehicle speed sensor signal to engine ECU (2 trip detection logic)	• Combination meter • Open or short in No.1 vehicle speed sensor circuit • No.1 vehicle speed sensor • Engine ECU

WIRING DIAGRAM

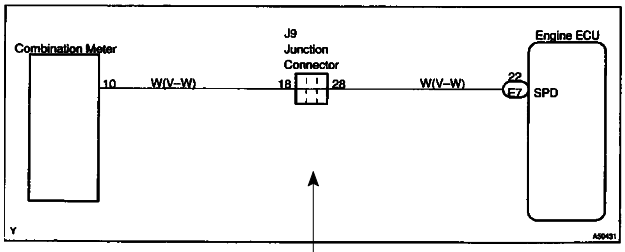

● Wiring Diagram
This shows a wiring diagram of the circuit.
Use this diagram together with ELECTRICAL WIRING DIAGRAM to thoroughly understand the circuit.
Wire colors are indicated by an alphabetical code.
B = Black, L = Blue, R = Red, BR = Brown,
LG = Light Green, V = Violet, G = Green,
O = Orange, W = White, GR = Gray, P = Pink,
Y = Yellow, SB = Sky Blue
The first letter indicates the basic wire color and the second letter indicates the color of the stripe.

INSPECTION PROCEDURE

1 READ VALUE OF VEHICLE SPEED VALUE(SPEEDOMETER OPERATION)

(a) Select data monitor on the hand–held tester.
(b) Perform a test drive of the vehicle.
(c) Read the vehicle speed on the hand–held tester.
RESULT: The same as the speed displayed on the speed meter.

NG → **REPLACE COMBINATION METER ASSY**

OK

2 INSPECT ECU

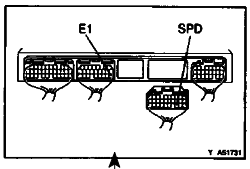

(a) Check the output waveform.
HINT:
Using the oscilloscope function of hand–held tester, it is possible to check the function between the engine ECU and the knock control sensor. The waveform shown in the illustration is an example without noise and chattering.
(1) Connect the hand–held tester between the terminals SPD of the engine ECU E7 connector and E1 of the engine ECU E8 connector.
(2) Select the oscilloscope function on the hand–held tester. (Refer to the hand–held tester's instruction book for operating instructions.)
RESULT: Voltage is intermittently generated

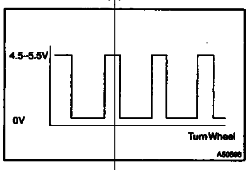

ITEM	CONTENTS
TERMINAL	SPD⇔E1
EQUIPMENT SET	5V/DIV, 20ms/DIV
CONDITION	Running at 20 km/h

HINT:
• The multitude gets shorter as the engine speed becomes faster.

OK → **CHECK AND REPLACE ECU**

NG

● Indicates the condition of the connector of the ECU during the check.

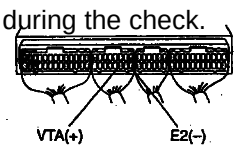

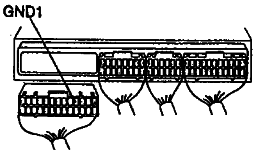

Connector being checked is connected.

Connections of tester are indicated by (+), (–) after terminals name.

Connector being checked is disconnected.

For inspection of connector with body ground, there is nothing about the body ground written down.

D25842

010DA–02

GLOSSARY OF SAE AND TOYOTA TERMS

This glossary lists all SAE–J1930 terms and abbreviations used in this manual in compliance with SAE recommendations, as well as their TOYOTA equivalents.

SAE ABBREVIATIONS	SAE TERMS	TOYOTA TERMS ( )—ABBREVIATIONS
A/C	Air Conditioning	Air Conditioner
ACL	Air Cleaner	Air Cleaner, A/CL
AIR	Secondary Air Injection	Air Injection (AI)
AP	Accelerator Pedal	–
B+	Battery Positive Voltage	+B, Battery Voltage
BARO	Barometric Pressure	HAC
CAC	Charge Air Cooler	Intercooler
CARB	Carburetor	Carburetor
CFI	Continuous Fuel Injection	–
CKP	Crankshaft Position	Crank Angle
CL	Closed Loop	Closed Loop
CMP	Camshaft Position	Cam Angle
CPP	Clutch Pedal Position	–
CTOX	Continuous Trap Oxidizer	–
CTP	Closed Throttle Position	LL ON, Idle ON
DFI	Direct Fuel Injection (Diesel)	Direct Injection (DI)
DI	Distributor Ignition	–
DLC1 DLC2 DLC3	Data Link Connector 1 Data Link Connector 2 Data Link Connector 3	1. Check Connector 2. Total Diagnosis Communication Link (TDCL) 3. OBD II Diagnostic Connector
DTC	Diagnostic Trouble Code	Diagnostic Trouble Code
DTM	Diagnostic Test Mode	–
ECL	Engine Control Level	–
ECM	Engine Control Module	Engine ECU (Electronic Control Unit)
ECT	Engine Coolant Temperature	Coolant Temperature, Water Temperature (THW)
EEPROM	Electrically Erasable Programmable Read Only Memory	Electrically Erasable Programmable Read Only Memory (EEPROM), Erasable Programmable Read Only Memory (EPROM)
EFE	Early Fuel Evaporation	Cold Mixture Heater (CMH), Heat Control Valve (HCV)
EGR	Exhaust Gas Recirculation	Exhaust Gas Recirculation (EGR)
EI	Electronic Ignition	TOYOTA Distributorless Ignition (TDI)
EM	Engine Modification	Engine Modification (EM)
EPROM	Erasable Programmable Read Only Memory	Programmable Read Only Memory (PROM)
EVAP	Evaporative Emission	Evaporative Emission Control (EVAP)
FC	Fan Control	–
FEEPROM	Flash Electrically Erasable Programmable Read Only Memory	–
FEPROM	Flash Erasable Programmable Read Only Memory	–
FF	Flexible Fuel	–
FP	Fuel Pump	Fuel Pump
GEN	Generator	Alternator
GND	Ground	Ground (GND)

HO2S	Heated Oxygen Sensor	Heated Oxygen Sensor (HO_2S)
IAC	Idle Air Control	Idle Speed Control (ISC)
IAT	Intake Air Temperature	Intake or Inlet Air Temperature
ICM	Ignition Control Module	–
IFI	Indirect Fuel Injection	Indirect Injection (IDL)
IFS	Inertia Fuel–Shutoff	–
ISC	Idle Speed Control	–
KS	Knock Sensor	Knock Sensor
MAF	Mass Air Flow	Air Flow Meter
MAP	Manifold Absolute Pressure	Manifold Pressure Intake Vacuum
MC	Mixture Control	Electric Bleed Air Control Valve (EBCV) Mixture Control Valve (MCV) Electric Air Control Valve (EACV)
MDP	Manifold Differential Pressure	–
MFI	Multiport Fuel Injection	Electronic Fuel Injection (EFI)
MIL	Malfunction Indicator Lamp	Check Engine Lamp
MST	Manifold Surface Temperature	–
MVZ	Manifold Vacuum Zone	–
NVRAM	Non–Volatile Random Access Memory	–
O2S	Oxygen Sensor	Oxygen Sensor, O_2 Sensor (O_2S)
OBD	On–Board Diagnostic	On–Board Diagnostic System (OBD)
OC	Oxidation Catalytic Converter	Oxidation Catalyst Convert (OC), CCo
OP	Open Loop	Open Loop
PAIR	Pulsed Secondary Air Injection	Air Suction (AS)
PCM	Powertrain Control Module	–
PNP	Park/Neutral Position	–
PROM	Programmable Read Only Memory	–
PSP	Power Steering Pressure	–
PTOX	Periodic Trap Oxidizer	Diesel Particulate Filter (DPF) Diesel Particulate Trap (DPT)
RAM	Random Access Memory	Random Access Memory (RAM)
RM	Relay Module	–
ROM	Read Only Memory	Read Only Memory (ROM)
RPM	Engine Speed	Engine Speed
SC	Supercharger	Supercharger
SCB	Supercharger Bypass	E–ABV
SFI	Sequential Multiport Fuel Injection	Electronic Fuel Injection (EFI), Sequential Injection
SPL	Smoke Puff Limiter	–
SRI	Service Reminder Indicator	–
SRT	System Readiness Test	–
ST	Scan Tool	–
TB	Throttle Body	Throttle Body
TBI	Throttle Body Fuel Injection	Single Point Injection Central Fuel Injection (Ci)
TC	Turbocharger	Turbocharger
TCC	Torque Converter Clutch	Torque Converter

TCM	Transmission Control Module	Transmission ECU, ECT ECU
TP	Throttle Position	Throttle Position
TR	Transmission Range	–
TVV	Thermal Vacuum Valve	Bimetallic Vacuum Switching Valve (BVSV) Thermostatic Vacuum Switching Valve (TVSV)
TWC	Three–Way Catalytic Converter	Three–Way Catalytic (TWC) Manifold Converter CC_{RO}
TWC+OC	Three–Way + Oxidation Catalytic Converter	CC_R + CCo
VAF	Volume Air Flow	Air Flow Meter
VR	Voltage Regulator	Voltage Regulator
VSS	Vehicle Speed Sensor	Vehicle Speed Sensor
WOT	Wide Open Throttle	Full Throttle
WU–OC	Warm Up Oxidation Catalytic Converter	–
WU–TWC	Warm Up Three–Way Catalytic Converter	–
3GR	Third Gear	–
4GR	Fourth Gear	–

IDENTIFICATION INFORMATION

01031–06

VEHICLE IDENTIFICATION AND SERIAL NUMBERS

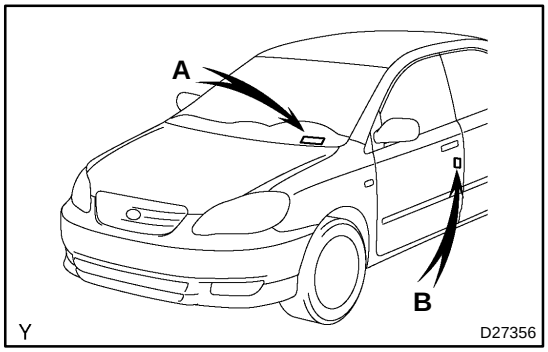

1. VEHICLE IDENTIFICATION NUMBER

(a) The vehicle identification number is stamped on the vehicle identification number plate and certification label, as shown in the illustration.

A: Vehicle Identification Number Plate

B: Certification Label

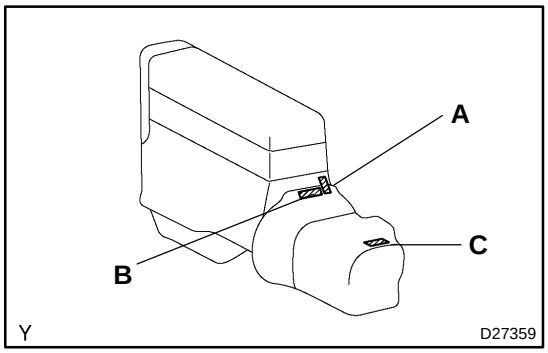

2. ENGINE SERIAL NUMBER AND TRANSAXLE SERIAL NUMBER

(a) The engine serial number is stamped on the cylinder block of the engine, and the transaxle serial number is stamped on the housing, as shown in the illustration.

A: 1ZZ–FE

B: C59

C: A245E

AUDIO & VISUAL SYSTEM

021C1–01

PREPARATION

SST

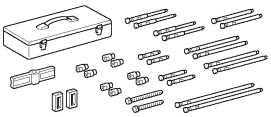	09950–50013	Puller C Set	ANTENNA CORD SUB–ASSY
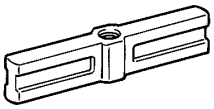	(09951–05010)	Hanger 150	ANTENNA CORD SUB–ASSY
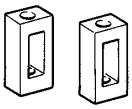	(09952–05010)	Slide Arm	ANTENNA CORD SUB–ASSY
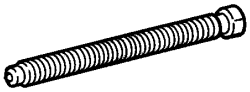	(09953–05020)	Center Bolt 150	ANTENNA CORD SUB–ASSY
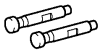	(09954–05021)	Claw No.2	ANTENNA CORD SUB–ASSY

Recomended Tools

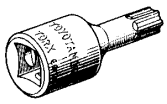	09042–00010	Torx Socket T30	ANTENNA CORD SUB–ASSY
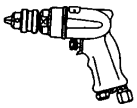	09050–00032	Air Drill	FRONT NO.1 SPEAKER ASSY
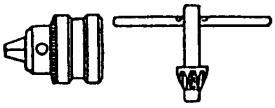	(09050–00210)	Chuck Set	FRONT NO.1 SPEAKER ASSY
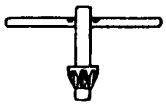	(09050–00220)	Handle	FRONT NO.1 SPEAKER ASSY
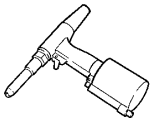	09050–20010	Air Riveter	FRONT NO.1 SPEAKER ASSY
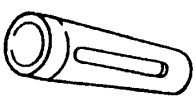	(09050–02010)	Dust Cap	FRONT NO.1 SPEAKER ASSY
	(09050–02020)	Nose Piece No.1	FRONT NO.1 SPEAKER ASSY

	09060–60350	Revet Cutter	FRONT NO.1 SPEAKER ASSY
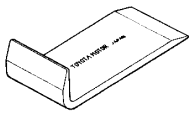	09070–20010	Moulding Remover	ANTENNA CORD SUB–ASSY AMPLIFIER ANTENNA ASSY

Equipment

Torque wrench	

AUTOMATIC TRANSMISSION / TRANS

021CJ–01

PREPARATION

SST

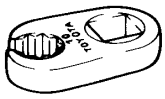	09023–12700	Union Nut Wrench 17mm	AUTOMATIC TRANSAXLE ASSY(ATM)
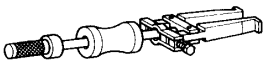	09308–00010	Oil Seal Puller	FRONT DIFFERENTIAL OIL SEAL(ATM)
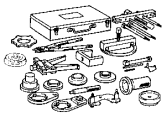	09350–32014	TOYOTA Automatic Transmission Tool Set	AUTOMATIC TRANSAXLE ASSY(ATM) FRONT DIFFERENTIAL OIL SEAL(ATM) TORQUE CONVERTER CLUTCH AND DRIVE PLATE(ATM)
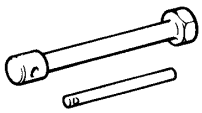	(09351–32010)	One–way Clutch Test Tool	AUTOMATIC TRANSAXLE ASSY(ATM) TORQUE CONVERTER CLUTCH AND DRIVE PLATE(ATM)
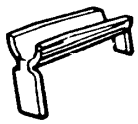	(09351–32020)	Stator Stopper	AUTOMATIC TRANSAXLE ASSY(ATM) TORQUE CONVERTER CLUTCH AND DRIVE PLATE(ATM)
	(09351–32111)	Side Bearing Race Replacer	FRONT DIFFERENTIAL OIL SEAL(ATM)
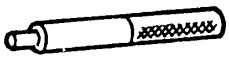	(09351–32130)	Handle	FRONT DIFFERENTIAL OIL SEAL(ATM)
	(09351–32150)	Oil Seal Replacer	FRONT DIFFERENTIAL OIL SEAL(ATM)
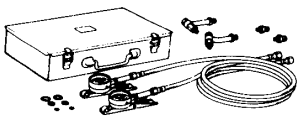	09992–00095	Automatic Transmission Oil Pressure Gauge Set	
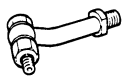	(09992–00231)	Adaptor C	
	(09992–00271)	Gauge Assy	
	09843–18030	Tacho–pulse Pickup Wire No.2	

Recomended Tools

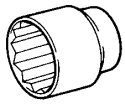	09011–12301	Socket Wrench 30 mm	AUTOMATIC TRANSAXLE ASSY(ATM)
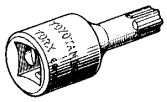	09042–00010	Torx Socket T30	FLOOR SHIFT PARKING LOCK CABLE ASSY(ATM)
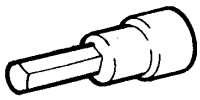	(09043–20100)	Socket Hexagon Wrench 10	FRONT DIFFERENTIAL OIL SEAL(ATM)

Equipment

Straight edge	Torque converter clutch
Vernier calipers	Torque converter clutch
Dial indicator or dial indicator with magnetic base	Drive plate
Torque wrench	
Engine sling device	Automatic transaxle assy
Slide calipers	Automatic transaxle assy,Front differential oil seal
Chain block	Automatic transaxle assy

Lubricant

Item	Capacity	Classification
Automatic transaxle fluid Dry fill Drain and refill	 7.3 liters (7.72 US qts, 6.42 lmp.qts) 3.0 liters (3.2 US qts, 2.6 lmp.qts)	ATF Type T–IV

SSM (Special Service Materials)

	08833–00070	”Adhesive 1324,” THREE BOND 1324 or equivalent

BRAKE

021CC–02

PREPARATION

SST

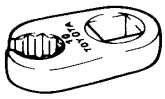	09023–00100	Union Nut Wrench 10 mm	BRAKE FLUID FRONT BRAKE REAR BRAKE BRAKE ACTUATOR ASSY BRAKE BOOSTER ASSY PROPORTIONING VALVE ASSY BRAKE MASTER CYLINDER SUB–ASSY(April, 2003)
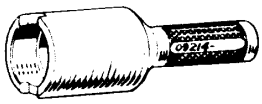	09214–76011	Crankshaft Pulley Replacer	SKID CONTROL SENSOR
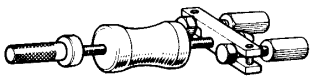	09520–00031	Rear Axle Shaft Puller	SKID CONTROL SENSOR
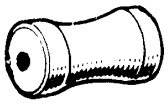	(09520–00040)	Shocker	SKID CONTROL SENSOR
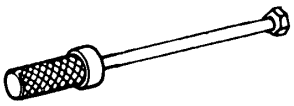	09521–00020	Drive Shaft Boot Clamping Tool	SKID CONTROL SENSOR
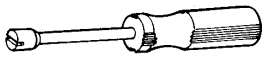	09718–00010	Shoe Hold Down Spring Driver	REAR BRAKE
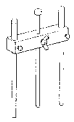	09737–00013	Brake Booster Push Rod Gauge	BRAKE MASTER CYLINDER SUB–ASSY(April, 2003)
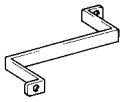	09737–00020	Brake Booster Push Rod Wrench	BRAKE MASTER CYLINDER SUB–ASSY(April, 2003)
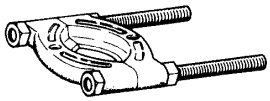	09950–00020	Bearing Remover	SKID CONTROL SENSOR

Recomended Tools

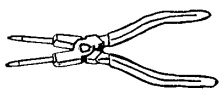	09905–00013	Snap Ring Pliers	BRAKE MASTER CYLINDER SUB–ASSY

Equipment

Ruler	
Dial indicator	
Micrometer	
Torque wrench	
Brake drum gauge	

Lubricant

Item	Capacity	Classification
Brake fluid	–	SAE J1703 or FMVSS No. 116 DOT3

CLUTCH

PREPARATION

021BQ–01

SST

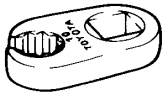	09023–00100	Union Nut Wrench 10 mm	CLUTCH RELEASE CYLINDER ASSY(MTM) CLUTCH MASTER CYLINDER ASSY(MTM)
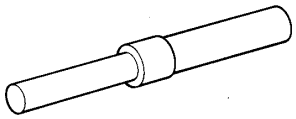	09301–00210	Clutch Guide Tool	CLUTCH UNIT(MTM)
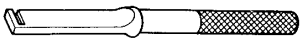	09333–00013	Universal Joint Bearing Remover & Replacer	CLUTCH UNIT(MTM)

Recomended Tools

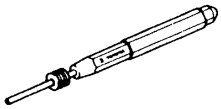	09031–00030	Pin Punch	CLUTCH MASTER CYLINDER ASSY
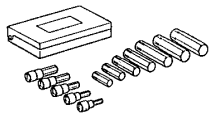	09040–00011	Hexagon Wrench Set	CLUTCH MASTER CYLINDER ASSY CLUTCH PEDAL SUB–ASSY
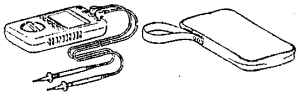	09082–00040	TOYOTA Electrical Tester	CLUTCH START SWITCH ASSY
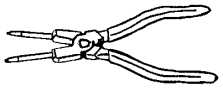	09905–00013	Snap Ring Pliers	CLUTCH MASTER CYLINDER ASSY

Equipment

Vernier calipers	
Dial indicator with magnetic base	
Torque wrench	

Lubricant

Item	Capacity	Classification
Brake fluid	–	SAE J1703 or FMVSS No. 116 DOT3

COMMUNICATION SYSTEM

021CO–01

PREPARATION

Recomended Tools

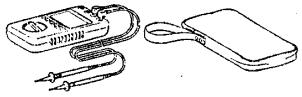	09082–00040	TOYOTA Electrical Tester	HORN SYSTEM

Equipment

Battery	

COOLING

021BO–02

PREPARATION

Recomended Tools

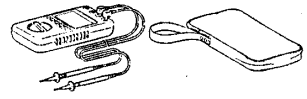	09082–00040	TOYOTA Electrical Tester	COOLING FAN SYSTEM
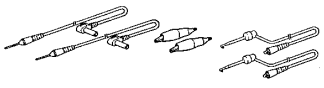	(09083–00150)	Test Lead Set	COOLING FAN SYSTEM

Equipment

Heater	
Radiator cap tester	
Slide calipers	
Thermometer	
Torque wrench	

Coolant

Item	Capacity	Classification
Engine coolant	6.5 liters (6.9 US qts, 5.7 lmp. qts)	TOYOTA long life coolant

CRUISE CONTROL

021BI–01

PREPARATION

SST

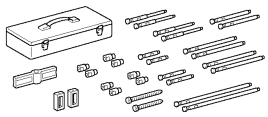	09950–50013	Puller C Set	SPEED CONTROL MAIN SWITCH ASSY
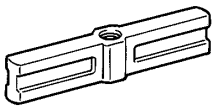	(09951–05010)	Hanger 150	SPEED CONTROL MAIN SWITCH ASSY
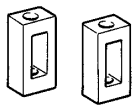	(09952–05010)	Slide Arm	SPEED CONTROL MAIN SWITCH ASSY
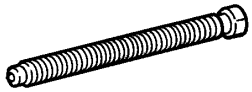	(09953–05020)	Center Bolt 150	SPEED CONTROL MAIN SWITCH ASSY
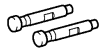	(09954–05021)	Claw No.2	SPEED CONTROL MAIN SWITCH ASSY

Recomended Tools

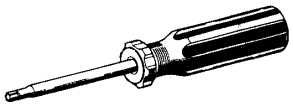	09041–00030	Torx Driver T30	INSTRUMENT PANEL SAFETY PAD SUB–ASSY
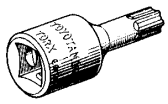	09042–00010	Torx Socket T30	INSTRUMENT PANEL SAFETY PAD SUB–ASSY

Equipment

Torque wrench	
Adhesive Tape	

DIAGNOSTICS

021CL–01

PREPARATION

SST

	09816–30010	Oil Pressure Switch Socket	SFI SYSTEM
	09843–18040	Diagnosis Check Wire No.2	SFI SYSTEM SUPPLEMENTAL RESTRAINT SYSTEM

Recomended Tools

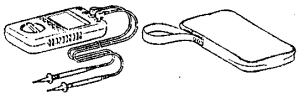	09082–00040	TOYOTA Electrical Tester	SFI SYSTEM SUPPLEMENTAL RESTRAINT SYSTEM ELECTRONIC CONTROLLED AUTOMATIC TRANSAXLE [ECT] COMBINATION METER WIRELESS DOOR LOCK CONTROL SYSTEM
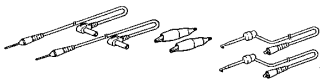	(09083–00150)	Test Lead Set	SFI SYSTEM ABS WITH EBD SYSTEM SUPPLEMENTAL RESTRAINT SYSTEM ELECTRONIC CONTROLLED AUTOMATIC TRANSAXLE [ECT] AUDIO SYSTEM CRUISE CONTROL SYSTEM COMBINATION METER WIRELESS DOOR LOCK CONTROL SYSTEM POWER DOOR LOCK CONTROL SYSTEM
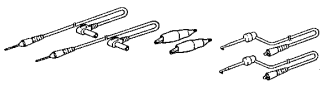	(09083–00150)	Test Lead Set	SFI SYSTEM ABS WITH EBD SYSTEM SUPPLEMENTAL RESTRAINT SYSTEM ELECTRONIC CONTROLLED AUTOMATIC TRANSAXLE [ECT] AUDIO SYSTEM CRUISE CONTROL SYSTEM COMBINATION METER WIRELESS DOOR LOCK CONTROL SYSTEM POWER DOOR LOCK CONTROL SYSTEM

DRIVE SHAFT / PROPELLER SHAFT

021BZ–01

PREPARATION

SST

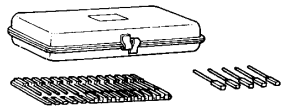	09240–00020	Wire Gauge Set	FRONT DRIVE SHAFT
	(09242–00150)	Wire Gauge 1.5 mm (0.059 in.)	FRONT DRIVE SHAFT
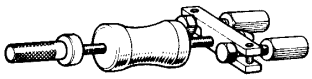	09520–00031	Rear Axle Shaft Puller	FRONT AXLE HUB SUB–ASSY LH
	09520–01010	Drive Shaft Remover Attachment	FRONT DRIVE SHAFT
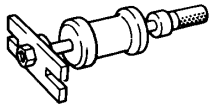	09520–24010	Differential Side Gear Shaft Puller	FRONT DRIVE SHAFT
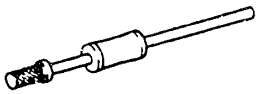	(09520–32040)	Shocker Set	FRONT DRIVE SHAFT
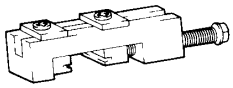	09521–24010	Rear Axle Shaft Puller	FRONT DRIVE SHAFT
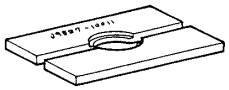	09527–10011	Rear Axle Shaft Bearing Remover	FRONT DRIVE SHAFT
	09527–17011	Rear Axle Shaft Bearing Remover	FRONT AXLE HUB SUB–ASSY LH
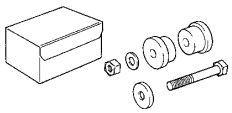	09608–16042	Front Hub Bearing Adjusting Tool	FRONT DRIVE SHAFT
	(09608–02021)	Bolt & Nut	FRONT DRIVE SHAFT
	(09608–02041)	Retainer	FRONT DRIVE SHAFT

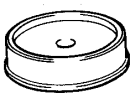	09608–32010	Steering Knuckle Oil Seal Replacer	FRONT AXLE HUB SUB–ASSY LH
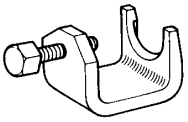	09628–10011	Ball Joint Puller	REAR AXLE LH HUB BOLT FRONT AXLE LH HUB BOLT
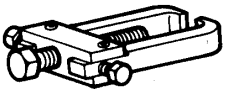	09628–62011	Boll Joint Puller	FRONT DRIVE SHAFT FRONT AXLE HUB SUB–ASSY LH
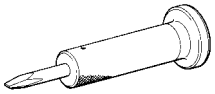	09930–00010	Drive Shaft Nut Chisel	FRONT DRIVE SHAFT FRONT AXLE HUB SUB–ASSY LH
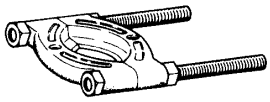	09950–00020	Bearing Remover	FRONT DRIVE SHAFT
	09950–40011	Puller B Set	FRONT AXLE HUB SUB–ASSY LH
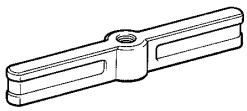	(09951–04020)	Hanger 200	FRONT AXLE HUB SUB–ASSY LH
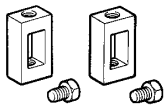	(09952–04010)	Slide Arm	FRONT AXLE HUB SUB–ASSY LH
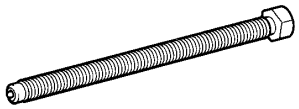	(09953–04030)	Center Bolt 200	FRONT AXLE HUB SUB–ASSY LH
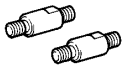	(09954–04010)	Arm 25	FRONT AXLE HUB SUB–ASSY LH
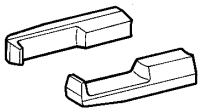	(09955–04061)	Claw No.6	FRONT AXLE HUB SUB–ASSY LH
	(09957–04010)	Attachment	FRONT AXLE HUB SUB–ASSY LH
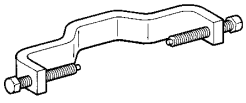	(09958–04011)	Holder	FRONT AXLE HUB SUB–ASSY LH

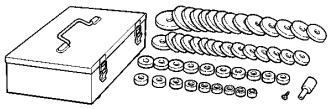	09950–60010	Replacer Set	FRONT AXLE HUB SUB–ASSY LH
	(09951–00370)	Replacer 37	FRONT AXLE HUB SUB–ASSY LH
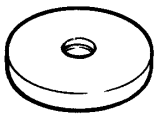	(09951–00600)	Replacer 60	FRONT AXLE HUB SUB–ASSY LH
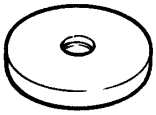	(09951–00640)	Replacer 64	FRONT AXLE HUB SUB–ASSY LH
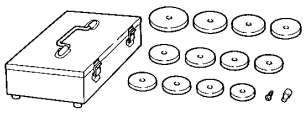	09950–60020	Replacer Set No.2	FRONT AXLE HUB SUB–ASSY LH
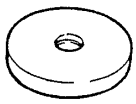	(09951–00720)	Replacer 72	FRONT AXLE HUB SUB–ASSY LH
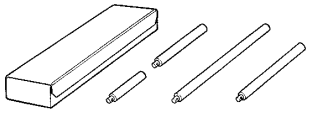	09950–70010	Handle Set	FRONT AXLE HUB SUB–ASSY LH
	(09951–07100)	Handle 100	FRONT AXLE HUB SUB–ASSY LH

Recomended Tools

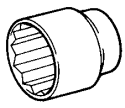	09011–12301	Socket Wrench 30 mm	FRONT DRIVE SHAFT FRONT AXLE HUB SUB–ASSY LH
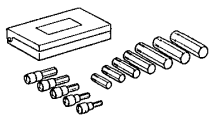	09040–00011	Hexagon Wrench Set	FRONT DRIVE SHAFT FRONT AXLE HUB SUB–ASSY LH
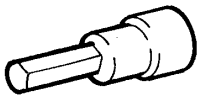	(09043–20060)	Socket Hexagon Wrench 6	FRONT DRIVE SHAFT FRONT AXLE HUB SUB–ASSY LH
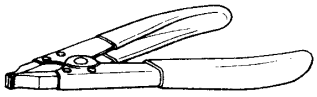	09905–00012	Snap Ring No.1 Expander	FRONT DRIVE SHAFT
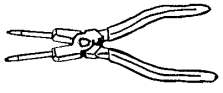	09905–00013	Snap Ring Pliers	FRONT AXLE HUB SUB–ASSY LH

Equipment

Torque wrench	
Dial indicator with magnetic base	

Lubricant

Item		Capacity
Front drive shaft	Inboard joint grease	135 – 155 g (4.8 – 5.5 oz.)

ENGINE CONTROL SYSTEM

021A2–03

PREPARATION

Equipment

Ohmmeter	
Radiator cup tester	
Torque wrench	

ENGINE HOOD/DOOR

022VI–01

PREPARATION

SST

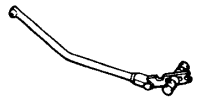	09804–24010	Luggage Compartment Door Torsion Bar Tool	LUGGAGE DOOR HINGE TORSION BAR RH
	09812–00010	Door Hinge Set Bolt Wrench	FRONT DOOR

Recomended Tools

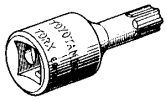	09042–00010	Torx Socket T30	FRONT DOOR REAR DOOR
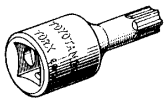	09042–00020	Torx Socket T40	FRONT DOOR REAR DOOR

Equipment

Air riveter	
Clip remover	
Drill	
Hand riveter	
Tape	To avoid surface damage
Torque wrench	

ENGINE MECHANICAL

021CI–02

PREPARATION

SST

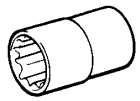	09011–38121	12 mm Socket Wrench for 12 Pointed Head	CYLINDER BLOCK ASSY(April, 2003)
	09032–00100	Oil Pan Seal Cutter	PARTIAL ENGINE ASSY(April, 2003)
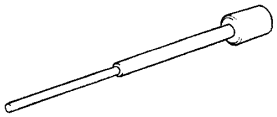	09201–01055	Valve Guide Bushing Remover & Replacer 5.5	CYLINDER HEAD ASSY
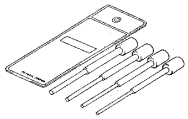	09201–10000	Valve Guide Bushing Remover & Replacer Set	CYLINDER HEAD ASSY
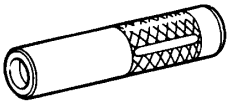	09201–41020	Valve Stem Oil Seal Replacer	CYLINDER HEAD ASSY
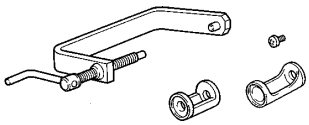	09202–70020	Valve Spring Compressor	CYLINDER HEAD ASSY
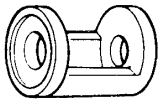	(09202–00010)	Attachment	CYLINDER HEAD ASSY
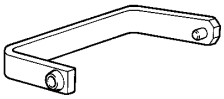	(09202–01010)	Arm	CYLINDER HEAD ASSY
	(09202–01020)	Set Bolt	CYLINDER HEAD ASSY
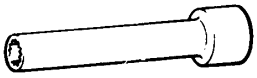	09205–16010	Cylinder Head Bolt Wrench	CYLINDER BLOCK ASSY(April, 2003)
	09223–15020	Oil Seal & Bearing Replacer	ENGINE REAR OIL SEAL PARTIAL ENGINE ASSY(April, 2003)
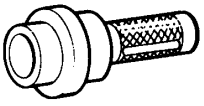	09223–22010	Crankshaft Front Oil Seal Replacer	CHAIN SUB–ASSY TIMING CHAIN OR BELT COVER OIL SEAL CYLINDER HEAD GASKET PARTIAL ENGINE ASSY(April, 2003)

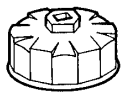	09228–06501	Oil Filter Wrench	PARTIAL ENGINE ASSY(April, 2003)
	09268–21010	Fuel Hose Puller	CYLINDER HEAD GASKET
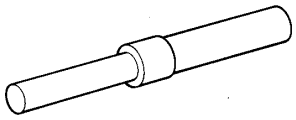	09301–00210	Clutch Guide Tool	ENGINE REAR OIL SEAL PARTIAL ENGINE ASSY(April, 2003)
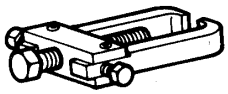	09628–62011	Boll Joint Puller	PARTIAL ENGINE ASSY(April, 2003)
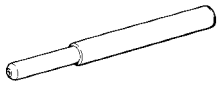	09670–00010	Front Crossmember Guide Tool	PARTIAL ENGINE ASSY(April, 2003)
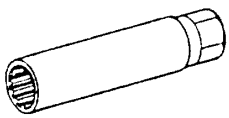	09817–33190	Sensor Socket Wrench	PARTIAL ENGINE ASSY(April, 2003)
	09843–18040	Diagnosis Check Wire No.2	ENGINE ASSEMBLY CYLINDER HEAD GASKET PARTIAL ENGINE ASSY(April, 2003)
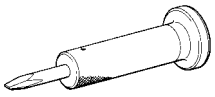	09930–00010	Drive Shaft Nut Chisel	PARTIAL ENGINE ASSY(April, 2003)
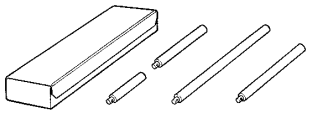	09950–70010	Handle Set	ENGINE REAR OIL SEAL CYLINDER HEAD ASSY PARTIAL ENGINE ASSY(April, 2003)
	(09951–07100)	Handle 100	ENGINE REAR OIL SEAL CYLINDER HEAD ASSY PARTIAL ENGINE ASSY(April, 2003)
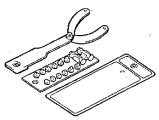	09960–10010	Variable Pin Wrench Set	CHAIN SUB–ASSY TIMING CHAIN OR BELT COVER OIL SEAL ENGINE REAR OIL SEAL CYLINDER HEAD GASKET PARTIAL ENGINE ASSY(April, 2003)
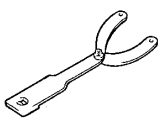	(09962–01000)	Variable Pin Wrench Arm Assy	CHAIN SUB–ASSY TIMING CHAIN OR BELT COVER OIL SEAL ENGINE REAR OIL SEAL CYLINDER HEAD GASKET PARTIAL ENGINE ASSY(April, 2003)

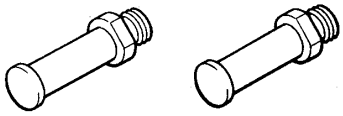	(09963–01000)	Pin 10	CHAIN SUB–ASSY TIMING CHAIN OR BELT COVER OIL SEAL ENGINE REAR OIL SEAL CYLINDER HEAD GASKET PARTIAL ENGINE ASSY(April, 2003)
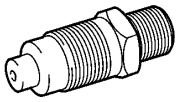	09992–00500	Compression Gauge Attachment	ENGINE ASSEMBLY CYLINDER HEAD GASKET

Recomended Tools

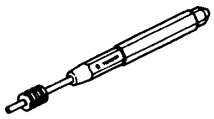	09031–00040	Pin Punch .	CYLINDER HEAD ASSY
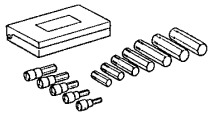	09040–00011	Hexagon Wrench Set	PARTIAL ENGINE ASSY(April, 2003)
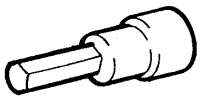	(09043–20050)	Socket Hexagon Wrench 5	PARTIAL ENGINE ASSY(April, 2003)
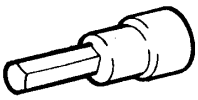	(09043–20100)	Socket Hexagon Wrench 10	CYLINDER HEAD ASSY PARTIAL ENGINE ASSY(April, 2003)
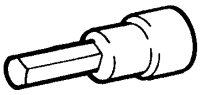	(09043–20120)	Socket Hexagon Wrench 12	PARTIAL ENGINE ASSY(April, 2003)
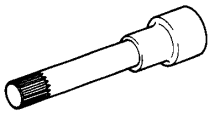	09043–50100	Bi–hexagon Wrench 10 mm	PARTIAL ENGINE ASSY(April, 2003)
	09090–04020	Engine Sling Device	PARTIAL ENGINE ASSY(April, 2003)

SSM

	08826–00080	Seal Packing Black or equivalent (FIPG)	CHAIN SUB–ASSY CAMSHAFT CYLINDER HEAD GASKET VALVE CLEARANCE PARTIAL ENGINE ASSY(April, 2003) CYLINDER BLOCK ASSY(April, 2003)
	08826–00100	"Seal Packing 1282B," THREE BOND 1282B or equivalent (FIPG)	PARTIAL ENGINE ASSY(April, 2003)
	08833–00070	"Adhesive 1324," THREE BOND 1324 or equivalent	ENGINE REAR OIL SEAL CYLINDER HEAD ASSY PARTIAL ENGINE ASSY(April, 2003)

08833–00080	Adhesive 1344 THREE BOND 1344 LOCTITE 242 or equivalent	CYLINDER BLOCK ASSY(April, 2003)

Equipment

CO/HC meter	
Cylinder gauge	
Dial indicator	
Feeler gauge	
Micrometer	
Piston heater	
Plastigage	
Precision straight edge	
Radiator cap tester	
Sandpaper(#400)	
Steel square	
Straight edge	
Spring tester	
Spring tension gauge	
Torque wrench	
Valve seat cutter	
Vernier calipers	
V–block	
Wooden block	

EXHAUST

021A3–02

PREPARATION

Equipment

Torque wrench	
Vernier calipers	

EXTERIOR/INTERIOR TRIM

021C5–02

PREPARATION

Recomended Tools

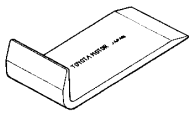	09070–20010 Moulding Remover	FRONT DOOR BELT MOULDING ASSY LH REAR DOOR BELT MOULDING ASSY LH ROOF DRIP SIDE FINISH MOULDING CENTER LH REAR BUMPER ROOF HEADLINING ASSY

Equipment

Adhesive tape	To avoid surface damage.
Cleaner	
Clip remover	
Heat light	Moulding
Piano wire	Moulding
Tape	To avoid surface damage.
Torque wrench	
White gasoline	
Wooden block or similar object	For tying both piano wire ends

FRONT SUSPENSION

PREPARATION

021C2–01

SST

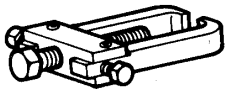	09628–62011	Boll Joint Puller	LOWER BALL JOINT ASSY FRONT LH
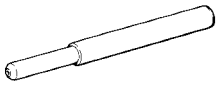	09670–00010	Front Crossmember Guide Tool	FRONT SUSPENSION ARM SUB–ASSY LOWER NO.1 LH STABILIZER BAR FRONT
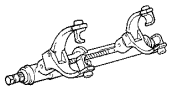	09727–30021	Coil Spring Compressor	FRONT SHOCK ABSORBER WITH COIL SPRING
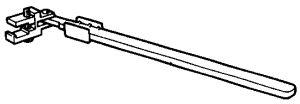	09729–22031	Front Spring Upper Seat Holder	FRONT SHOCK ABSORBER WITH COIL SPRING
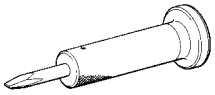	09930–00010	Drive Shaft Nut Chisel	LOWER BALL JOINT ASSY FRONT LH

Recomended Tools

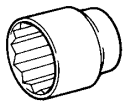	09011–12301	Socket Wrench 30 mm	LOWER BALL JOINT ASSY FRONT LH
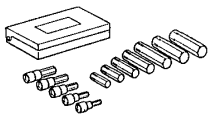	09040–00011	Hexagon Wrench Set	FRONT SHOCK ABSORBER WITH COIL SPRING FRONT SUSPENSION ARM SUB–ASSY LOWER NO.1 LH STABILIZER BAR FRONT
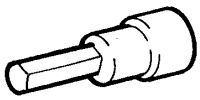	(09043–20060)	Socket Hexagon Wrench 6	FRONT SHOCK ABSORBER WITH COIL SPRING FRONT SUSPENSION ARM SUB–ASSY LOWER NO.1 LH STABILIZER BAR FRONT

Equipment

Torque wrench	
Dial indicator with magnetic base	
Tire pressure gauge	
Alignment tester	
Toe–in gauge	
Angle gauge	
Camber–caster–kingpin gauge	
Engine Sling Device	
Drill	

FUEL

PREPARATION

021BK–01

SST

	09268–21010	Fuel Hose Puller	FUEL INJECTOR ASSY
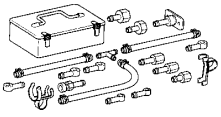	09268–41047	Injection Measuring Tool Set	FUEL SYSTEM
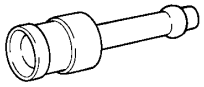	(09268–41110)	Adaptor	FUEL SYSTEM
	(09268–41300)	Clamp	FUEL SYSTEM
	(95336–08070)	Hose	FUEL SYSTEM
	09842–30080	Wire ”H” EFI Inspection	FUEL SYSTEM

Recomended Tools

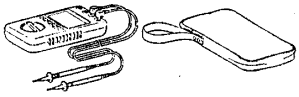	09082–00040	TOYOTA Electrical Tester	FUEL SYSTEM
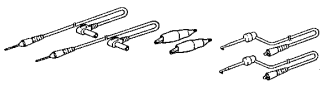	(09083–00150)	Test Lead Set	FUEL SYSTEM

SSM

	08850–00065	Butyl Tape Set	FUEL PUMP ASSY FUEL TANK ASSY

Equipment

Service wire harness	
Stopwatch	
Measuring flask	
Torque wrench	
Vernier calipers	
Clip	

HEATER & AIR CONDITIONER

021CK–01

PREPARATION

SST

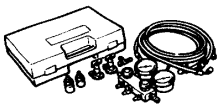	07110–58060	Air Conditioner Service Tool Set	REFRIGERANT COOLER COMPRESSOR ASSY W/RECEIVER CONDENSER ASSY AIR CONDITIONER UNIT ASSY
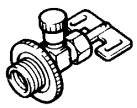	(07117–58060)	Refrigerant Drain Service Valve	REFRIGERANT COOLER COMPRESSOR ASSY W/RECEIVER CONDENSER ASSY AIR CONDITIONER UNIT ASSY
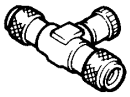	(07117–58070)	T–Joint	REFRIGERANT COOLER COMPRESSOR ASSY W/RECEIVER CONDENSER ASSY AIR CONDITIONER UNIT ASSY
	(07117–58080)	Quick Disconnect Adapter	REFRIGERANT COOLER COMPRESSOR ASSY W/RECEIVER CONDENSER ASSY AIR CONDITIONER UNIT ASSY
	(07117–58090)	Quick Disconnect Adapter	REFRIGERANT COOLER COMPRESSOR ASSY W/RECEIVER CONDENSER ASSY AIR CONDITIONER UNIT ASSY
	(07117–78050)	Refrigerant Charging Gauge	REFRIGERANT COOLER COMPRESSOR ASSY W/RECEIVER CONDENSER ASSY AIR CONDITIONER UNIT ASSY
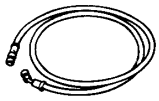	(07117–88060)	Refrigerant Charging Hose	REFRIGERANT COOLER COMPRESSOR ASSY W/RECEIVER CONDENSER ASSY AIR CONDITIONER UNIT ASSY
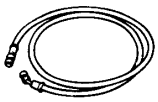	(07117–88070)	Refrigerant Charging Hose	REFRIGERANT COOLER COMPRESSOR ASSY W/RECEIVER CONDENSER ASSY AIR CONDITIONER UNIT ASSY
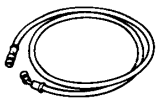	(07117–88080)	Refrigerant Charging Hose	REFRIGERANT COOLER COMPRESSOR ASSY W/RECEIVER CONDENSER ASSY AIR CONDITIONER UNIT ASSY
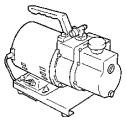	07117–48130	Vacuum Pump (220 V)	REFRIGERANT COOLER COMPRESSOR ASSY W/RECEIVER CONDENSER ASSY AIR CONDITIONER UNIT ASSY
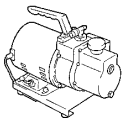	07117–48140	Vacuum Pump (240 V)	REFRIGERANT COOLER COMPRESSOR ASSY W/RECEIVER CONDENSER ASSY AIR CONDITIONER UNIT ASSY
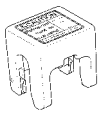	09870–00015	A/C Quick Joint Puller No.1	AIR CONDITIONER UNIT ASSY

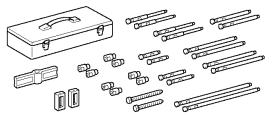	09950–50013	Puller C Set	AIR CONDITIONER UNIT ASSY
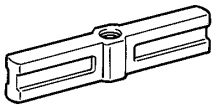	(09951–05010)	Hanger 150	AIR CONDITIONER UNIT ASSY
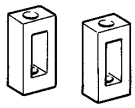	(09952–05010)	Slide Arm	AIR CONDITIONER UNIT ASSY
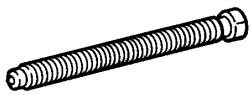	(09953–05020)	Center Bolt 150	AIR CONDITIONER UNIT ASSY
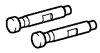	(09954–05021)	Claw No.2	AIR CONDITIONER UNIT ASSY

Recomended Tools

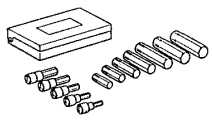	09040–00011	Hexagon Wrench Set	W/RECEIVER CONDENSER ASSY AIR CONDITIONER UNIT ASSY
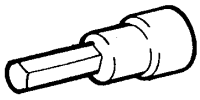	(09043–20050)	Socket Hexagon Wrench 5	AIR CONDITIONER UNIT ASSY
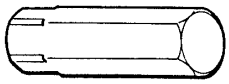	(09043–30140)	Straight Hexagon Wrench 14	W/RECEIVER CONDENSER ASSY
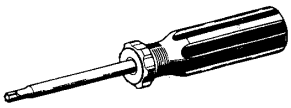	09041–00010	Torx Driver T20	W/RECEIVER CONDENSER ASSY
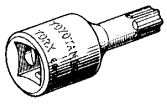	09042–00010	Torx Socket T30	AIR CONDITIONER UNIT ASSY
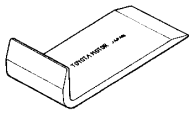	09070–20010	Moulding Remover	AIR CONDITIONER UNIT ASSY
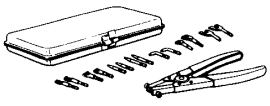	09904–00010	Expander Set	COOLER COMPRESSOR ASSY
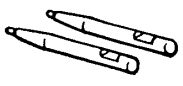	(09904–00050)	No. 4 Claw	COOLER COMPRESSOR ASSY

	95416–00140	Gas Leak Detector (Halogen Leak Detector) (DENSO Part No.)	REFRIGERANT COOLER COMPRESSOR ASSY W/RECEIVER CONDENSER ASSY AIR CONDITIONER UNIT ASSY

Equipment

Voltmeter	
Anmeter	
Ohmmeter	
Vinyl tape	
Hexagon wrench 5 mm (0.20 in.)	
Hexagon wrench 14 mm (0.55 in.)	
Vise pliers	
Gas leak detector	
Dial indicator with magnetic base	
Radiator cap tester	
Torque wrench	

Lubricant

Item	Capacity	Classification
Compressor oil	–	ND–OIL 8 or equivalent

IGNITION

021A5–02

PREPARATION

Recomended Tools

	(09857–00031) Spark Plug Gap Gauge	IGNITION SYSTEM

Equipment

Ohmmeter	
Spark plug cleaner	

INSTRUMENT PANEL/METER

021C0–01

PREPARATION

SST

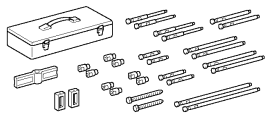	09950–50013	Puller C Set	INSTRUMENT PANEL SUB–ASSY LOWER
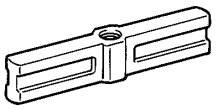	(09951–05010)	Hanger 150	INSTRUMENT PANEL SUB–ASSY LOWER
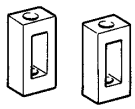	(09952–05010)	Slide Arm	INSTRUMENT PANEL SUB–ASSY LOWER
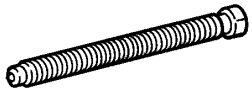	(09953–05020)	Center Bolt 150	INSTRUMENT PANEL SUB–ASSY LOWER
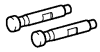	(09954–05021)	Claw No.2	INSTRUMENT PANEL SUB–ASSY LOWER

Recomended Tools

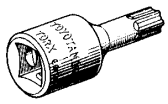	09042–00010	Torx Socket T30	INSTRUMENT PANEL SUB–ASSY LOWER
	09070–20010	Moulding Remover	INSTRUMENT PANEL SUB–ASSY LOWER

Equipment

Ohmmeter	
Torque wrench	
Adhesive Tape	

LIGHTING

021C6–01

PREPARATION

Recomended Tools

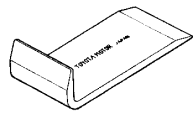	09070–20010	Moulding Remover	BACK UP LAMP ASSY LH
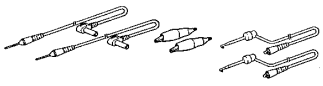	(09083–00150)	Test Lead Set	LIGHTING SYSTEM

Equipment

Torque wrench	

LUBRICATION

021A4–03

PREPARATION

SST

	09228–06501 Oil Filter Wrench	OIL FILTER SUB–ASSY

Equipment

Feeler gauge	
Radiator cup tester	
Torque wrench	

Lubricant

Item	Capacity	Classification
Oil grade	–	API grade SL Energy–Conserving or ILSAC, multi–grade engine oil
Drain and refill w/ oil filter change w/o oil filter change	3.7 liters (3.9 US qts, 3.3 lmp. qts) 3.5 liters (3.7 US qts, 3.1 lmp. qts)	–
Dry fill	4.2 liters (4.4 US qts, 3.7 lmp. qts)	–

MANUAL TRANSMISSION/TRANSAXLE

021CF–01

PREPARATION

SST

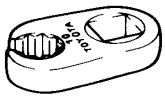	09023–12700	Union Nut Wrench 17mm	MANUAL TRANSAXLE ASSY
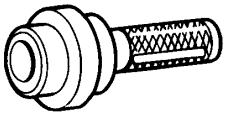	09223–50010	Crankshaft Front Oil Seal Replacer	OUTPUT SHAFT ASSY(C59)
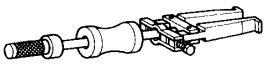	09308–00010	Oil Seal Puller	FRONT DIFFERENTIAL OIL SEAL MANUAL TRANSAXLE ASSY(C59)
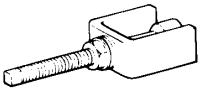	09309–12020	5th Driven Gear Replacer	MANUAL TRANSAXLE ASSY(C59)
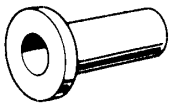	09309–36010	Transmission Rear Bearing Replacer	MANUAL TRANSAXLE ASSY(C59)
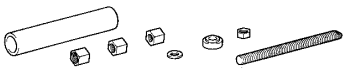	09309–36100	Transmission Bearing Replacer Set	OUTPUT SHAFT ASSY(C59)
	(09309–03610)	Body	OUTPUT SHAFT ASSY(C59)
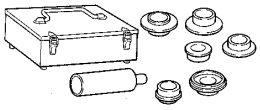	09316–60011	Transmission & Transfer Bearing Replacer	MANUAL TRANSAXLE ASSY(C59) INPUT SHAFT ASSY(C59) OUTPUT SHAFT ASSY(C59)
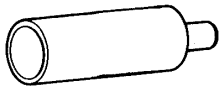	(09316–00011)	Replacer Pipe	MANUAL TRANSAXLE ASSY(C59)
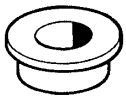	(09316–00021)	Replacer ”A”	INPUT SHAFT ASSY(C59)
	(09316–00031)	Replacer ”B”	OUTPUT SHAFT ASSY(C59)
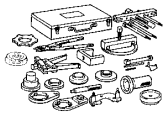	09350–32014	TOYOTA Automatic Transmission Tool Set	MANUAL TRANSAXLE ASSY(C59)

	(09351–32120)	Overdrive Bearing Replacer	MANUAL TRANSAXLE ASSY(C59)
	09520–01010	Drive Shaft Remover Attachment	MANUAL TRANSAXLE ASSY FRONT DIFFERENTIAL OIL SEAL
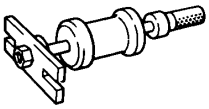	09520–24010	Differential Side Gear Shaft Puller	MANUAL TRANSAXLE ASSY FRONT DIFFERENTIAL OIL SEAL
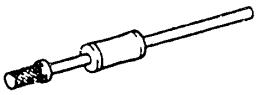	(09520–32040)	Shocker Set	MANUAL TRANSAXLE ASSY FRONT DIFFERENTIAL OIL SEAL
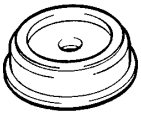	09554–14010	Differential Oil Seal Replacer	FRONT DIFFERENTIAL OIL SEAL
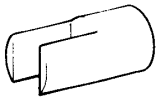	09564–32011	Differential Preload Adaptor	MANUAL TRANSAXLE ASSY(C59)
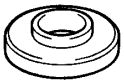	09608–00071	Drive Pinion Rear Bearing Cone Replacer	OUTPUT SHAFT ASSY(C59)
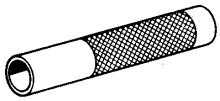	09612–22011	Tilt Handle Bearing Replacer	OUTPUT SHAFT ASSY(C59)
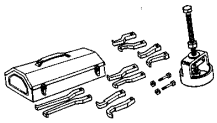	09612–65014	Steering Worm Bearing Puller	MANUAL TRANSAXLE ASSY(C59)
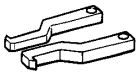	(09612–01040)	Claw ”D”	MANUAL TRANSAXLE ASSY(C59)
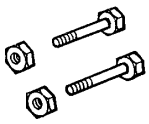	(09612–01050)	Hanger Pin with Nut	MANUAL TRANSAXLE ASSY(C59)
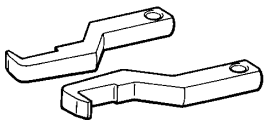	(09612–01060)	Claw ”E”	MANUAL TRANSAXLE ASSY(C59)
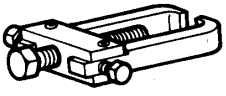	09628–62011	Boll Joint Puller	MANUAL TRANSAXLE ASSY FRONT DIFFERENTIAL OIL SEAL

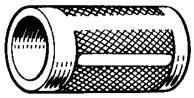	09636–20010	Upper Ball Joint Dust Cover Replacer	MANUAL TRANSAXLE ASSY(C59) INPUT SHAFT ASSY(C59)
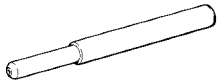	09670–00010	Front Crossmember Guide Tool	MANUAL TRANSAXLE ASSY
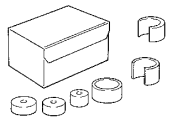	09710–20011	Front Suspension Bushing Tool Set	MANUAL TRANSAXLE ASSY(C59)
	(09710–06071)	Replacer	MANUAL TRANSAXLE ASSY(C59)
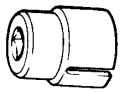	09817–16011	Back–up Light Switch Tool	MANUAL TRANSAXLE ASSY(C59)
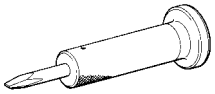	09930–00010	Drive Shaft Nut Chisel	MANUAL TRANSAXLE ASSY FRONT DIFFERENTIAL OIL SEAL
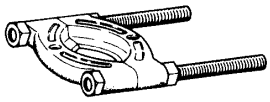	09950–00020	Bearing Remover	MANUAL TRANSAXLE ASSY(C59) INPUT SHAFT ASSY(C59) OUTPUT SHAFT ASSY(C59)
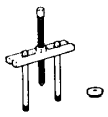	09950–00030	Bearing Remover Attachment	MANUAL TRANSAXLE ASSY(C59)
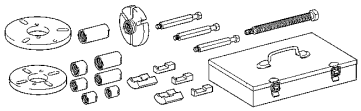	09950–30012	Puller A Set	MANUAL TRANSAXLE ASSY(C59)
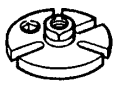	(09951–03010)	Upper Plate	MANUAL TRANSAXLE ASSY(C59)
	(09953–03010)	Center Bolt	MANUAL TRANSAXLE ASSY(C59)
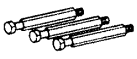	(09954–03010)	Arm	MANUAL TRANSAXLE ASSY(C59)
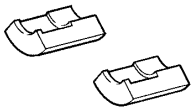	(09955–03011)	Claw No.1	MANUAL TRANSAXLE ASSY(C59)

	(09957–04010)	Attachment	MANUAL TRANSAXLE ASSY(C59)
	09950–40011	Puller B Set	MANUAL TRANSAXLE ASSY(C59)
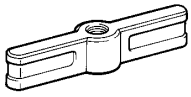	(09951–04010)	Hanger 150	MANUAL TRANSAXLE ASSY(C59)
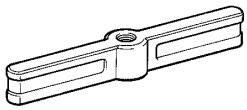	(09951–04020)	Hanger 200	MANUAL TRANSAXLE ASSY(C59)
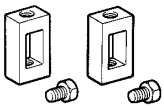	(09952–04010)	Slide Arm	MANUAL TRANSAXLE ASSY(C59)
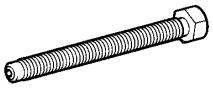	(09953–04020)	Center Bolt 150	MANUAL TRANSAXLE ASSY(C59)
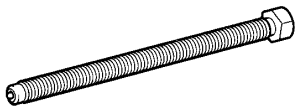	(09953–04030)	Center Bolt 200	MANUAL TRANSAXLE ASSY(C59)
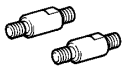	(09954–04010)	Arm 25	MANUAL TRANSAXLE ASSY(C59)
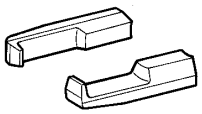	(09955–04061)	Claw No.6	MANUAL TRANSAXLE ASSY(C59)
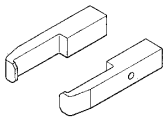	(09955–04071)	Claw No.7	MANUAL TRANSAXLE ASSY(C59)
	(09957–04010)	Attachment	MANUAL TRANSAXLE ASSY(C59)
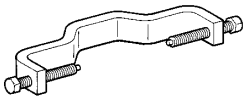	(09958–04011)	Holder	MANUAL TRANSAXLE ASSY(C59)
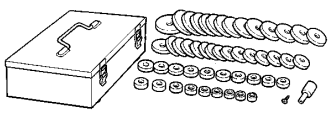	09950–60010	Replacer Set	MANUAL TRANSAXLE ASSY(C59) OUTPUT SHAFT ASSY(C59) SHIFT & SELECT LEVER SHAFT ASSY(C59)

	(09951–00190) Replacer 19	MANUAL TRANSAXLE ASSY(C59)
	(09951–00200) Replacer 20	MANUAL TRANSAXLE ASSY(C59)
	(09951–00220) Replacer 22	SHIFT & SELECT LEVER SHAFT ASSY(C59)
	(09951–00360) Replacer 36	MANUAL TRANSAXLE ASSY(C59)
	(09951–00370) Replacer 37	MANUAL TRANSAXLE ASSY(C59)
	(09951–00420) Replacer 42	MANUAL TRANSAXLE ASSY(C59)
	(09951–00450) Replacer 45	OUTPUT SHAFT ASSY(C59)
	(09951–00530) Replacer 53	MANUAL TRANSAXLE ASSY(C59)
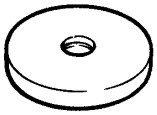	(09951–00550) Replacer 55	MANUAL TRANSAXLE ASSY(C59)
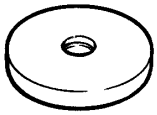	(09951–00600) Replacer 60	MANUAL TRANSAXLE ASSY(C59)
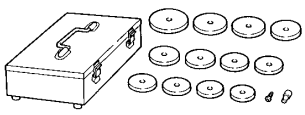	09950–60020 Replacer Set No.2	MANUAL TRANSAXLE ASSY(C59)
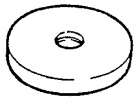	(09951–00680) Replacer 68	MANUAL TRANSAXLE ASSY(C59)
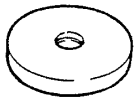	(09951–00710) Replacer 71	MANUAL TRANSAXLE ASSY(C59)

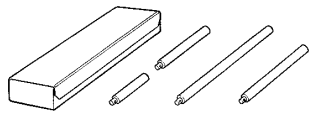	09950–70010	Handle Set	FRONT DIFFERENTIAL OIL SEAL MANUAL TRANSAXLE ASSY(C59) SHIFT & SELECT LEVER SHAFT ASSY(C59)
	(09951–07100)	Handle 100	MANUAL TRANSAXLE ASSY(C59) SHIFT & SELECT LEVER SHAFT ASSY(C59)
	(09951–07150)	Handle 150	MANUAL TRANSAXLE ASSY(C59)
	(09951–07200)	Handle 200	FRONT DIFFERENTIAL OIL SEAL

Recomended Tools

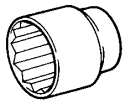	09011–12301	Socket Wrench 30 mm	MANUAL TRANSAXLE ASSY FRONT DIFFERENTIAL OIL SEAL
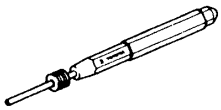	09031–00030	Pin Punch	DIFFERENTIAL CASE ASSY(C59)
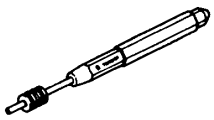	09031–00040	Pin Punch .	MANUAL TRANSAXLE ASSY(C59) SHIFT & SELECT LEVER SHAFT ASSY(C59)
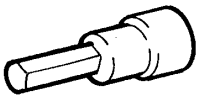	(09043–20060)	Socket Hexagon Wrench 6	MANUAL TRANSAXLE ASSY(C59)
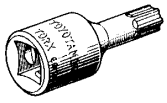	09042–00010	Torx Socket T30	FLOOR SHIFT CABLE TRANSMISSION CONTROL SHIFT FLOOR SHIFT CABLE TRANSMISSION CONTROL SELECT
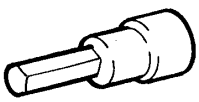	(09043–20060)	Socket Hexagon Wrench 6	MANUAL TRANSAXLE ASSY(C59)
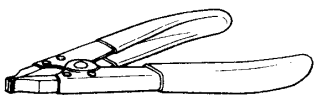	09905–00012	Snap Ring No.1 Expander	MANUAL TRANSAXLE ASSY(C59)

Equipment

Dial indicator	
Feeler gauge	
Micrometer	
Torque wrench	
Slide calipers	

Lubricant

Item	Capacity	Classification
C59 Manual transaxle oil (w/ Differential oil)	1.9 liters (2.0 US qts, 1.7 lmp. qts)	API GL–4 or GL–5 SAE 75W–90

PARKING BRAKE

021CD–01

PREPARATION

SST

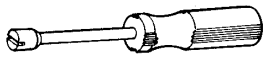	09718–00010 Shoe Hold Down Spring Driver	PARKING BRAKE CABLE ASSY NO.3

Equipment

Torque wrench	

POWER STEERING

021CB–01

PREPARATION

SST

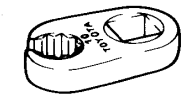	09023–38200	Union Nut Wrench 12mm	RACK & PINION POWER STEERING GEAR ASSY
	09023–38400	Union Nut Wrench 14mm	VANE PUMP ASSY RACK & PINION POWER STEERING GEAR ASSY
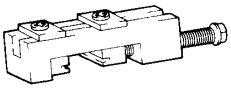	09521–24010	Rear Axle Shaft Puller	RACK & PINION POWER STEERING GEAR ASSY
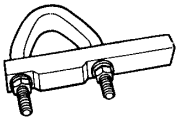	09612–00012	Rack & Pinion Steering Rack Housing Stand	RACK & PINION POWER STEERING GEAR ASSY
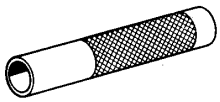	09612–22011	Tilt Handle Bearing Replacer	RACK & PINION POWER STEERING GEAR ASSY
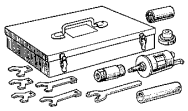	09612–24014	Steering Gear Housing Overhaul Tool Set	RACK & PINION POWER STEERING GEAR ASSY
	(09612–10061)	Steering Pinion Bearing Replacer	RACK & PINION POWER STEERING GEAR ASSY
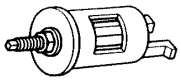	(09613–22011)	Steering Rack Shaft Bushing Puller	RACK & PINION POWER STEERING GEAR ASSY
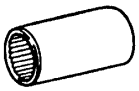	09616–00011	Steering Worm Bearing Adjusting Socket	RACK & PINION POWER STEERING GEAR ASSY
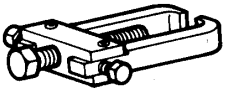	09628–62011	Boll Joint Puller	RACK & PINION POWER STEERING GEAR ASSY
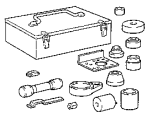	09630–00014	Power Steering Gear Housing Overhaul Tool Set	VANE PUMP ASSY
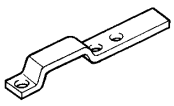	(09631–00132)	Vane Pump Bracket	VANE PUMP ASSY

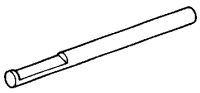	09631–10030	Oil Seal Remover	VANE PUMP ASSY
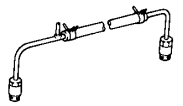	09631–12071	Steering Rack Oil Seal Test Tool	RACK & PINION POWER STEERING GEAR ASSY
	(09633–00010)	Packing	RACK & PINION POWER STEERING GEAR ASSY
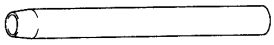	09631–16020	Steering Rack Cover ”A”	RACK & PINION POWER STEERING GEAR ASSY
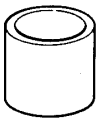	09631–20081	Seal Ring Tool	RACK & PINION POWER STEERING GEAR ASSY
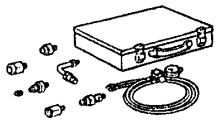	09640–10010	Power Steering Pressure Gauge Set	POWER STEERING SYSTEM
	(09641–01010)	Gauge Assy	POWER STEERING SYSTEM
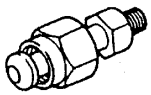	(09641–01020)	Attachment A	POWER STEERING SYSTEM
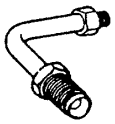	(09641–01030)	Attachment B	POWER STEERING SYSTEM
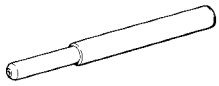	09670–00010	Front Crossmember Guide Tool	RACK & PINION POWER STEERING GEAR ASSY
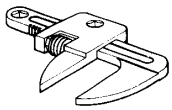	09922–10010	Variable Open Wrench	RACK & PINION POWER STEERING GEAR ASSY
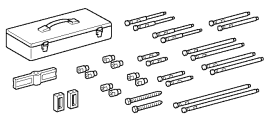	09950–50013	Puller C Set	RACK & PINION POWER STEERING GEAR ASSY
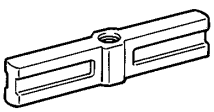	(09951–05010)	Hanger 150	RACK & PINION POWER STEERING GEAR ASSY

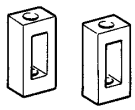	(09952–05010)	Slide Arm	RACK & PINION POWER STEERING GEAR ASSY
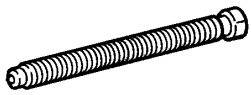	(09953–05020)	Center Bolt 150	RACK & PINION POWER STEERING GEAR ASSY
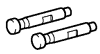	(09954–05021)	Claw No.2	RACK & PINION POWER STEERING GEAR ASSY
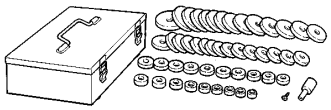	09950–60010	Replacer Set	VANE PUMP ASSY RACK & PINION POWER STEERING GEAR ASSY
	(09951–00180)	Replacer 18	RACK & PINION POWER STEERING GEAR ASSY
	(09951–00190)	Replacer 19	RACK & PINION POWER STEERING GEAR ASSY
	(09951–00220)	Replacer 22	RACK & PINION POWER STEERING GEAR ASSY
	(09951–00240)	Replacer 24	RACK & PINION POWER STEERING GEAR ASSY
	(09951–00260)	Replacer 26	RACK & PINION POWER STEERING GEAR ASSY
	(09951–00280)	Replacer 28	VANE PUMP ASSY RACK & PINION POWER STEERING GEAR ASSY
	(09951–00320)	Replacer 32	RACK & PINION POWER STEERING GEAR ASSY
	(09951–00360)	Replacer 36	RACK & PINION POWER STEERING GEAR ASSY
	(09951–00400)	Replacer 40	RACK & PINION POWER STEERING GEAR ASSY

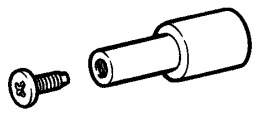	(09952–06010)	Adapter	RACK & PINION POWER STEERING GEAR ASSY
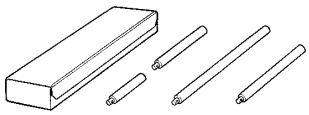	09950–70010	Handle Set	VANE PUMP ASSY RACK & PINION POWER STEERING GEAR ASSY
	(09951–07100)	Handle 100	VANE PUMP ASSY RACK & PINION POWER STEERING GEAR ASSY
	(09951–07150)	Handle 150	RACK & PINION POWER STEERING GEAR ASSY
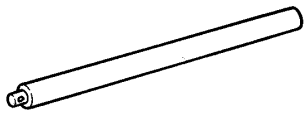	(09951–07360)	Handle 360	RACK & PINION POWER STEERING GEAR ASSY

Recomended Tools

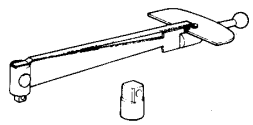	09025–00010	Torque Wrench (30 kgf–cm)	VANE PUMP ASSY RACK & PINION POWER STEERING GEAR ASSY
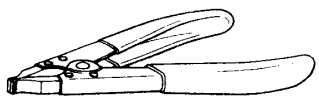	09905–00012	Snap Ring No.1 Expander	VANE PUMP ASSY

Equipment

Caliper gauge	Vane pump assy
Vernier calipers	Vane pump assy
Dial indicator	Steering gear assy
Feeler gauge	Vane pump assy
Micrometer	Vane pump assy
Torque wrench	

Lubricant

Item	Capacity	Classification
Power steering fluid (Total)	0.8 liters (0.9 US qts, 0.7 lmp.qts)	ATF DEXRON® II or III

SSM

	08833–00080	Adhesive 1344 THREE BOND 1344 LOCTITE 242 or equivalent	RACK & PINION POWER STEERING GEAR ASSY

EMISSION CONTROL

021BN–01

PREPARATION

SST

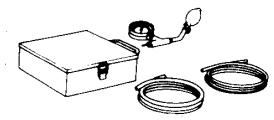	09992–00242 Turbocharger Pressure Gauge	EMISSION CONTROL SYSTEM

Equipment

Service Wire Harness	
Ohmmeter	
Vacuum gauge	

STARTING & CHARGING

022UA–01

PREPARATION

SST

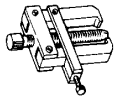	09286–46011	Injection Pump Spline Shaft Puller	GENERATOR ASSY
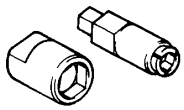	09820–63010	Alternator Pulley Set Nut Wrench Set	GENERATOR ASSY
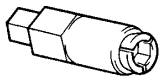	(09820–06010)	Alternator Rotor Shaft Wrench	GENERATOR ASSY
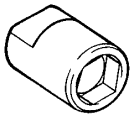	(09820–06020)	Alternator Pulley Set Nut 22 mm Wrench	GENERATOR ASSY

Recomended Tools

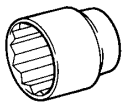	09011–12291	Socket Wrench for 29 mm .	GENERATOR ASSY
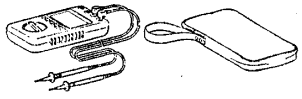	09082–00040	TOYOTA Electrical Tester	STARTING SYSTEM STARTER ASSY GENERATOR ASSY STARTING SYSTEM(April, 2003) STARTER ASSY(April, 2003)
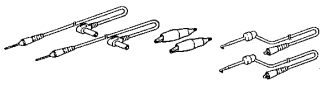	(09083–00150)	Test Lead Set	STARTING SYSTEM GENERATOR ASSY STARTING SYSTEM(April, 2003) STARTER ASSY(April, 2003)

Equipment

Service wire harness	
Ohmmeter	
Torque wrench	
Vernier calipers	
Slide calipers	
Wooden block	

REAR SUSPENSION

PREPARATION

021BV–01

SST

	09710–04101	Base	REAR AXLE BEAM ASSY
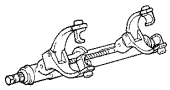	09727–30021	Coil Spring Compressor	REAR SHOCK ABSORBER WITH COIL SPRING
	09950–40011	Puller B Set	REAR AXLE BEAM ASSY
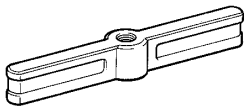	(09951–04020)	Hanger 200	REAR AXLE BEAM ASSY
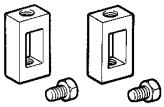	(09952–04010)	Slide Arm	REAR AXLE BEAM ASSY
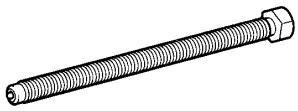	(09953–04030)	Center Bolt 200	REAR AXLE BEAM ASSY
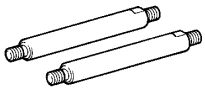	(09954–04020)	Arm 100	REAR AXLE BEAM ASSY
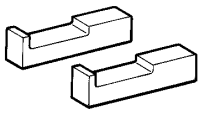	(09955–04051)	Claw No.5	REAR AXLE BEAM ASSY
	(09957–04010)	Attachment	REAR AXLE BEAM ASSY
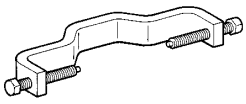	(09958–04011)	Holder	REAR AXLE BEAM ASSY
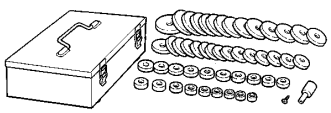	09950–60010	Replacer Set	REAR AXLE BEAM ASSY
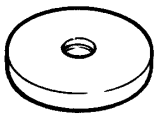	(09951–00620)	Replacer 62	REAR AXLE BEAM ASSY

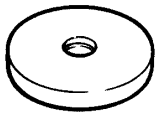	(09951–00630)	Replacer 63	REAR AXLE BEAM ASSY

Recomended Tools

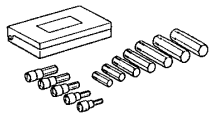	09040–00011	Hexagon Wrench Set	REAR SHOCK ABSORBER WITH COIL SPRING
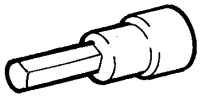	(09043–20060)	Socket Hexagon Wrench 6	REAR SHOCK ABSORBER WITH COIL SPRING

Equipment

Torque wrench	
Dial indicator with magnetic base	
Wheel balancer	
Tire pressure gauge	
Alignment tester	
Toe–in gauge	
Camber–caster–kingpin gauge	
Drill	

SEAT

021BX–01

PREPARATION

Equipment

Hog ring pliers	
Hog ring	
Torque wrench	
Tape	To avoid surface damage

SEAT BELT

021C3–02

PREPARATION

SST

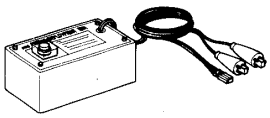	09082–00700	SRS Airbag Deployment Tool	FRONT SEAT BELT
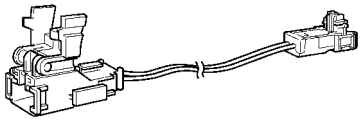	09082–00770	Airbag Deployment Wire Sub–harness No.5	FRONT SEAT BELT

Equipment

Torque wrench	

SLIDING ROOF/CONVERTIBLE

021C9–02

PREPARATION

Recomended Tools

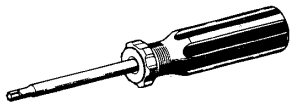	09041–00020	Torx Driver T25	SLIDING ROOF HOUSING SUB–ASSY
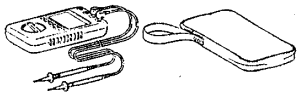	09082–00040	TOYOTA Electrical Tester	SLIDING ROOF SYSTEM

Equipment

Torque wrench	

SUPPLEMENTAL RESTRAINT SYSTEM

022XY–01

PREPARATION

SST

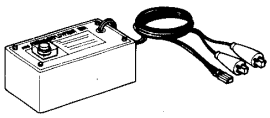	09082–00700	SRS Airbag Deployment Tool	FRONT SEAT AIRBAG ASSY RH INSTRUMENT PANEL PASSENGER AIR BAG ASSY HORN BUTTON ASSY(April, 2003)
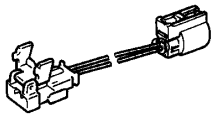	09082–00750	Airbag Deployment Wire Sub–harness No.3	FRONT SEAT AIRBAG ASSY RH
	09082–00780	Airbag Deployment Wire Sub–harness No.6	HORN BUTTON ASSY(April, 2003)
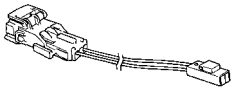	(09082–10801)	Wire A	INSTRUMENT PANEL PASSENGER AIR BAG ASSY HORN BUTTON ASSY(April, 2003)
	(09082–30801)	Wire C	INSTRUMENT PANEL PASSENGER AIR BAG ASSY HORN BUTTON ASSY(April, 2003)
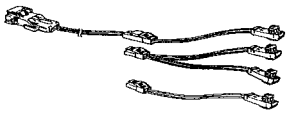	09082–00802	Airbag Deployment Wire Sub–Harness No. 8	HORN BUTTON ASSY(April, 2003)
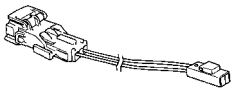	(09082–10801)	Wire A	INSTRUMENT PANEL PASSENGER AIR BAG ASSY HORN BUTTON ASSY(April, 2003)
	(09082–30801)	Wire C	INSTRUMENT PANEL PASSENGER AIR BAG ASSY HORN BUTTON ASSY(April, 2003)
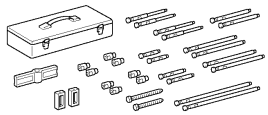	09950–50013	Puller C Set	SPIRAL CABLE SUB–ASSY
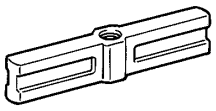	(09951–05010)	Hanger 150	SPIRAL CABLE SUB–ASSY
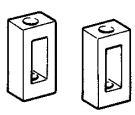	(09952–05010)	Slide Arm	SPIRAL CABLE SUB–ASSY
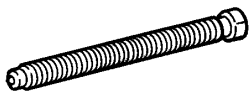	(09953–05020)	Center Bolt 150	SPIRAL CABLE SUB–ASSY

(09954–05021) Claw No.2 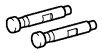	SPIRAL CABLE SUB–ASSY

Recomended Tools

09042–00010 Torx Socket T30 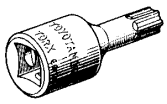	SPIRAL CABLE SUB–ASSY

Equipment

Torque wrench	
Bolt Length: 35.0 mm (1.387 in.) Pitch: 1.0 mm (0.039 in.) Diam.: 6.0 mm (0.236 in.)	Airbag disposal
Tire Width: 185 mm (7.28 in.) Inner diam.: 360 mm (14.17 in.)	Airbag disposal
Tire with disc wheel Width: 185 mm (7.28 in.) Inner diam.: 360 mm (14.17 in.)	Airbag disposal
Vinyl bag	Airbag disposal

STEERING COLUMN

021CA–01

PREPARATION

SST

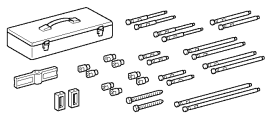	09950–50013	Puller C Set	STEERING COLUMN ASSY
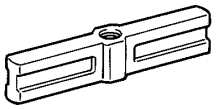	(09951–05010)	Hanger 150	STEERING COLUMN ASSY
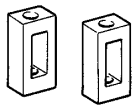	(09952–05010)	Slide Arm	STEERING COLUMN ASSY
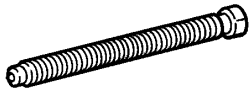	(09953–05020)	Center Bolt 150	STEERING COLUMN ASSY
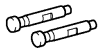	(09954–05021)	Claw No.2	STEERING COLUMN ASSY

Recomended Tools

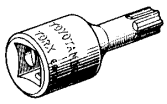	09042–00010	Torx Socket T30	STEERING COLUMN ASSY

Equipment

Torque wrench	

THEFT DETERRENT & DOOR LOCK

021CN–01

PREPARATION

Recomended Tools

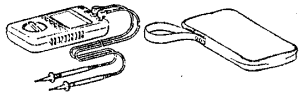	09082–00040 TOYOTA Electrical Tester	POWER DOOR LOCK CONTROL SYSTEM

TIRE&WHEEL

021C4–01

PREPARATION

Equipment

Tire pressure gauge	
Dial indicator with magnetic base	
Wheel balancer	

VEHICLE CONTROL SYSTEM

021CP–01

PREPARATION

Recomended Tools

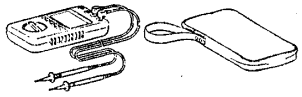	09082–00040 TOYOTA Electrical Tester	IGNITION OR STARTER SWITCH ASSY

WINDSHIELD/WINDOWGLASS/MIRROR

021CG–01

PREPARATION

Recomended Tools

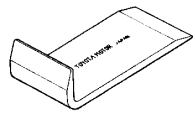	09070–20010	Moulding Remover	WINDSHIELD GLASS
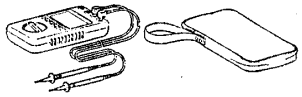	09082–00040	TOYOTA Electrical Tester	WINDOW DEFOGGER SYSTEM POWER MIRROR CONTROL SYSTEM POWER WINDOW CONTROL SYSTEM
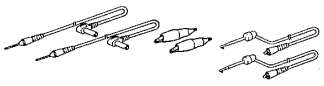	(09083–00150)	Test Lead Set	POWER WINDOW CONTROL SYSTEM

Equipment

Adhesive	
Knife	
Piano wire	Windshield
Plastic sheet	To avoid surface damage.
Sealer gun	
Torque wrench	
Tape	To avoid surface damage.
Wooden block or similar object	For tying both piano wire ends

SSM

	08833–00030	Three cement black or equivalent	WINDSHIELD GLASS BACK WINDOW GLASS
	08850–00801	Windshield Glass Adhesive Set or equivalent	WINDSHIELD GLASS BACK WINDOW GLASS

WIPER & WASHER

021C7–01

PREPARATION

SST

	09843–18040	Diagnosis Check Wire No.2	WIPER AND WASHER SYSTEM

Recomended Tools

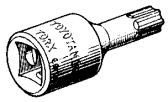	09042–00010	Torx Socket T30	WINDSHIELD WIPER MOTOR ASSY
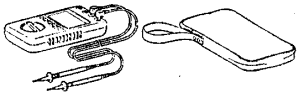	09082–00040	TOYOTA Electrical Tester	WIPER AND WASHER SYSTEM
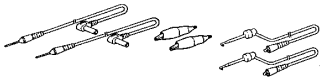	(09083–00150)	Test Lead Set	WIPER AND WASHER SYSTEM

Equipment

Torque wrench	

AUDIO & VISUAL SYSTEM

030PN–01

TORQUE SPECIFICATION

Part Tightened	N·m	kgf·cm	ft·lbf
Amplifier antenna assy x Antenna nut	4.5	46	40 in.·lbf

AUTOMATIC TRANSMISSION / TRANSAXLE

0305K–06

SERVICE DATA

A245E		
Line pressure (Wheel locked)		
	Engine idling	
	D position	382 – 422 kPa (3.9 – 4.3 kgf/cm^2, 55 – 61 psi)
	R position	647 – 760 kPa (6.6 – 7.8 kgf/cm^2, 94 – 111 psi)
	At stall (Throttle valve fully opened)	
	D position	713 – 844 kPa (7.27 – 8.61 kgf/cm^2, 103 – 122 psi)
	R position	1,520 – 1,755 kPa (15.5 – 17.9 kgf/cm^2, 220 – 254 psi)
Engine stall revolution	D and R positions	2,550 ± 150 rpm
Time lag	N → D position	Less than 1.2 seconds
	N → R position	Less than 1.5 seconds
Engine idle speed (A/C OFF)	N position	650 ± 50 rpm
Drive plate runout	Max.	0.20 mm (0.0079 in.)
Differential oil seal drive in depth	LH side	5.3 ± 0.5 mm (0.209 ± 0.020 in.)
	RH side	2.0 ± 0.5 mm (0.079 ± 0.020 in.)
Shift schedule		
D position		
(Throttle valve fully opened)	1 → 2	59 – 68 km/h (37 – 42 mph)
	2 → 3	111 – 122 km/h (69 – 76 mph)
	3 → O/D	173 – 191 km/h (108 – 119 mph)
	O/D → 3	165 – 183 km/h (103 – 114 mph)
	3 → 2	103 – 114 km/h (64 – 71 mph)
	2 → 1	41 – 48 km/h (25 – 30 mph)
(Throttle valve fully closed)	3 → O/D	35 – 42 km/h (22 – 26 mph)
	O/D → 3	16 – 22 km/h (10 – 14 mph)
2 position		
(Throttle valve fully opened)	1 → 2	59 – 68 km/h (37 – 42 mph)
	3 → 2	105 – 116 km/h (65 – 72 mph)
	2 → 1	41 – 48 km/h (25– 30 mph)
L position		
(Throttle valve fully opened)	2 → 1	49 – 57 km/h (30 – 35 mph)
Lock–up point	Throttle valve opening 5 %	
3rd gear (O/D main switch OFF)	Lock–up ON	68 – 77 km/h (42 – 48 mph)
	Lock–up OFF	61 – 69 km/h (38– 43 mph)
O/D gear	Lock–up ON	61 – 69 km/h (38 – 43 mph)
	Lock–up OFF	54 – 62 km/h (34 – 39 mph)

0305L–06

TORQUE SPECIFICATION

Part Tightened		N·m	kgf·cm	ft·lbf
Park/neutral position switch x Transaxle	Bolt	5.5	56	49 in.·lbf
	Nut	5.5	56	49 in.·lbf
Control shaft lever x Park/neutral position switch		12.5	127	9
Battery carrier x Body		13	132	10
Engine hanger x Engine		38	387	28
Drain plug x Oil pan		17.5	178	13
Transaxle x Engine	Bolt A:	64	650	47
	Bolt B:	46	470	34
	Bolt C:	23	235	17
Torque converter clutch x Drive plate		28	285	20
Engine mounting bracket RR x Transaxle		64	652	47
Center member x Body	Bolt A:	39	398	29
	Bolt B:	52	530	38
Engine mounting insulator RR x Engine mounting bracket RR		87	887	64
Engine mounting insulator RR x Suspension member		52	530	38
Engine mounting insulator FR x Engine mounting bracket FR		52	530	38
Engine mounting bracket LH x Transaxle		52	530	38
Engine mounting insulator LH x Body	Bolt A:	52	530	38
Engine mounting insulator LH x Engine mounting bracket LH	Nut B:	80	815	59
Engine mounting bracket FR x Transaxle		64	652	47
Starter x Transaxle		39	400	29
Starter wire x Starter		13	132	10
Transmission case protector x Transaxle		18	182	14
Oil filler tube x Transaxle		5.5	56	49 in.·lbf
Oil cooler tube clamp x Oil filler tube		5.5	56	49 in.·lbf
Oil cooler outlet tube x Transaxle		34.5	350	25
Oil cooler inlet tube x Transaxle		34.5	350	25
Wire harness clamp bracket x Transaxle		12.75	130	9
Wire harness x Transaxle	Bolt A:	25.5	260	19
	Bolt B:	10	102	7
	Bolt C:	13	132	10
Control cable bracket x Transaxle		12	122	9
Control cable support x Transaxle		12	122	9
Air cleaner assy x Body		7.0	71	62 in.·lbf
Cylinder head cover No. 2 x Engine		7.0	71	62 in.·lbf
Speedometer sensor x Transaxle		11.3	115	9
Solenoid valve x Valve body	Bolt A:	11	110	8
	Bolt B:	11	110	8
	Bolt C:	6.5	66	58 in.·lbf
Valve body x Transaxle		10	100	7
Manual detent spring x Valve body		10	100	7
Oil strainer x Valve body		10	100	7
Oil pan x Transaxle		5.3	55	48 in.·lbf
Transmission wire x Transaxle		5.4	55	48
Floor shift assy x Body		12	122	9
Control cable x Control shaft lever		12	122	9
Control cable x Body	Bolt	5.0	50	43 in.·lbf
	Nut	12	122	9

BRAKE

SERVICE DATA

030Q4–01

Brake pedal height (from asphalt sheet)	M/T A/T	134.9 – 144.9 mm (5.311 – 5.703 in.) 136.0 – 146.0 mm (5.353 – 5.747 in.)
Brake Pedal free play		1 – 6 mm (0.04 – 0.24 in.)
Stop light switch clearance		0.5 – 2.4 mm (0.020 – 0.094 in.)
Pedal reserve distance from asphalt sheet at 490 N (50 kgf, 110.2 lbf)		More than 70 mm (2.76 in.)
Brake booster push rod to piston clearance (w/ SST)		0 mm (0 in.)
Front brake pad thickness	Standard Minimum	11.0 mm (0.433 in.) 1.0 mm (0.039 in.)
Front brake disc thickness	Standard Minimum	25.0 mm (0.984 in.) 23.0 mm (0.906 in.)
Front brake disc runout	Maximum	0.05 mm (0.0020 in.)
Rear brake drum inside diameter	Standard Maximum	200.0 mm (7.874 in.) 201.0 mm (7.913 in.)
Rear brake shoe lining thickness	Standard Maximum	4.4 mm (0.173 in.) 1.0 mm (0.039 in.)

030Q5–01

TORQUE SPECIFICATION

Part Tightened	N·m	kgf·cm	ft·lbf
Bleeder plug	8.3	85	74 in.·lbf
Brake booster clevis lock nut	26	265	19
Brake pedal support sub–assy x Brake pedal sub–assy	36.8	375	27
Brake booster x Body	12.7	130	9
Brake pedal support sub–assy x Body	23.6	240	17
Brake master cylinder x Piston stopper bolt	10	102	7
Brake master cylinder x Reservoir	1.8	18.4	15.9 in.·lbf
Brake master cylinder x Brake booster	12.5	127	9
Brake line union nut	15.2	155	11
Wheel nut	103	1,050	76
Cruise control actuator bracket x Body	43	438	32
Front brake cylinder mounting x Steering knuckle	106.8	1,089	79
Front brake cylinder x Front brake cylinder mounting	34.3	350	25
Front disc brake caliper x Flexible hose	29	296	21
Rear drum brake wheel cylinder x Backing plate	10	102	7
Proportioning valve assy x Body	5.4	55	48 in.·lbf
Brake actuator assy x Actuator bracket	4.7	48	42 in.·lbf
Brake actuator bracket x Body	19	194	14
Front speed sensor x Steering knuckle	8.0	82	71 in.·lbf
Front speed sensor wire harness clamp x Shock absorber	29	296	21
Front speed sensor wire harness clamp x Body	8.0	82	71 in.·lbf

CLUTCH

030EF–02

SERVICE DATA

Pedal height from asphalt sheet		135.8 – 145.8 mm (5.346 – 5.740 in.)
Clutch pedal free play		5.0 – 15.0 mm (0.197 – 0591 in.)
Clutch pedal push rod play at pedal top		1.0 – 5.0 mm (0.039 – 0.197 in.)
Slotted spring pin protrusion	Maximum	1.5 – 3.5 mm (0.059 – 0.138 in.)
Disc rivet head depth	Maximum	0.3 mm (0.012 in.)
Disc runout	Minimum	0.8 mm (0.031 in.)
Diaphragm spring finger wear	Maximum depth: Maximum width:	0.5 mm (0.020 in.) 6.0 mm (0.236 in.)
Flywheel sub–assy runout	Maximum	0.1 mm (0.004 in.)
Diaphragm spring finger wear	Maximum depth	0.5 mm (0.020 in.)
Clutch release point from pedal full stroke end position		25 mm (0.98 in.) or more

030EG–02

TORQUE SPECIFICATION

Part Tightened	N·m	kgf·cm	ft·lbf
Clutch pedal sub–assy x Clutch pedal support	36.8	375	27
Clutch pedal support set bolt x Body	19.1	195	14
Cylinder push rod clevis lock nut	24.5	245	18
Clutch master cylinder assy x Clutch pedal support	11.8	120	9
Clutch master cylinder assy x Flexible hose tube	15.2	155	11
Release cylinder bleeder plug	8.4	85	74 in.·lbf
Clutch release cylinder assy x Transaxle housing	11.8	120	9
Clutch release cylinder assy x Flexible hose tube	15.2	155	11
Flexible hose tube bracket x Flexible hose tube	5.0	51	44 in.·lbf
Clutch cover assy x Flywheel sub–assy	19.1	195	14
Release fork support x Transaxle assy	36.8	375	27
Clutch start switch assy set nut	15.68	160	12

COOLING

030PJ–03

SERVICE DATA

Thermostat		
Valve opening temperature		80 to 84°C (176 to 183°F)
Valve lift	at 95°C (203°F)	10 mm (0.39 in.) or more
Radiator cap sub–assy		
Standard opening pressure		74 to 103 kPa (0.75 to 1.05 kgf/cm^2, 10.7 to 14.9 psi)
Minimum opening pressure		59 kPa (0.6 kgf/cm^2, 8.5 psi)
Cooling fan		
Standard amperage	at 20°C (68°F)	8 to 12 A
Cooling fan		
Resistance	at 20°C (68°F)	1.17 to 1.43 Ω

030PK–04

TORQUE SPECIFICATION

Part Tightened		N·m	kgf·cm	ft·lbf
Water pump assy x Cylinder block sub–assy	Bolt A	9.0	92	80 in. lbf
(See page 16–8)	Bolt B	11	113	8
Generator assy x Engine	12 mm head	25	250	18
(See page 19–16)	14 mm head	54	550	39
Water inlet x Cylinder block sub–assy		11	113	8

CRUISE CONTROL

030OV–01

SERVICE DATA

Accelerator auto drive cable clearance	Standard	2 – 6 mm (0.079 – 0.236 in.)

030PO–01

TORQUE SPECIFICATION

Part Tightened	N·m	kgf·cm	ft·lbf
Cruise control actuator assy x Cruise control bracket	6.0	60	52 in.·lbf

DRIVE SHAFT / PROPELLER SHAFT / AXLE

030PW–01

SERVICE DATA

Front axle hub bearing	Backlash	Maximum: 0.05 mm (0.0020 in.)
Front axle hub sub–assy	Deviation	Maximum: 0.05 mm (0.0020 in.)
Rear axle hub & bearing assy	Backlash Deviation	Maximum: 0.05 mm (0.0020 in.) Maximum: 0.07 mm (0.0028 in.)

030PX–01

TORQUE SPECIFICATION

Part Tightened	N·m	kgf·cm	ft·lbf
Front wheel set nut	103	1,050	76
Rear wheel set nut	103	1,050	76
Manual transaxle oil drain plug	39.2	400	29
Automatic transaxle fluid drain plug	17.5	178	13
Lower ball joint assy front x Suspension arm sub–assy lower No.1	89	908	66
Tie rod end sub–assy x Steering knuckle	49	500	36
Flexible hose and speed sensor front x Shock absorber assy front	29	296	21
Speed sensor front x Steering knuckle	8.0	82	71 in.·lbf
Front stabilizer link assy x Shock absorber assy front	74	755	55
Front axle hub nut	216	2,200	159
Disc brake dust cover front x Steering knuckle	8.3	85	73 in.·lbf
Lower ball joint assy front x Steering knuckle	103	1,050	76
Front axle assy x Shock absorber assy front	153	1,560	113
Front disc brake caliper assy x Steering knuckle	106.8	1,089	79
Rear axle hub & bearing assy x Rear axle beam	61	622	45

EMISSION CONTROL

030PI–01

SERVICE DATA

Oxyzen sensor Resistance HT – +B	11 – 16 Ω
VSV for Pressure switching valve Resistance at 20°C (68°F)	37 – 44 Ω
Vacuum switching valve No.1 Resistance at 20 °C (68 °F)	27 – 33 Ω
Vacuum switching valve assy No. 1 Resistance at 20°C (68°F)	25 – 30 Ω

ENGINE CONTROL SYSTEM

030P8–03

SERVICE DATA

Throttle idle speed control valve assy		
Movement	Ignition switch ON	Half open → fully close → fully open → half open
Intake air flow meter sub–assy		
Resistance	THA – E2	
	at –20°C (–4°F)	13.6 to 18.4 kΩ
	at 20°C (68°F)	2.21 to 2.69 kΩ
	at 60°C (140°F)	0.49 to 0.67 kΩ
Camshaft timing oil control valve assy		
Resistance	at 20°C (68°F)	6.9 to 7.9 Ω
E.F.I. Throttle position sensor		
Resistance	VC – E2	2.5 to 6.0 kΩ
E.F.I. Engine coolant temperature sensor		
Resistance	at 20°C (68°F)	2.32 to 2.59 kΩ
	at 80°C (176°F)	0.310 to 0.326 kΩ
Knock control sensor		
Resistance	at 20°C (68°F)	120 to 280 kΩ
E.F.I. Circuit opening relay assy		
Specified condition	Between terminals 1 and 2	Continuity
	Between terminals 3 and 5	No continuity
E.F.I. ECU relay		
Specified condition	Between terminals 1 and 2	Continuity
	Between terminals 3 and 5	No continuity

030P9–03

TORQUE SPECIFICATION

Part Tightened	N·m	kgf·cm	ft·lbf
Throttle body idle speed control valve assy x Throttle body assy	3.7	38	33 in.·lbf
E.F.I. Throttle position sensor x Throttle body assy	2.0	20	18 in.·lbf
Accelerator Control cable bracket sub–assy x Throttle body assy	13	133	9.6
Throttle body assy x Intake manifold	30	306	22
Throttle body bracket x Cylinder head sub–assy	30	306	22
Manifold stay No. 2 x Throttle body assy M/T	13	133	9.6
Cylinder head cover No. 2 x Cylinder head cover sub–assy	7.0	71	62 in.·lbf
ECM bracket No. 3 x ECM	3.2	33	28 in.·lbf
ECM bracket No. 2 x ECM	3.2	33	28 in.·lbf
ECM bracket No. 1 x ECM	3.2	33	28 in.·lbf
ECM x Blower assy	3.0	31	27 in.·lbf
Battery negative terminal x Battery	5.4	55	48 in.·lbf

ENGINE MECHANICAL

030P0–02

SERVICE DATA

Ignition timing	w/ Terminal TC and CG of DLC3 connected	8 to 12°BTDC
	w/ Terminal TC and CG of DLC3 disconnected	10 to 18°BTDC
Idle speed		650 to 750 rpm
Compression pressure		1,300 kPa (13.3 kgf·cm^2, 189 psi)
Minimum pressure		1,000 kPa (10.2 kgf·cm^2, 145 psi)
Difference between each cylinder		100 kPa (1.0 kgf·cm^2, 15 psi)
Valve clearance at cold	Intake	0.15 to 0.25 mm (0.0059 to 0.0098 in.)
	Exhaust	0.25 to 0.35 mm (0.0098 to 0.0138 in.)
Chain elongation	Maximum	122.6 mm (4.827 in.)
Camshaft timing gear diameter (w/ chain)	Minimum	97.3 mm (3.831 in.)
Crankshaft timing gear diameter (w/ chain)	Minimum	51.6 mm (2.031 in.)
Chain tensioner slipper wear	Maximum	1.0 mm (0.039 in.)
Chain vibration damper wear	Maximum	1.0 mm (0.039 in.)
Cylinder head set bolt length	Standard	146.8 to 148.2 mm (5.780 to 5.835 in.)
	Maximum	148.5 mm (5.846 in.)
Camshaft		
Circle runout	Maximum	0.03 mm (0.0012 in.)
Cam lobe height	Standard Intake	44.333 to 44.433 mm (1.7454 to 1.7493 in.)
	Exhaust	43.761 to 43.861 mm (1.7229 to 1.7268 in.)
	Minimum Intake	44.18 mm (1.7394 in.)
	Exhaust	43.61 mm (1.7169 in.)
Journal diameter	No. 1	34.449 to 34.465 mm (1.3563 to 1.3569 in.)
	Others	22.949 to 22.965 mm (0.9035 to 0.9041 in.)
Cylinder head warpage	Cylinder block side	0.05 mm (0.0020 in.)
	Intake manifold side	0.10 mm (0.0039 in.)
	Exhaust manifold side	0.10 mm (0.0039 in.)
Camshaft thrust clearance	Standard	0.040 to 0.095 mm (0.0016 to 0.0037 in.)
	Maximum	0.110 mm (0.0043 in.)
Camshaft oil clearance	Standard	0.035 to 0.072 mm (0.0014 to 0.0028 in.)
	Maximum	0.10 mm (0.0039 in.)
Valve lifter diameter		30.966 to 30.976 mm (1.2191 to 1.2195 in.)
Valve lifter bore diameter		31.000 to 31.025 mm (1.2205 to 1.2215 in.)
Valve lifter oil clearance	Standard	0.024 to 0.059 mm (0.0009 to 0.0023 in.)
	Maximum	0.079 mm (0.0031 in.)
Inner compression spring		
Free length		43.40 mm (1.7087 in.)
Deviation	Maximum	1.6 mm (0.063 in.)
Angle (reference)	Maximum	2°
Installed tension	at 33.6 mm (1.323 in.)	158.6 to 175.4 N (16.2 to 17.9 kgf, 35.7 to 39.5 lbf)
Maximum working tension	at 24.1 mm (0.949 in.)	335.3 to 370.7 N (34.2 to 37.8 kgf, 75.4 to 83.3 lbf)
Valve		
Overall length	Standard Intake	88.65 mm (3.4902 in.)
	Exhaust	88.69 mm (3.4917 in.)
	Minimum Intake	88.35 mm (3.4784 in.)
	Exhaust	88.39 mm (3.4799 in.)
Valve stem diameter	Intake	5.470 to 5.485 mm (0.2154 to 0.2159 in.)
	Exhaust	5.465 to 5.480 mm (0.2152 to 0.2158 in.)
Margin thickness	Standard	1.0 mm (0.039 in.)
	Minimum	0.7 mm (0.028 in.)
Valve guide bush inside diameter		5.510 to 5.530 mm (0.2169 to 0.2177 in.)
Valve guide bush oil clearance	Standard Intake	0.025 to 0.060 mm (0.0010 to 0.0024 in.)
	Exhaust	0.030 to 0.065 mm (0.0012 to 0.0026 in.)
	Maximum Intake	0.08 mm (0.0032 in.)
	Exhaust	0.10 mm (0.0039 in.)

Valve guide bush bore diameter	STD	10.285 to 10.306 mm (0.4049 to 0.4058 in.)
	O/S 0.05	10.335 to 10.356 mm (0.4069 to 0.4077 in.)
Valve guide bush protrusion height		8.7 to 9.1 mm (0.343 to 0.358 in.)
Straight pin protrusion height (cylinder head)		5 mm (0.197 in.)
Union protrusion height	A	29 mm (1.142 in.)
(See page 14–134)	B	66.5 mm (2.618 in.)
	C	24 mm (0.945 in.)
Connecting rod thrust clearance	Standard	0.160 to 0.342 mm (0.0063 to 0.0135 in.)
	Maximum	0.342 mm (0.0135 in.)
Connecting rod oil clearance	Standard	0.028 to 0.060 mm (0.0011 to 0.0024 in.)
	Maximum	0.080 mm (0.0031 in.)
Connecting rod large end bore diameter	1	47.000 to 47.008 mm (1.8504 to 1.8507 in.)
	2	47.009 to 47.016 mm (1.8507 to 1.8510 in.)
	3	47.017 to 47.024 mm (1.8511 to 1.8513 in.)
Connecting rod bearing thickness	1	1.486 to 1.490 mm (0.0585 to 0.0587 in.)
	2	1.491 to 1.494 mm (0.0587 to 0.0588 in.)
	3	1.495 to 1.498 mm (0.0589 to 0.0590 in.)
Crankshaft pin outer diameter		43.992 to 44.000 mm (1.7320 to 1.7323 in.)
Crankshaft thrust clearance	Standard	0.04 to 0.24 mm (0.0016 to 0.0094 in.)
	Maximum	0.30 mm (0.0118 in.)
Cylinder block warpage	Maximum	0.05 mm (0.0020 in.)
Cylinder bore diameter	Standard	79.000 to 79.013 mm (3.1102 to 3.1107 in.)
	Difference limit	0.10 mm (0.0039 in.)
Piston diameter	at 25.6 mm (1.008 in.) from piston head	78.872 to 78.972 mm (3.1052 to 3.1091 in.)
Piston oil clearance	Standard	0.065 to 0.088 mm (0.0026 to 0.0035 in.)
	Maximum	0.088 mm (0.0035 in.)
Piston pin bore diameter	A	20.006 to 20.009 mm (0.7876 to 0.7878 in.)
	B	20.010 to 20.012 mm (0.7878 to 0.7879 in.)
	C	20.013 to 20.015 mm (0.7879 to 0.7880 in.)
Piston pin outer diameter	A	20.004 to 20.007 mm (0.7876 to 0.7877 in.)
	B	20.008 to 20.010 mm (0.7877 to 0.7878 in.)
	C	20.011 to 20.013 mm (0.7878 to 0.7879 in.)
Connecting rod small end bore diameter	A	20.012 to 20.015 mm (0.7879 to 0.7880 in.)
	B	20.016 to 20.018 mm (0.7880 to 0.7881 in.)
	C	20.019 to 20.021 mm (0.7881 to 0.7882 in.)
Piston pin oil clearance		
Piston pin x Piston	Standard	0.002 to 0.011 mm (0.0001 to 0.0004 in.)
	Maximum	0.011 mm (0.0004 in.)
Piston pin x Connecting rod	Standard	–0.001 to 0.017 mm (–0.00004 to 0.0007 in.)
	Maximum	0.017 mm (0.0007 in.)
Ring groove clearance	No. 1	0.02 to 0.07 mm (0.0008 to 0.0028 in.)
	No. 2	0.03 to 0.07 mm (0.0012 to 0.0028 in.)
	Oil	0.03 to 0.11 mm (0.0012 to 0.0043 in.)
Piston ring end gap	Standard No. 1	0.25 to 0.35 mm (0.0098 to 0.0138 in.)
	No. 2	0.35 to 0.50 mm (0.0138 to 0.0197 in.)
	Oil	0.15 to 0.40 mm (0.0059 to 0.157 in.)
	Maximum No. 1	1.05 mm (0.0413 in.)
	No. 2	1.20 mm (0.0472 in.)
Connecting rod		
Out–of–alignment	Maximum	0.05 mm (0.0020 in.) per 100 mm (3.94 in.)
Twist	Maximum	0.05 mm (0.0020 in.) per 100 mm (3.94 in.)
Connecting rod bolt diameter	Standard	6.6 to 6.7 mm (0.260 to 0.264 in.)
	Maximum	6.4 mm (0.252 in.)
Crankshaft		
Circle runout	Maximum	0.03 mm (0.0012 in.)
Main journal diameter		47.988 to 48.000 mm (1.8893 to 1.8898 in.)
Taper and out–of–round	Maximum	0.02 mm (0.0008 in.)
Crank pin diameter		43.992 to 44.000 mm (1.7320 to 1.7323 in.)
Taper and out–of–round	Maximum	0.02 mm (0.0008 in.)

Crankshaft bearing cap set bolt diameter	Standard Minimum	7.3 to 7.5 mm (0.287 to 0.295 in.) 7.3 mm (0.287 in.)
Crankshaft oil clearance	Standard Minimum	0.015 to 0.032 mm (0.0006 to 0.0013 in.) 0.05 mm (0.0020 in.)
Cylinder block journal bore diameter	0 1 2 3 4 5 6	52.000 to 52.002 mm (2.0472 to 2.0473 in.) 52.003 to 52.004 mm (2.0474 to 2.0474 in.) 52.005 to 52.006 mm (2.0474 to 2.0475 in.) 52.007 to 52.009 mm (2.0475 to 2.0476 in.) 52.010 to 52.011 mm (2.0476 to 2.0477 in.) 52.012 to 52.013 mm (2.0477 to 2.0478 in.) 52.014 to 52.015 mm (2.0478 to 2.0478 in.)
Crankshaft journal diameter	0 1 2 3 4 5	47.999 to 48.000 mm (1.8897 to 1.8898 in.) 47.997 to 47.998 mm (1.8896 to 1.8897 in.) 47.995 to 47.996 mm (1.8896 to 1.8896 in.) 47.993 to 47.994 mm (1.8895 to 1.8895 in.) 47.991 to 47.992 mm (1.8894 to 1.8894 in.) 47.988 to 47.990 mm (1.8893 to 1.8894 in.)
Standard bearing center wall thickness	1 2 3 4	1.994 to 1.997 mm (0.0785 to 0.0786 in.) 1.998 to 2.000 mm (0.0787 to 0.0787 in.) 2.001 to 2.003 mm (0.0788 to 0.0789 in.) 2.004 to 2.006 mm (0.0789 to 0.0790 in.)
Straight pin (cylinder block) (See page 14–147)	A B C D	5 mm (0.197 in.) 7.5 mm (0.295 in.) 12 mm (0.472 in.) 8 mm (0.315 in.)
Ring pin (cylinder block) (See page 14–147)	A B C	6 mm (0.236 in.) 7 mm (0.276 in.) 10 mm (0.394 in.)

030P1–02

TORQUE SPECIFICATION

Part Tightened		N·m	kgf·cm	ft·lbf
Cylinder head cover No. 2 x Cylinder head cover sub–assy		7.0	71	62 in.·lbf
Camshaft bearing cap No. 3 x Cylinder head sub–assy		13	133	10
Camshaft bearing cap No. 1 x Cylinder head sub–assy		23	235	17
Camshaft timing gear or sprocket x Camshaft No. 2		54	551	40
Chain tensioner assy No. 1 x Timing chain or belt cover sub–assy		9.0	92	80 in.·lbf
V–ribbed belt tensioner assy x Cylinder head sub–assy		29	296	21
V–ribbed belt tensioner assy x Cylinder block sub–assy		69	704	51
Engine mounting insulator RH x Body		52	530	38
Engine mounting insulator RH x Transverse engine engine mounting bracket		52	530	38
Cylinder head cover sub–assy x Cylinder head sub–assy (See page 14–5)	A B	11 9.0	112 92	8 80 in.·lbf
Cylinder head cover sub–assy x Timing chain or belt cover sub–assy		11	112	8
Ignition coil assy x Cylinder head cover sub–assy		9.0	92	80 in.·lbf
Engine wire x Cylinder head cover sub–assy		9.0	92	80 in.·lbf
Engine hanger x Cylinder head sub–assy		38	387	28
Radio setting condenser x Cylinder head sub–assy		10	102	7
Engine coolant temperature sensor x Cylinder head sub–assy		20	204	15
Exhaust manifold x Cylinder head sub–assy		37	377	27
Exhaust manifold heat insulator No. 1 x Exhaust manifold		18	184	13
Manifold stay x Exhaust manifold		49	500	36
Manifold stay x Cylinder block sub–assy		49	500	36
Knock sensor x Cylinder block sub–assy		20	204	15
Crankshaft position sensor x Timing chain or belt cover		9.0	92	80 in.·lbf
Camshaft position sensor x Cylinder head sub–assy		9.0	92	80 in.·lbf
Water inlet x Cylinder block sub–assy		11	112	8
Water by–pass pipe No. 1 x Cylinder block sub–assy		9.0	92	80 in.·lbf
Water by–pass pipe No. 1 x Cylinder head sub–assy		9.0	92	80 in.·lbf
Oil level gage guide x Water by–pass pipe No. 1		13	133	10
Intake manifold x Cylinder head sub–assy		30	306	22
Flywheel sub–assy x Crankshaft (see page 14–27)	1st 2nd	49 Turn 90°	500 Turn 90°	36 Turn 90°
Drive plate & ring gear sub–assy x Crankshaft		88	897	65
Transverse engine engine mounting bracket rear x Transverse engine engine mounting insulator rear TMMC, NUMMI made TAKAOKA, TAL made		 65 87	 663 887	 48 64
Transverse engine engine mounting bracket front x Transverse engine engine mounting insulator front		52	530	38
Transverse engine engine mounting bracket LH x Transverse engine engine mounting insulator LH		80	816	59
Transverse engine engine mounting bracket RH x Transverse engine engine mounting insulator RH		52	530	38
Front suspension crossmember sub–assy x Body (See page 14–27)	Front Rear	113 157	1,152 1,601	83 116
Engine mounting member sub–assy center x Body		39	398	29
Floor panel brace front x Body		30	306	22
Return tube sub–assy x Body (See page 14–27)	Bolt A Bolt B	5.0 7.8	51 80	44 in.·lbf 69 in.·lbf
Cruise control actuator x Cruise control bracket		6.0	61	53 in.·lbf
Air cleaner case x Body		7.0	71	62 in.·lbf
Air cleaner case x Transverse engine engine mounting bracket LH		7.0	71	62 in.·lbf

Part Tightened		N·m	kgf·cm	ft·lbf
Battery carrier x Body		13	133	10
Battery clamp sub–assy x Body		5.0	51	44 in.·lbf
Battery clamp sub–assy x Battery clamp bolt		3.5	36	31 in.·lbf
Radiator support upper x Body		19	194	14
Front wheel RH & LH x Front axle hub sub–assy RH & LH		103	1,050	76
Oil strainer sub–assy x Crankshaft bearing cap sub–assy		9.0	92	80 in.·lbf
Oil pan sub–assy x Crankshaft bearing cap sub–assy		9.0	92	80 in.·lbf
Oil pan drain plug x Oil pan sub–assy		37	377	27
Oil filter union x Crankshaft bearing cap sub–assy		30	306	22
Cylinder head sub–assy x Cylinder block sub–assy (See page 14–45)	1st 2nd	49 Turn 90°	500 Turn 90°	36 Turn 90°
Camshaft timing gear assy x Camshaft		54	551	40
Oil control valve filter x Cylinder head sub–assy		30	306	22
Camshaft timing oil control valve assy x Cylinder head sub–assy		9.0	92	80 in.·lbf
Oil pump assy x Cylinder block sub–assy		9.0	92	80 in.·lbf
Chain vibration damper No. 1 x Cylinder head sub–assy		9.0	92	80 in.·lbf
Chain vibration damper No. 1 x Cylinder block sub–assy		9.0	92	80 in.·lbf
Chain tensioner slipper x Cylinder block sub–assy		19	189	14
Stud bolt x Timing chain cover sub–assy		5.0	51	44 in.·lbf
Timing chain or belt cover sub–assy x Cylinder head sub–assy		13	133	10
Timing chain or belt cover sub–assy x Cylinder block sub–assy (See page 14–45)	A B	13 19	133 189	10 14
Crankshaft pulley x Crankshaft		138	1,407	102
Water pump assy x Timing chain cover sub–assy (See page 14–45)	A B	9.0 11	92 112	80 in.·lbf 8
Transverse engine engine mounting bracket x Timing chain or belt cover sub–assy		47	479	35
Spark plug x Cylinder head sub–assy		25	255	18
Ventilation valve sub–assy x Cylinder head cover sub–assy		30	306	22
Stud bolt x Cylinder head sub–assy (See page 14–134)	A, D and E B and C	9.5 5.0	97 51	84 in.·lbf 44 in.·lbf
W/ Head taper screw plug No. 2 x Cylinder head sub–assy		44	449	33
Connecting rod cap x Connecting rod (See page 14–147)	1st 2nd	20 Turn 90°	204 Turn 90°	15 Turn 90°
Crankshaft bearing cap sub–assy x Cylinder block sub–assy (See page 14–147)	1st 2nd Others	44 Turn 90° 19	449 Turn 90° 194	33 Turn 90° 14
Stud bolt x Cylinder block sub–assy (See page 14–147)	A, C, D and E B	5.0 11	51 112	44 in.·lbf 8
Cylinder block water drain cock sub–assy x Cylinder block sub–assy		25	255	18

EXHAUST

030P6–03

SERVICE DATA

Compression spring		
Free length	Minimum Exhaust pipe assy front x Exhaust manifold	41.5 mm (1.634 in.)
	Exhaust pipe assy front x Tail pipe assy	38.5 mm (1.516 in.)

030P7–01

TORQUE SPECIFICATION

Part Tightened	N·m	kgf·cm	ft·lbf
Exhaust pipe assy front x Exhaust manifold	43	440	32
Exhaust pipe assy front x Tail pipe assy	43	440	32
Floor panel brace front x Body	30	302	22
Oxygen sensor No. 1 x Exhaust pipe assy front	44	450	33

EXTERIOR/INTERIOR TRIM

030PV–02

TORQUE SPECIFICATION

Part Tightened	N·m	kgf·cm	ft·lbf
Radiator grille × Body	5.0	51	44 in.·lbf
Front bumper reinfocement × Body	36	367	27
Rear bumper arm LH × Body	36	367	27
Rear bumper arm RH × Body	36	367	27
Rear bumper reinfocement No.1 × Rear bumper arm LH	36	367	27
Rear bumper reinfocement No.1 × Rear bumper arm RH	36	367	27
Bumper mounting set bolt No. 1 × Body	5.5	56	49 in.·lbf
Front seat outer belt floor anchor x Body	41.2	420	30

FRONT SUSPENSION

030Q0–01

SERVICE DATA

Cold tire inflation pressure	Tire size: P185/65R15 86S P195/65R15 89S P195/65R15 89H	Front, Rear Front, Rear Front, Rear	210 kPa (2.1 kgf/cm^2, 30 psi)
Front wheel alignment	Vehicle height		
	USA, Canada	Front: A *1 – B *2 Rear: D *4 – C *3	87 mm (3.43 in.) 43 mm (1.69 in.)
	Mexico	Front: A *1 – B *2 Rear: D *4 – C *3	72 mm (2.84 in.) 29 mm (1.14 in.)
	Toe–in (total)		0° ± 12' (0° ± 0.2°, 0 ± 2 mm, 0 ± 0.08 in.)
		Rack end length difference	1.5 mm (0.059 in.) or less
	Wheel turning angle		
	USA, Canada	Inside wheel	37°06' ± 2° (37.10° ± 2°)
		Outside wheel: Reference	31°49' 31.82°
	Mexico	Inside wheel	37°16' ± 2° (37.27° ± 2°)
		Outside wheel: Reference	32°08' 32.13°
	Camber	USA, Canada: Mexico: Right–left error	–0°32' ± 45' (–0.53° ± 0.75°) –0°22' ± 45' (–0.37° ± 0.75°) 45' (0.75°) or less
	Caster	USA, Canada: Mexico: Right–left error	2°50' ± 45' (2.83° ± 0.75°) 2°43' ± 45' (2.72° ± 0.75°) 45' (0.75°) or less
	Steering axis inclination	USA, Canada: Mexico: Right–left error	11°21' ± 45' (11.35° ± 0.75°) 10°59' ± 45' (10.98° ± 0.75°) 45' (0.75°) or less
Front suspension	Lower ball joint turning torque		0.98 – 4.9 N·m (10 – 50 kgf·cm, 8.7 – 43 in.·lbf)
	Stabilizer bar link ball joint turning torque		0.05 – 0.96 N·m (0.5 – 20 kgf·cm, 0.4 – 1.7 in.·lbf)

***1: Ground clearance of front wheel center**
***2: Ground clearance of lower suspension arm front bolt center**
***3: Ground clearance of axle beam set bolt center**
***4: Ground clearance of rear wheel center**

030Q1–01

TORQUE SPECIFICATION

Part Tightened		N·m	kgf·cm	ft·lbf
Tie rod end lock nut		74	755	55
Steering knuckle x Shock absorber		153	1,560	113
Hub nut		103	1,050	76
Suspension support x Piston rod		47	479	34
Suspension support x Body		39	398	29
ABS speed sensor wire harness bracket set bolt		29	296	21
Suspension cross member x Body	Bolt A:	157	1,601	116
	Bolt B:	113	1,152	83
Suspension cross member x Transverse engine engine mounting insulator		52	530	38
Rack & pinion power steering gear assy set bolt		58	591	43
Steering knuckle x Lower ball joint		103	1,050	76
Stabilizer bracket No.1 x Suspension cross member		19	194	14
Stabilizer bar link set nut		74	755	55
Lower suspension arm x Lower ball joint		89	908	66
Lower suspension arm x Suspension cross member		137	1,397	101

FUEL

030OY–01

SERVICE DATA

Fuel pressure	at idle	304 – 343 kPa (3.1 – 3.5 kgf/cm2, 44 – 50 psi)
Fuel injector assy		
Resistance	at 20°C (68°F)	13.4 – 14.2Ω
Injection volume		60 – 73 cm^3 (3.7 – 4.5 cu in.) per 15 seconds
Difference between each injector		13 cm^3 (0.8 cu in.) or less
Fuel drop		1 drop or less per 12 minutes
Fuel pump		
Resistance	at 20°C (68°F)	0.2 – 3.0 Ω
Compression spring		
Free length	Front side	43 mm (1.6929 in.)
	Rear side	40 mm (1.5748 in.)

030OZ–01

TORQUE SPECIFICATION

Part Tightened		N·m	kgf·cm	ft·lbf
Fuel delivery pipe sub–assy x Cylinder head sub–assy	Bolt A	19	194	14
	Bolt B	9.0	92	80 in.·lbf
Cylinder head cover No. 2 x Cylinder head cover sub–assy		7.0	71	62 in.·lbf
Fuel tank vent tube set plate x Fuel tank assy		6.0	61	53 in.·lbf
Fuel tube clamp No. 4 x Fuel tank assy		6.0	61	53 in.·lbf
Fuel tank band sub–assy No. 1 x Body		39	400	29
Fuel tank band sub–assy No. 1 LH x Body		39	400	29
Parking brake cable assy No. 2 x Body		5.4	55	48 in.·lbf
Parking brake cable assy No. 3 x Body		5.4	55	48 in.·lbf
Fuel tank protector No. 1 x Body		5.4	55	48 in.·lbf
Fuel tank protector No. 1 x Fuel tank band sub–assy No. 1		5.4	55	48 in.·lbf
Exhaust pipe assy front x Exhaust manifold		43	440	32
Exhaust pipe assy front x Tail pipe assy		43	440	32
Floor panel brace front x Body		30	302	22

HEATER & AIR CONDITIONER

030QI–01

SERVICE DATA

Refrigerant charge volume	Standard:	490 ± 30 g (17.28 ± 1.06 oz.)
Magnetic clutch clearance		0.35 – 0.60 mm (0.013 – 0.023 in.)

030QJ–01

TORQUE SPECIFICATION

Part Tightened	N·m	kgf·cm	ft·lbf
AIR CONDITIONER UNIT ASSY			
Air conditioning tube assy x Cooler evaporator sub–assy No. 1	3.5	35	30 in.·lbf
Air conditioner unit assy x Body	9.8	100	87 in.·lbf
ECM x Blower assy	3.0	30	26 in.·lbf
COOLER COMPRESSOR ASSY			
Magnet clutch hub x Cooler compressor assy	18	183	13
Compressor and magnetic clutch x Engine	29	295	21
Discharge hose sub–assy x Compressor and magnetic clutch	9.8	100	87 in.·lbf
Cooler refrigerant suction hose No.1 x Compressor and magnetic clutch	9.8	100	87 in.·lbf
W/RECEIVER CONDENSER ASSY			
Cap x W/receiver condenser assy	2.9	29	25 in.·lbf
W/receiver condenser assy x Body	9.8	100	87 in.·lbf
Cooler refrigerant discharge hose No. 1 x W/receiver condenser assy	5.4	55	48 in.·lbf
Cooler refrigerant liquid pipe A x W/receiver condenser assy	5.4	55	48 in.·lbf

ENGINE HOOD/DOOR

TORQUE SPECIFICATION

030Q3–02

Part Tightened	N·m	kgf·cm	ft·lbf
HOOD			
Hood x Hood hinge	13	133	10
Hood lock x Body	7.0	82	71 in.·lbf
FRONT DOOR			
Front door check assembly (door panel side bolt) x Front door	5.5	56	49 in.·lbf
Front door frame sub–assy rear lower x Front door	6.2	63	55 in.·lbf
Front door glass sub–assy x Front door window regulator sub–assy	8.0	82	71 in.·lbf
Front door hinge x Body	26	265	19
Front door hinge x Door panel	26	265	19
Front door lock assy x Front door	5.0	51	44 in.·lbf
Front door lock striker x Body	23	235	17
Front door outside handle frame sub–assy x Front door	4.0	41	35 in.·lbf
Front door outside handle cover installation bolt (torx)	4.0	41	35 in.·lbf
Front door window regulator sub–assy x Front door	8.0	82	71 in.·lbf
Outer rear view mirror assy x Front door	8.0	82	71 in.·lbf
Power window regulator motor assy x Front door window regulator	5.4	55	48 in.·lbf
REAR DOOR			
Rear door check assembly (door panel side bolt) x Rear door	5.5	56	49 in.·lbf
Rear door hinge x Body	26	265	19
Rear door hinge x Door panel	26	265	19
Rear door lock assy x Rear door	5.0	51	44 in.·lbf
Rear door lock striker x Body	23	235	17
Rear door outside handle frame sub–assy x Rear door	4.0	41	35 in.·lbf
Rear door outside handle cover installation bolt (torx)	4.0	41	35 in.·lbf
Rear door window regulator sub–assy x Rear door	8.0	82	71 in.·lbf
Rear door window division bar x Door panel Bolt A	6.2	63	55 in.·lbf
Power window regulator motor assy x Rear door window regulator	5.4	55	48 in.·lbf
LUGGAGE COMPARTMENT DOOR			
Luggage compartment door hinge x Luggage compartment door	7.0	71	62 in.·lbf
Luggage compartment door lock assy x Luggage compartment door	5.5	56	49 in.·lbf
Rear door lock striker x Body	5.5	56	49 in.·lbf

IGNITION

030P2–01

SERVICE DATA

Spark plug		
Recommended spark plug	DENSO made	SK16R11
	NGK made	IFR5A11
Electrode gap	Standard	1.1mm (0.043 in.)
Crank position sensor No. 1		
Resistance	at cold	835–1,400Ω
	at hot	1,060–1,645Ω
Crank position sensor		
Resistance	at cold	1,630–2,740Ω
	at hot	2,065–3,225Ω
Ignition relay		
Specified condition	Between terminals 1 and 2	Continuity
	Between terminals 3 and 5	No continuity

030P3–01

TORQUE SPECIFICATION

Part Tightened	N·m	kgf·cm	ft·lbf
Spark plug x Cylinder head cover	25	225	18
Ignition coil x Cylinder head cover	9.0	92	80 in.·lbf

INSTRUMENT PANEL/METER

030PZ–01

TORQUE SPECIFICATION

Part Tightened	N·m	kgf·cm	ft·lbf
Instrument panel reinforce × Body	20	204	15

LUBRICATION

030P4–02

SERVICE DATA

Oil pressure	at idle speed	29 kPa (0.3 kgf·cm^2, 4.2 psi) or more
	at 3,000 rpm	294 to 539 kPa (3.0 to 5.5 kgf·cm^2, 43 to 78 psi)
Oil pump assy		
Tip clearance		0.040 to 0.160 mm (0.0016 to 0.0063 in.)
Body clearance		0.260 to 0.325 mm (0.0102 to 0.0128 in.)
Side clearance		0.025 to 0.071 mm (0.0010 to 0.0028 in.)

030P5–02

TORQUE SPECIFICATION

Part Tightened	N·m	kgf·cm	ft·lbf
Oil pressure switch x Crankshaft bearing cap sub–assy	15	153	11
Oil pump assy x Cylinder block sub–assy	9.0	92	80 in.·lbf
Chain vibration damper No. 1 x Cylinder head sub–assy	9.0	92	80 in.·lbf
Chain vibration damper No. 1 x Cylinder block sub–assy	9.0	92	80 in.·lbf
Oil pan drain plug x Oil pan sub–assy	37	377	27
Oil pump cover x Oil pump body	10	105	8
Oil pump relief valve plug x Oil pump body	37	375	27

MANUAL TRANSMISSION / TRANSAXLE

030QD–01

SERVICE DATA

MANUAL TRANSAXLE ASSY		
5th gear thrust clearance	STD:	0.10 – 0.57 mm (0.0039 – 0.0224 in.)
	MAX:	0.57 mm (0.0224 in.)
5th gear radial clearance	KOYO made STD:	0.015 – 0.058 mm (0.0006 – 0.0023 in.)
	MAX:	0.058 mm (0.0023 in.)
	NSK made STD:	0.015 – 0.056 mm (0.0006 – 0.0022 in.)
	MAX:	0.056 mm (0.0022 in.)
Synchronizer ring No.3 back and 5th gear spline end clearance	Min:	0.75 mm (0.0295 in.)
5th gear inner diameter	STD:	29.915 – 29.931mm (1.1778 – 1.1783 in.)
	MAX:	29.931mm (1.1783 in.)
Reverse idler gear sub–assy inner diameter	STD:	18.040 – 18.058 mm (0.7102 – 0.7109 in.)
	MAX:	18.058 mm (0.7109 in.)
Reverse idler gear shaft outer diameter	STD:	17.966 – 17.984 mm (0.7073 – 0.7080 in.)
	Min:	17.966 mm (0.7073 in.)
Front transaxle case oil seal drive in depth		15.6 – 16.0 mm (0.6142 – 0.6299 in.)
Input shaft front bearing drive in depth		0 – 0.3 mm (0 – 0.012 in.)
Front differential case shim thickness	AA:	2.10 mm (0.0827 in.)
	BB:	2.15 mm (0.0846 in.)
	CC:	2.20 mm (0.0866 in.)
	DD:	2.25 mm (0.0886 in.)
	EE:	2.30 mm (0.0906 in.)
	FF:	2.35 mm (0.0925 in.)
	GG:	2.40 mm (0.0945 in.)
	HH:	2.45 mm (0.0965 in.)
	JJ:	2.50 mm (0.0984 in.)
	KK:	2.55 mm (0.1004 in.)
	LL:	2.60 mm (0.1024 in.)
	MM;	2.65 mm (0.1043 in.)
	NN:	2.70 mm (0.1063 in.)
	PP:	2.75 mm (0.1083 in.)
	QQ:	2.80 mm (0.1102 in.)
	RR:	2.85 mm (0.1122 in.)
	SS:	2.90 mm (0.1142 in.)
	TT:	2.95 mm (0.1161 in.)
	UU:	3.00 mm (0.1181 in.)
Transmission case oil seal drive in depth		9.9 ± 0.3 mm (0.390 ± 0.012 in.)
Transaxle case oil seal drive in depth		1.9 ± 0.3 mm (0.075 ± 0.012 in.)
Reverse restrict pin slotted pin drive in depth		15.5 ± 16.5 mm (0.6102 ± 0.6496 in.)
Transmission clutch hub No.3 snap ring thickness	A:	2.25 mm (0.0886 in.)
	B:	2.31 mm (0.0909 in.)
	C:	2.37 mm (0.0933 in.)
	D:	2.43 mm (0.0957 in.)
	E:	2.49 mm (0.0980 in.)
	F:	2.55 mm (0.1004 in.)
	G:	2.61 mm (0.1028 in.)
INPUT SHAFT ASSY		
4th gear thrust clearance	STD:	0.10 – 0.55 mm (0.0039 – 0.0217 in.)
	MAX:	0.55 mm (0.0217 in.)
3rd gear thrust clearance	STD:	0.10 – 0.35 mm (0.0039 – 0.0138 in.)
	MAX:	0.35 mm (0.0138 in.)
4th gear radial clearance	KOYO made STD:	0.015 – 0.058 mm (0.0006 – 0.0023 in.)
	MAX:	0.058 mm (0.0023 in.)
	NSK made STD:	0.015 – 0.056 mm (0.0006 – 0.0022 in.)
	MAX:	0.056 mm (0.0022 in.)

3rd gear radial clearance	KOYO made STD:	0.015 – 0.058 mm (0.0006 – 0.0023 in.)
	MAX:	0.058 mm (0.0023 in.)
	NSK made STD:	0.015 – 0.056 mm (0.0006 – 0.0022 in.)
	MAX:	0.056 mm (0.0022 in.)
Input shaft run out	MAX:	0.015 mm (0.0006 in.)
Input shaft outer diameter	STD: A	24.885 – 24.900 mm (0.9797 – 0.9803 in.)
	B	28.985 – 29.000 mm (1.1411 – 1.1417 in.)
	C	30.985 – 31.000 mm (1.2198 – 1.2204 in.)
	D	24.985 – 25.000 mm (0.9836 – 0.9842 in.)
	Min: A	24.885 mm (0.9797 in.)
	B	28.985 mm (1.1411 in.)
	C	30.985 mm (1.2198 in.)
	D	24.985 mm (0.9836 in.)
4th gear inside diameter	STD:	34.015 – 34.031 mm (1.3391 – 1.3398 in.)
	MAX:	34.031 mm (1.3398 in.)
3rd gear inside diameter	STD:	36.015 – 36.031 mm (1.4179 – 1.4185 in.)
	MAX:	36.031 mm (1.4185 in.)
3rd gear synchronizer ring back and 3rd gear spline end clearance	Min:	0.65 mm (0.0256 in.)
4th gear synchronizer ring back and 3rd gear spline end clearance	Min:	0.75 mm (0.0295 in.)
Gear shift fork No.2 claw and glove of the transmission hub sleeve No.2 clearance		0.15 – 0.35 mm (0.0059 – 0.0137 in.)
Transmission clutch hub No.2 snap ring thickness	Mark: 0	2.30 mm (0.0906 in.)
	1	2.36 mm (0.0929 in.)
	2	2.42 mm (0.0953 in.)
	3	2.48 mm (0.0976 in.)
	4	2.54 mm (0.1000 in.)
	5	2.60 mm (0.1024 in.)
Input shaft rear radial ball bearing snap ring	Mark: 0	2.29 mm (0.0901 in.)
	1	2.35 mm (0.0925 in.)
	2	2.41 mm (0.0948 in.)
	3	2.47 mm (0.0972 in.)
	4	2.53 mm (0.0996 in.)
	5	2.59 mm (0.1019 in.)
OUTPUT SHAFT ASSY		
1st gear thrust clearance	STD:	0.10 – 0.40 mm (0.0039 – 0.0157 in.)
2nd gear thrust clearance	STD:	0.10 – 0.45 mm (0.0039 – 0.0177 in.)
1st gear radial clearance	KOYO made:	0.015 – 0.058 mm (0.0006 – 0.0023 in.)
	NSK made:	0.015 – 0.056 mm (0.0006 – 0.0022 in.)
1st gear radial clearance	KOYO made:	0.015 – 0.058 mm (0.0006 – 0.0023 in.)
	NSK made:	0.015 – 0.056 mm (0.0006 – 0.0022 in.)
Output shaft maximum run out		0.015 mm (0.0006 in.)
Output shaft outer diameter	Part: A	31.985 mm (1.2592 in.)
	B	37.985 mm (1.4955 in.)
	C	32.985 mm (1.2986 in.)
2nd gear inside diameter	New:	38.015 – 38.031 mm (1.4967 – 1.4973 in.)
	MAX:	38.031 mm (1.4973 in.)
1st gear inside diameter	New:	44.015 – 44.031 mm (1.7329 – 1.7335 in.)
	MAX:	44.031 mm (1.7335 in.)
1st gear thrust washer thickness	New:	5.975 – 6.025 mm (0.2352 – 0.2372 in.)
	Min:	5.975 mm (0.2352 in.)
Synchronizer ring set No.2 back and 2nd gear spline end clearance		0.7 – 1.3 mm (0.0276 – 0.0512 in.)
Synchronizer ring set No.1 back and 2nd gear spline end clearance		0.75 – 1.65 mm (0.0295 – 0.065 in.)
Reverse gear groove and reverse gear shift fork claw clearance		0.15 – 0.35 mm (0.0059 – 0.0138 in.)

Output shaft front bearing snap ring thickness	7	1.85 – 1.90 mm (0.728 – 0.0748 in.)
	8	1.90 – 1.95 mm (0.748 – 0.0768 in.)
	1	1.95 – 2.00 mm (0.768 – 0.0787 in.)
	2	2.00 – 2.05 mm (0.787 – 0.0807 in.)
	3	2.05 – 2.10 mm (0.807 – 0.0827 in.)
	4	2.10 – 2.15 mm (0.827 – 0.0846 in.)
	5	2.15 – 2.20 mm (0.846 – 0.0866 in.)
	6	2.20 – 2.25 mm (0.866 – 0.0886 in.)
Transmission clutch hub No.1 snap ring thickness	A	2.50 mm (0.0984 in.)
	B	2.56 mm (0.1008 in.)
	C	2.62 mm (0.1031 in.)
	D	2.68 mm (0.1055 in.)
	E	2.74 mm (0.1079 in.)
	F	2.80 mm (0.1102 in.)
DIFFERENTIAL CASE ASSY		
Front differential side gear backlash		0.05 – 0.20 mm (0.0020 – 0.0079 in.)
Front differential pinion thrust washer thickness		0.92 mm (0.0362 in.)
Front differential pinion shaft No.1 outer diameter		16.982 mm (0.6686 in.)
Front differential side gear thrust washer		0.95 mm (0.0374 in.) 1.00 mm (0.0394 in.) 1.05 mm (0.0413 in.) 1.10 mm (0.0433 in.) 1.15 mm (0.0453 in.) 1.20 mm (0.0472 in.)
SHIFT & SELECT LEVER SHAFT ASSY		
Control shaft cover oil seal drive in depth		0.7 ± 0.5 mm (0.0276 ± 0.0197 in.)
Select inner lever slotted pin drive in depth		3.0 – 4.0 mm (0.1181 – 0.1575 in.)
Shift lever inner No.1 slotted pin drive in depth		0 ± 0.5 mm (0 ± 0.0197 in.)
Shift lever inner No.2 slotted pin drive in depth		0 ± 0.5 mm (0 ± 0.0197 in.)

030QE–01

TORQUE SPECIFICATION

Part Tightened		N·m	kgf·cm	ft·lbf
Floor shift transmission control cable assy x Body		5.0	51	44 in.·lbf
Front floor heat insulator No.1 x Body		5.5	56	49 in.·lbf
Airbag sensor assy center x Body		17.5	178	13
Shift cable grommet retainer No.1 x Body		5.0	51	44 in.·lbf
Clamp x Body		5.0	51	44 in.·lbf
Floor shift shift lever assy x Body		12	120	9
Filler and drain plugs		39.2	400	29
Engine hanger set bolt		38	387	28
Engine mounting bracket RR x Transaxle		64	653	47
Engine mounting bracket RR x Engine mounting insulator RR		87	888	64
Engine mounting bracket FR x Transaxle		64	653	47
Engine mounting bracket FR x Engine mounting insulator FR		52	530	38
Manual transaxle assy x Engine	Bolt A: Bolt B: Bolt C:	64 47 23	650 480 230	47 35 17
Transverse engine engine mounting bracket LH x Transaxle		52	530	38
Engine mounting bracket LH x Engine mounting insulator LH	Bolt A: Nut B:	52 80	530 816	38 59
Starter assy x Manual transaxle assy		37	378	27
Starter wire set nut		9.8	100	87 in.·lbf
Clutch release cylinder assy x Transaxle	Bolt A: Bolt B: Bolt C:	25 12 5.0	250 120 21	19 9 44 in.·lbf
Manual transaxle assy x Wire harness clmap	Bolt A: Bolt B:	25.5 12.8	260 131	19 9
Manual transaxle assy x Ground cable		13	133	10
Battery carrier x Body		13	133	10
Battery clamp sub–assy x Body	Bolt: Nut:	5.0 3.5	51 36	44 in.·lbf 31 in.·lbf
Air cleaner assy x Body		7.0	71	62 in.·lbf
Cylinder head cover No.2 x Engine		7.0	71	62 in.·lbf
Hood set bolt		13	133	10
Bearing lock plate x transaxle case		11.3	115	8
Oil receiver pipe No.1 x Manual transmission case		17.2	175	13
Oil receiver pipe No.2 x Manual transmission case		17.2	175	13
Reverse restrict pin plug x Manual transmission case		12.7	130	9
Manual transaxle case receiver x Transaxle case		11.3	115	8
Gear shift fork No.1 x Gear shift fork shaft No.1		15.7	160	12
Gear shift head No.1 x Gear shift fork shaft No.2		15.7	160	12
Gear shift fork No.2 x Gear shift fork shaft No.2		15.7	160	12
Reverse shift arm bracket assy x Transaxle case		17.2	175	13
Trasaxle case x Manual transmission case		29.4	300	22
Manual transmission case x Transaxle case		29.4	300	22
Reverse idler gear shaft bolt x Manual transmission case		29.4	300	22
Lock ball assy No.1 x Manual transaxle assy		39.2	400	29
Shift detent ball plug Manual transmission case		24.5	250	18
Shift detent ball plug x Transaxle case		24.5	250	18
Bearing retainer rear x Manual transmission case		27.4	279	20
Gear shift fork No.3 x Gear shift fork shaft No.3		15.7	160	12
Manual transmission output shaft rear set nut x Output shaft		117.6	1,200	87
Manual transmission case cover sub–assy x Manual transmission case		18.1	185	14

Part Tightened	N·m	kgf·cm	ft·lbf
Shift & select lever shaft assy x Manual transmission case	19.6	200	14
Lock ball assy No.1 x Manual transmission case	29.4	300	22
Selecting bell crank assy x Manual transmission case	24.5	250	18
Floor shift control lever housing support bracket x Transaxle case	11.3	115	8
Back up lamp switch assy x Manual transmission case	40.2	410	30
Speedometer driver hole cover sub–assy x Manual transaxle assy	11.3	115	8
Speedometer sensor x Manual transaxle assy	11.3	115	8
Release fork support x Transaxle case	36.8	375	25
Drain plug sub–assy x Manual transmission case	39.2	400	29
Manual transmission filler plug x Manual transmission case	39.2	400	29
Front differential case x Front differential ring gear	77.4	789	57
Selecting bell crank x Selecting bell crank No.2	11.8	120	9

PARKING BRAKE

030Q6–01

SERVICE DATA

Parking brake lever travel at 196 N (20 kgf, 44.1 lbf):	6 – 9 clicks

030Q7–01

TORQUE SPECIFICATION

Part Tightened	N·m	kgf·cm	ft·lbf
Wheel nut	103	1,050	76
Parking brake lock nut	5.0	55	44 in.·lbf
Parking brake lever sub–assy x body	12.5	130	9
Heat insulator No.2 x Body	5.5	55	48 in.·lbf
Heat insulator No.1 x Body	5.5	55	48 in.·lbf
Fuel tank protector No.1 x Body	5.5	55	48 in.·lbf
Exhaust pipe installation bolt	43	440	32
Front floor panel brace	29.6	302	21
Parking brake cable assy No.3 x Body	5.4	55	48 in.·lbf
Parking brake cable assy No.3 x Backing plate	7.8	80	69 in.·lbf

POWER STEERING

030QA–01

SERVICE DATA

POWER STEERING FLUID		
Fluid level rise	Maximum	5 mm (0.20 in.)
Fluid pressure at idle speed with valve closed		7,300 – 7,800 kPa (75 – 80 kgf/cm^2, 1,067 – 1,138 psi)
STEERING WHEEL		
Steering effort at idle speed	(Reference)	6 N·m (60 kgf·cm, 53 in.·lbf)
POWER STEERING VANE PUMP		
Vane pump rotating torque		0.27 N·m (2.8 kgf·cm, 2.4 in.·lbf) or less
Vane pump shaft and vane pump housing oil clearance	STD Maximum	0.021 – 0.043 mm (0.0008 – 0.0017 in.) 0.07 mm (0.0028 in.)
Vane plate height	Minimum	7.6 mm (0.299 in.)
Vane plate thickness	Minimum	1.405 mm (0.0553 in.)
Vane plate length	Minimum	11.993 mm (0.4722 in.)
Clearance between the rotor groove and plate	Maximum	0.03 mm (0.0012 in.)
Spring free length	Minimum	36.9 mm (1.453 in.)
POWER STEERING GEAR		
Steering rack runout	Maximum	0.1 mm (0.004 in.)
Total preload (Tie rod rotating torque)	(Turning)	0.49 – 3.43 N·m (5.0 – 35 kgf·cm, 4.34 – 30.38 in.·lbf)
Total preload (Control valve rotating torque)	(Turning)	1.0 – 1.8 N·m (10 – 18 kgf·cm, 8.6 – 15.7 in.·lbf)

030QB–01

TORQUE SPECIFICATION

Part tightened		N·m	kgf·cm	ft·lbf
POWER STEERING VANE PUMP				
Vane pump housing rear x Vane pump housing front		22	220	16
Pressure port union		69	700	51
Suction port union set bolt		12	122	9
Oil pressure switch		21	210	15
Vane pump assy x Vane pump bracket rear		37	380	27
Vane pump assy set bolt		37	380	27
Pressure feed tube assy x Vane pump assy		41 (44)	420 (450)	30 (33)
Pressure feed tube assy clamp set bolt		7.8	80	69 in.·lbf
POWER STEERING GEAR				
Engine hanger set bolt		38	390	28
Control valve housing set bolt		18	185	13
Self–locking nut		25	250	18
Rack housing cap		59	600	43
Rack guide spring cap lock nut		43 (59)	440 (600)	32 (43)
Power steering rack x Rack end		62 (83)	630 (850)	46 (61)
Tie rod assy lock nut		74	750	54
Turn pressure tube union nut		12 (13)	120 (130)	9 (9)
Rack & pinion power steering gear assy set bolt and nut		58	590	43
Pressure feed and return tubes x Control valve housing		23 (25)	235 (255)	17 (18)
Pressure feed tube clamp set bolt		7.8	80	69 in.·lbf
Stabilizer link assy set nut		74	755	55
Tie rod assy set nut		49	500	36
Intermediate shaft sub–assy x Control valve shaft		35	360	26
Front suspension crossmember sub–assy x Frame	Bolt A	157	1,600	116
	Bolt B	157	1,600	116
Center member x Frame		39	400	29
Center member x Engine mounting insulator FR		52	530	38
Crossmember x Engine mounting insulator RR		52	530	38
Front suspension arm sub–assy lower No.1 x Lower ball joint		89	910	66
Hub nut		103	1,050	76

( ): For use without SST

REAR SUSPENSION

SERVICE DATA

030PR–01

Rear wheel alignment	Toe–in (total)		
	USA, Canada	P195/65R15 89S	0°16’ ± 16’ (0.26° ± 0.26°, 2.6 ± 2.5 mm, 0.10 ± 0.10 in.)
		P185/65R15 86S	0°16’ ± 16’ (0.26° ± 0.26°, 2.6 ± 2.5 mm, 0.10 ± 0.10 in.)
	Mexico	P195/65R15 89H	0˚01’ ± 16’ (0.16˚ ± 0.26˚, 1.6 ± 2.5 mm, 0.06 ± 0.10 in.)
	Camber	USA, Canada:	–1˚27’ ± 30’ (–1.45˚ ± 0.5˚)
		Mexico:	–1˚26’ ± 30’ (–1.43˚ ± 0.5˚)
		Right–left error	30’ (0.5˚) or less

030PS–01

TORQUE SPECIFICATION

Part Tightened		N·m	kgf·cm	ft·lbf
Piston rod set nut		56	571	41
Shock absorber x Body		80	816	59
Hub nut		103	1,050	76
Shock absorber x Rear axle beam		80	816	59
Stabilizer bar x Rear axle beam		195	1,990	144
Rear axle hub set bolt		61	622	45
Parking brake cabke bracket set bolt		5.4	55	48 in.·lbf
Skid control sensor wire harness bracket set bolt	(A)	5.4	55	48 in.·lbf
	(B)	5.0	51	44 in.·lbf
Rear axle beam x Body		85	867	62

SEAT

TORQUE SPECIFICATION

030PU–01

Part Tightened	N·m	kgf·cm	ft·lbf
FRONT SEAT			
Seat back assembly x Seat adjuster assembly	43	440	32
Seat belt inner x Seat adjuster assembly	42	430	31
Seat assembly x Body	47	480	35
REAR SEAT (SEDAN WITH SEPARATE TYPE)			
Seat back hinge x Seat back	18	185	13
REAR SEAT (SEDAN WITH BENCH TYPE)			
Seat back assembly x Body	7.8	80	69 in.·lbf

SEAT BELT

TORQUE SPECIFICATION

030PY–02

Part Tightened	N·m	kgf·cm	ft·lbf
FRONT SEAT BELT			
Front shoulder belt anchor adjuster assy x Body	41.2	420	30
Front seat outer belt assy (Upper part of retractor) x Body	4.9	50	43 in.·lbf
Front seat outer belt assy (Lower part of retractor) x Body	41.2	420	30
Front seat outer belt shoulder anchor x Body	41.2	420	30
Front seat outer belt floor anchor x Body	41.2	420	30
Front seat inner belt assy x Front seat	41.2	420	30
REAR SEAT BELT			
Child restraint seat anchor bracket sub–assy x Body	18.1	185	13.3
Rear seat inner w/center belt assy LH x Body	41.2	420	30
Rear seat inner w/center belt assy RH x Body	41.2	420	30
Rear seat belt assembly outer center x Body	41.2	420	30
Rear seat belt assembly outer (Retractor side) x Body	41.2	420	30
Rear seat belt assembly outer (Floor anchor side) x Body	41.2	420	30

SLIDING ROOF/CONVERTIBLE

030QN–02

SERVICE DATA

Sliding roof	Difference in level between sliding roof weatherstrip and roof panel	
	Except corners of rear side	0 + 1.5 mm (0 ± 0.059 in.)
	Corner of rear side	–1.0 – 1.5 mm (–0.039 – 0.059 in.)

030QO–02

TORQUE SPECIFICATION

Part Tightened	N·m	kgf·cm	ft·lbf
Sliding roof glass assembly × Drive cable	4.0	41	35 in.·lbf
Sliding roof housing assembly × Body	5.0	51	44 in.·lbf
Sliding roof housing assembly × Sliding roof drive gear	5.4	55	47 in.·lbf

SUPPLEMENTAL RESTRAINT SYSTEM

030FN–02

TORQUE SPECIFICATION

Part Tightened	N·m	kgf·cm	ft·lbf
Horn button assy x Steering wheel assy	8.8	90	78 in.·lbf
Steering wheel assy x Steering column assy	50	510	37
Instrument panel passenger airbag assy x Instrument panel reinforcement	20	204	15
Airbag sensor assy center x Body	17.5	178	13
Airbag front RH sensor x Body	8.0	82	71 in.·lbf
Airbag sensor front LH x Body	8.0	82	71 in.·lbf
Side airbag sensor assy RH x Body	8.0	82	71 in.·lbf
Seat position airbag sensor x Front seat	8.0	82	71 in.·lbf

STANDARD BOLT

HOW TO DETERMINE BOLT STRENGTH

0307K–02

Bolt Type				Class
Hexagon Head Bolt		Stud Bolt	Weld Bolt	
Normal Recess Bolt	Deep Recess Bolt			
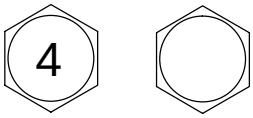		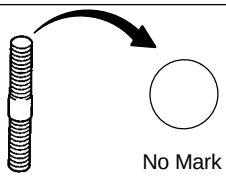	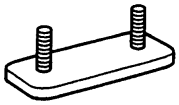	4T
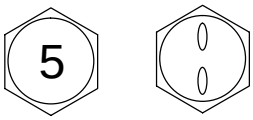	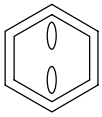			5T
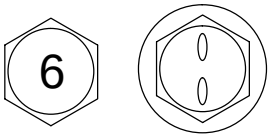	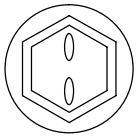			6T
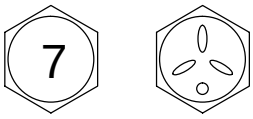	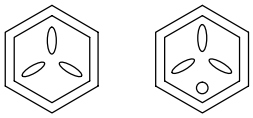			7T
				8T
				9T
	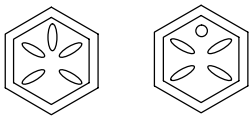			10T
	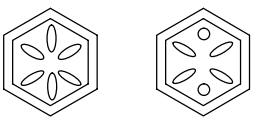			11T

B06431

0307M–02

HOW TO DETERMINE NUT STRENGTH

Nut Type			Class
Present Standard Hexagon Nut	Old Standard Hexagon Nut		
	Cold Forging Nut	Cutting Processed Nut	
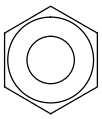 No Mark			4N
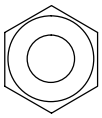 No Mark (w/ Washer)	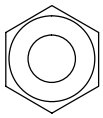 No Mark (w/ Washer)	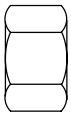 No Mark	5N (4T)
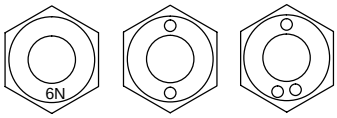 6N			6N
	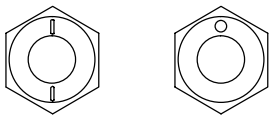	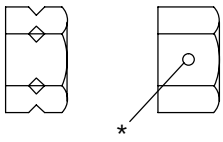 *	7N (5T)
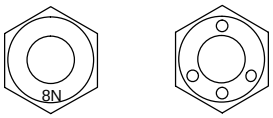 8N			8N
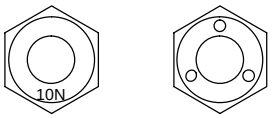 10N	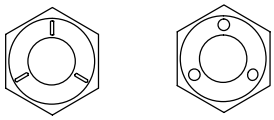	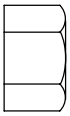 No Mark	10N (7T)
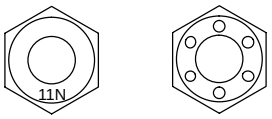 11N			11N
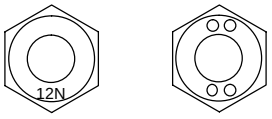 12N			12N

*: Nut with 1 or more marks on one side surface of the nut.

B06432

HINT:

Use the nut with the same number of the nut strength classification or the greater than the bolt strength classification number when tightening parts with a bolt and nut.

Example: Bolt = 4T

Nut = 4N or more

STARTING & CHARGING

030PL–03

SERVICE DATA

Starter assy		
Specified current		90 A or less at 11.5 V
Commutator length	Standard	3.3 mm (0.1299 in.)
	Minimum	4.0 mm (0.1575 in.)
Brush holder length	Standard	9.0 mm (0.3543 in.)
	Minimum	4.0 mm (0.1575 in.)
Snap ring length	Maximum	5.0 mm (0.1969 in.)
Generator assy		
Rotor coil resistance	at 20°C (68°F)	2.1 to 2.5 Ω
Slip ring diameter	Standard	14.2 to 14.4 mm (0.559 to 0.567 in.)
	Minimum	12.8 mm (0.504 in.)
Brush exposed length	Standard	9.5 to 11.5 mm (0.374 to 0.453 in.)
	Minimum	1.5 mm (0.059 in.)
Battery		
Voltage	at 20°C (68°F)	12.5 to 12.9 V

030PM–03

TORQUE SPECIFICATION

Part Tightened		N·m	kgf·cm	ft·lbf
Lead wire x Repair service starter kit		10	102	7
Starter x Engine	Bolt	37	378	27
	Nut	9.8	100	7
Commutator end frame x Starter drive housing assy		6.0	61	53 in.·lbf
Repair service starter kit x Starter drive housing assy		7.5	76	66 in.·lbf
Battery negative terminal x Battery		5.4	55	48 in.·lbf
Generator assy x Engine	M12	25	250	18
	M14	54	550	39
Rectifire end frame x Drive end frame (See page 19–18)	Nut A	4.5	46	39 in.·lbf
	Nut B	5.4	55	47 in.·lbf
Recrifire holder x Coil lead on rectifire end frame		2.9	30	26 in.·lbf
Voitage regulator x Rectifire end frame		2.0	20	18 in.·lbf
Brush holder x Rectifire end frame		2.0	20	18 in.·lbf
Rear end cover x Rectifire holder		4.4	45	39 in.·lbf
Plate terminal x Rectifire holder		3.9	39	35 in.·lbf
Terminal insulator x Rectifire holder		4.1	42	36 in.·lbf
Generator pulley x Rotor		111	1,125	81

STEERING COLUMN

030Q8–01

SERVICE DATA

STEERING SYSTEM		
Steering wheel freeplay	Maximum	30 mm (1.18 in.)

030Q9–01

TORQUE SPECIFICATION

Part Tightened	N·m	kgf·cm	ft·lbf
Sliding yoke x Steering intermediate shaft	35	360	26
Sliding yoke x Steering column assy	35	360	26
Steering column assy set bolt	21	210	15
Steering wheel set nut	50	510	37
Steering wheel pad set screw (Torx screw)	8.8	90	78 in.·lbf

TIRE&WHEEL

SERVICE DATA

030Q2–01

Tire runout	3.0 mm (0.118 in.) or less
Imbalance after adjustment	8.0 g (0.018 lb) or less

0307L–02

SPECIFIED TORQUE FOR STANDARD BOLTS

Class	Diameter mm	Pitch mm	Specified torque					
			Hexagon head bolt			Hexagon flange bolt		
			N·m	kgf·cm	ft·lbf	N·m	kgf·cm	ft·lbf
4T	6	1	5	55	48 in.·lbf	6	60	52 in.·lbf
	8	1.25	12.5	130	9	14	145	10
	10	1.25	26	260	19	29	290	21
	12	1.25	47	480	35	53	540	39
	14	1.5	74	760	55	84	850	61
	16	1.5	115	1,150	83	–	–	–
5T	6	1	6.5	65	56 in.·lbf	7.5	75	65 in.·lbf
	8	1.25	15.5	160	12	17.5	175	13
	10	1.25	32	330	24	36	360	26
	12	1.25	59	600	43	65	670	48
	14	1.5	91	930	67	100	1,050	76
	16	1.5	140	1,400	101	–	–	–
6T	6	1	8	80	69 in.·lbf	9	90	78 in.·lbf
	8	1.25	19	195	14	21	210	15
	10	1.25	39	400	29	44	440	32
	12	1.25	71	730	53	80	810	59
	14	1.5	110	1,100	80	125	1,250	90
	16	1.5	170	1,750	127	–	–	–
7T	6	1	10.5	110	8	12	120	9
	8	1.25	25	260	19	28	290	21
	10	1.25	52	530	38	58	590	43
	12	1.25	95	970	70	105	1,050	76
	14	1.5	145	1,500	108	165	1,700	123
	16	1.5	230	2,300	166	–	–	–
8T	8	1.25	29	300	22	33	330	24
	10	1.25	61	620	45	68	690	50
	12	1.25	110	1,100	80	120	1,250	90
9T	8	1.25	34	340	25	37	380	27
	10	1.25	70	710	51	78	790	57
	12	1.25	125	1,300	94	140	1,450	105
10T	8	1.25	38	390	28	42	430	31
	10	1.25	78	800	58	88	890	64
	12	1.25	140	1,450	105	155	1,600	116
11T	8	1.25	42	430	31	47	480	35
	10	1.25	87	890	64	97	990	72
	12	1.25	155	1,600	116	175	1,800	130

WIPER & WASHER

TORQUE SPECIFICATION

030PT–01

Part Tightened	N·m	kgf·cm	ft·lbf
Wind shield wiper motor assy × Wiper link assy	7.5	76	66 in.·lbf
Wiper link assy × Body	5.5	56	49 in.·lbf
FR Wiper arm RH × Wiper link	20.5	209	15
FR Wiper arm LH × Wiper link	20.5	209	15

ABS WARNING LIGHT CIRCUIT (DOES NOT LIGHT UP)

CIRCUIT DESCRIPTION

If the ECU detect trouble, it will prohibit ABS control, turn on ABS warning light, and store the DTC.
Connect terminals Tc and CG of the DLC3 to make the ABS warning light blink and output the DTC.

WIRING DIAGRAM

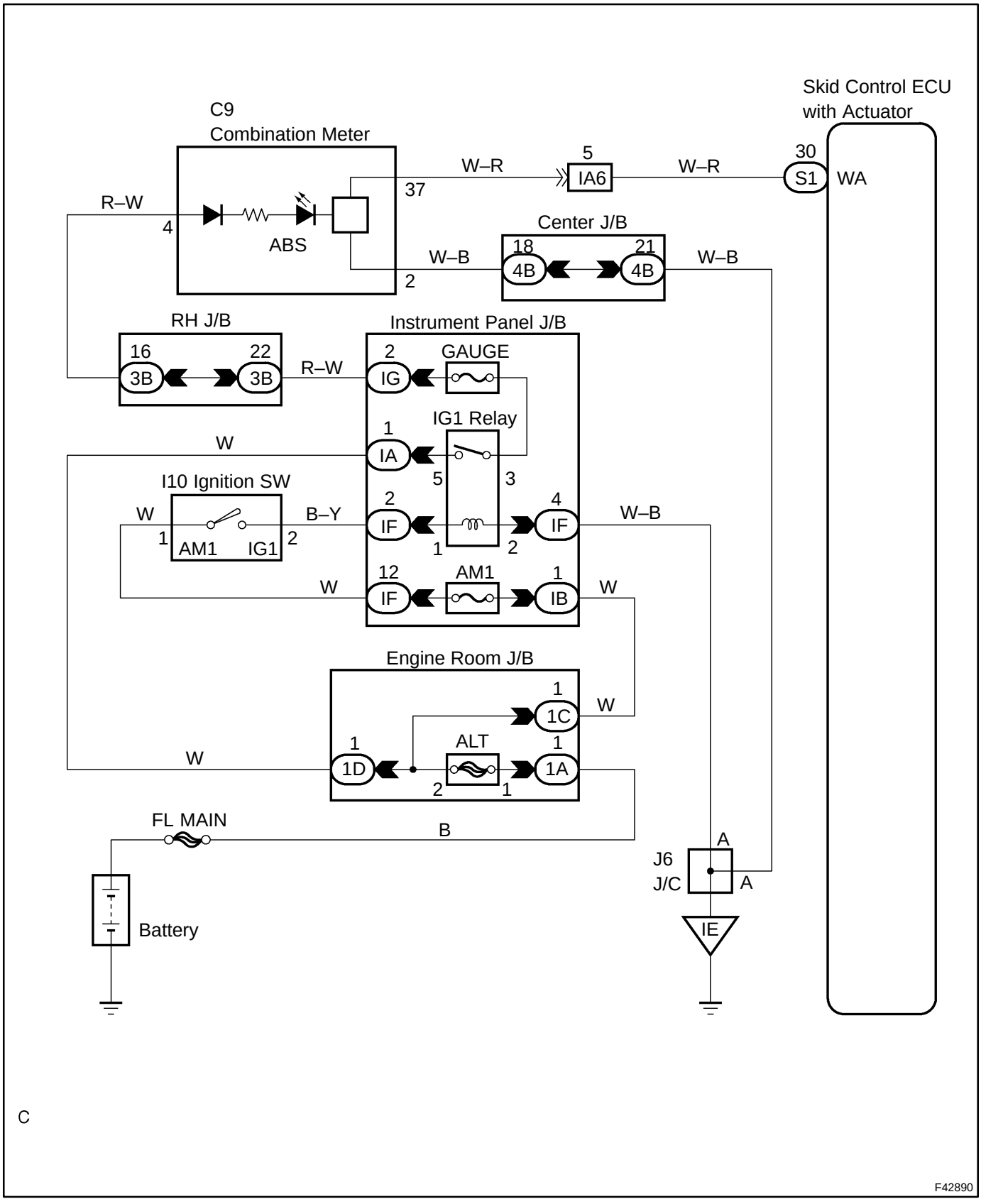

INSPECTION PROCEDURE

HINT:

Start the inspection from step 1 in case of using the hand–held tester and start from step 2 in case of not using the hand–held tester.

1	PERFORM ACTIVE TEST BY HAND–HELD TESTER(ABS WARNING LIGHT)

(a) Check that ”ON” and ”OFF” of the ABS warning light can be shown on the combination meter by the hand–held tester.

OK → **CHECK AND REPLACE BRAKE ACTUATOR ASSY (See page 05–306)**

NG

2	INSPECT COMBINATION METER ASSY(ABS WARNING LIGHT)

(a) Disconnect the connector from the skid control ECU.
(b) Turn the ignition switch to ON.
(c) Check the ABS warning light.

OK:

ABS warning light goes ON

NG → **REPAIR OR REPLACE COMBINATION METER ASSY**

OK

3	CHECK HARNESS AND CONNECTOR(WA CIRCUIT)

(a) Check for short circuit in harness and connector of the between terminal WA of skid control ECU and combination meter (See page 01–30).

NG → **REPAIR OR REPLACE HARNESS OR CONNECTOR**

OK

CHECK AND REPLACE BRAKE ACTUATOR ASSY (See page 05–306)

DTC AlwaysON MALFUNCTION IN ABS ECU

CIRCUIT DESCRIPTION

DTC No.	DTC Detecting Condition	Trouble Area
Always ON	Either of the following 1. or 2. is detected: 1. The ECU connectors are OFF from the ECU. 2. There is a malfunction in the ECU internal circuit.	• Battery • Charging system • Power source circuit • Skid control ECU

HINT:

There is a case that hand–held tester cannot be used when ECU is abnormal.

WIRING DIAGRAM

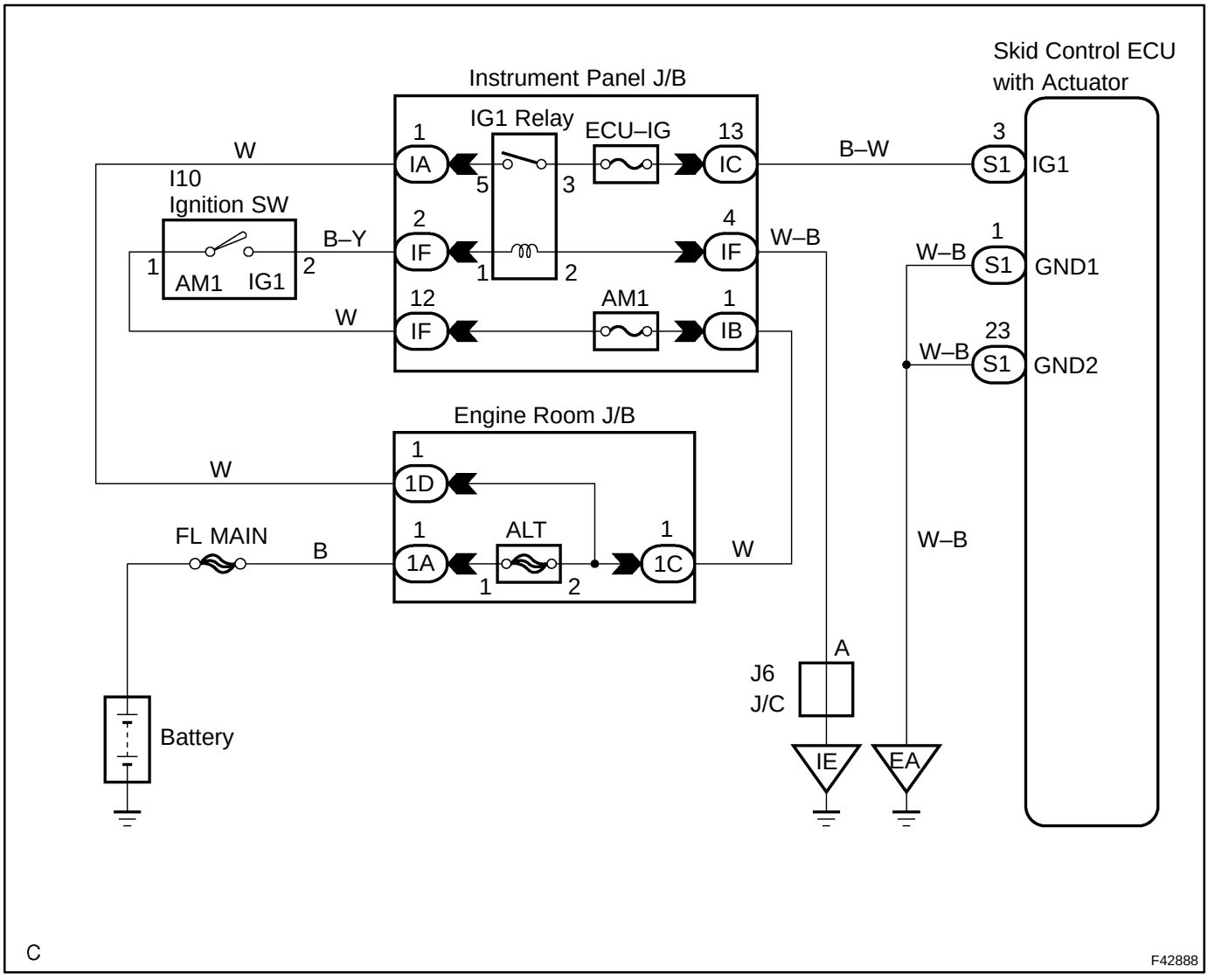

INSPECTION PROCEDURE

1	RECONFIRM DTC

(a) Check the DTC (See page 05–297).

YES → REPAIR CIRCUIT INDICATED BY OUTPUT CODE

NO

2	INSPECT SKID CONTROL ECU CONNECTOR SECURELY CONNECTED

NO → CONNECT CONNECTOR TO ECU

YES

3	INSPECT SKID CONTROL ECU CONNECTOR(IG1 TERMINAL VOLTAGE)

IN CASE OF USING HAND–HELD TESTER:

(a) Check the voltage condition output from the ECU displayed on the hand–held tester.
OK:
"Normal" is displayed.

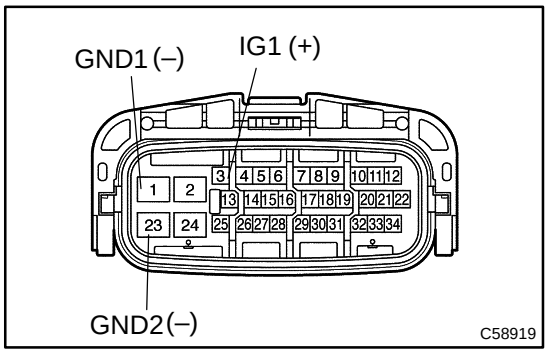

IN CASE OF NOT USING HAND–HELD TESTER:

(a) Disconnect the skid control ECU connector.
(b) Turn the ignition switch to ON.
(c) Measure voltage between terminals IG1 (3) and GND (1, 23) of skid control ECU harness side connector.
OK:
oltage: 10 – 14 V

OK → Go to step 5

NG

4	INSPECT SKID CONTROL ECU CONNECTOR(GND TERMINAL CONTINUITY)

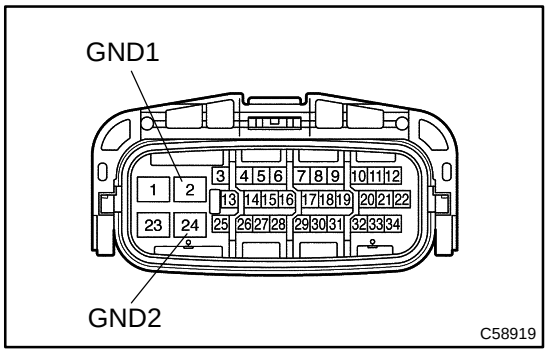

(a) Measure resistance between terminal GND (S1–2, 24) of skid control ECU harness side connector and body ground.
Resistance: 1 Ω or less

NG → **REPAIR OR REPLACE HARNESS OR CONNECTOR**

OK

CHECK AND REPAIR HARNESS AND CONNECTOR

5	GO TO COMBINATION METER SYSTEM(ABS WARNING LIGHT)

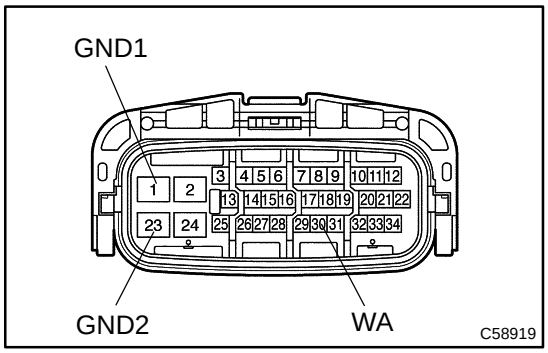

(a) Disconnect the skid control ECU connector.
(b) Using service wire, connect terminals WA (30) and GND (1, 23) of skid control ECU harness side connector.
(c) Turn the ignition switch to ON.
OK:
ABS warning light goes off.

NG → **REPAIR OR REPLACE COMBINATION METER ASSEMBLY**

OK

CHECK AND REPLACE BRAKE ACTUATOR ASSY(See page 05–306)

BRAKE WARNING LIGHT CIRCUIT

CIRCUIT DESCRIPTION

If the ECU detects trouble, it lights the brake warning light at the same time of prohibiting ABS control. At this time, the ECU records a DTC in memory.
Connect terminals Tc and CG of the DLC3 to make the brake warning light blink and output the DTC.

WIRING DIAGRAM

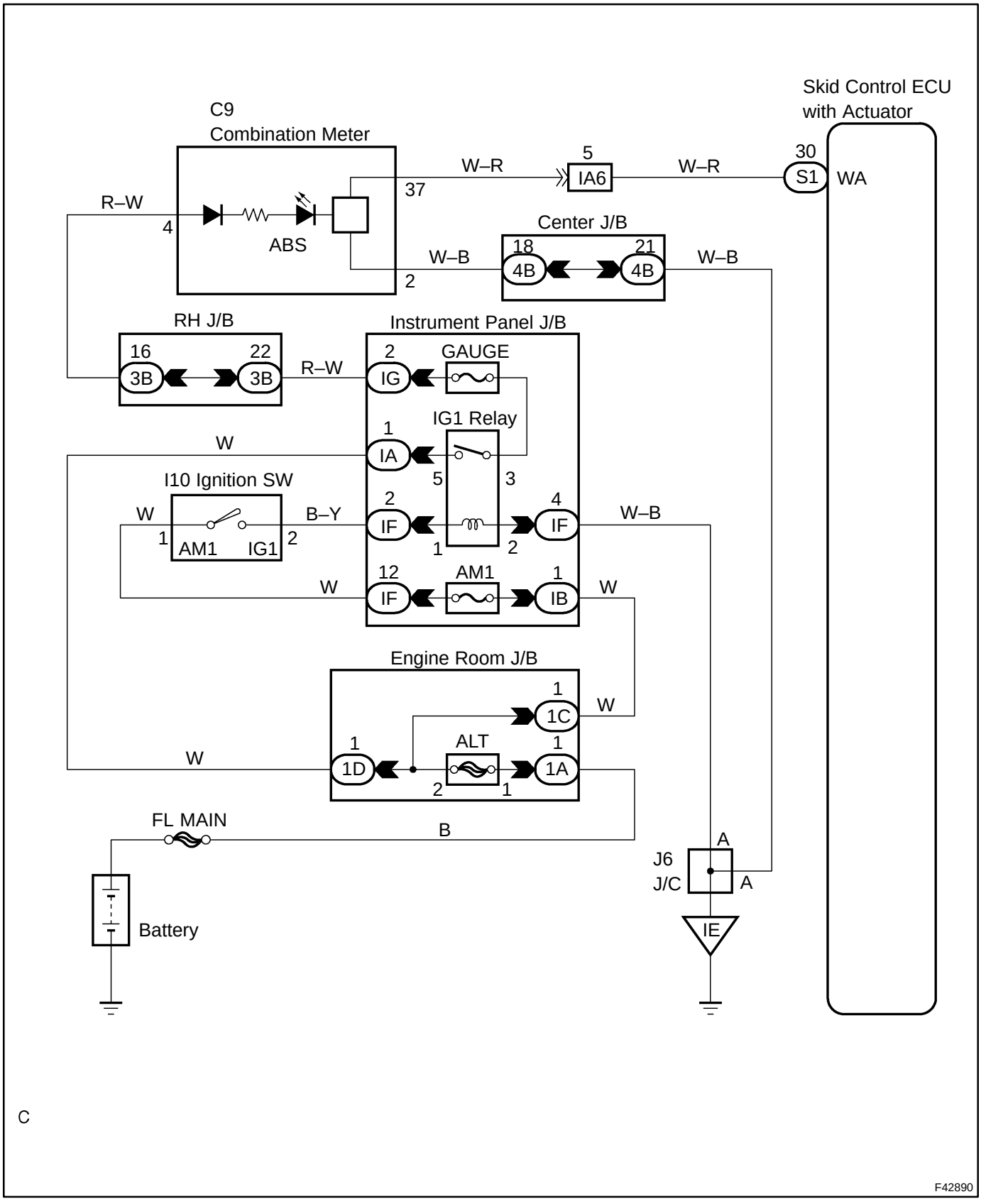

INSPECTION PROCEDURE

1	INSPECT PARKING BRAKE SWITCH CIRCUIT

(a) Check for open and short circuit in parking brake switch circuit (See page 01–30).

NG → REPAIR OR REPLACE PARKING BRAKE SWITCH CIRCUIT

OK

2	INSPECT BRAKE FLUID LEVEL WARNING SWITCH CIRCUIT

(a) Check the brake fluid level in reservoir.
(b) Check for open and shot circuit in brake fluid level warning switch circuit (See page 01–30).

NG → REPAIR OR REPLACE BRAKE FLUID LEVEL WARNING SWITCH CIRCUIT

OK

3	CHECK DTC ONCE MORE

(a) Check for open and short circuit in harness and connector between vacuum warning switch and skid control ECU (See page 05–297).

NG → REPAIR CIRCUIT INDICATED BY OUTPUT CODE

OK

4	INSPECT COMBINATION METER ASSEMBLY(BRAKE WARNING LIGHT CIRCUIT)

(a) Check for open and short circuit in combination meter (See page 01–30).

NG → REPAIR OR REPLACE COMBINATION METER ASSEMBLY

OK

5	CHECK HARNESS AND CONNECTOR(BRAKE ACTUATOR – COMBINATION METER)

(a) Check for open and short circuit in harness and connector between brake actuator and combination meter (See page 01–30).

NG → REPAIR OR REPLACE HARNESS OR CONNECTOR

OK

CHECK AND REPLACE BRAKE ACTUATOR ASSY

DTC	C1241/41	LOW BATTERY POSITIVE VOLTAGE OR ABNORMALLY HIGH BATTERY POSITIVE VOLTAGE

CIRCUIT DESCRIPTION

This is the power source of the ECU, hence the actuators.

DTC No.	DTC Detecting Condition	Trouble Area
C1241/41	Detection of any of conditions 1. through 3. : 1. With vehicle speed at 3 km/h or more, IG1 terminal voltage is 10V or below for 10 sec. or longer. 2. With IG1 terminal voltage at 10V or below, solenoid relay open, pump motor relay open, solenoid fault detecting condition are established 3. Voltage of ECU terminal IG1 remains at more than 17V continues for 1.2 sec. or more.	• Battery • Charging system • Power source circuit

WIRING DIAGRAM

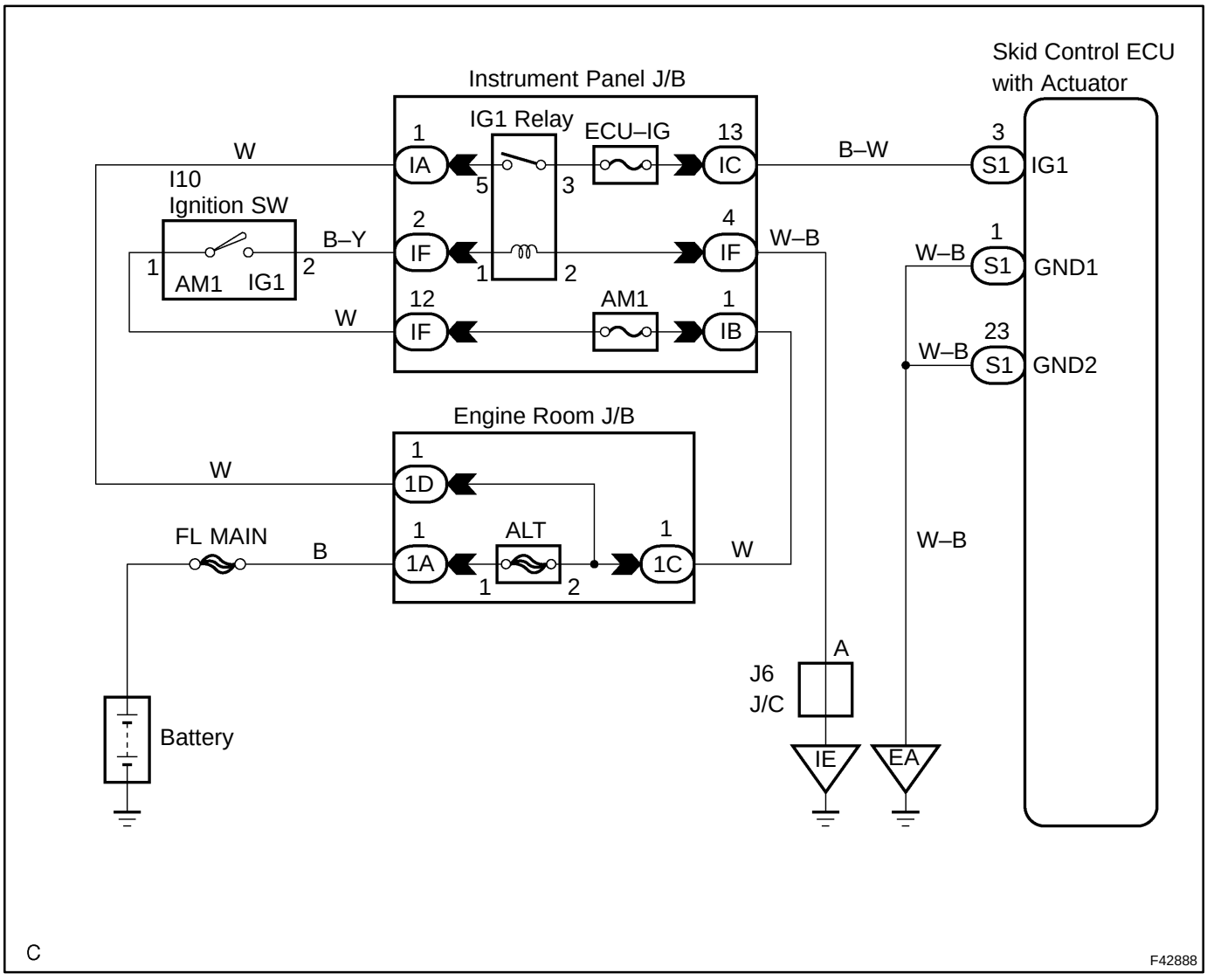

INSPECTION PROCEDURE

1	INSPECT FUSE(ECU–IG FUSE)

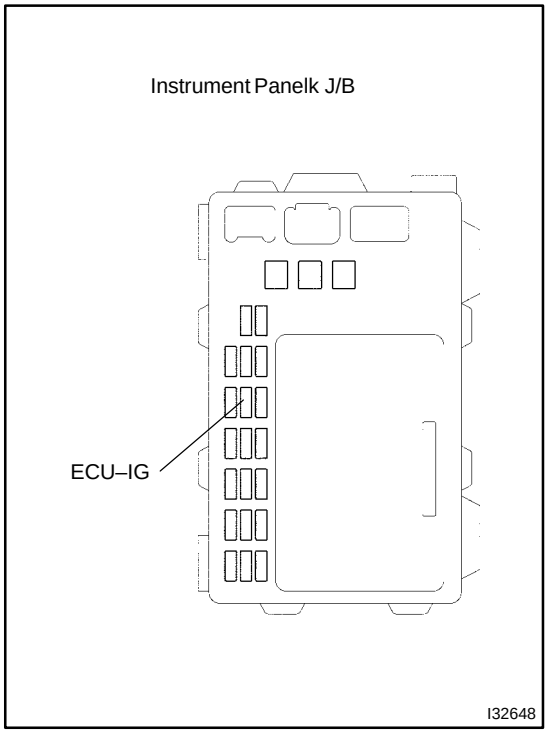

(a) Remove ECU–IG fuse from the instrument panel J/B.
(b) Check continuity of ECU–IG fuse.
OK:
Continuity

NG → **INSPECT FOR SHORT CIRCUIT IN ALL HARNESS AND COMPONENTS CONNECTED TO ECU–IG FUSE**

OK

2	INSPECT BATTERY

OK:
Voltage: 10 – 14 V

NG → **INSPECT CHARGING SYSTEM**

OK

3	INSPECT SKID CONTROL ECU CONNECTOR(IG1 TERMINAL VOLTAGE)

IN CASE OF USING HAND–HELD TESTER:

(a) Check the voltage condition output from the ECU displayed on the hand–held tester.

OK:

”Normal” is displayed.

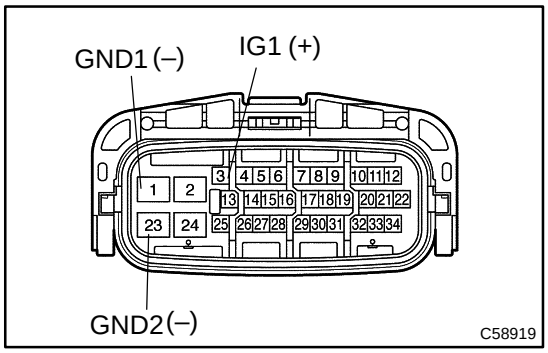

IN CASE OF NOT USING HAND–HELD TESTER:

(a) Disconnect the skid control ECU connector.

(b) Turn the ignition switch to ON.

(c) Measure voltage between terminals IG1 (3) and GND (1, 23) of skid control ECU harness side connector.

OK:

oltage: 10 – 14 V

OK	CHECK AND REPLACE BRAKE ACTUATOR ASSY

NG

4	INSPECT SKID CONTROL ECU CONNECTOR(GND TERMINAL CONTINUITY)

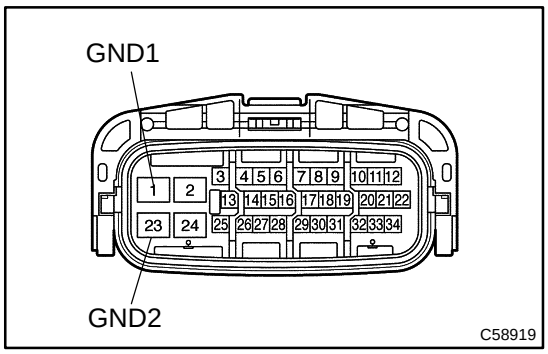

(a) Measure resistance between terminal GND (1, 23) of skid control ECU harness side connector and body ground.

OK:

Resistance: 1 Ω or less

NG	REPAIR OR REPLACE HARNESS OR CONNECTOR

OK

CHECK AND REPLACE BRAKE ACTUATOR ASSY (See page 05–306)

DTC	C1249/49	OPEN CIRCUIT IN STOP LIGHT SWITCH CIRCUIT

CIRCUIT DESCRIPTION

DTC No.	DTC Detecting Condition	Trouble Area
C1249/49	With IG1 terminal voltage at 10V – 16V, ABS not controlling stop light switch circuit is open for 1.0 sec. or longer.	• Stop light switch • Stop light switch circuit

WIRING DIAGRAM

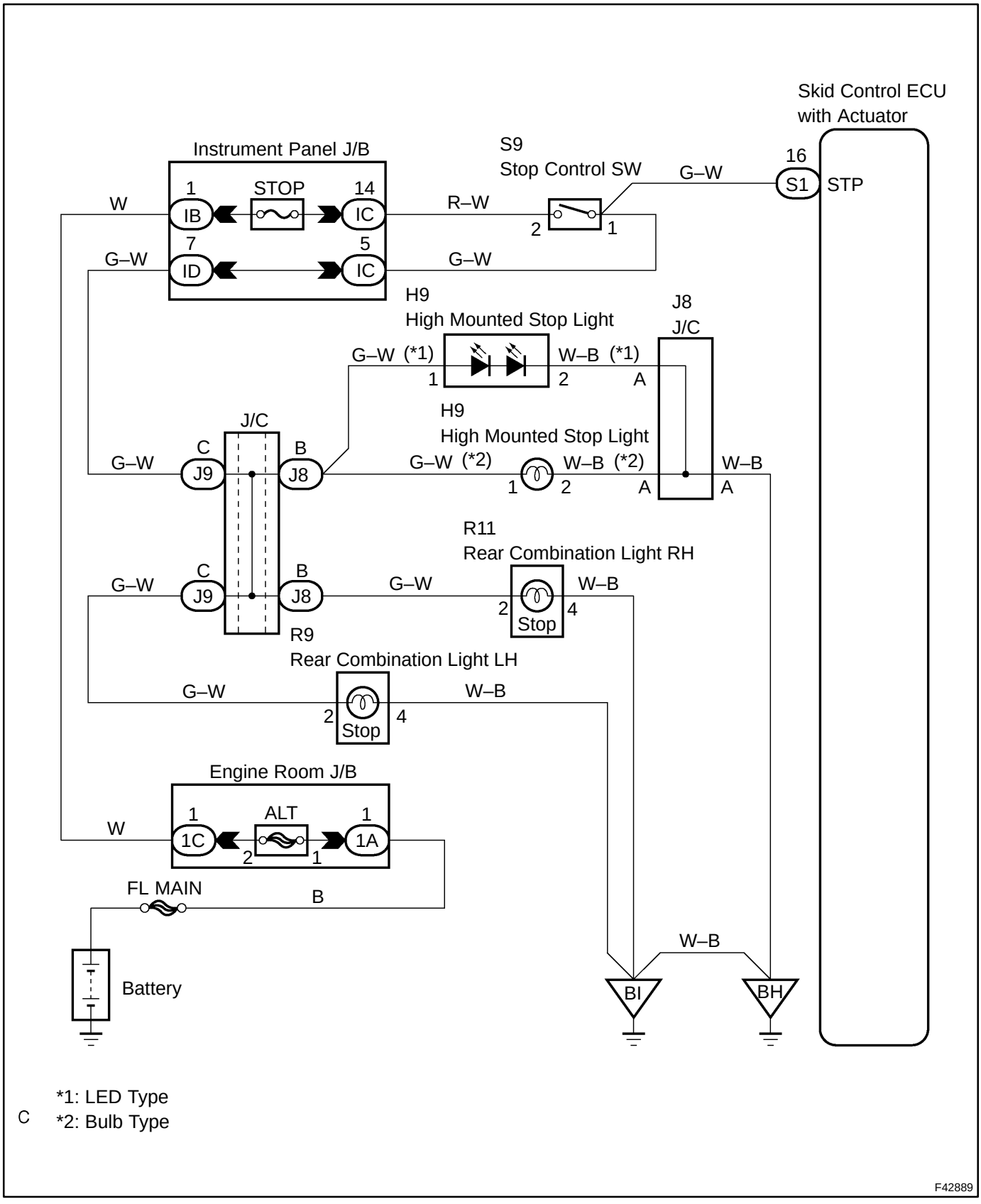

INSPECTION PROCEDURE

1	INSPECT STOP LAMP SWITCH ASSY

(a) Check that the stop light lights up when brake pedal is depressed and turns OFF when the brake pedal is released.

NG → **Go to step 4**

OK

2	INSPECT SKID CONTROL ECU TERMINAL VOLTAGE(STP TERMINAL)

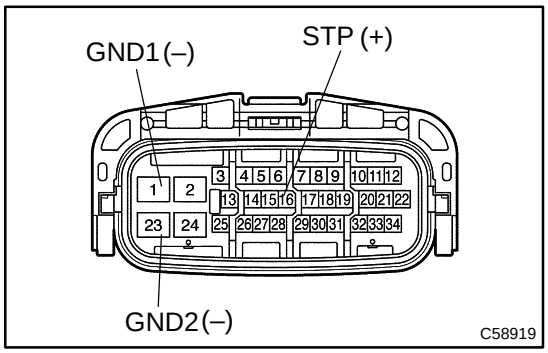

(a) Disconnect skid control ECU connector.
(b) Measure voltage between terminal STP (16) and GND (1, 23) of skid control ECU harness side connector when the brake pedal is depressed.
Voltage: 10 – 14 V

OK → **CHECK AND REPLACE BRAKE ACTUATOR ASSY**

NG

3	CHECK HARNESS AND CONNECTOR(STOP LIGHT SWITCH – SKID CONTROL ECU)

(a) Check for open and short circuit in harness and connector between stop light switch and skid control ECU (See page 01–30).

NG → **REPAIR OR REPLACE HARNESS OR CONNECTOR**

OK

PROCEED TO NEXT CIRCUIT INSPECTION SHOWN ON PROBLEM SYMPTOMS TABLE

4	CHECK HARNESS AND CONNECTOR(STOP LIGHT CIRCUIT)

(a) Check for open and short circuit in harness and connector of the stop light circuit (See page 01–30).

OK → **REPLACE STOP LAMP SWITCH ASSY**

NG

REPAIR OR REPLACE HARNESS OR CONNECTOR

DTC	C1251/51	PUMP MOTOR IS LOCKED/OPEN CIRCUIT IN PUMP MOTOR GROUND

CIRCUIT DESCRIPTION

DTC No.	DTC Detecting Condition	Trouble Area
C1251/51	ABS actuator pump motor is not operating normally during initial check.	ABS pump motor

WIRING DIAGRAM

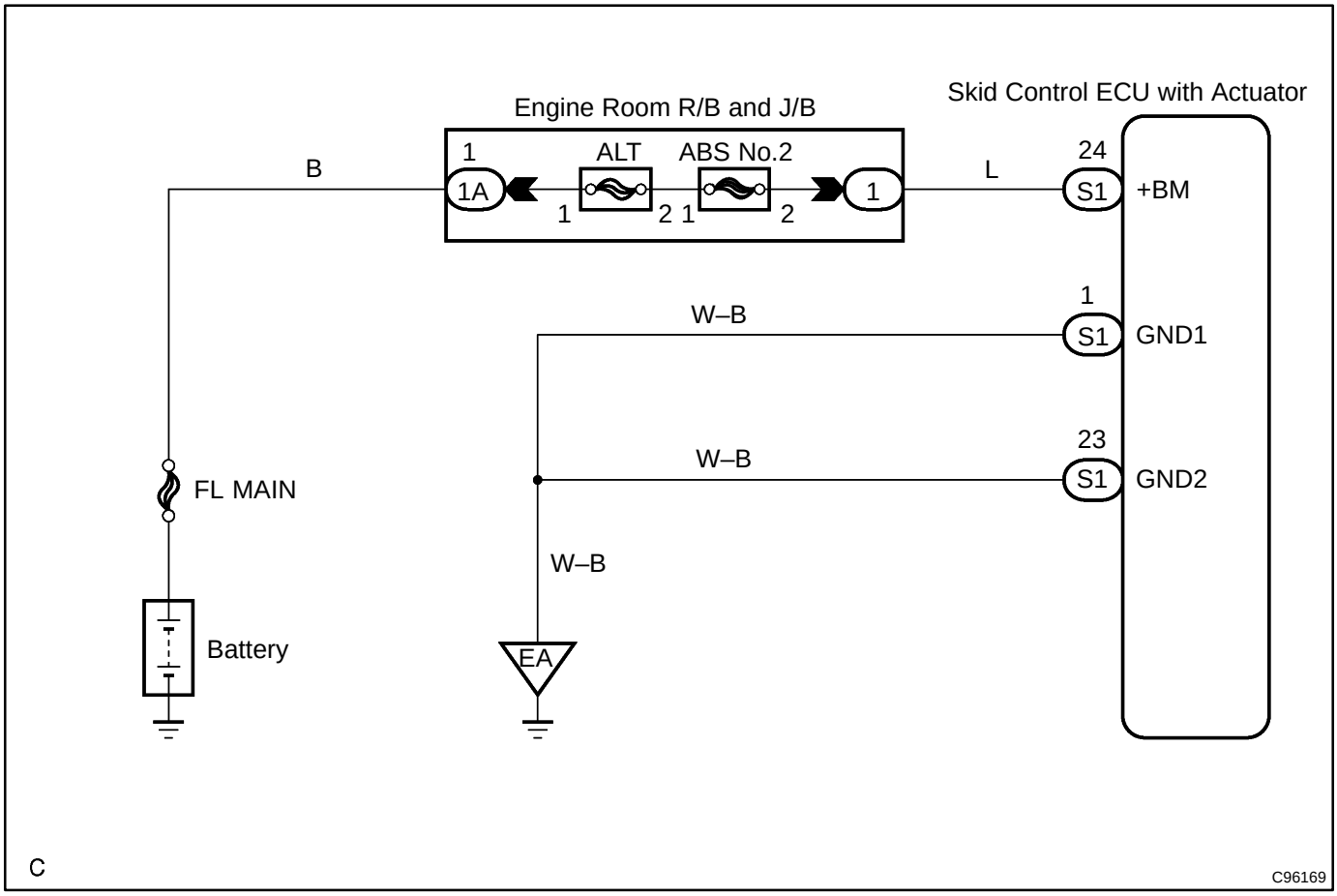

INSPECTION PROCEDURE

HINT:

Start the inspection from step 1 in case of using the hand–held tester and start from step 2 in case of not using hand–held tester.

1	INSPECT BRAKE ACTUATOR ASSY

(a) Select the DATALIST mode on the hand–held tester.

(b) Check the operation sound of the ABS pump motor when operating it with the hand–held tester.

OK:

The operation sound of the ABS pump motor should be heard.

OK → **PROCEED TO NEXT CIRCUIT INSPECTION SHOWN ON PROBLEM SYMPTOMS TABLE**

NG

2	INSPECT SKID CONTROL ECU TERMINAL VOLTAGE(+BM TERMINAL VOLTAGE)

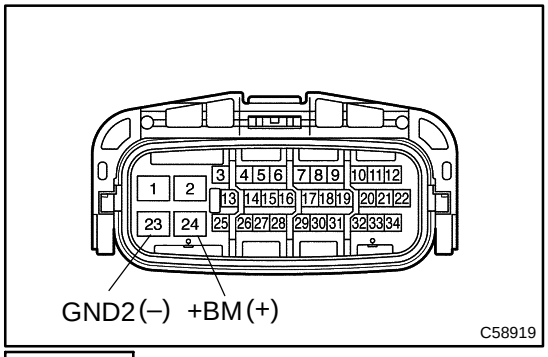

(a) Disconnect the skid control ECU connector.

(b) Measure the voltage between terminal +BM (24) and GND (23) of skid control ECU harness side connector.

OK:

The operation sound of the ABS pump motor should be heard.

NG → **REPAIR OR REPLACE HARNESS OR CONNECTOR**

OK

REPLACE BRAKE ACTUATOR ASSY

DTC	C0226/21	SFR SOLENOID CIRCUIT

DTC	C0236/22	SFL SOLENOID CIRCUIT

DTC	C0246/23	SRR SOLENOID CIRCUIT

DTC	C0256/24	SRL SOLENOID CIRCUIT

CIRCUIT DESCRIPTION

This solenoid goes on when signals are received from the ECU and controls the pressure acting on the wheel cylinders thus controlling the braking force.

DTC No.	DTC Detecting Condition	Trouble Area
C0226/21 C0236/22 C0246/23 C0256/24	Detection of any condition in 1. and 2.: 1. With IG1 terminal voltage at 10V – 16V, solenoid circuit is open or short circuit for 0.05 sec. or longer. 2. With IG1 terminal voltage at 10V – 16V, during ABS control solenoid relay contact is OFF for 0.05 sec. or longer.	• Each solenoid circuit • Brake actuator

WIRING DIAGRAM

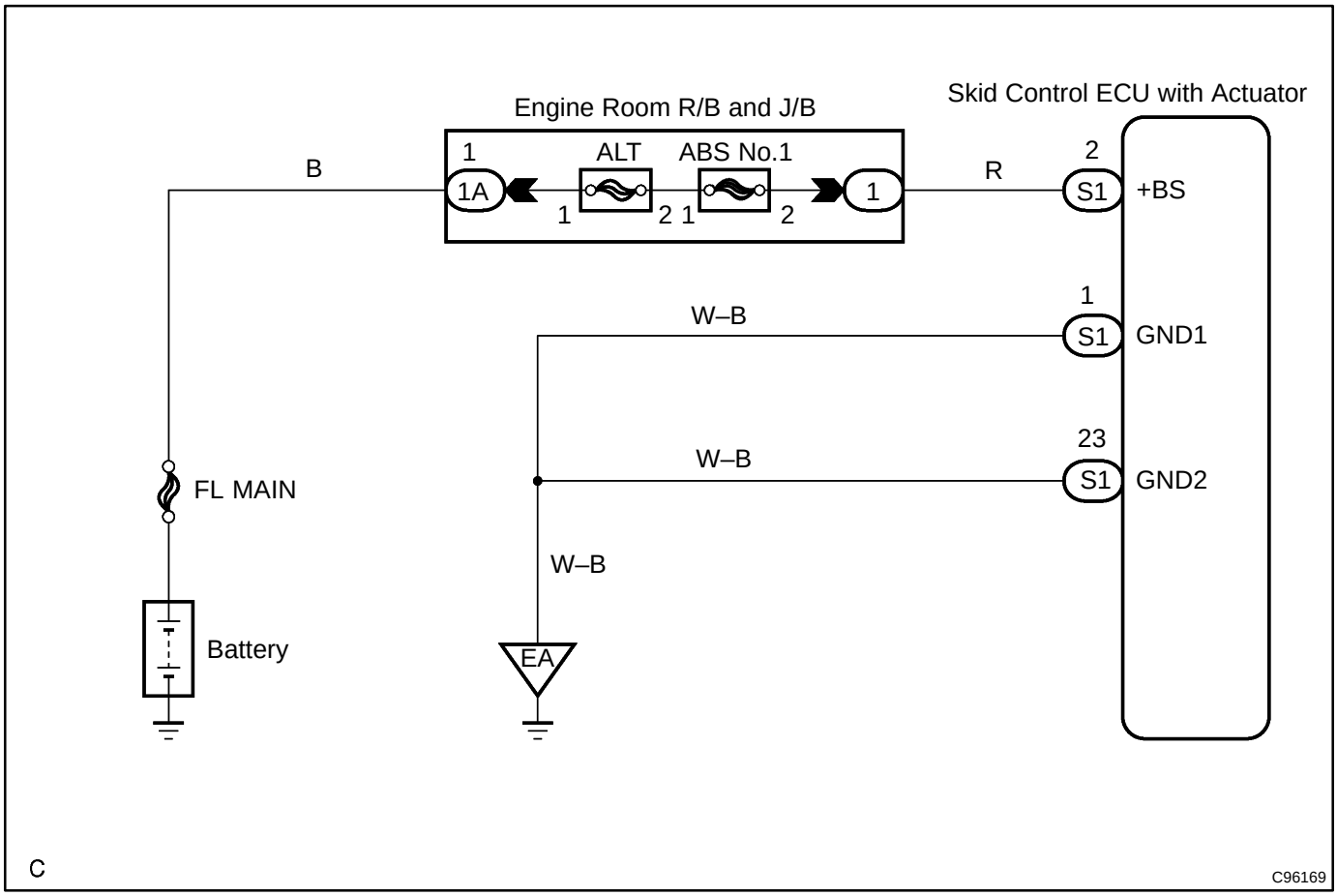

INSPECTION PROCEDURE

1	RECONFIRM DTC

(a) Check if the other DTCs are recorded (See page 05–297).

YES → REPAIR CIRCUIT INDICATED BY OUTPUT CODE

NO

REPLACE BRAKE ACTUATOR ASSY

DTC	C0273/13	OPEN CIRCUIT IN ABS MOTOR RELAY CIRCUIT

DTC	C0274/14	B+ SHORT CIRCUIT IN ABS MOTOR RELAY CIRCUIT

CIRCUIT DESCRIPTION

The ABS motor relay supplies power to the ABS pump motor. While the ABS is activated, the ECU switches the motor relay ON and operates the ABS pump motor.

DTC No.	DTC Detecting Condition	Trouble Area
C0273/13	With IG1 voltage 10V or below during initial check or ABS control, pump motor relay is turned ON, and relay contact is not ON for 0.2 sec. or longer.	• ABS motor relay • ABS motor relay circuit
C0274/14	When pump motor relay is turned OFF, relay contact is ON for 3 sec. or longer.	

WIRING DIAGRAM

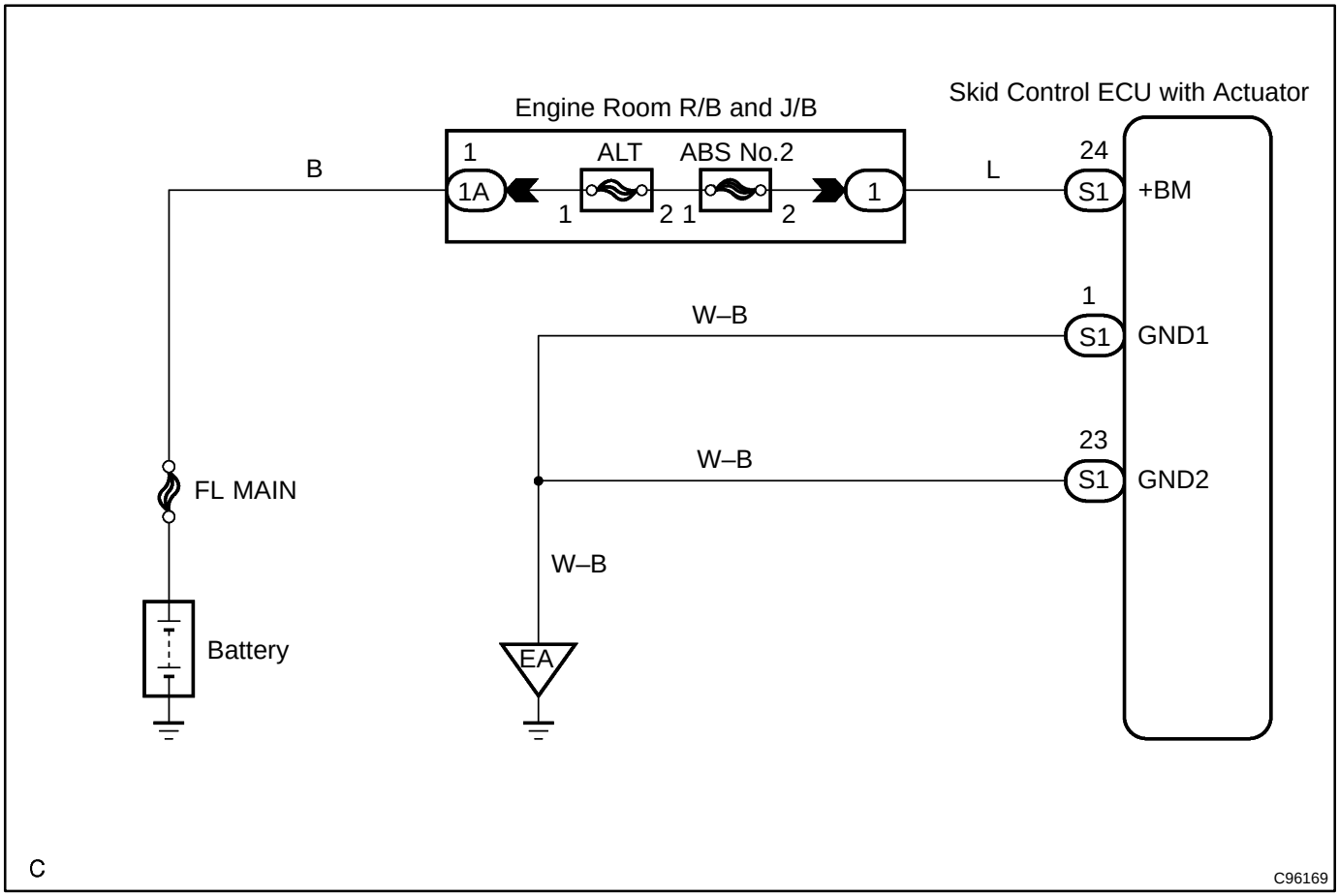

INSPECTION PROCEDURE

HINT:

Start the inspection from step 1 in case of using the hand–held tester and start from step 2 in case of not using the hand–held tester.

1	PERFORM ACTIVE TEST BY HAND–HELD TESTER(ABS MOTOR RELAY)

(a) Check the operation sound of the ABS motor individually when operaing it with the hand–held tester.
OK:
The operation sound of the ABS motor should be heard.

OK → **CHECK AND REPLACE BRAKE ACTUATOR ASSY**

NG

2	INSPECT SKID CONTROL ECU CONNECTOR(+BM TERMINAL VOLTAGE)

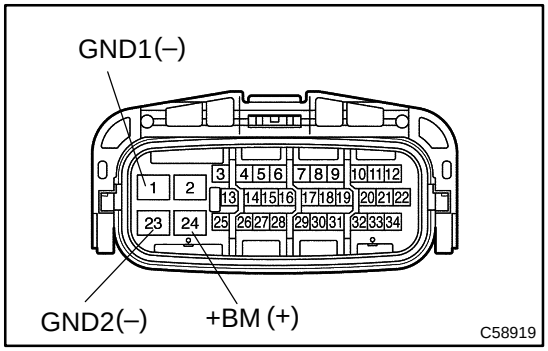

(a) Disconnect the skid control ECU connector.
(b) Measure the voltage between terminals +BM (24) and GND (1, 23) of skid control ECU harness side connector.
Voltage: 10 – 14 V

OK → **CHECK AND REPLACE BRAKE ACTUATOR ASSY**

NG

3	INSPECT FUSE(ABS No.2 FUSE)

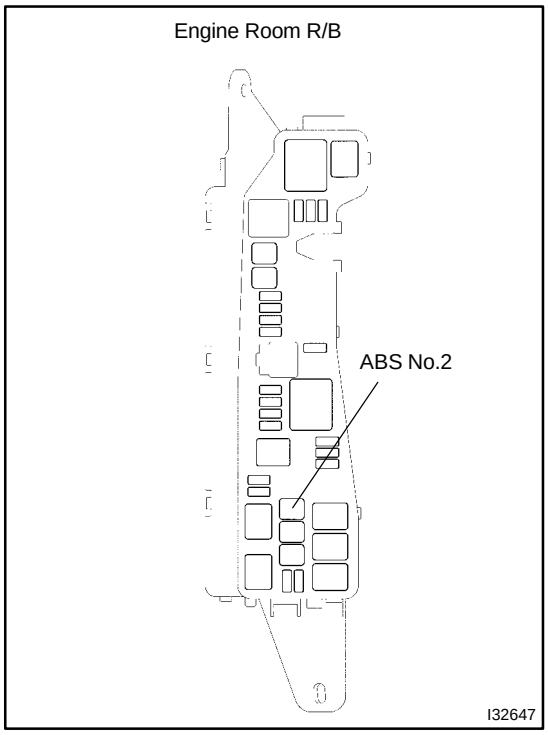

(a) Remove ABS No.2 fuse from the engine room R/B.
(b) Check continuity of ABS No.2 fuse.
OK:
Continuity

NG → **REPLACE INSPECT FOR SHORT CIRCUIT IN ALL HARNESS AND COMPONENTS CONNECTED TO ABS NO. 2 FUSE**

OK

4	INSPECT SKID CONTROL ECU CONNECTOR(GND TERMINAL CONTINUITY)

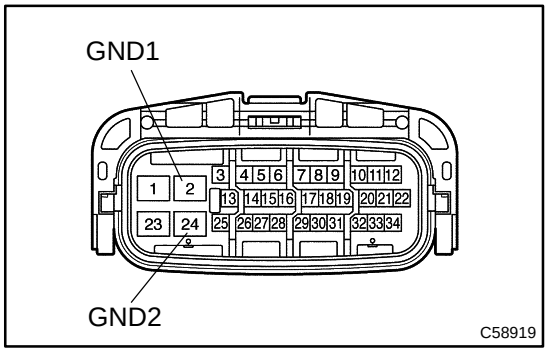

(a) Measure resistance between terminal GND (1,23) of skid control ECU harness side connector and body ground.
Resistance: 1 Ω or less

NG → **CHECK AND REPAIR HARNESS AND CONNECTOR**

OK

CHECK AND REPLACE BRAKE ACTUATOR ASSY (See page 05–306)

DTC	C0278/11	OPEN CIRCUIT IN ABS SOLENOID RELAY CIRCUIT

DTC	C0279/12	SHORT CIRCUIT IN ABS SOLENOID RELAY CIRCUIT

CIRCUIT DESCRIPTION

This relay supplies power to each ABS solenoid. After the ignition switch is turned ON, if the initial check is OK, the relay goes on.

DTC No.	DTC Detecting Condition	Trouble Area
C0278/11	When solenoid relay is turned ON, relay contact is OFF for 0.2 sec. or longer.	• ABS solenoid relay • ABS solenoid relay circuit
C0279/12	Immediately after IG1 is turned ON, when solenoid relay is turned OFF, relay contact is ON for 0.2 sec. or longer.	

WIRING DIAGRAM

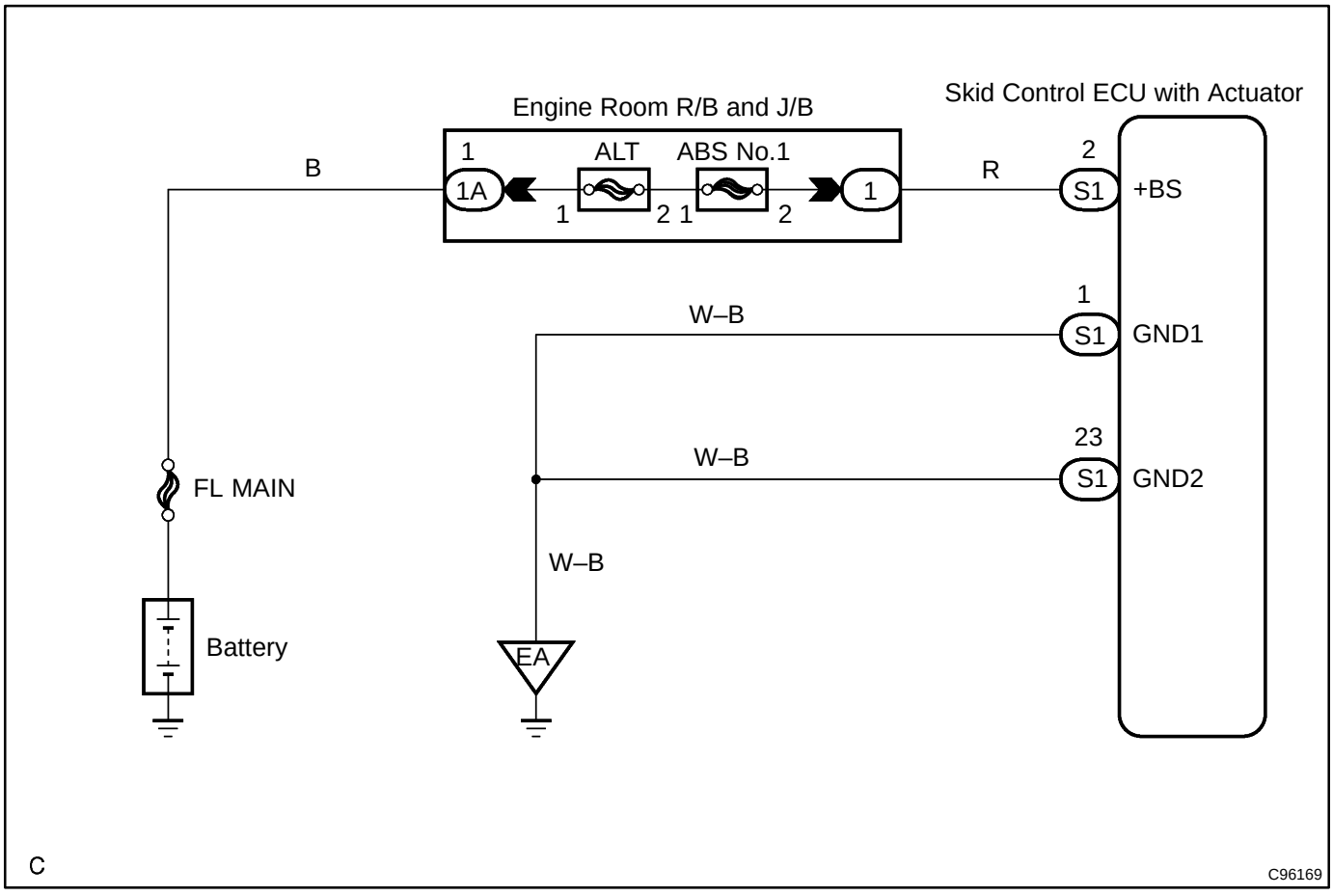

INSPECTION PROCEDURE

1	INSPECT SKID CONTROL ECU CONNECTOR(+BS TERMINAL VOLTAGE)

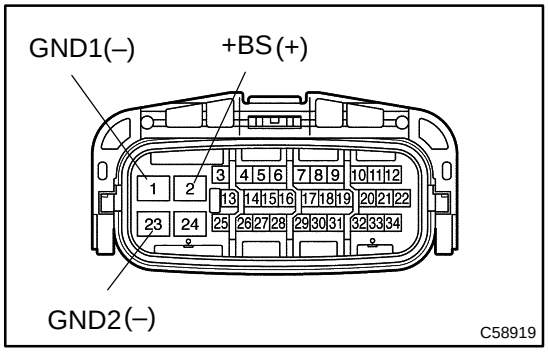

(a) Disconnect the skid control ECU connector.
(b) Measure the voltage between terminals +BS (2) and GND (1, 23) of skid control ECU harness side connector.
Voltage: 10 – 14 V

NG → **REPAIR OR REPLACE HARNESS AND CONNECTOR (+BM CIRCUIT)**

OK

2	RECONFIRM DTC

(a) Check the DTC (See page 05–297).
OK :
Normal code

NG → **END**

OK

3	INSPECT CONTACT CONDITION

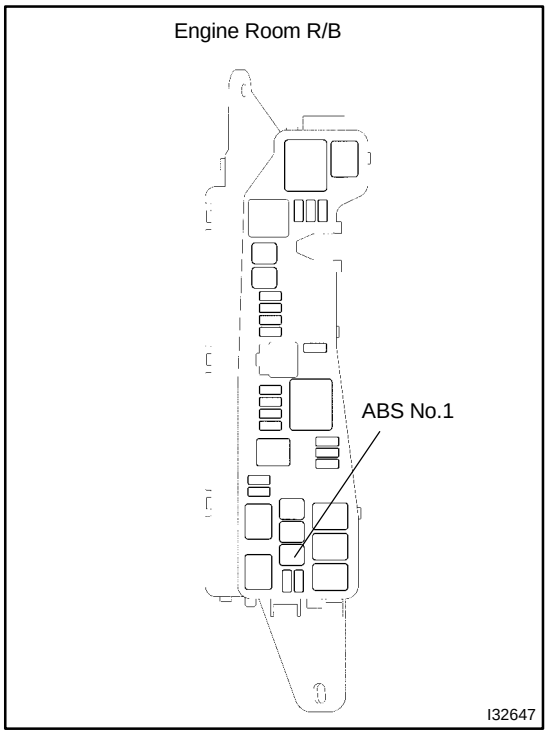

(a) Inspect the condition of the each connector from engine room R/B to skid control ECU.

NG → **REPAIR OR REPLACE HARNESS AND CONNECTOR**

OK →

CHECK AND REPLACE BRAKE ACTUATOR ASSY (See page 05–306)

057U8–04

CUSTOMER PROBLEM ANALYSIS CHECK

ABS Check Sheet

Inspector's Name :

Customer's Name		**Registration No.**	
		Registration Date	/ /
		Frame No.	
Date Vehicle Brought In	/ /	**Odometer Reading**	km miles

Date Problem First Occurred	/ /
Frequency the Problem Occurs	☐ Continuously ☐ Intermittently (times a day)

Symptoms	☐ ABS does not operate.	
	☐ ABS does not operate efficiently.	
	ABS Warning Light Abnormal	☐ Remains ON ☐ Does not Light Up
	Brake Warning Light Abnormal	☐ Remains ON ☐ Does not Light Up

DTC Check	**1st Time**	☐ Normal Code ☐ Malfunction Code (Code)
	2nd Time	☐ Normal Code ☐ Malfunction Code (Code)

Freeze Frame Data	STOP LIGHT SW	☐ ON ☐ OFF
	SYSTEM	☐ NO SYS ☐ ABS ☐ FAIL SF
	#IG ON	
	VEHICLE SPD	MPH km/h

057UA–04

DIAGNOSTIC TROUBLE CODE CHART

NOTICE:

When removing the part, turn the ignition switch to OFF.

HINT:

- Using SST 09843–18040, it connect the terminal Tc and CG of DLC3.
- If any abnormality is not found when inspecting parts, inspect the ECU and ground points for poor contact.
- If a malfunction code is displayed during the DTC check, check the circuit listed that code. For details of each code, turn to the page referred to under the ”See page” for respective ”DTC No.” in the DTC chart.
- When 2 or more DTC’s are recorded, and the problem is not identified, perform circuit inspection of the other DTC’s.

DTC No. (See Page)	Detection Item	Trouble Area
C0200/31 (05–308)	Right front wheel speed sensor signal malfunction	• Right front speed sensor • Right front speed sensor circuit • Right front speed sensor rotor
C0205/32 (05–308)	Left front wheel speed sensor signal malfunction	• Left front speed sensor • Left front speed sensor circuit • Left front speed sensor rotor
C0210/33 (05–312)	Right rear wheel speed sensor signal malfunction	• Right rear speed sensor • Right rear speed sensor circuit • Right rear speed sensor rotor
C0215/34 (05–312)	Left rear wheel speed sensor signal malfunction	• Left rear speed sensor • Left rear speed sensor circuit • Left rear speed sensor rotor
C0226/21 (05–316)	Open or short circuit in ABS actuator solenoid (SFR) circuit	• Brake actuator • SFRR or SFRH circuit
C0236/22 (05–316)	Open or short circuit in ABS actuator solenoid (SFL) circuit	• Brake actuator • SFLR or SFLH circuit
C0246/23 (05–316)	Open or short circuit in ABS actuator solenoid (SRR) circuit	• Brake actuator • SRRR or SRRH circuit
C0256/24 (05–316)	Open or short circuit in ABS actuator solenoid (SRL) circuit	• Brake actuator • SRLR or SRLH circuit
C0273/13 (05–318)	Open circuit in ABS motor relay circuit	• ABS motor relay • ABS motor relay circuit
C0274/14 (05–318)	Short circuit in ABS motor relay circuit	
C0278/11 (05–321)	Open circuit in ABS solenoid relay circuit	• ABS solenoid relay • ABS solenoid relay circuit
C0279/12 (05–321)	Short circuit in ABS solenoid relay circuit	
C1235/35 (05–308)	Foreign matter is attached on the tip of right front sensor	• Right front speed sensor • Right front speed sensor rotor
C1236/36 (05–308)	Foreign matter is attached on the tip of left front sensor	• Left front speed sensor • Left front speed sensor rotor
C1238/38 (05–312)	Foreign matter is attached on the tip of right rear sensor	• Right rear speed sensor • Right rear speed sensor rotor
C1239/39 (05–312)	Foreign matter is attached on the tip of left rear sensor	• Left rear speed sensor • Left rear speed sensor rotor
C1241/41 (05–324)	Low battery voltage or abnormally high battery voltage	• Battery • Charging system • Power source circuit
C1249/49 (05–327)	Open circuit in stop light switch circuit	• Stop light switch • Stop light switch circuit

C1251/51 (05–330)	Pump motor is locked Open circuit in pump motor circuit	• ABS pump motor
Always ON (05–332)	Malfunction in skid control ECU	• Battery • Charging system • Power source circuit • Skid control ECU

DTC of speed sensor check function:

Code No.	Diagnosis	Trouble Area
C1271/71	Low output voltage of right front speed sensor	• Right front speed sensor • Sensor installation • Sensor rotor
C1272/72	Low output voltage of left front speed sensor	• Left front speed sensor • Sensor installation • Sensor rotor
C1273/73	Low output voltage of right rear speed sensor	• Right rear speed sensor • Sensor installation • Sensor rotor
C1274/74	Low output voltage of left rear speed sensor	• Left rear speed sensor • Sensor installation • Sensor rotor
C1275/75	Abnormal change in output voltage of right front speed sensor	Right front speed sensor rotor
C1276/76	Abnormal change in output voltage of left front speed sensor	Left front speed sensor rotor
C1277/77	Abnormal change in output voltage of right rear speed sensor	Right rear speed sensor rotor
C1278/78	Abnormal change in output voltage of left rear speed sensor	Left rear speed sensor rotor

DTC	C0200/31	RIGHT FRONT SPEED SENSOR CIRCUIT

DTC	C0205/32	LEFT FRONT SPEED SENSOR CIRCUIT

DTC	C1235/35	FOREIGN MATTER IS ATTACHED ON TIP OF RIGHT FRONT SENSOR

DTC	C1236/36	FOREIGN MATTER IS ATTACHED ON TIP OF LEFT FRONT SENSOR

CIRCUIT DESCRIPTION

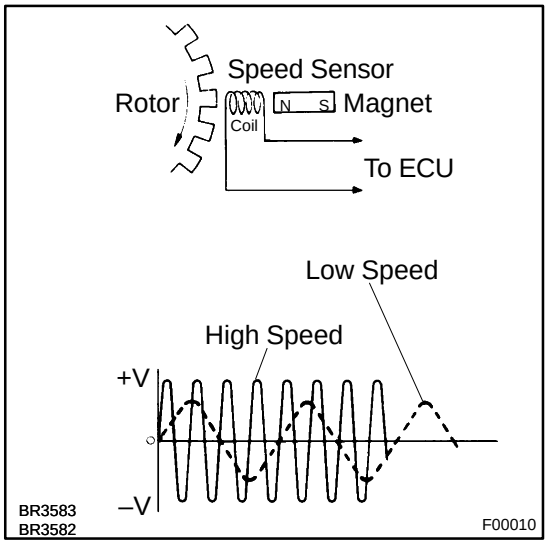

The speed sensor detects wheel speed and transmits the appropriate signals to the ECU. These signals are used for control of the ABS control system. Each of the front and rear rotors has 48 serrations.

When the rotors rotate, the magnetic field generated by the permanent magnet in the speed sensor induces an AC voltage. Since the frequency of this AC voltage changes in direct proportion to the speed of the rotor, the frequency is used by the ECU to detect the speed of each wheel.

DTC No.	DTC Detecting Condition	Trouble Area
C0200/31 C0205/32	Detection of any of conditions 1. through 3.: 1. At vehicle speed of 10 km/h (6 mph) or more, pulses are not input for 15 sec. 2. Momentary interruption of the speed sensor signal occurs at least 7 times in the time between switching the ignition switch ON and switching it OFF. 3. The condition that the speed sensor signal circuit is open continues for 0.5 sec. or more.	• Right front and left front speed sensor • Each speed sensor circuit • Speed sensor rotor
C1235/35 C1236/36	At the vehicle speed of 20 km/h (12 mph) or more, the condition that noise is included in the speed sensor signal continues for 5 sec. or more.	• Right front and left front speed sensor • Speed sensor rotor

HINT:
DTC No. C0200/31 and C1235/35 is the right front speed sensor.
DTC No. C0205/32 and C1236/36 is the left front speed sensor.

WIRING DIAGRAM

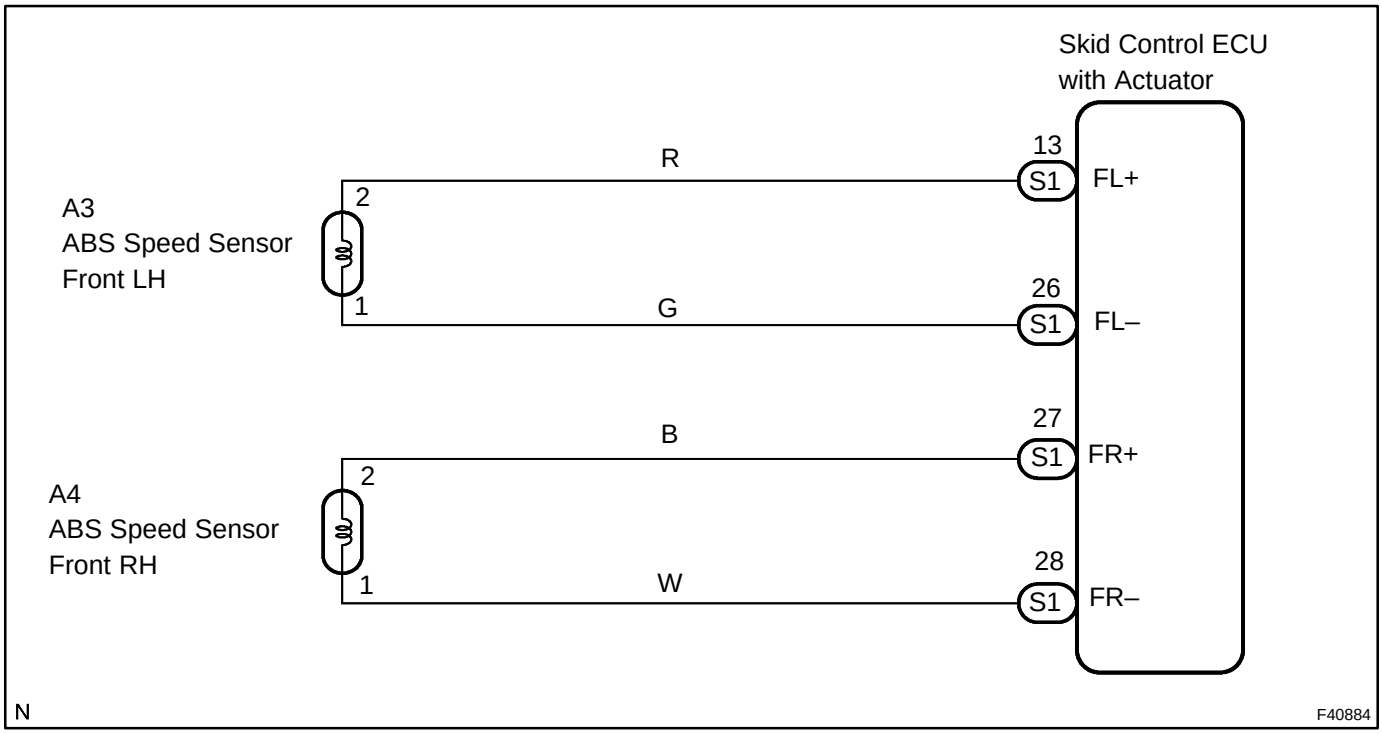

INSPECTION PROCEDURE

HINT:

Start the inspection from step 1 in case of using the hand–held tester and start from step 2 in case of not using the hand–held tester.

1	READ VALUE OF HAND–HELD TESTER(FRONT SPEED SENSOR)

(a) Select the DATALIST mode on the hand–held tester.

(b) Check that there is no difference between the speed value output from the speed sensor displayed by the hand–held tester and the speed value displayed by the speedometer when driving the vehicle.

OK:

There is almost no difference in the displayed speed value.

HINT:

There is tolerance of ±10 % in the speedometer indication.

OK	Go to step 5

NG

2 INSPECT FRONT SPEED SENSOR

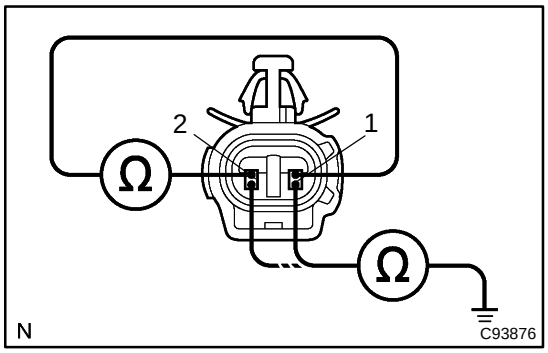

(a) Remove the fender liner.
(b) Disconnect the speed sensor connector.
(c) Measure resistance between terminals 1 and 2 of the speed sensor connector.
OK: 0.6 – 2.5 kΩ or 0.9 – 1.8 kΩ at 20°C
(d) Measure resistance between each of terminals 1 and 2 of speed sensor connector and body ground.
OK:
Resistance: 1 MΩ or higher

NG	REPLACE SPEED SENSOR FRONT RH

NG	REPLACE SPEED SENSOR FRONT LH

NOTICE:
Check the speed sensor signal last (See page 05–297).

OK

3 CHECK HARNESS AND CONNECTOR(FRONT SPEED SENSOR – SKID CONTROL ECU)

(a) Check for open and short circuit in harness and connector between each front speed sensor and skid control ECU (See page 01–30).

NG	REPAIR OR REPLACE HARNESS OR CONNECTOR

OK

4 INSPECT SPEED SENSOR AND SENSOR ROTOR SERRATIONS

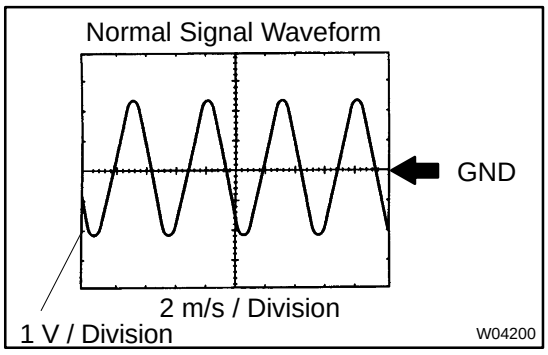

(REFERENCE) INSPECTION USING OSCILLOSCOPE
(a) Connect the oscilloscope to the terminal FR+ – FR– and FL+ – FL– of the skid control ECU.
(b) Drive the vehicle at about 30 km/h (19 mph), and check the signal waveform.

HINT:
- As the vehicle speed (wheel revolution speed) increases, a cycle of the waveform becomes shorter and the fluctuation in the output voltage becomes greater.
- When noise is identified in the waveform on the oscilloscope, error signals are generated due to the speed sensor rotor's scratches, looseness or foreign matter deposited on it.

OK	CHECK AND REPLACE BRAKE ACTUATOR ASSY

NG

5 INSPECT FRONT SPEED SENSOR INSTALLATION

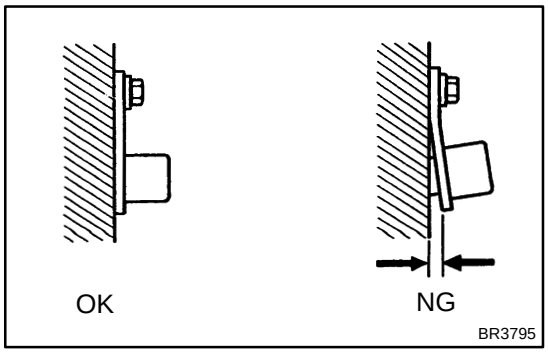

(a) Check the speed sensor installation.
OK:
The installation bolt is tightened properly and there is no clearance between the sensor and front steering knuckle.
Torque: 8.0 N·m (82 kgf·cm, 71 in.·lbf)

NG → **REPLACE SPEED SENSOR FRONT RH**

NG → **REPLACE SPEED SENSOR FRONT LH**

NOTICE:
Check the speed sensor signal last (See page 05–297).

OK

6 INSPECT SPEED SENSOR TIP

(a) Remove the front speed sensor (See page 32–44).
(b) Check the sensor tip.
OK:
No scratches or foreign objects on the sensor tip.

NG → **CLEAN OR REPAIR SPEED SENSOR**

NOTICE:
Check the speed sensor signal last (See page 05–297).

OK

7 INSPECT SPEED SENSOR ROTOR

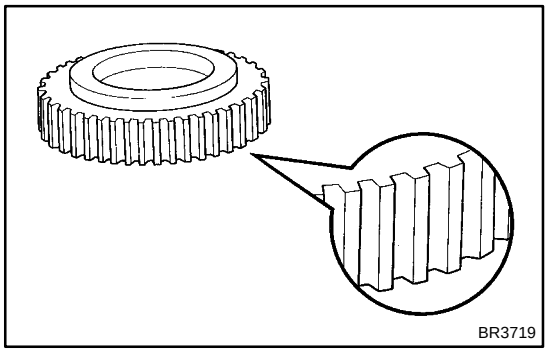

(a) Remove the front speed sensor rotor (See page 30–6).
(b) Check the sensor rotor serrations.
OK:
No scratches, missing teeth or foreign objects.

HINT:
If foreign matter is attached, remove it and after reassembling, check the output waveform.

NG → **CLEAN OR REPAIR SPEED SENSOR ROTOR**

NOTICE:
Check the speed sensor signal last (See page 05–297).

OK

CHECK AND REPLACE BRAKE ACTUATOR ASSY (See page 05–306)

057UB–04

LOCATION

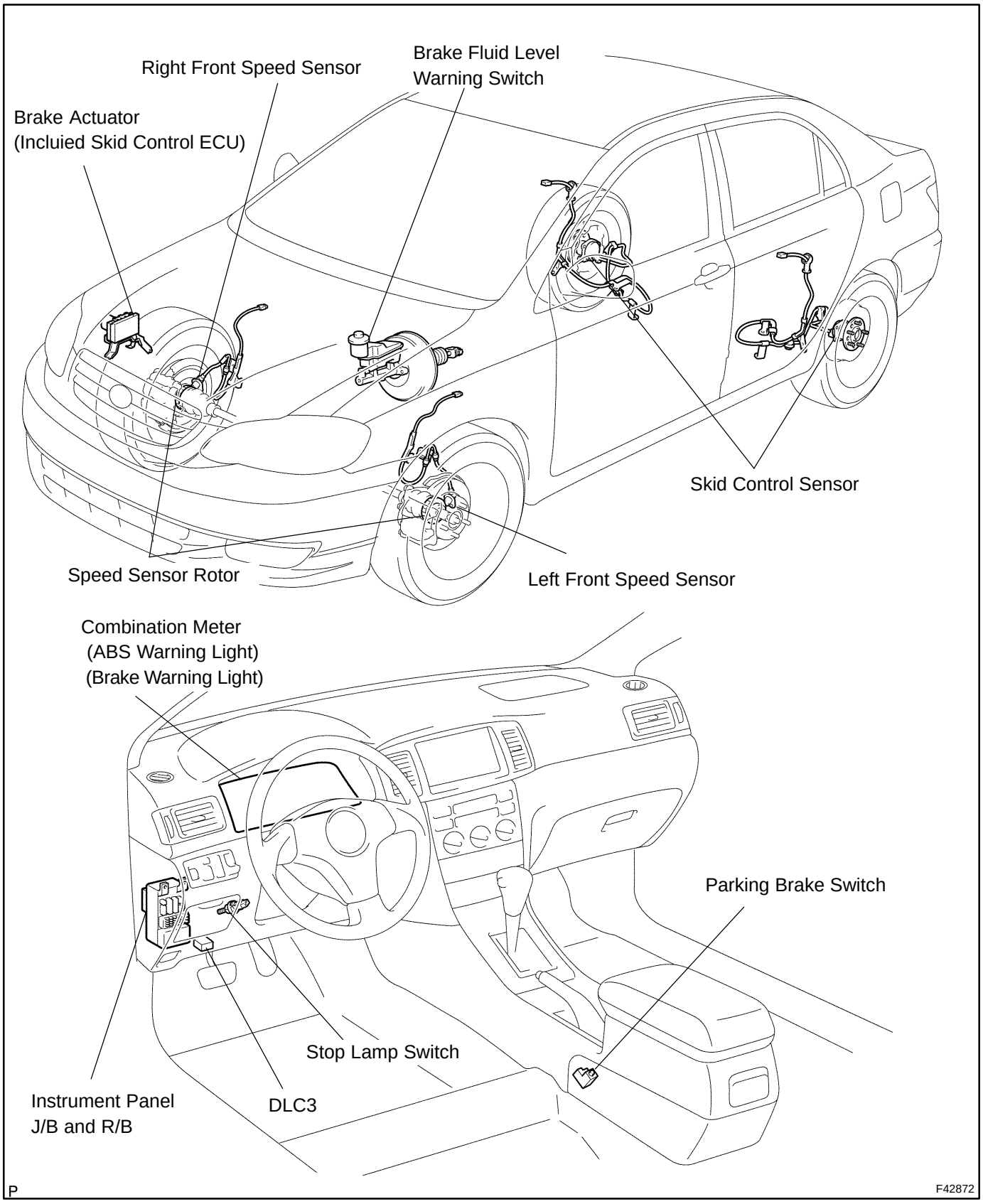

057U9–04

PRE–CHECK

1. DIAGNOSIS SYSTEM

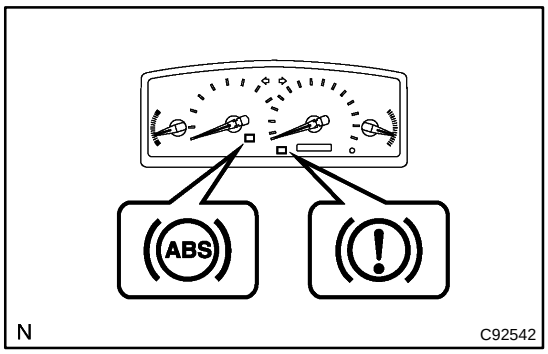

(a) Release the parking brake lever.

(b) Check the warning lights.

When the ignition switch is turned ON, check that the ABS warning light and brake warning light goes on for 3 sec.

HINT:

- When the parking brake is applied or the level of the brake fluid is low, the brake warning light is lit.
- If the indicator check result is not normal, proceed to troubleshooting for the ABS warning light circuit (See page 05–332 or 05–335) or brake warning light circuit (See page 05–338).

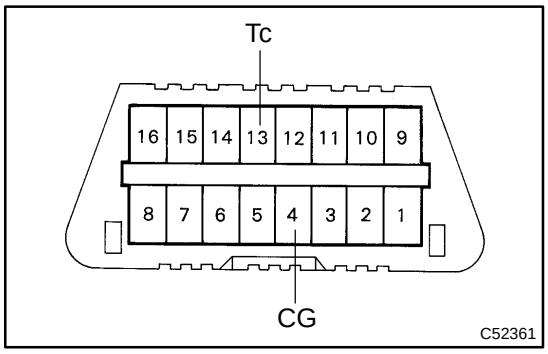

(c) In case of not using hand–held tester:

Check the DTC.

(1) Using SST, it connects terminal Tc and CG of DLC3.

SST 09843–18040

(2) Turn the ignition switch to ON.

(3) Read the DTC from the ABS warning light on the combination meter.

HINT:

- If not code appears, inspect the diagnostic circuit or ABS warning light circuit (See page 05–332 or 05–335).
- As an example, the blinking patterns for normal code and codes 11 and 21 are shown on the left.

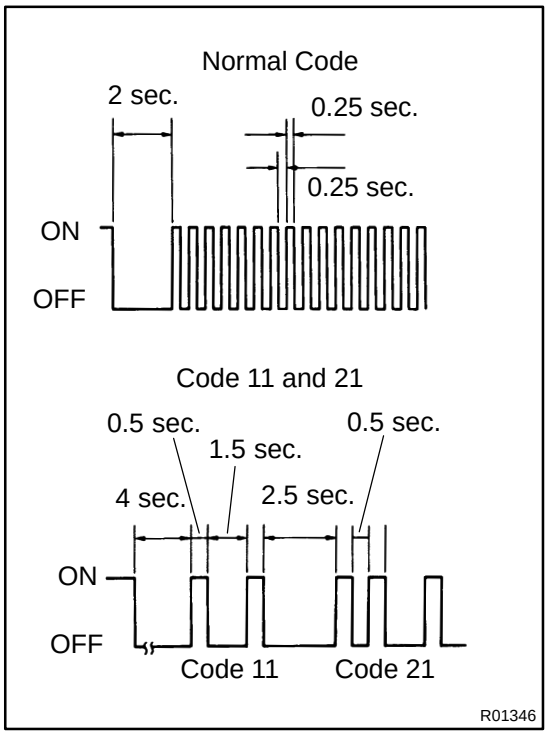

(4) Codes are explained in the code table on page 05–303.

If 2 or more malfunctions are indicated at the same time, the lowest numbered DTC will be displayed 1st.

(5) After completing the check, remove the SST from the DLC3.

SST 09843–18040

(d) In case of using hand–held tester:

Check the DTC.

(1) Read the DTC by following the prompts on the tester screen.

HINT:

Please refer to the hand–held tester operator's manual for further details.

(e) In case of not using hand–held tester:

Clear DTC.

(1) Using SST, it connects the terminal Tc and CG of the DLC3.

SST 09843–18040

(2) Turn the ignition switch to ON.

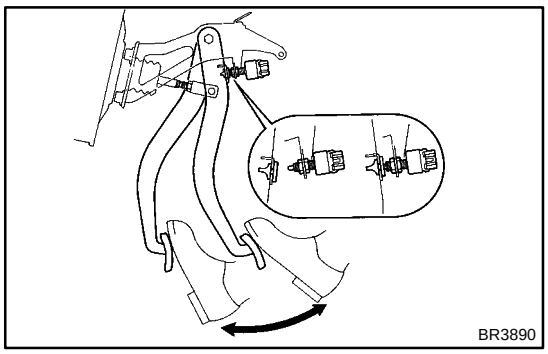

(3) Clear DTC stored in ECU by depressing the brake pedal 8 or more times whitin 5 sec.
(4) Check that the ABS warning light shows the normal code.
(5) Remove the SST from the DLC3.
SST 09843–18040

HINT:
Disconnect the battey cable during repairs will not erase the DTC in the ECU.

(f) In case of using hand–held tester:
Clear the DTC.
(1) Turn the ignition switch to ON.
(2) Operate the hand–held tester to erase the codes.

HINT:
Please refer to the hand–held tester operator's manual for further details.

2. DATA LIST

HINT:
According to the DATA LIST displayed by the Hand–held tester, you can read the value of the switch, sensor, actuator and so on without parts removal. Reading the DATA LIST as a first step of troubleshooting is one of the method to shorten the labor time.

(a) Connect the Hand–held tester to the DLC3.
(b) Turn the ignition switch to ON.
(c) According to the display on tester, read the "DATA LIST".

Item	Measurement Item / Range (Display)	Normal Condition	Diagnostic Note
ABS MOT RELAY	ABS motor relay / ON or OFF		
SOL RELAY	Solenoid relay / ON or OFF		
STOP LIGHT SW	Stop light switch / ON or OFF	ON : Brake pedal depressed OFF : Brake pedal released	
PKB SW	Parking brake switch / ON or OFF	ON : Parking brake applied OFF : Parking brake released	
ABS OPERT FR	ABS operation (FR) / BEFORE or OPERATE	BEFORE : No ABS operation (FR) OPERATE : During ABS operation (FR)	
ABS OPERT FL	ABS operation (FL) / BEFORE or OPERATE	BEFORE : No ABS operation (FL) OPERATE : During ABS operation (FL)	
ABS OPERT RR	ABS operation (RR) / BEFORE or OPERATE	BEFORE : No ABS operation (RR) OPERATE : During ABS operation (RR)	
ABS OPERT RL	ABS operation (RL) / BEFORE or OPERATE	BEFORE : No ABS operation (RL) OPERATE : During ABS operation (RL)	

Item	Measurement Item / Range (Display)	Normal Condition	Diagnostic Note
WHEEL SPD FR	Wheel speed sensor (FR) reading / min.: 0 km/h (0 MPH, max.: 326 km/h (202 MPH)	Actual wheel speed	Speed indicated on speedometer
WHEEL SPD FL	Wheel speed sensor (FL) reading / min.: 0 km/h (0 MPH, max.: 326 km/h (202 MPH)	Actual wheel speed	Speed indicated on speedometer
WHEEL SPD RR	Wheel speed sensor (RR) reading / min.: 0 km/h (0 MPH, max.: 326 km/h (202 MPH)	Actual wheel speed	Speed indicated on speedometer
WHEEL SPD RL	Wheel speed sensor (RL) reading / min.: 0 km/h (0 MPH, max.: 326 km/h (202 MPH)	Actual wheel speed	Speed indicated on speedometer
IG VOLTAGE	ECU power supply voltage / NORMAL or TOO LOW	NORMAL : 9.5 V or over TOO LOW : Below 9.5 V	
SFRR	ABS solenoid (SFRR) ON / OFF		
SFRH	ABS solenoid (SFRH) ON / OFF		
SFLR	ABS solenoid (SFLR) ON / OFF		
SFLH	ABS solenoid (SFLH) ON / OFF		
SRRR	ABS solenoid (SRRR) ON / OFF		
SRRH	ABS solenoid (SRRH) ON / OFF		
SRLR	ABS solenoid (SRLR) ON / OFF		
SRLH	ABS solenoid (SRLH) ON / OFF		
AIR BLD SUPPORT	Air bleed support / SUPPORT or NOT SUP	Supported	
TEST MODE	Test mode / NORMAL or TEST	NORMAL : Normal mode TEST : During test mode	
#CODES	Number of DTC recorded / min.: 0, max.: 255	Min.: 0, max.: 19	

3. ACTIVE TEST

HINT:

Performing the ACTIVE TEST using the Hand–held tester allows the relay, actuator and so on to operate without parts removal. Performing the ACTIVE TEST as a first step of troubleshooting is one of the methods to shorten the labor time.

It is possible to display the DATA LIST during the ACTIVE TEST.

(a) Connect the Hand–held tester to the DLC3.

(b) Turn the ignition switch to ON.

(c) According to the display on tester, perform the ”ACTIVE TEST”.

Item	Vehicle Condition / Test Details	Diagnostic Note
SFRR	Turns ABS solenoid (SFRR) ON / OFF	Operation of solenoid (clicking sound) can be heard
SFRH	Turns ABS solenoid (SFRH) ON / OFF	Operation of solenoid (clicking sound) can be heard
SFLR	Turns ABS solenoid (SFLR) ON / OFF	Operation of solenoid (clicking sound) can be heard
SFLH	Turns ABS solenoid (SFLH) ON / OFF	Operation of solenoid (clicking sound) can be heard
SRRR	Turns ABS solenoid (SRRR) ON / OFF	Operation of solenoid (clicking sound) can be heard
SRRH	Turns ABS solenoid (SRRH) ON / OFF	Operation of solenoid (clicking sound) can be heard
SRLR	Turns ABS solenoid (SRLR) ON / OFF	Operation of solenoid (clicking sound) can be heard
SRLH	Turns ABS solenoid (SRLH) ON / OFF	Operation of solenoid (clicking sound) can be heard
SFRR & SFRH	Turns ABS solenoid SFRR & SFRH ON / OFF	Operation of solenoid (clicking sound) can be heard
SFLR & SFLH	Turns ABS solenoid SFLR & SFLH ON / OFF	Operation of solenoid (clicking sound) can be heard
SRRH & SRRR	Turns ABS solenoid SRH & SRR ON / OFF	Operation of solenoid (clicking sound) can be heard
SRLR & SRLH	Turns ABS solenoid SRLR & SRLH ON / OFF	Operation of solenoid (clicking sound) can be heard
SFRH & SFLH	Turns ABS solenoid SFRH & SFLH ON / OFF	Operation of solenoid (clicking sound) can be heard
SOL RELAY	Turns ABS solenoid relay ON / OFF	Operation of solenoid (clicking sound) can be heard
ABS MOT RELAY	Turns ABS motor relay ON / OFF	Operation of motor can be heard
ABS WARN LIGHT	Turns ABS warning light ON / OFF	Observe combination meter
BRAKE WRN LIGHT	Turns BRAKE warning light ON / OFF	Observe combination meter

4. FREEZE FRAME DATA

(a) The vehicle (sensor) status memorized during ABS operation or at the time of error code detection can be displayed using the hand–held tester.

(b) Only one record of freeze frame data is stored and the freeze frame data generated during ABS operation are constantly updated. Also, the number of the ignition switch's "ON" after the freeze frame data is stored can be memorized up to 31 and it can be displayed.

HINT:

If the ignition switch "ON" operation exceeds 31 times, "31" appears on the display.

(c) If the diagnosis code abnormality occurs, the freeze frame data at the occurrence of the abnormality is stored but the ABS actuation data is deleted.

Hand–held tester display	Measurement Item	Reference Value*
VEHICLE SPD	Vehicle speed	Speed indication of a meter
STOP LIGHT SW	Stop light switch signal	Stop light switch ON: ON, OFF: OFF
# IG ON	Numbers of operations of ignition switch ON after memorizing freeze frame data	0 – 31
SYSTEM	Operate system	ABS operate: ABS

*: If no conditions are specifically stated for "Idling", it means the shift lever is at N or P position, the A/C switch is OFF and all accessory switches are OFF.

5. SPEED SENSOR SIGNAL CHECK

HINT:

If the ignition switch is turned from ON to ACC or LOCK during test mode, DTC will be erased.

(a) In case of not using hand–held tester:
Check the speed sensor signal.

(1) Turn the ignition switch to ON.

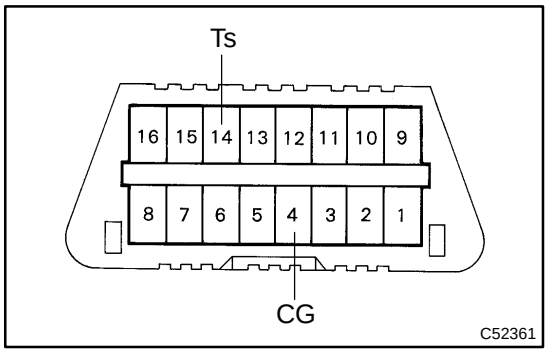

(2) Using SST, it connects the terminal Ts and CG of DLC3.

SST 09843–18040

(3) Start the engine.

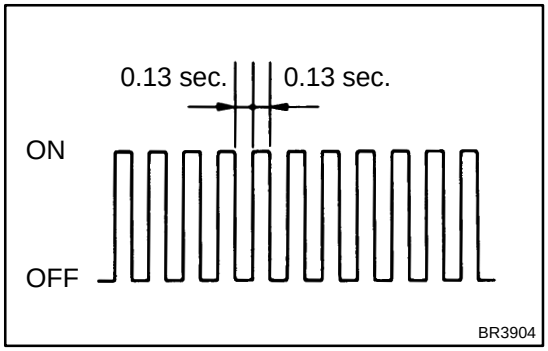

(4) Check that the ABS warning light blinks.

HINT:

If the ABS warning light does not blink, inspect the ABS warning light circuit and Ts circuit (See page 05–332 or 05–335).

(5) Drive the vehicle straight forward at the speed of 45 km/h (28 mph) or over for several seconds and check that the ABS warning light comes off.

HINT:

The sensor check may not be completed if the wheels spin or the steering wheels steered during check.

(6) Stop the vehicle.

(7) Using SST, it connects the terminal Tc and CG of the DLC3.

SST 09843–18040

(8) Read the number of blinks of the ABS warning light.

HINT:

- See the list of DTC shown on the 05–303.
- If every sensor is normal, a normal code is output (A cycle of 0.25 sec. ON and 0.25 sec. OFF is repeated).
- If 2 or more malfunctions are indicated at the same time, the lowest numbered code will be displayed.

Malfunction Code (Example Code 72, 76)

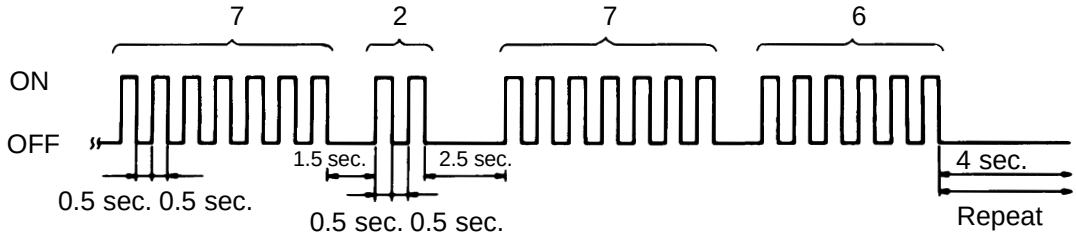

(9) After performing the check, turn the ignition switch to OFF, and remove the SST from the DLC3.

SST 09843–18040

(b) In case of using hand–held tester:

Check the speed sensor signal.

(1) Do step (3) to (6) on the previous page.

(2) Read the DTC by following the prompts on the tester screen.

HINT:

Please refer to the hand–held tester operator's manual for further details.

DTC	C0210/33	RIGHT REAR SPEED SENSOR CIRCUIT

DTC	C0215/34	LEFT REAR SPEED SENSOR CIRCUIT

DTC	C1238/38	FOREIGN MATTER IS ATTACHED ON TIP OF RIGHT REAR SENSOR

DTC	C1239/39	FOREIGN MATTER IS ATTACHED ON TIP OF LEFT REAR SENSOR

CIRCUIT DESCRIPTION

Refer to DTC C0200/31, C0205/32, C1235/35, C1236/36 on page 05–308.

DTC No.	DTC Detecting Condition	Trouble Area
C0210/33 C0215/34	Detection of any of conditions 1. through 3.: 1. At vehicle speed of 10 km/h (6 mph) or more, pulses are not input for 15 sec. 2. Momentary interruption of the speed sensor signal occurs at least 7 times in the time between switching the ignition switch ON and switching it OFF. 3. The condition that the speed sensor signal circuit is open continues for 0.5 sec. or more.	• Right rear and left rear speed sensor • Each speed sensor circuit • Speed sensor rotor
C1238/38 C1239/39	At the vehicle speed of 20 km/h (12 mph) or more, the condition that noise is included in the speed sensor signal continues for 5 sec. or more.	• Right rear and left rear speed sensor • Speed sensor rotor

HINT:
DTC No. C0210/33, C1238/38 is for the right rear speed sensor.
DTC No. C0215/34, C1239/39 is for the left rear speed sensor.

WIRING DIAGRAM

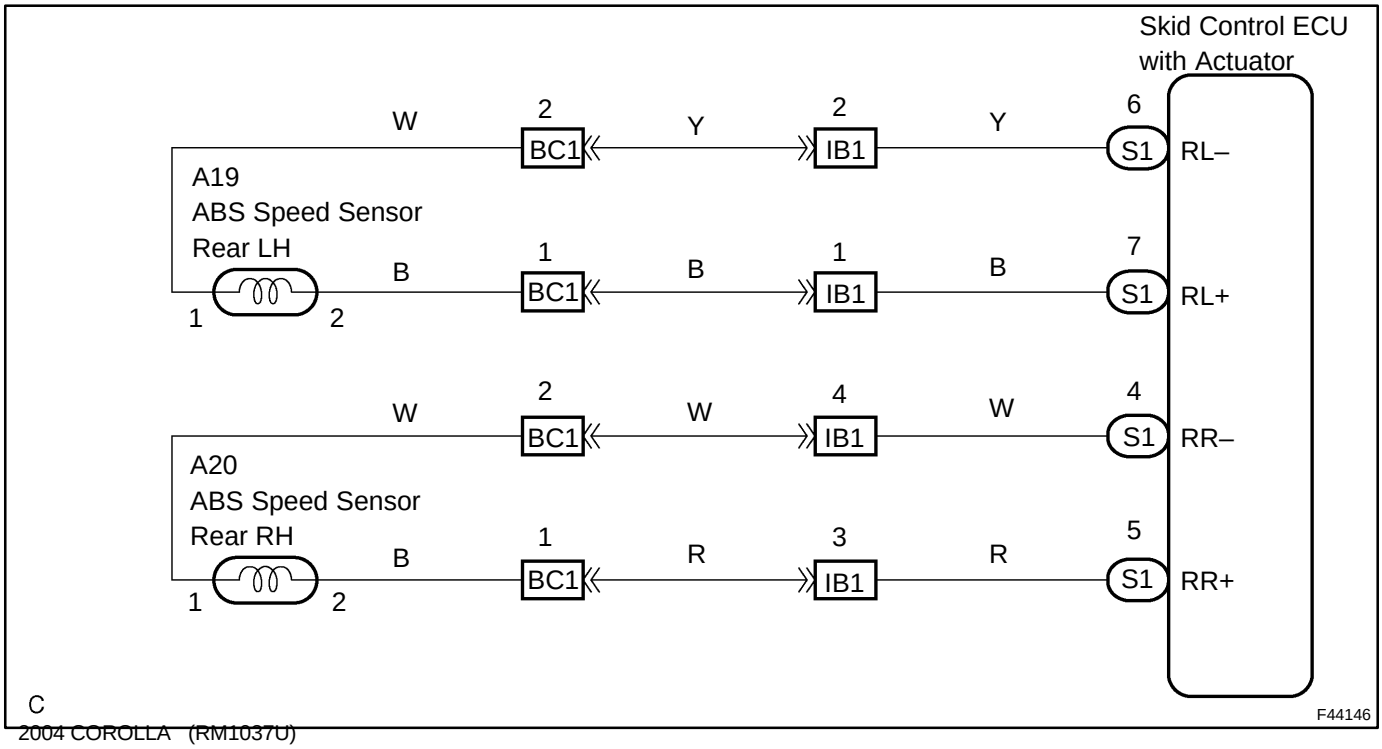

INSPECTION PROCEDURE

HINT:

Start the inspection from step 1 in case of using the hand–held tester and start from step 2 in case of not using the hand–held tester.

1	READ VALUE OF HAND–HELD TESTER(SKID CONTROL SENSOR)

(a) Check that there is no difference between the speed value output from the speed sensor displayed by the hand–held tester and the speed value displayed by the speedometer when driving the vehicle.

OK:

There is almost no difference in the displayed speed value.

HINT:

There is tolerance of ± 10 % in the speedometer indication.

OK → **Go to step 5**

NG

2	INSPECT SKID CONTROL SENSOR

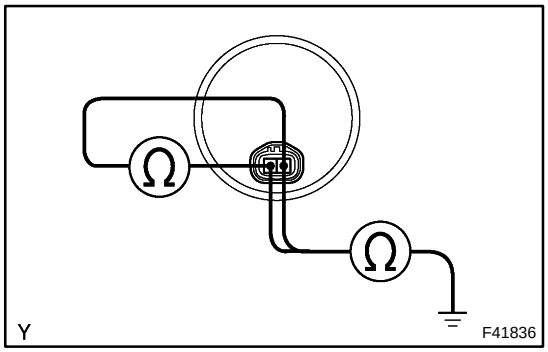

(a) Disconnect the skid control sensor connector.

(b) Measure resistance between terminals 1 and 2 of the skid control sensor connector.

OK:

Resistance: 2.2 kΩ or less

(c) Measure resistance between each of terminals 1 and 2 of skid control sensor connector and body ground.

OK:

Resistance: 1 MΩ or higher

NG → **REPLACE SKID CONTROL SENSOR**

NOTICE:

Check the speed sensor signal last (See page 05–297).

OK

3	CHECK HARNESS AND CONNECTOR(SKID CONTROL SENSOR – SKID CONTROL ECU)

(a) Check for open and short circuit in harness and connector between each skid control sensor and skid control ECU (See page 01–30).

NG → **REPAIR OR REPLACE HARNESS OR CONNECTOR**

OK

4 INSPECT SENSOR AND SENSOR ROTOR SERRATIONS

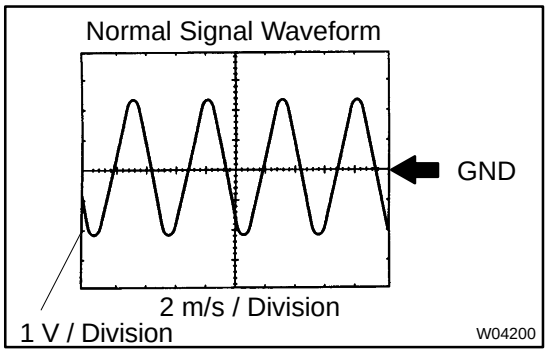

(REFERENCE) INSPECTION USING OSCILLOSCOPE

(a) Connect the oscilloscope to the terminals RR+ – RR– and RL+ – RL– of the skid control ECU.

(b) Drive the vehicle at about 30 km/h (19 mph), and check the signal waveform.

HINT:

- As the vehicle speed (wheel revolution speed) increases, a cycle of the waveform becomes shorter and the fluctuation in the output voltage becomes greater.
- When noise is identified in the waveform on the oscilloscope, error signals are generated due to the speed sensor rotor's scratches, looseness or foreign matter deposited on it.

OK → **CHECK AND REPLACE BRAKE ACTUATOR ASSY**

NG

5 INSPECT SENSOR INSTALLATION

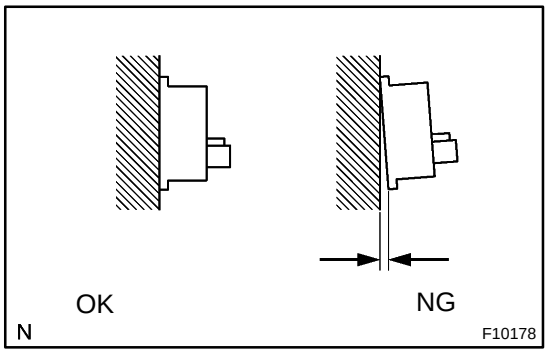

(a) Check the sensor installation.

OK:

There is no clearance between the sensor and rear axle carrier.

NG → **REPLACE SKID CONTROL SENSOR**

NOTICE:

Check the speed sensor signal last (See page 05–297).

OK

6 INSPECT SKID CONTROL SENSOR TIP

(a) Remove the skid control sensor (See page 32–46).

(b) Check the sensor tip.

OK:

No scratches or foreign objects on the sensor tip.

NG → **CLEAN OR REPAIR SKID CONTORL SENSOR**

NOTICE:

Check the speed sensor signal last (See page 05–297).

OK

7	INSPECT SENSOR ROTOR

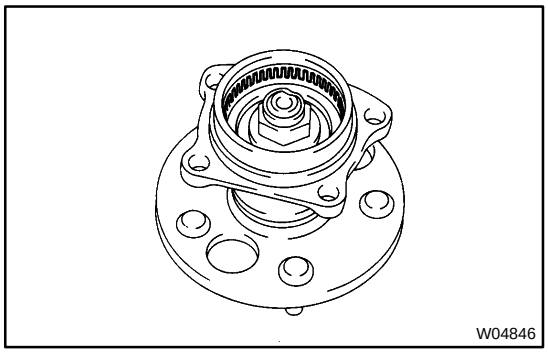

(a) Check the sensor rotor serrations.
OK:
No scratches, missing teeth or foreign objects.

NG → **REPLACE REAR AXLE HUB & BEARING ASSY RH**

NG → **REPLACE REAR AXLE HUB & BEARING ASSY LH**

NOTICE:
Check the speed sensor signal last (See page 05–297).

OK

CHECK AND REPLACE BRAKE ACTUATOR ASSY (See page 05–306)

NOTICE:
Do not reuse skid control sensor.

057UD–04

PROBLEM SYMPTOMS TABLE

If a normal code is displayed during the DTC check but the problem still occurs, check the circuits for each problem symptom in the order given in the table below and proceed to the relevant troubleshooting page.

NOTICE:

When replacing Skid Control ECU, sensor or etc., turn the ignition switch to OFF.

Symptom	Suspect Area	See page
ABS does not operate	When the followings 1. to 4. are all normal and the problem is still occurring, replace the skid control ECU. 1. Check the DTC reconfirming that the normal code is output. 2. IG power source circuit 3. Speed sensor circuit 4. Check the brake actuator with a hand–held tester. If abnormal, check the hydraulic circuit for leakage.	 05–297 05–324 05–308 05–312 32–40
ABS does not operate efficiently	When the following 1. to 4. are all normal and the problem is still occurring, replace the skid control ECU. 1. Check the DTC reconfirming that the normal code is output. 2. Speed sensor circuit 3. Stop light switch circuit 4. Check the brake actuator with a hand–held tester. If abnormal, check the hydraulic circuit for leakage.	 05–297 05–308 05–312 05–327 32–40
ABS warning light abnormality	1. ABS warning light circuit 2. Skid control ECU	05–332 05–335 –
DTC check cannot be done	When the following 1. and 2. are all normal and the problem is still occurring, replace the skid control ECU. 1. ABS warning light circuit 2. Tc terminal circuit	 05–332 05–335 05–341
Speed sensor signal check cannot be done	1. Ts terminal circuit 2. Skid control ECU	05–343 –

TC TERMINAL CIRCUIT

CIRCUIT DESCRIPTION

Connecting terminals Tc and CG of the DLC3 causes the ECU to display the DTC by flashing the ABS warning light.

WIRING DIAGRAM

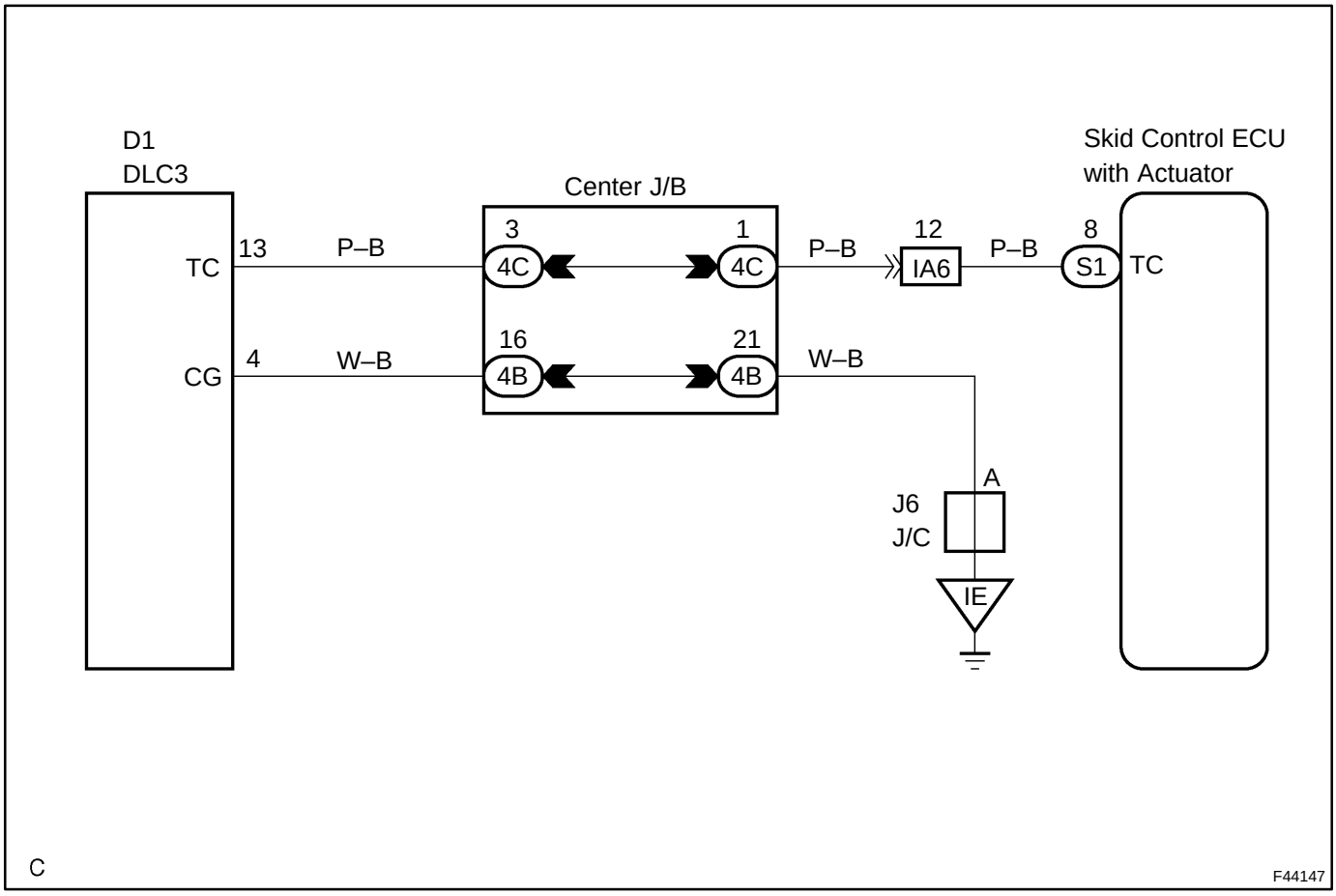

INSPECTION PROCEDURE

1	INSPECT DLC3 TERMINAL VOLTAGE(Tc TERMINAL)

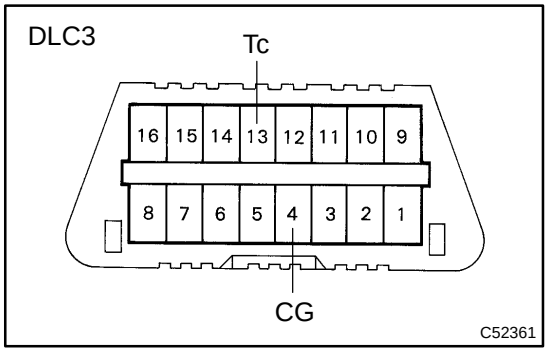

(a) Turn the ignition switch to ON.
(b) Measure voltage between terminals Tc and CG of DLC3.
OK:
Voltage: 10 – 14 V

OK	Go to step 3

NG

2	CHECK HARNESS AND CONNECTOR(DLC3 – BODY GROUND)

(a) Check for open and short circuit in harness and connector between terminal CG of the DLC3 and body ground (See page 01–30).

NG	REPAIR OR REPLACE HARNESS OR CONNECTOR

OK

3	CHECK HARNESS AND CONNECTOR(SKID CONTROL ECU – DLC3)

(a) Check for open and short circuit in harness and connector between terminal Tc of the skid control ECU and DLC3 (See page 01–30).

NG	REPAIR OR REPLACE HARNESS OR CONNECTOR

OK

CHECK AND REPLACE BRAKE ACTUATOR ASSY (See page 05–306)

057UC–04

TERMINALS OF ECU

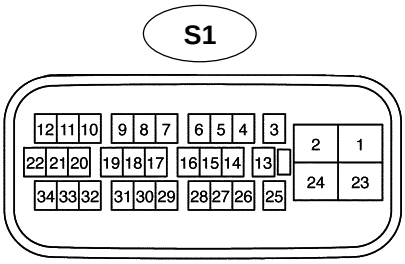

F07812

Symbols (Terminal No.)	Wiring Color	Condition	STD Voltage (V)
+BS (2) – GND (1, 23)	R ⇔ W–B	Always	10 – 14
FL+ (13) – FL– (26)	R ⇔ G	IG switch ON, slowly turn left front wheel	AC generation
RL+ (7) – RL– (6)	B ⇔ Y	IG switch ON, slowly turn left rear wheel	AC generation
BRL (19) – GND (1, 23)	R ⇔ W–B	IG switch ON, brake warning light ON	8 – 14
D/G (11) – GND (1, 23)	L–R ⇔ W–B	IG switch ON	10 – 14
Ts (10) – GND (1,23)	GR ⇔ W–B	IG switch ON	10 – 14
Tc (8) – GND (1, 23)	P–B ⇔ W–B	IG switch ON	10 – 14
STP (16) – GND (1, 23)	G–W ⇔ W–B	Stop light switch ON	8 – 14
+BM (24) – GND (1, 23)	L ⇔ W–B	Always	10 – 14
IG1 (3) – GND (1, 23)	B–W ⇔ W–B	IG switch ON	10 – 14
WA (30) – GND (1, 23)	W–R ⇔ W–B	IG switch ON, ABS warning light ON	8 – 14
FR+ (27) – FR– (28)	B ⇔ W	IG switch ON, slowly turn right front wheel	AC generation
RR+ (5) – RR– (4)	R ⇔ W	IG switch ON, slowly turn right rear wheel	AC generation
SP1 (17) – GND (1, 23)	W–G ↔ W–B	Vehicle driving at about 20 km/h (12 mph)	AC generation
PKB (12) – GND (1, 23)	R–W ↔ W–B	IG switch ON, parking brake switch ON	Below 1.5
		IG switch ON, parking brake switch OFF	10 – 14

ABS WITH EBD SYSTEM (April, 2003)

HOW TO PROCEED WITH TROUBLESHOOTING

057U7–04

1	Vehicle Brought to Workshop

2	Customer Problem Analysis (See page 05–296)

3	Check and Clear DTCs and Freeze Frame Data (See page 05–297)

4	Problem Symptom Confirmation

- Symptom does not occur: Go to step 5
- Symptom occurs: Go to step 6

5	Symptom Simulation (See page 01–30)

6	DTC Check (See page 05–297)

- There is no output: Go to step 7
- There is output: Go to step 8

7	Problem Symptoms Table (See page 05–307)

- Check for fluid leakage and Go to step 10

8	DTC Chart (See page 05–303)

9	Circuit Inspection (See page 05–308 – 05–343)

HINT:
When 2 or more DTC's are recorded, and the problem is not identified, perform circuit inspection of the other DTC's.

10	Identification of Problem

11	Repair

12	Comfirmation Test

End

HINT:
Step 3, 6, 9, 12:
Diagnostic steps permitting the use of the hand–held tester.
Fail safe function:
When a failure occurs in the ABS system, the ABS warning light is lit and the ABS operation is prohibited. In addition to this, when the failure which disables the EBD operation occurs, the brake warning light is lit as well and the EBD operation is prohibited.

Ts Terminal Circuit

CIRCUIT DESCRIPTION

The sensor check circuit detects abnormalities in the speed sensor signal which cannot be detected with the DTC check.
Connecting terminals Ts and CG of the DLC3 starts the check.

WIRING DIAGRAM

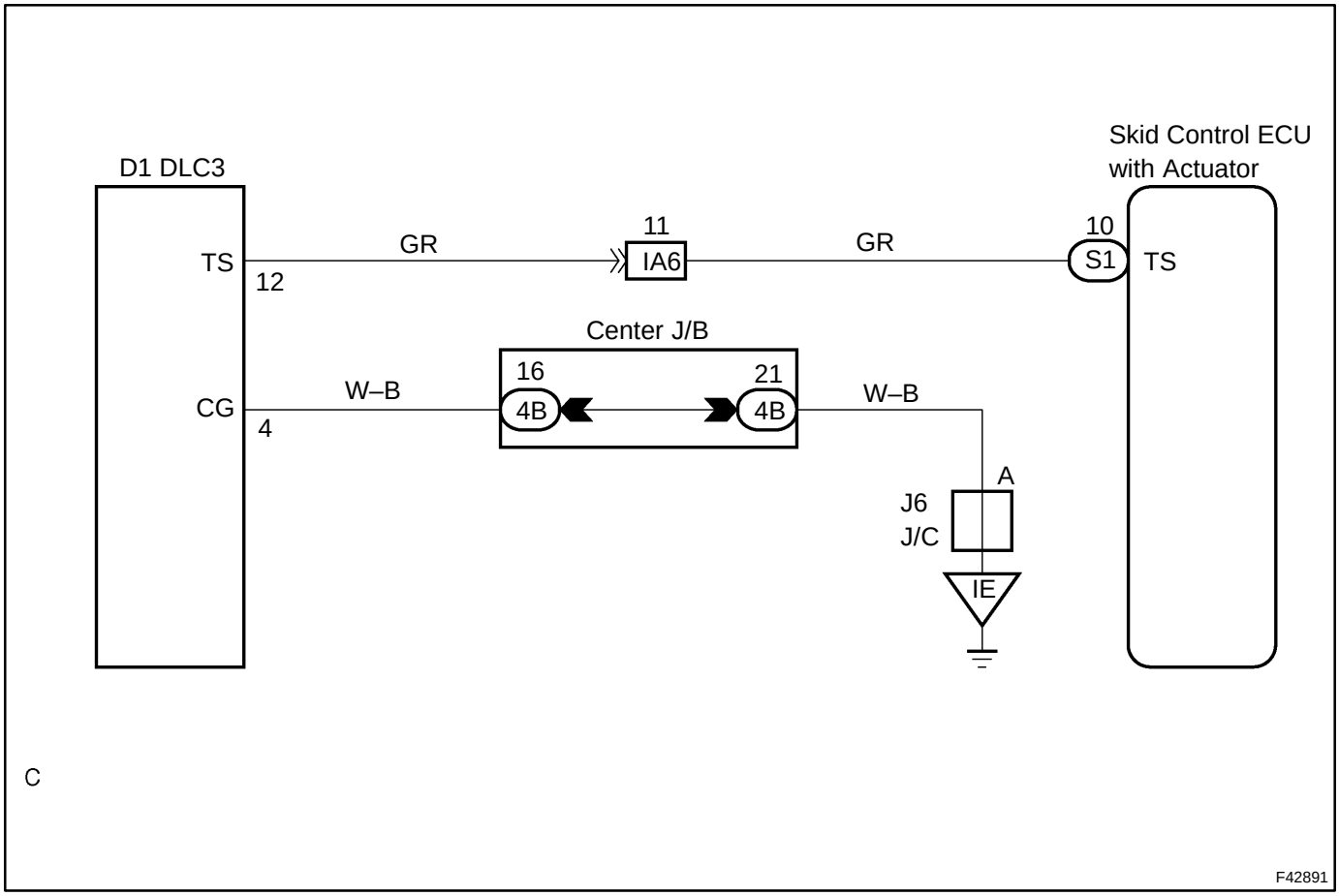

INSPECTION PROCEDURE

1	INSPECT DLC3 TERMINAL VOLTAGE(Ts TERMINAL)

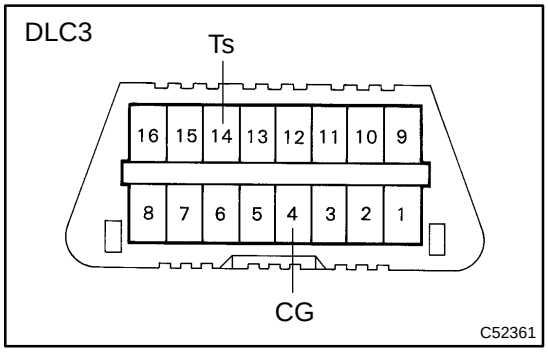

(a) Turn the ignition switch to ON.
(b) Measure voltage between terminals Ts and CG of DLC3.
OK:
Voltage: 10 – 14 V

OK	Go to step 3

NG

2	CHECK HARNESS AND CONNECTOR(DLC3 – BODY GROUND)

(a) Check for open and short circuit in harness and connector between terminal CG of the DLC3 and body ground (See page 01–30).

NG	REPAIR OR REPLACE HARNESS OR CONNECTOR

OK

3	CHECK HARNESS AND CONNECTOR(SKID CONTROL ECU – DLC3)

(a) Check for open and short circuit in harness and connector between terminal Ts of the DLC3 and skid control ECU (See page 01–30).

NG	REPAIR OR REPLACE HARNESS OR CONNECTOR

OK

CHECK AND REPLACE BRAKE ACTUATOR ASSY (See page 05–306)

RADIO BROADCAST CANNOT BE RECEIVED (BAD RECEPTION)

INSPECTION PROCEDURE

1	CHECK IF RADIO AUTO–SEARCH FUNCTIONS PROPERLY

(a) Check if the radio auto–search functions properly.
(1) Perform the auto–search of the radio and check that it functions normally.
Standard: The radio auto–search functions properly.

OK → **CHECK AND REPLACE RADIO RECEIVER ASSY**

NG

2	CHECK OPTIONAL COMPONENT

(a) Check optional component (Sun shade film, telephone antenna etc.).
(1) Check whether or not any optional component is installed, such as the sunshade film and the telephone antenna, is installed.
Standard: Optional component is installed.

OK → **EFFECT FROM OPTIONAL COMPONENT**

NG

3	CHECK ANTENNA FOR NOISE PRODUCTION

(a) Noise Check with Antenna
(1) With the ignition switch in ACC, turn on the radio and choose the AM mode.
(2) Place a tip of a screwdriver or the antenna of the antenna assembly w/ holder and check that the noise heard from the speaker.
Standard: Noise occurs.

OK → **CHECK AND REPLACE RADIO RECEIVER ASSY**

NG

4	INSPECT RADIO RECEIVER ASSY(ANTENNA)

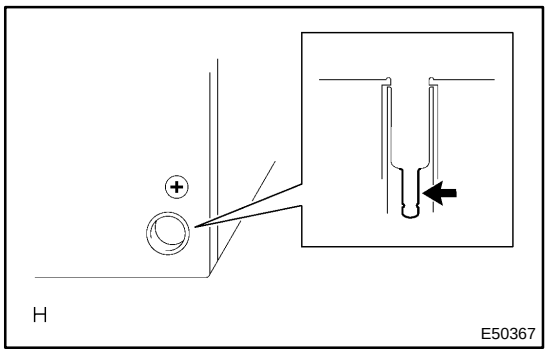

(a) Preparation for Check
  (1) Remove the antenna plug of the radio receiver assembly.

(b) Noise Check
  (1) With the radio receiver assembly connector connected, turn the ignition switch to ACC.
  (2) Turn on the radio and choose the AM mode.
  (3) Place a flat–head screwdriver or a metal such as a thin wire on the antenna jack of the radio receiver assembly and check that the noise heard from the speaker.

Standard: Noise occurs.

OK → **CHECK AND REPLACE RADIO RECEIVER ASSY**

NG

REPLACE AMPLIFIER ANTENNA ASSY

CASSETTE TAPE CANNOT BE EJECTED

WIRING DIAGRAM

See page 05–610

INSPECTION PROCEDURE

1	CHECK IF RADIO AUTO–SEARCH FUNCTIONS PROPERLY

(a) Check if the radio auto–search function properly.
(1) Perform the auto–research of the radio and check that the operation is normal.
Standard: malfunction disappear.

NG → **Go to step 5**

OK

2	PRESS ”EJECT” AND CHECK OPERATION

(a) Press ”EJECT” and check the operation.
(1) Press the cassette tape EJECT switch of the radio receiver assembly for 2 sec or more and check that the cassette tape is ejected.
Standard: The cassette tape is ejected.

NG → **CHECK AND REPLACE RADIO RECEIVER ASSY**

OK

3	CHECK CASSETTE TAPE

(a) Check the cassette tape.
(1) Check that the ejected cassette tape does not have the label peeling, cassette body deformation and others.
Standard: No fault on the cassette tape.

NG → **CASSETTE TAPE FAULTY**

OK

4	REPLACE CASSETTE TAPE WITH ANOTHER AND RECHECK

(a) Replace the cassette tape with another and recheck.
(1) Replace the faulty cassette tape with the normal one to see if the same trouble occurs again.
Standard: malfunction disappear.

OK → **CASSETTE TAPE FAULTY**

NG

5	INSPECT RADIO RECEIVER ASSY(+B, ACC, GND)

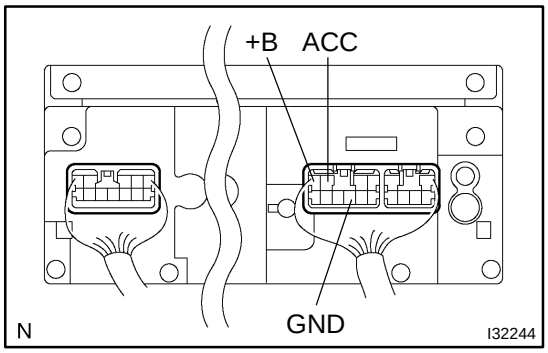

(a) Check that the continuity between terminals at each condition, as shown in the chart.

Standard:

Tester connection	Condition	Specified condition
GND – Body ground	Constant	Continuity

(b) Check that the voltage between terminals at each condition, as shown in the chart.

Standard:

Tester connection	Condition	Specified condition
+B – GND	Constant	10 – 14 V
ACC – GND	Ignition switch ACC or ON	10 – 14 V

OK → **CHECK AND REPLACE RADIO RECEIVER ASSY**

NG

REPAIR OR REPLACE HARNESS OR CONNECTOR

CASSETTE TAPE CANNOT BE INSERTED OR PLAYED

WIRING DIAGRAM

See page 05–610

INSPECTION PROCEDURE

1	CHECK FOR ANY FOREIGN OBJECT

(a) Check for any foreign object.
(1) Check that no foreign object or defect is detected in the cassette tape player of radio receiver assembly.
Standard: No foreign object and defect detected.

NG → **REMOVE FOREIGN OBJECT**

OK

2	CHECK CASSETTE TAPE

(a) Check the cassette tape.
(1) Check that the cassette tape is a normal tape to which music or voice is recorded.
Standard: Proper cassette tape to which music or voice is recorded.

NG → **CASSETTE TAPE FAULTY**

OK

3	REPLACE CASSETTE TAPE WITH ANOTHER AND RECHECK

(a) Replace the cassette tape with another and recheck.
(1) Replace the faulty cassette tape with the normal one to see if the same trouble occurs again.
Standard: The function is recovered to be normal.

OK → **CASSETTE TAPE FAULTY**

NG

4	CHECK IF RADIO AUTO–SEARCH FUNCTIONS PROPERLY

(a) Check if the radio auto–search functions properly.
(1) Perform the auto–search of the radio and check that the operation is normal.
Standard: The operation returns to be normal.

OK → **CHECK AND REPLACE RADIO RECEIVER ASSY**

NG

5	INSPECT RADIO RECEIVER ASSY(+B, ACC, GND)

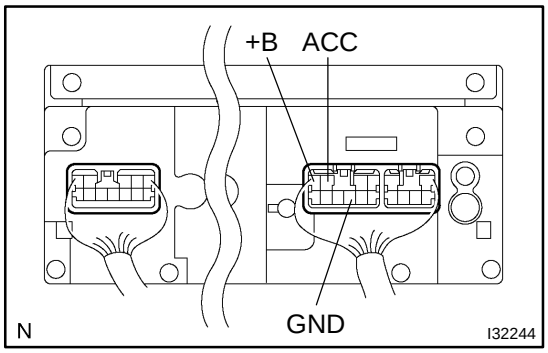

(a) Check that the continuity between terminals at each condition, as shown in the chart.

Standard:

Tester connection	Condition	Specified condition
GND – Body ground	Constant	Continuity

(b) Check that the voltage between terminals at each condition, as shown in the chart.

Standard:

Tester connection	Condition	Specified condition
+B – GND	Constant	10 – 14 V
ACC – GND	Ignition switch ACC or ON	10 – 14 V

OK → **CHECK AND REPLACE RADIO RECEIVER ASSY**

NG

REPAIR OR REPLACE HARNESS OR CONNECTOR

CD CANNOT BE INSERTED OR IS EJECTED RIGHT AFTER INSERTION

WIRING DIAGRAM

See page 05–610

INSPECTION PROCEDURE

1	CHECK IF A PROPER CD IS INSERTED

(a) Check that a proper CD is inserted.
  (1) Make sure that the CD is normal audio CD, and that there is no deformation, flaw, stain, burr and other defects on the CD.
  Standard: Normal audio CD.

Reference:
- Translucent or different–shaped CD cannot be played.
- CD–ROM for personal computers (with music recorded in) and recorded CD–R may not be played.
- Playing an 3.2 in. (8–cm) CD does not require an adapter.

NG → **CD FAULTY**

OK

2	CHECK THAT A PROPER CD IS INSERTED

(a) Check that a proper CD is inserted.
  (1) Check whether or not the CD is inserted upside down.
  Standard: Not upside down.

NG → **SET DISC CORRECTLY**

OK

3	DISC CLEANING

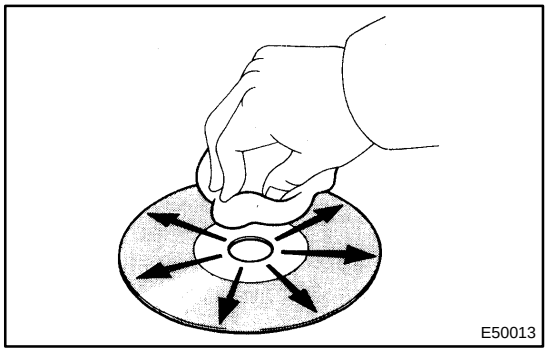
E50013

(a) Disk cleaning
  (1) If the disk gets dirty, clean the disk by wiping the surface from the center to outside in the radial directions with a soft cloth.

NOTICE:
Do not use a conventional record cleaner or anti–static preservative.

OK → **DISC DIRTY**

NG

4	REPLACE CD WITH ANOTHER AND RECHECK

(a) Replace the CD with another and recheck.
(1) Replace the faulty CD with the normal one to see if the same trouble occurs again.
Standard: malfunction disappear.

OK	CD FAULTY

NG

5	CHECK IF RADIO AUTO–SEARCH FUNCTIONS PROPERLY

(a) Check if the radio auto–search function properly.
(1) Perform the auto–research of the radio and check that the operation is normal.
Standard: malfunction disappear.

OK	CHECK AND REPLACE RADIO RECEIVER ASSY

NG

6	INSPECT RADIO RECEIVER ASSY(+B, ACC, GND)

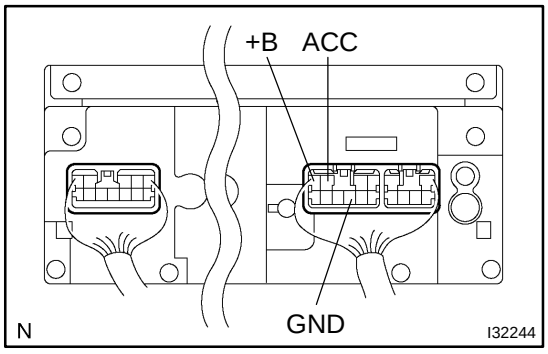

(a) Check that the continuity between terminals at each condition, as shown in the chart.

Standard:

Tester connection	Condition	Specified condition
GND – Body ground	Constant	Continuity

(b) Check that the voltage between terminals at each condition, as shown in the chart.

Standard:

Tester connection	Condition	Specified condition
+B – GND	Constant	10 – 14 V
ACC – GND	Ignition switch ACC or ON	10 – 14 V

OK	CHECK AND REPLACE RADIO RECEIVER ASSY

NG

REPAIR OR REPLACE HARNESS OR CONNECTOR

CD CANNOT BE TAKEN OUT

WIRING DIAGRAM

See page 05–610

INSPECTION PROCEDURE

1	CHECK IF RADIO AUTO–SEARCH FUNCTIONS PROPERLY

(a) Check if the radio auto–search function properly.
(1) Perform the auto–research of the radio and check that the operation is normal.
Standard: malfunction disappear.

NG → **Go to step 5**

OK

2	PRESS ”EJECT” AND CHECK OPERATION

(a) Press ”EJECT”and check the operation.
(1) Press the CD EJECT switch of the radio receiver assembly for 2 sec or more to see if the CD is ejected.
Standard: CD is ejected.

Reference:
If the CD is not ejected, send the vehicle for repair.
Do not try to drag it out by force.

NG → **CHECK AND REPLACE RADIO RECEIVER ASSY**

OK

3	CHECK IF A PROPER CD IS INSERTED

(a) Check that a proper CD is inserted.
(1) Check that in what conditions the sound skipping occurs.
Standard: Driving on the bad road.

NG → **CD FAULTY**

OK

4	REPLACE CD WITH ANOTHER AND RECHECK

(a) Replace the CD with another and recheck.
(1) Check the installation condition of the radio receiver assembly.
Standard: Installed properly.

OK → **CD FAULTY**

NG

5 INSPECT RADIO RECEIVER ASSY(+B, ACC, GND)

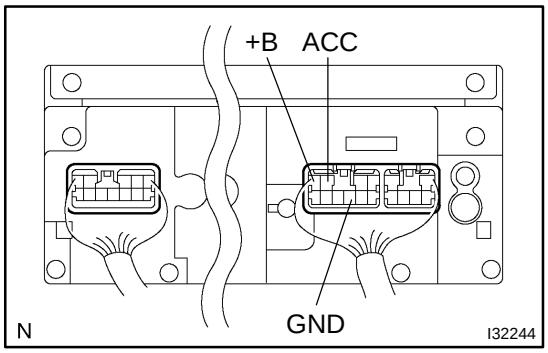

(a) Check that the continuity between terminals at each condition, as shown in the chart.

Standard:

Tester connection	Condition	Specified condition
GND – Body ground	Constant	Continuity

(b) Check that the voltage between terminals at each condition, as shown in the chart.

Standard:

Tester connection	Condition	Specified condition
+B – GND	Constant	10 – 14 V
ACC – GND	Ignition switch ACC or ON	10 – 14 V

OK → **CHECK AND REPLACE RADIO RECEIVER ASSY**

NG

REPAIR OR REPLACE HARNESS OR CONNECTOR

CD SOUND SKIPS

INSPECTION PROCEDURE

1	DISC CLEANING

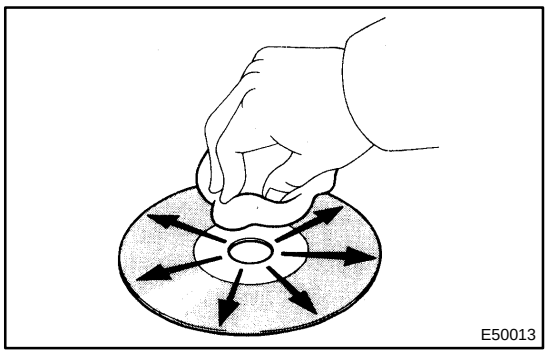

(a) Disk cleaning
  (1) If the disk gets dirty, clean the disk by wiping the surface from the center to outside in the radial directions with a soft cloth.

NOTICE:
Do not use a conventional record cleaner or anti–static preservative.

Standard: malfunction disappear.

OK → **DISC DIRTY**

NG

2	REPLACE CD WITH ANOTHER AND RECHECK

(a) Replace the CD with another and recheck.
  (1) Check the installation condition of the radio receiver assembly.

Standard: malfunction disappear.

OK → **CD FAULTY**

NG

3	CHECK WHEN THIS HAPPENS

(a) Check then this happens.
  (1) Check that in what condition (place) noise occurs.

Standard: Driving on the bumpy road.

OK → **Go to step 5**

NG

4	COMPARE IT WITH ANOTHER CAR OF SAME MODEL

(a) Compare it with another vehicle of the same model.
  (1) Compare with the vehicle of the same type which does not have a trouble to see if there is any difference in the condition of trouble occurrence.

Standard: No difference found.

OK → **SETTING**

NG

5	CHECK OF RADIO RECEIVER ASSEMBLY INSTALLATION

(a) Check of radio receiver assembly installation.
(1) Check the installation condition of the radio receiver assembly.
Standard: Installed properly.

NG → **INSTALL THE RADIO RECEIVER ASSEMBLY PROPERLY**

OK

6	DID THE TEMPERATURE IN THE CABIN CHANGE RAPIDLY?

(a) Did the temperature in the cabin change rapidly?
(1) Check whether or not the rapid temperature change occurred in the cabin.
Standard: The rapid temperature change occurred.

Reference:
The rapid temperature change creates condensation inside the CD player, which may disable playing CD.

OK → **CONDENSATION DUE TO TEMPERATURE CHANGE(LEAVE IT AS IT IS FOR A WHILE BEFORE USING)**

NG

CHECK AND REPLACE RADIO RECEIVER ASSY

SOUND QUALITY IS BAD ONLY WHEN CD IS PLAYED(VOLUME IS TOO LOW)

INSPECTION PROCEDURE

1	REPLACE CD WITH ANOTHER AND RECHECK

(a) Replace the CD with another and recheck.
(1) Check the installation condition of the radio receiver assembly.
Standard: malfunction disappear.

OK → **CD FAULTY**

NG

CHECK AND REPLACE RADIO RECEIVER ASSY

055ZZ–02

CUSTOMER PROBLEM ANALYSIS CHECK

AUDIO SYSTEM Check Sheet

Inspector's name: _____

Customer's Name		**Registration No.**	
		Registration Year/Date	
		Frame No.	
Brought–in Date	/ /	**Odometer Reading**	**km Mile**

Date of First Occurrence	/ /
Frequency of Problem Occurrence	☐ Constant ☐ Intermittent (Times a day)

Problem Symptom	☐ **Switch**
	☐ **Radio**
	☐ **CD**
	☐ **Noise**

DTC Check	**Parts name**	**DTC (1st time).**	**DTC (2nd time).**
	Radio receiver assy		

I30195

AUDIO SYSTEM (April, 2003)

055ZX–05

DESCRIPTION

1. RADIO WAVE BAND

The radio wave bands used in radio broadcasting are as follows:

Frequency	30 kHz	300 kHz	3 MHz	30 MHz	300 MHz
Designation	LF	MF	HF	VHF	
Radio wave		AM ⟷		FM ⟷	
Modulation	Amplitude modulation			Frequency modulation	

LF: Low Frequency
MF: Medium Frequency
HF: High Frequency
VHF: Very High Frequency

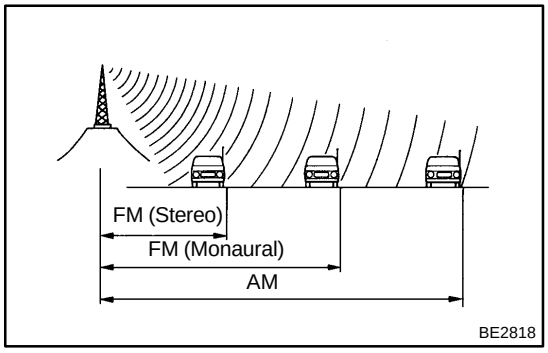

2. SERVICE AREA

(a) There are great differences in the size of the service area for AM and FM broadcasting. Sometimes FM stereo broadcast cannot be received even through AM can be received very clearly.
Not only does FM stereo have the smallest service area, but it also picks up static and other types of interference (”noise”) easily.

3. RECEPTION PROBLEMS

HINT:
Besides the problem of static, there are also the problems called ”fading”, ”multipath” and ”fade out”. These problems are caused not by electrical noise but by the nature of the radio waves themselves.

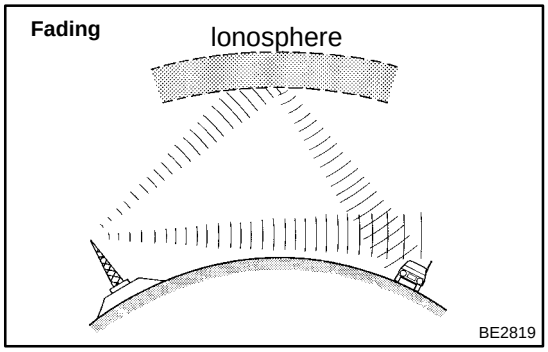

(a) Fading
Besides electrical interference, AM broadcasts are also susceptible to other types of interference, especially at night. This is because AM radio waves bounce off the ionosphere at night. These radio waves then interfere with the signals from the same transmitter that reach the vehicle’s antenna directly. This type of interference is called ”fading”.

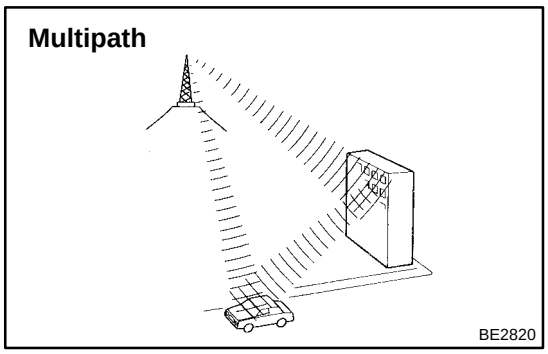

(b) Multipath
Interference caused by reflection of radio waves against obstructions is called ”Multipath”. Multipath occurs when radio signals emitted from the broadcast transmitter antenna are reflected against tall buildings or mountains and interferes with other signals which is to be received directly.

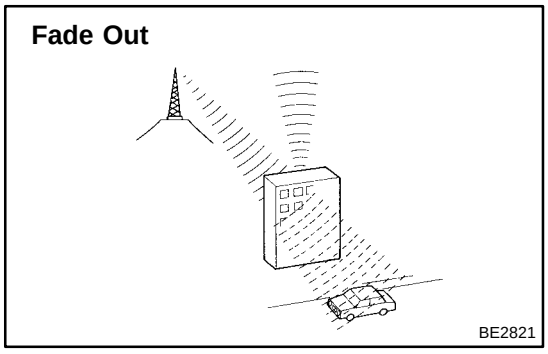

(c) Fade Out
Because of the frequency higher than that of AM, FM radio wave tends to be reflected against obstructions such as tall buildings or mountains. For this reason, FM signals often seems to gradually disappear or fade away as the vehicle goes behind those obstructions. This phenomenon is called ”fade out”.

4. NOISE PROBLEMS

(a) It is very important for noise troubleshooting to understand a customer’s claim clearly. Use the following table to diagnose the phenomenon.

Radio wave	Condition in which noise occurs	Probable cause
AM	Noise occurs at a specific place.	Strong possibility of foreign noise.
	Noise occurs when listening to faint broadcasting.	The same program may be broadcasted from some local stations. If the program is the same, one of those may be tuned in.
FM	Noise occurs only at night.	Strong possibility of beat from a distant broadcasting.
	Noise occurs at a specific place during driving.	Strong possibility of multipath noise and fading noise caused by changes of FM frequency.

HINT:
If the condition where the noise occurs does not meet any of the above, find out the cause based on ”Reception Problems”. Refer to the description about Multipath and Fading mentioned previously.

5. COMPACT DISC PLAYER

(a) Compact Disc (hereafter called ”CD”) Players use a laser beam pick–up to read the digital signals recorded on the CD and reproduce analog signals of the music, etc. There are 4.7 in. (12 cm) and 3.2 in. (8 cm) discs available for the CD player.

HINT:
Never attempt to disassemble or oil any part of the player unit. Do not insert any object other than a disc into the magazine.

NOTICE:
CD players use an invisible laser beam which could cause hazardous radiation exposure. Be sure to operate the player correctly as instructed.

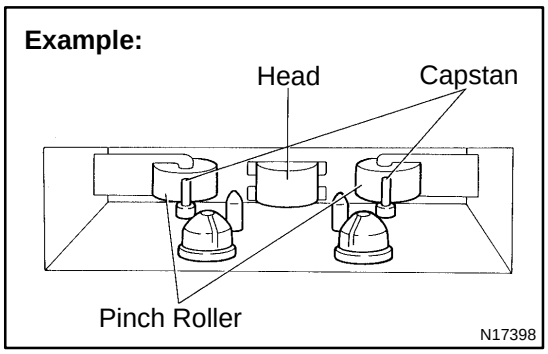

6. MAINTENANCE

Tape Player/Head Cleaning:

(a) Raise the cassette door with your finger.
Using a pencil or similar object, push in the guide.

(b) Using a cleaning pen or cotton applicator soaked in cleaner, clean the head surface, pinch rollers and capstans.

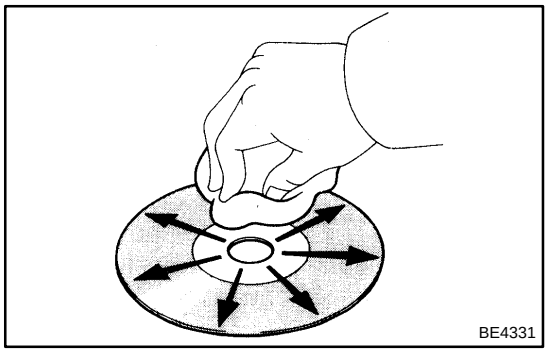

7. MAINTENANCE

CD Player/Disc Cleaning:

If the disc gets dirty, clean the disc by wiping the surface from the center to outside in the radial directions with a soft cloth.

NOTICE:

Do not use a conventional record cleaner or anti–static preservative.

8. COMMUNICATION SYSTEM

(a) Components in the audio system communicate each other though AVC–LAN.

(b) The master component of AVC–LAN is the radio receiver assy with a resistance (60 – 80 Ω), which is necessary for communication.

(c) When short circuit or circuit breakdown occurs in the AVC–LAN circuit, the audio system does not operate normally due to the communication cutoff.

9. DIAGNOSIS FUNCTION

(a) The audio system has diagnosis function (The diagnosis result is displayed on the LCD of the radio receiver assy).

(b) The component code (physical address), or three–digit number (in hexadecimal) is set for each component comprising AVC–LAN.

(c) The logical address, or two–digit number (in hexadecimal) is set for each function and component unit in each component.

05601–02

DIAGNOSTIC TROUBLE CODE CHART

Terms	Meaning
Physical address	Three–digit code (shown in hexadecimal) which is given to each component comprising the AVC–LAN. Corresponding to the function, individual symbols are specified.
Logical address	Two–digit code (shown in hexadecimal) which is given to each function comprising the inner system of the AVC–LAN.

1. RADIO RECEIVER ASSY (Physical address: 190)

HINT:

- *1: Even if no failure is detected, it may be stored depending on the battery condition or voltage for starting an engine.
- *2: It is stored when 180 sec. has passed after the power supply connector is pulled out after engine start.
- *3: It may be stored when the engine key is turned 1 min. after engine start.
- *4: It may be stored when the engine key is turned again after engine start.
- *5: When 210 sec. has passed after pulling out the power supply connector of the master component with the ignition switch in ACC or ON, this code is stored.

(a) Logical address: 01 (Communication control)

DTC	Diagnosis item	Description	Action to be taken
22	RAM Error	Abnormal condition of RAM is detected.	Replace radio receiver assy.
D6 *1	Absence of Master	Component in which this code is recorded had been disconnected from system or master component with ignition in ACC or ON.	• Check harness for power supply system of radio receiver assy. • Check harness for communication system of radio receiver assy.
D7 *5	Connection check Error	Component in which this code is recorded had been disconnected from system or master component ignition with in ACC or ON.	• Check harness for power supply of radio receiver assy. • Check harness for communication system of radio receiver assy.
D8 *2	No Response to Connection Check	Component shown by sub code is or had been disconnected from system after engine start.	• Check harness for power supply system of component shown by sub code. • Check harness for communication system of component shown by sub code.
D9 *1	Last Mode Error	Audio or visual component operated before engine stop is or had been disconnected with ignition switch in ACC or ON.	• Check harness for power supply system of component shown by sub code. • Check harness for communication system of component shown by sub code.
DA	No Response to ON/OFF Instruction	No response is identified when changing mode (audio and visual mode change). Detected when sound and picture does not change by button operation.	• Check harness for power supply system of component shown by sub code. • Check harness for communication system of component shown by sub code. • If error occurs again, replace component shown by sub code.
DB *1	Mode Status Error	Dual alarm is detected.	• Check harness for power supply of component shown by sub code. • Check harness for communication system of component shown by sub code.
DC *3	Transmission Error	Transmission to component shown by auxiliary code has been failed. (Detecting this DTC does not necessarily mean actual failure.)	If same sub code is recorded in other component, check harness for power supply and communication system of all components shown by code. (If not, delete DTC and recheck.)

DD *4	Master Reset (Momentary Interruption)	After engine is started, master component had been disconnected from system.	• Check harness for power supply system of multi–display. • Check harness for communication system of radio receiver assy. • If this error occurs frequently, replace radio receiver assy.
DE *4	Slave Reset (Momentary Interruption)	After engine is started, component shown by sub code had been disconnected from system.	• Check harness for power supply of component shown by sub code. • Check harness for communication system of component shown by sub code.
E0 *1	Registration Completion Instruction Error	”Registration Completion Instruction” command from master cannot be received.	Since this DTC is provided for engineering purpose, it may be detected when no actual failure exists.
E2	ON/OFF Instruction Parameter Error	Error occures in ON/OFF controlling command from master component.	Replace radio receiver assy
E3 *1	Registration Request Transmission	Registration Request command is output from component shown by sub code. Receiving Connection Check Instruction, Registration Request command is output from sub–master component.	Since this DTC is provided for engineering purpose, it may be detected when no actual failure exists.

(b) Logical address: 61 (Cassette switch)

DTC	Diagnosis item	Description	Action to be taken
40	Mechanical Error of Media	Malfunction due to mechanical failure is identified. Or cassette tape is cut or entangled.	• Inspect cassette tape. • Replace radio receiver assy.
41	EJECT Error	Malfunction due to mechanical failure.	Replace radio receiver assy.
42	Tape caught in the radio receiver assy	Hub lock etc.	Inspect cassette tape.

(c) Logical address: 62 (CD player)

DTC	Diagnosis item	Description	Action to be taken
42	No Disc Readout	Disc cannot be read.	• Inspect CD. • Replace radio receiver assy.
44	CD player Error	Error is detected in CD player.	Replace radio receiver assy.
45	EJECT Error	Magazine cannot be ejected.	Replace radio receiver assy.
46	Scratched/Reversed Disc	Scratches or dirt is found on CD surface or CD is set upside down.	Inspect CD.

05602–02

LOCATION

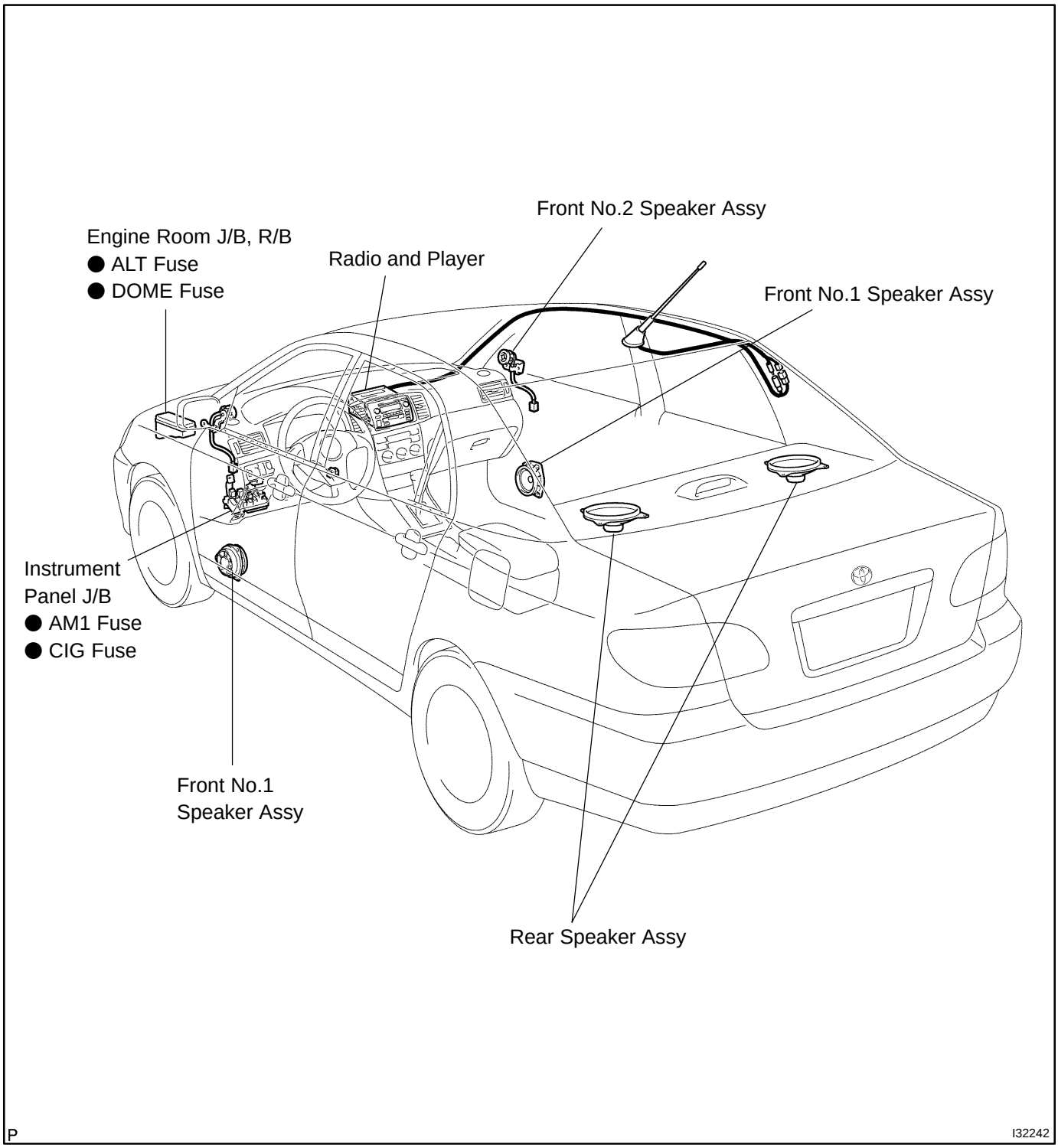

NOISE OCCURS

INSPECTION PROCEDURE

1 CHECK OF SPEAKER INSTALLATION

(a) Check speaker installation condition.
  (1) Check that each speaker is securely installed.
  Standard: malfunction disappear.

HINT:

The radio is equipped with noise prevention system that does not work against the regular use of the radio, thereby excessively large noise cannot occur in the radio. If large noise occurs, check whether or not the earth on the antenna installation part and the proper noise–prevention equipment are all installed, and whether or not the improper wiring is held.

Condition in which noise occurs	Noise type
Depressing the acceleration pedal increases noise, and stopping the engine erases the noise immediately.	Alternator noise
Noise occurs during the A/C or the heater operation.	Blower motor noise
Rapid acceleration during the drive on the unpaved road or after the IG switch is turned ON makes noise.	Fuel pump noise
Pressing and then releasing the horn switch, and keeping pressing the horn switch makes noise.	Horn noise
Stopping the engine erases the small noise that has been heard.	Ignition noise
Noise occurs in turn with the blink of the turn signal flash.	Flasher noise
Noise occurs during the window washer operation.	Washer noise
Noise occurs during the engine running, and it continues to occur after the engine is stopped.	Water temperature sensor noise
Noise occurs during the wiper operation.	Wiper noise
Noise occurs when the brake pedal is depressed.	Stop light switch noise
Others.	Static electricity on the vehicle

HINT:

- Identify the condition under which the noise occurs, and check the noise filter on the related part.
- Make sure first that there is no noise from outside. Failing to do so makes the noise occurrence source detection impossible and leads to misunderstanding.
- The noise should be removed in descending order of loudness.

NG → **INSTALL IT PROPERLY**

OK

IDENTIFICATION OF NOISE SOURCE

NO SOUND IS HEARD FROM SPEAKER IN ALL MODES

WIRING DIAGRAM

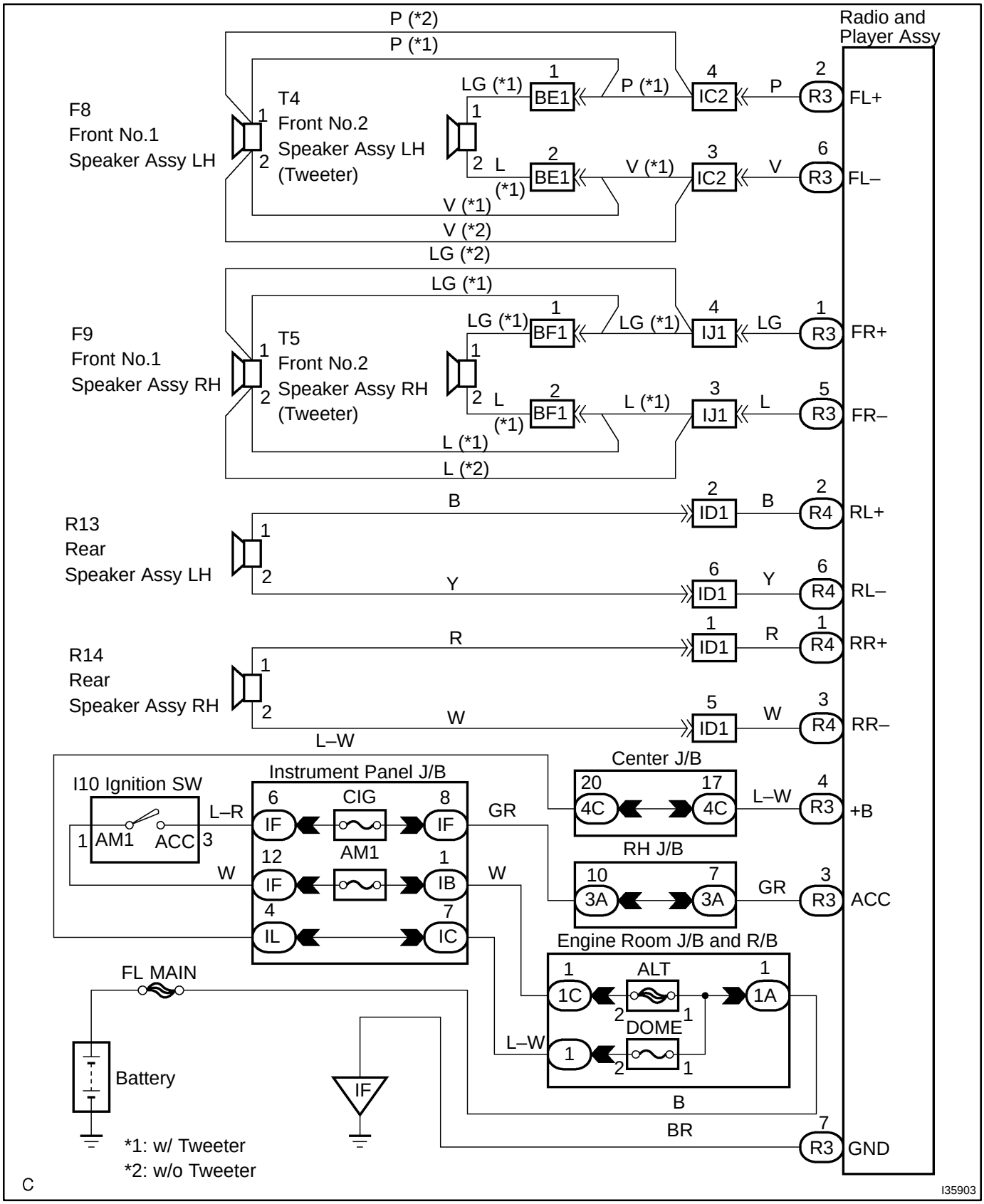

INSPECTION PROCEDURE

1	CHECK LCD (LIQUID CRYSTAL DISPLAY) FOR LIGHTING

(a) LCD Illumination Check
  (1) Turn the ignition switch ACC.
  (2) Turn the radio receiver assembly ON.
  Standard: LCD illumination of the radio receiver assembly light.

NG → **Go to step 7**

OK

2	CONTROL FADER AND ADJUST SOUND BALANCE

(a) Fader and Balance Adjustment
  (1) Operate the radio receiver assembly to adjust the fader and the balance to identify the speaker that does not sound.

(A)	(B)
A specific speaker does not sound.	All speakers do not sound.

B → **CHECK AND REPLACE RADIO RECEIVER ASSY**

A

3	INSPECT FRONT NO.1 SPEAKER ASSY

(a) Preparation for Check
  (1) Disconnect the connector of the speaker.
(b) Resistance Check
  (1) Check the resistance between the terminals of the speaker.

NOTICE:
The speaker should not be removed for checking.
  Standard value: 4 Ω

NG → **REPLACE FRONT NO.1 SPEAKER ASSY**

OK

4	INSPECT FRONT NO.2 SPEAKER ASSY

(a) Check that malfunction disappear when a known good speaker is installed.
  Standard: malfunction disappear.

HINT:
Connect the all connectors of speakers.

NG → **REPLACE FRONT NO.2 SPEAKER ASSY**

OK

5	INSPECT REAR SPEAKER ASSY

(a) Preparation for Check
  (1) Disconnect the connector of the speaker.
(b) Resistance Check
  (1) Check the resistance between the terminals of the speaker.

NOTICE:
The speaker should not be removed for checking.

Standard value: 6 Ω

NG → **REPLACE REAR SPEAKER ASSY**

OK

6	CHECK HARNESS AND CONNECTOR(BETWEEN RADIO RECEIVER ASSY AND SPEAKER)

NG → **REPAIR OR REPLACE HARNESS OR CONNECTOR**

OK

CHECK AND REPLACE RADIO RECEIVER ASSY

7	INSPECT RADIO RECEIVER ASSY(+B, ACC, GND)

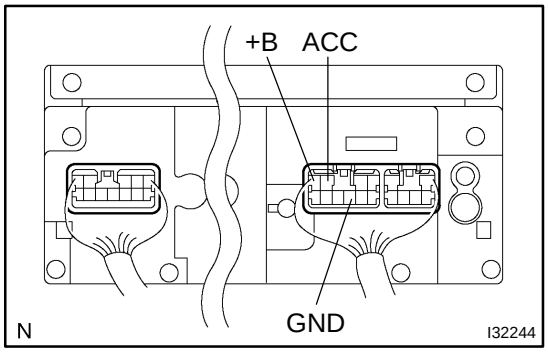

(a) Check that the continuity between terminals at each condition, as shown in the chart.

Standard:

Tester connection	Condition	Specified condition
GND – Body ground	Constant	Continuity

(b) Check that the voltage between terminals at each condition, as shown in the chart.

Standard:

Tester connection	Condition	Specified condition
+B – GND	Constant	10 – 14 V
ACC – GND	Ignition switch ACC or ON	10 – 14 V

OK → **CHECK AND REPLACE RADIO RECEIVER ASSY**

NG

REPAIR OR REPLACE HARNESS OR CONNECTOR

ALTHOUGH SYSTEM IS POWERED,CD CANNOT BE PLAYED

WIRING DIAGRAM

See Page 05–610

INSPECTION PROCEDURE

1	CHECK IF A PROPER CD IS INSERTED

(a) Check that a proper CD is inserted.
  (1) Make sure that the CD is a normal audio CD, and that there is no deformation, flaw, stain, burr and other defects on the CD.
  Standard: Normal audio CD.

Reference:
- Translucent or different–shaped CD cannot be played.
- CD–ROM for personal computers (with music recorded in) and recorded CD–R may not be played.
- Playing an 3.2 in. (8–cm) CD does not require an adapter.

NG → **CD FAULTY**

OK

2	CHECK THAT A PROPER CD IS INSERTED

(a) Check that a proper CD is inserted.
  (1) Check whether or not the CD is inserted upside down.
  Standard: Not upside down.

NG → **SET DISC CORRECTLY**

OK

3	DISC CLEANING

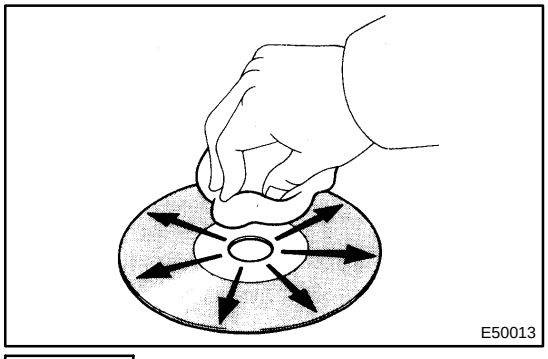
E50013

NG

(a) Disk cleaning
  (1) If the disk gets dirty, clean the disk by wiping the surface from the center to outside in the radial directions with a soft cloth.

NOTICE:
Do not use a conventional record cleaner or anti–static preservative.

OK → **DISC DIRTY**

4	REPLACE CD WITH ANOTHER AND RECHECK

(a) Replace the CD with another and recheck.
(1) Replace the faulty CD with the normal one to see if the same trouble occurs again.
Standard: malfunction disappear.

OK	CD FAULTY

NG

5	CHECK IF RADIO AUTO–SEARCH FUNCTIONS PROPERLY

(a) Check if the radio auto–search function properly.
(1) Perform the auto–research of the radio and check that the operation is normal.
Standard: malfunction disappear.

NG	Go to step 7

OK

6	DID THE TEMPERATURE IN THE CABIN CHANGE RAPIDLY?

(a) Did the temperature in the cabin change rapidly?
(1) Check whether or not the rapid temperature change occurred in the cabin.
Standard: The rapid temperature change occurred.

Reference:
The rapid temperature change creates condensation inside the CD player, which may disable playing CD.

OK	CONDENSATION DUE TO TEMPERATURE CHANGE(LEAVE IT AS IT IS FOR A WHILE BEFORE USING)

NG

CHECK AND REPLACE RADIO RECEIVER ASSY

7	INSPECT RADIO RECEIVER ASSY(+B, ACC, GND)

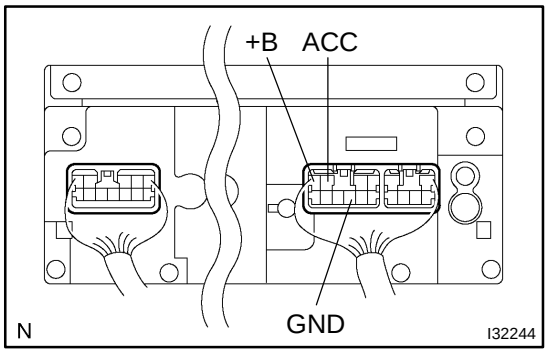

(a) Check that the continuity between terminals at each condition, as shown in the chart.

Standard:

Tester connection	Condition	Specified condition
GND – Body ground	Constant	Continuity

(b) Check that the voltage between terminals at each condition, as shown in the chart.

Standard:

Tester connection	Condition	Specified condition
+B – GND	Constant	10 – 14 V
ACC – GND	Ignition switch ACC or ON	10 – 14 V

OK → **CHECK AND REPLACE RADIO RECEIVER ASSY**

NG

REPAIR OR REPLACE HARNESS OR CONNECTOR

PRESSING POWER SWITCH DOES NOT START SYSTEM

WIRING DIAGRAM

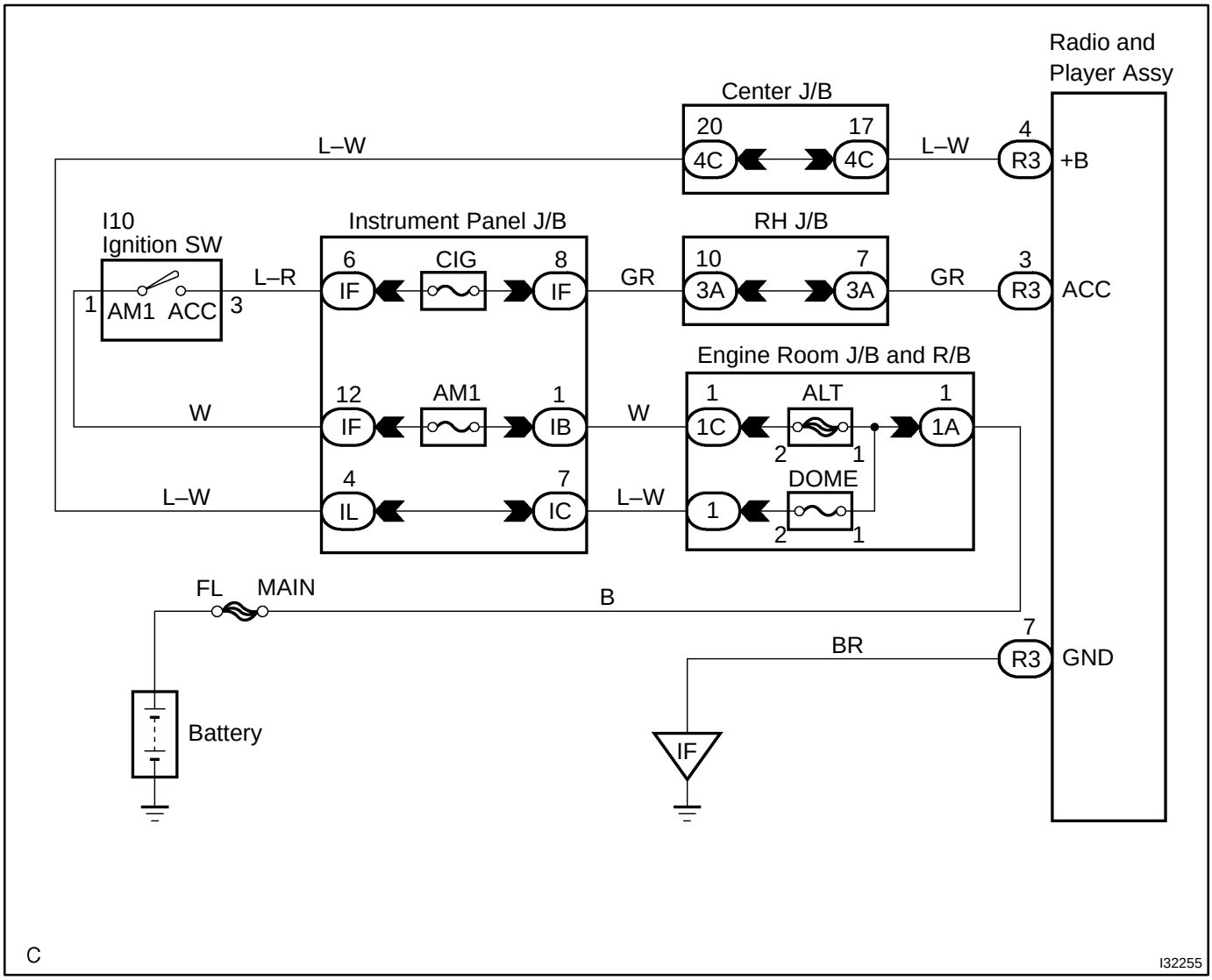

INSPECTION PROCEDURE

1	INSPECT RADIO RECEIVER ASSY(+B, ACC, GND)

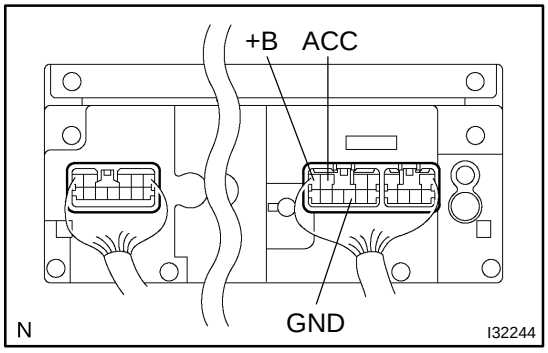

(a) Check that the continuity between terminals at each condition, as shown in the chart.

Standard:

Tester connection	Condition	Specified condition
GND – Body ground	Constant	Continuity

(b) Check that the voltage between terminals at each condition, as shown in the chart.

Standard:

Tester connection	Condition	Specified condition
+B – GND	Constant	10 – 14 V
ACC – GND	Ignition switch ACC or ON	10 – 14 V

NG → **REPAIR OR REPLACE HARNESS OR CONNECTOR**

OK

CHECK AND REPLACE RADIO RECEIVER ASSY

05600–05

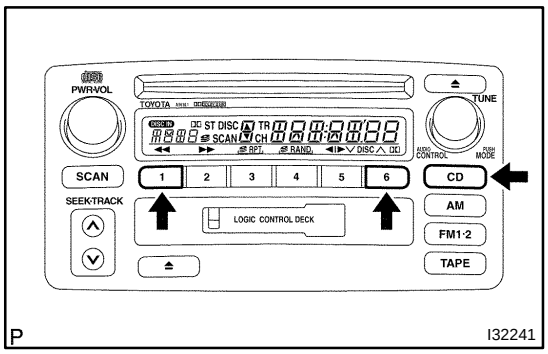

PRE–CHECK

1. DIAGNOSIS CHECK

(a) Starting Diagnosis Mode (Service Check Mode)

(1) Turn off the audio system and turn the IG switch to ACC. While pressing the preset switches ”1” and ”6” at the same time, press ”CD” 3 times.

(2) Reference:

- Beep sound is given 3 times and the system enters the service check mode.
- It may take about 40 sec. to complete the check.
- In the service check mode, the system check and the diagnosis memory check are performed, and the check results are displayed in ascending order of the device codes. (physical address)

Terms	Meaning
Component code (Physical address)	Three–digit code (In hexadecimal) given to each device comprising AVC–LAN. Corresponding to its function, individual symbol is provided.
Logical address	Two–digit code (In hexadecimal) given to each function and device unit in each device comprising AVC–LAN.

Code No. (physical address) List

Code No. (physical address)	Equipment name
190	Radio receiver assy (Audio head unit)

(b) Finishing Diagnosis Mode

(1) Press ”CD” for 2 sec. or more, or turn the IG switch OFF.

(c) Service Check Mode Result Display (for checking the current and the past system conditions)

(1) Press the ”TUNE” switch to see the check result of each device.

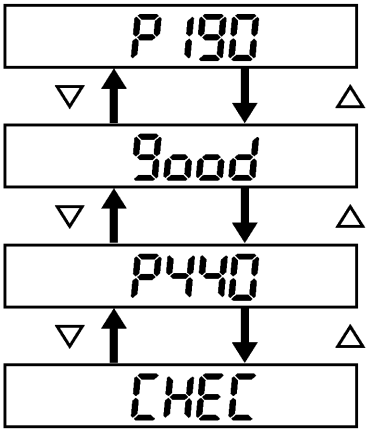

P——physical address
190——device code

good——”The component is normal”.

P——physical address
440——component code

CHEC——”Check needed”.

The illustration shows the case that the system has 2 devices with codes 190 and 440, and the device (code 440) has a trouble.
The check result is displayed in ascending order of device code. The device code is displayed first, then the check result.

N

I32773

(2) Check Result Display

Display	Original Language	Meaning	Action to be taken
good	Good (normal)	No DTC is detected in both ”System Check Mode” and ”Diagnosis Memory Mode”.	–
nCon	No connection	The system recognized the component when it was registered, but the component gives no response to the ”Diagnosis Mode ON Request”.	Check the power source circuit and the communication circuit of the device indicated by the device code (physical address).
ECHn	Exchange	One or more DTC for ”Exchange” is detected in either ”System Check Mode” or ”Diagnosis Memory Mode”.	Go to the detail information mode to check the trouble area referring to the DTC list.
CHEC	Check	When no DTC is detected for ”Exchange”, one or more DTC for ”Check is detected in either ”System Check Mode” or ”Diagnosis Memory Mode”.	Go to the detail information mode to check the trouble area referring to the DTC list.

Display	Original Language	Meaning	Action to be taken
Old	Old version	Old DTC application is identified and DTC is detected in either ”System Check Mode” or ”Diagnosis Memory Mode”.	–
nrES	No response	The device gives no response to any one of ”System Check Mode ON Request”, ”System Check Result Request” and ”Diagnosis Memory Request”.	Check the power source circuit and the communication circuit of the device indicated by the device code (physical code).

(3) To perform the Service Check again, press the preset switch ”1”.

(d) Detail information Mode (when displaying the troubled device’s DTC)

(1) With ”CHEC” or ”ECHn” being display, press the preset switch ”2” to go to the detail information mode.

(2) Press the ”TUNE” switch to display ”System Check Result (SyS)” and ”Diagnosis Memory Response (COdE)”.

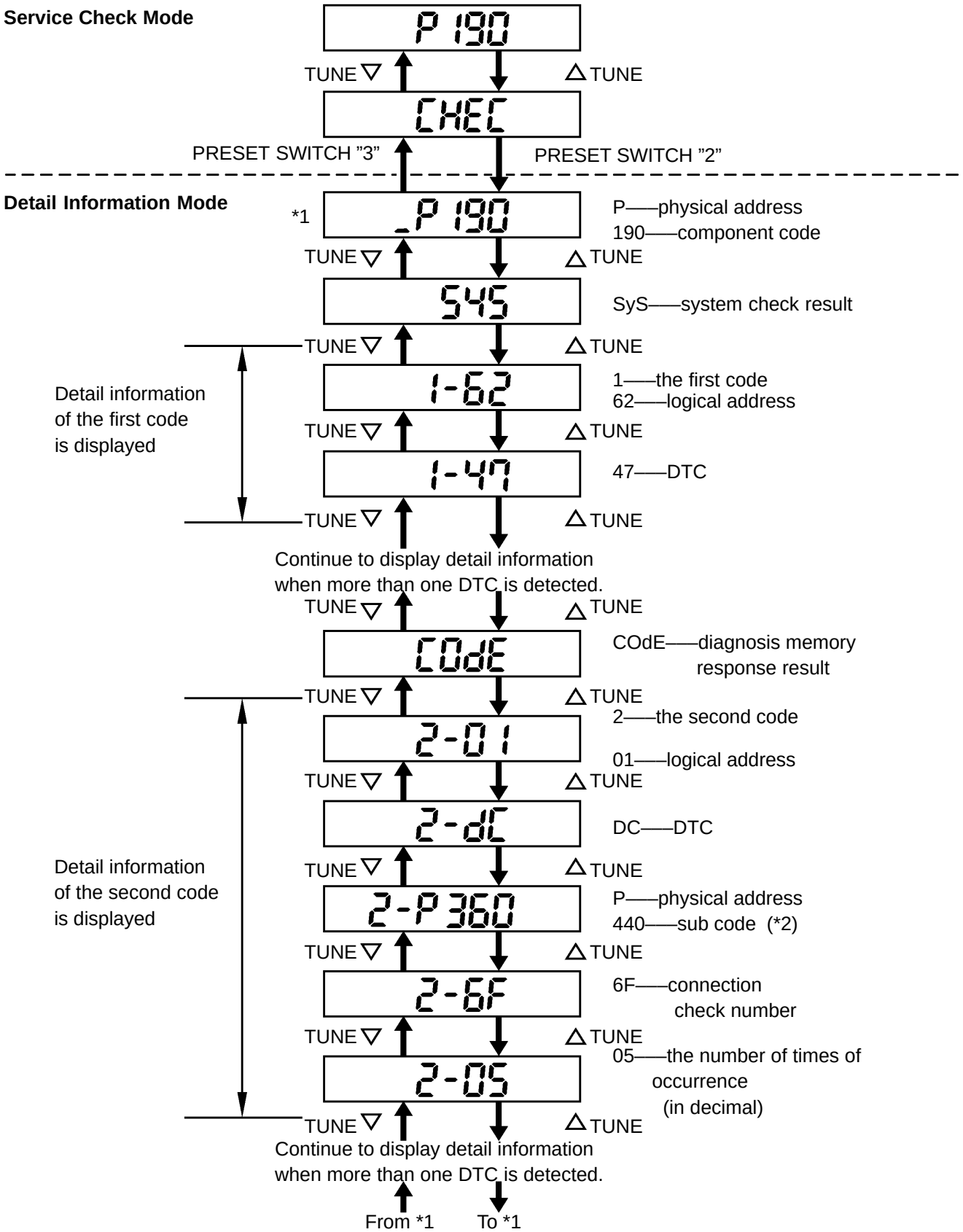

The illustration shows the case that the component with code 190 has DTC ”47” and ”DC” as a result of the system check and the diagnosis memory response.

The detail information mode shows the system check result first, then the diagnosis memory response result.

(*2): As for DTC that does not have any sub code, sub code is not displayed.

N

I32774

(3) Displayed Items in Detail Information Mode

Division Code for DTC display	Meaning	Order of detailed information displayed when the "TUNE UP" switch is pressed. (The order is reversed when the "TUNE DOWN" switch is pressed.)
SyS	System check result is displayed.	Logical address → DTC
COdE	Diagnosis memory check result is displayed.	Logical address→ DTC→ Sub code→ Connection confirmation number→ The number of times of occurrence

(4) Check the trouble area referring to the DTC list. (See page 05–605)

(5) To return to the service check mode, press the preset switch "3".

(e) Clearing Individual DTC Memory (when clearing the memory of DTC detected in the pest individually)

(1) Press the preset switch "5" for 2 sec. or more while the "ECHn" is displayed in the service check mode or during the detail information mode.

HINT:

- Beep sound is given once when the DTC memory is completely cleared.
- When DTC memory is cleared, only the component code (physical address) is displayed for the target component.
- To check DTC, press the preset switch "1" and perform the service check again.

(f) Clearance of all DTC memory (when clearing all the memory of DTC detected in the past)

(1) Start the diagnosis mode after repairing the trouble area.

(2) Press the preset switch "5" for 2 sec. or more. ("CLr" is displayed at this time.)

HINT:

- Beep sound is given once when the DTC memory is completely cleared.
- When DTC memory for all the device is cleared, only the component codes (physical address) are displayed.

(3) Press the preset switch "1" to perform the service check again, and check that no DTC is displayed for all the component codes. (physical address)

2. IDENTIFICATION OF NOISE SOURCE

(a) Identify the condition under which the noise occurs, and check the noise filter on the related part.

Condition in which noise occurs	Noise Source
Depressing the acceleration pedal increases noise, and stopping the engine erases the noise immediately.	Generator
Noise occurs during the A/C or the heater operation.	Blower motor
Rapid acceleration during driving on the unpaved road or after the IG switch is turned ON makes noise.	Fuel pump
Pressing and then releasing the horn switch, and keeping pressing the horn switch makes unusual noise.	Horn
Stopping the engine erases small noise that has been heard.	Ignition
Noise occurs synchronously with the turn signal flash.	Flasher
Noise occurs during the window washer operation.	Washer
Noise occurs during the engine running, and it continues after the engine is stopped.	Engine coolant temperature sensor
Noise occurs during the wiper operation.	Wiper
Noise occurs when the brake pedal is depressed.	Stop light switch
Others.	Static electricity stored on the vehicle

(b) Reference:

- Make sure first that there is no noise from outside. Failing to do so makes the noise source detection difficult and leads to misunderstanding.
- The noise should be removed in descending order of loudness.
- Setting the radio untuned makes noise noticeable, making the recognition of the phenomenon easier.

TURNING ON LIGHT SWITCH DOES NOT LIGHT UP NIGHT TIME ILLUMINATION OF RADIO RECEIVER

WIRING DIAGRAM

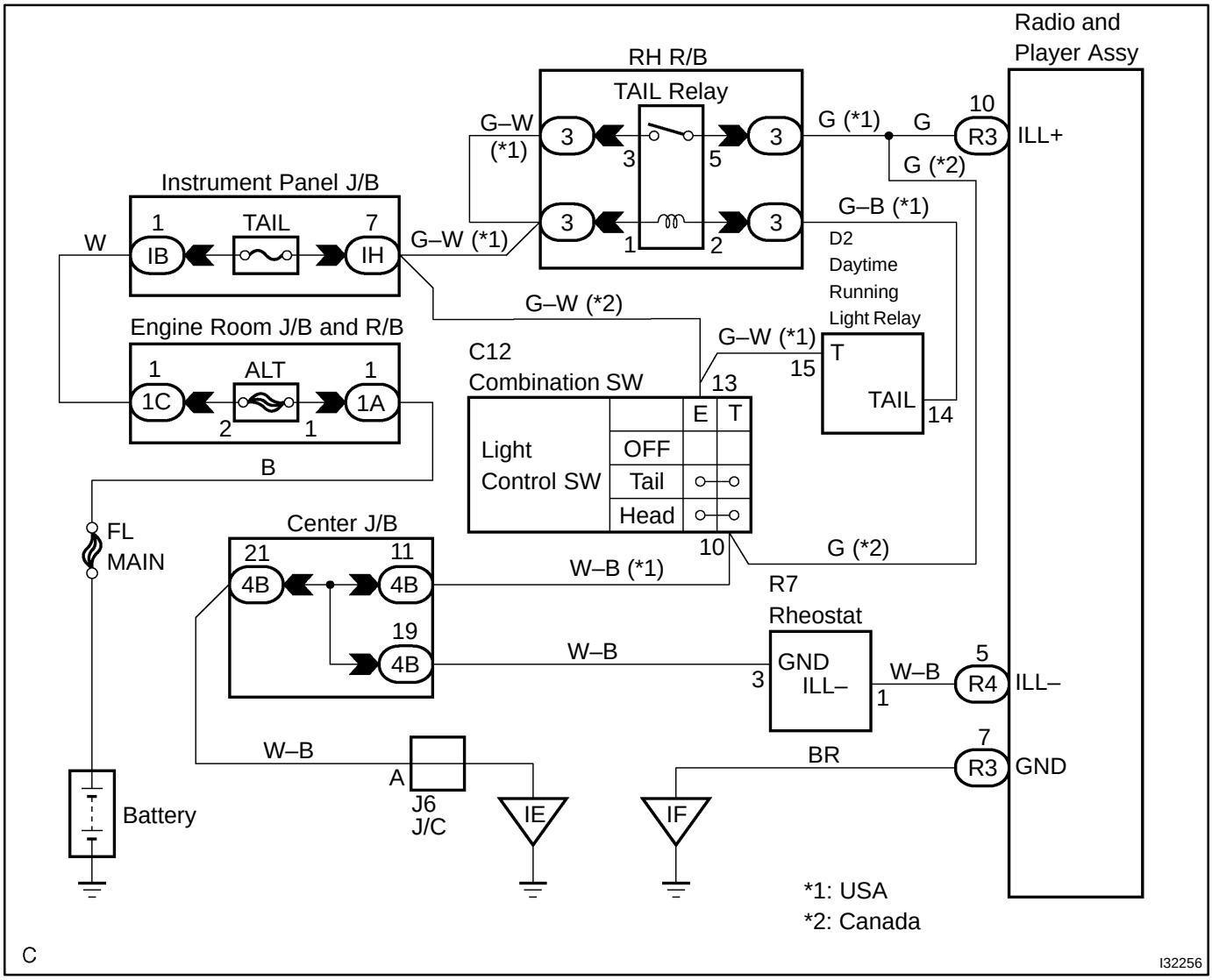

INSPECTION PROCEDURE

1	INSPECT RADIO RECEIVER ASSY(ILL+, ILL–)

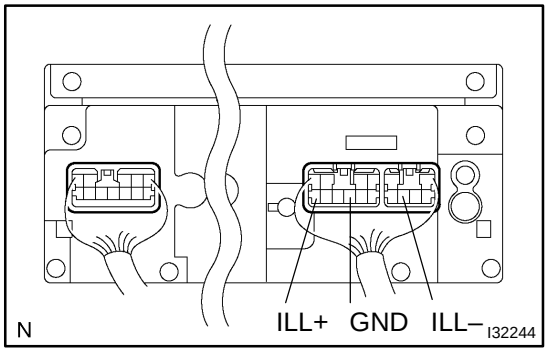

(a) Check that the voltage between terminals at each condition, as shown in the chart.

Standard:

Tester connection	Condition	Specified condition
ILL+ – GND	Light control switch TAIL or HEAD	10 – 14 V
ILL– – GND	Light control switch HI or FLASH	10 – 14 V

OK → **CHECK AND REPLACE RADIO RECEIVER ASSY**

NG

REPAIR OR REPLACE HARNESS OR CONNECTOR

SOUND QUALITY IS BAD ONLY WHEN PLAYING TAPE

INSPECTION PROCEDURE

1	REPLACE CASSETTE TAPE WITH ANOTHER AND RECHECK

(a) Replace the cassette tape with another and recheck.
  (1) Replace the faulty cassette tape with the normal one to see if the same trouble occurs again.
  Standard: malfunction disappear.

OK → **CASSETTE TAPE FAULTY**

NG

2	CHECK FOR ANY FOREIGN OBJECT

(a) Check for foreign object.
  (1) Check that no foreign material and troubles are detected in the radio receiver assembly cassette tape player.

NG → **REMOVE FOREIGN OBJECT**

OK

3	CLEAN HEAD AND CHECK OPERATION

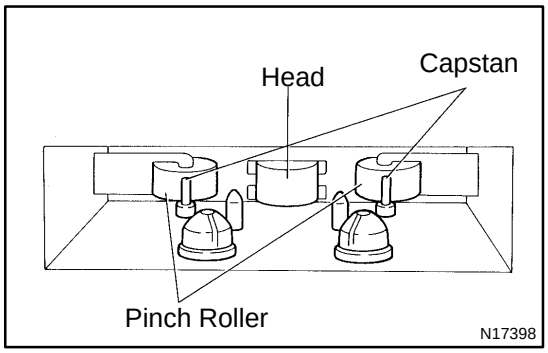

(a) Head cleaning
  (1) Raise the cassette door with your finger. Next, using a pencil or similar object, push in the guide.
  (2) Using a cleaning pen or cotton applicator soaked in cleaner, clean the head surface, pinch rollers and capstans.
  (3) Check that the same trouble occurs again.

OK → **HEAD DIRTY**

NG

CHECK AND REPLACE RADIO RECEIVER ASSY

05604–04

PROBLEM SYMPTOMS TABLE

If a normal code is displayed during the DTC check but the problem still occurs, check the circuits for each problem symptom in the order given in the table below and proceed to the relevant troubleshooting page.

Symptom	Suspect Area	See page
Pressing power switch does not start system.	3. Radio receiver assy power source circuit 4. Radio receiver assy	05–610
Turning on light switch does not light up night time illumination of radio receiver.	1. Radio receiver assy ILL terminal circuit 2. Radio receiver assy	05–612
No sound is heard from speaker in all modes.	1. Speaker circuit 2. Radio receiver assy power source circuit 3. Radio receiver assy	05–614
Sound quality is bad in all modes. (Volume is too low)	1. Speaker circuit 2. Radio receiver assy power source circuit 3. Radio receiver assy	05–617
Radio broadcast cannot be received. (Bad reception)	1. Antenna circuit 2. Radio receiver assy	05–619
Cassette tape cannot be inserted or played.	1. Cassette tape 2. Radio receiver assy power source circuit 3. Radio receiver assy	05–621
Cassette tape cannot be ejected.	1. Cassette tape 2. Radio receiver assy power source circuit 3. Radio receiver assy	05–623
Sound quality is bad only when playing tape.	1. Cassette tape 2. Radio receiver assy	05–617
Tape is tangled due to incorrect tape speed or auto–reverse malfunction.	1. Cassette tape 2. Radio receiver assy	05–626
CD cannot be inserted or is ejected right after insertion.	1. CD 2. Radio receiver assy power source circuit 3. Radio receiver assy	05–627
Although system is powered, CD cannot be played.	1. CD 2. Radio receiver assy power source circuit 3. Radio receiver assy	05–629
CD cannot be taken out.	1. CD 2. Radio receiver assy power source circuit 3. Radio receiver assy	05–632
Sound quality is bad only when CD is played.(Volume is too low)	1. CD	05–634
CD sound skips.	1. CD 2. Radio installation	05–635
Noise occurs.	–	05–637

TAPE IS TANGLED DUE TO INCORRECT TAPE SPEED OR AUTO–REVERSE MALFUNCTION

INSPECTION PROCEDURE

1	CHECK FOR ANY FOREIGN OBJECT

(a) Check for any foreign object.
  (1) Check that no foreign material and troubles are detected in the radio receiver assembly cassette tape player.

Standard: No foreign material and trouble detected.

NG → **REMOVE FOREIGN OBJECT**

OK

2	REPLACE CASSETTE TAPE WITH ANOTHER AND RECHECK(BELOW 90 MIN.)

(a) Replace the cassette tape with another and recheck.
  (1) Replace the faulty cassette tape with the normal one (90 min. or less) to see if the same trouble occurs again.

Standard: malfunction disappear.

OK → **CASSETTE TAPE FAULTY**

NG

3	CLEAN HEAD AND CHECK OPERATION

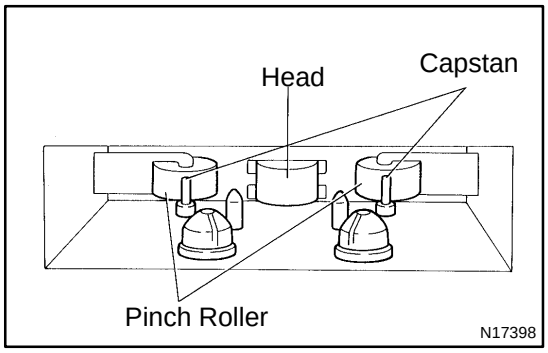

(a) Head cleaning
  (1) Raise the cassette door with your finger. Next, using a pencil or similar object, push in the guide.
  (2) Using a cleaning pen or cotton applicator soaked in cleaner, clean the head surface, pinch rollers and capstans.
  (3) Check that the same trouble occurs again.

OK → **HEAD DIRTY**

NG

CHECK AND REPLACE RADIO RECEIVER ASSY

057P0–02

TERMINALS OF ECU

1. RADIO RECEIVER ASSY

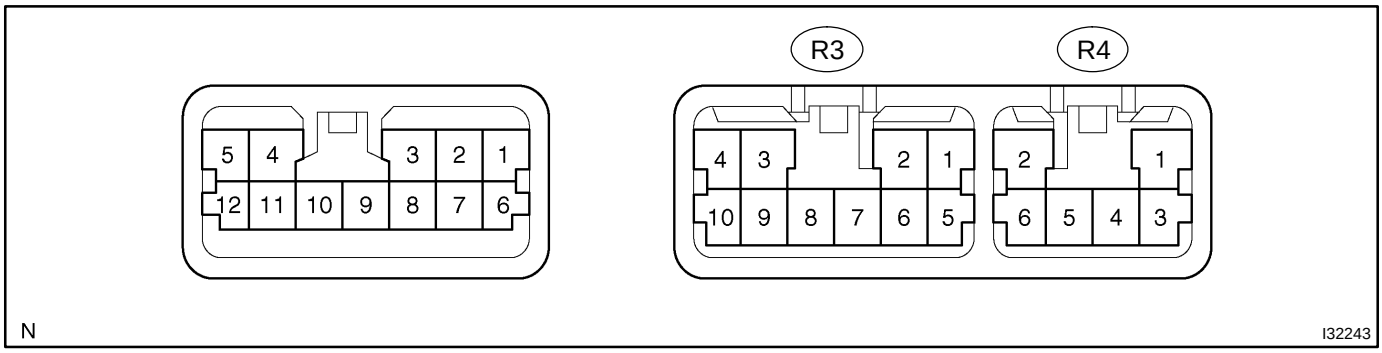

Symbols (Terminals No.)	Wirin Color	Condition	STD Voltage (V)
R3–1 ⇔ R3–7 (FR+ ⇔ GND)	LG ⇔ BR	Audio system is sounding	A waveform synchronized with sounds is output
R3–2 ⇔ R3–7 (FL+ ⇔ GND)	P ⇔ BR	Audio system is sounding	A waveform synchronized with sounds is output
R3–3 ⇔ R3–7 (ACC ⇔ GND)	GR ⇔ BR	Ignition switch OFF	Below 1 V
		Ignition switch ON	10 – 14 V
R3–4 ⇔ R3–7 (+B ⇔ GND)	L–W ⇔ BR	Constant	10 – 14 V
R3–5 ⇔ R3–7 (FR– ⇔ GND)	L ⇔ BR	Audio system is sounding	A waveform synchronized with sounds is output
R3–6 ⇔ R3–7 (FL– ⇔ GND)	V ⇔ BR	Audio system is sounding	A waveform synchronized with sounds is output
R3–7 ⇔ Body ground (GND ⇔ Body ground)	BR ⇔ Body ground	Constant	Below 1 V
R3–8 ⇔ – (ANT+ ⇔ –)	B ⇔ –	See ”Service check mode”	–
R3–10 ⇔ R3–7 (ILL+ ⇔ GND)	G ⇔ BR	Light control switch TAIL or HEAD	10 – 14 V
R4–1 ⇔ R3–7 (RR+ ⇔ GND)	R ⇔ BR	Audio system is sounding	A waveform synchronized with sounds is output
R4–2 ⇔ R3–7 (RL+ ⇔ GND)	B ⇔ BR	Audio system is sounding	A waveform synchronized with sounds is output
R4–3 ⇔ R3–7 (RR– ⇔ GND)	W ⇔ BR	Audio system is sounding	A waveform synchronized with sounds is output
R4–5 ⇔ R3–7 (ILL– ⇔ GND)	W–B ⇔ BR	Light control switch HI or FLASH	10 – 14 V
R4–6 ⇔ R3–7 (RL– ⇔ GND)	Y ⇔ BR	Audio system is sounding	A waveform synchronized with sounds is output

055ZY–05

HOW TO PROCEED WITH TROUBLESHOOTING

1	VEHICLE BROUGHT TO WORKSHOP

2	CUSTOMER PROBLEM ANALYSIS (SEE PAGE 05–598)

3	CHECK AND CLEAR DTC (SEE PAGE 05–599)

4	PROBLEM SYMPTOM CONFIRMATION

→ SYMPTOM OCCURS (GO TO STEP 6)

SYMPTOM DOES NOT OCCUR (GO TO STEP 5)

5	SYMPTOM SIMULATION (SEE PAGE 01–20)

6	DTC CHECK (SEE PAGE 05–599)

→ MALFUNCTION CODE (GO TO STEP 7)

→ NORMAL CODE (GO TO STEP 8)

7	DTC CHART (SEE PAGE 05–605)

→ GO TO STEP 9

8	PROBLEM SYMPTOMS TABLE (SEE PAGE 05–609)

9	CIRCUIT INSPECTION (SEE PAGE 05–610 – 05–637)

10	CONFIRMATION TEST

END

SOUND QUALITY IS BAD IN ALL MODES (VOLUME IS TOO LOW)

WIRING DIAGRAM

See page 05–614

INSPECTION PROCEDURE

1	ADJUST SOUND QUALITY

(a) Adjust the sound quality.
  (1) Operate the radio receiver assy to adjust the sound quality.
  Standard: malfunction disappear.

OK	BAD SOUND QUALITY

NG

2	COMPARE IT WITH ANOTHER CAR OF SAME MODEL

(a) Compare it with another vehicle of the same model.
  (1) Compare with the vehicle of the same type which does not have a trouble to see if there is any difference in the condition of trouble occurrence.
  Standard: No difference found.

OK	SETTING

NG

3	CHECK HARNESS AND CONNECTOR(BETWEEN RADIO RECEIVER ASSY AND SPEAKER)

NG	REPAIR OR REPLACE HARNESS OR CONNECTOR

OK

4	INSPECT FRONT NO.1 SPEAKER ASSY

(a) Preparation for Check
  (1) Disconnect the connector of the speaker.
(b) Resistance Check
  (1) Check the resistance between the terminals of the speaker.

NOTICE:
The speaker should not be removed for checking.
  Standard value: 4 Ω

NG	REPLACE FRONT NO.1 SPEAKER ASSY

OK

5	INSPECT FRONT NO.2 SPEAKER ASSY

(a) Check that malfunction disappear when a known good speaker is installed.
Standard: malfunction disappear.

HINT:
Connect the all connectors of speakers.

NG → **REPLACE FRONT NO.2 SPEAKER ASSY**

OK

6	INSPECT REAR SPEAKER ASSY

(a) Preparation for Check
(1) Disconnect the connector of the speaker.
(b) Resistance Check
(1) Check the resistance between the terminals of the speaker.

NOTICE:
The speaker should not be removed for checking.
Standard value: 6 Ω

NG → **REPLACE REAR SPEAKER ASSY**

OK

7	INSPECT RADIO RECEIVER ASSY(+B, ACC, GND)

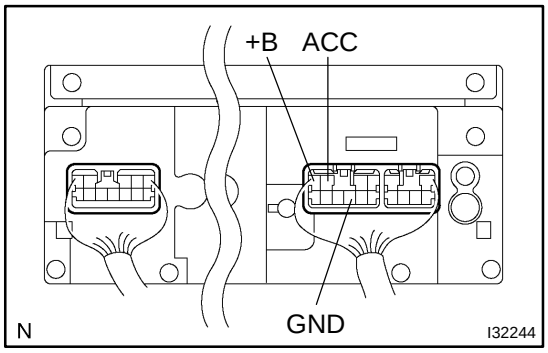

(a) Check that the continuity between terminals at each condition, as shown in the chart.

Standard:

Tester connection	Condition	Specified condition
GND – Body ground	Constant	Continuity

(b) Check that the voltage between terminals at each condition, as shown in the chart.

Standard:

Tester connection	Condition	Specified condition
+B – GND	Constant	10 – 14 V
ACC – GND	Ignition switch ACC or ON	10 – 14 V

OK → **CHECK AND REPLACE RADIO RECEIVER ASSY**

NG

REPAIR OR REPLACE HARNESS OR CONNECTOR

DTC P0724 BRAKE SWITCH ”B” CIRCUIT HIGH

CIRCUIT DESCRIPTION

The purpose of this circuit is to prevent the engine from stalling while driving in lock–up condition, when brakes are suddenly applied.
When the brake pedal is depressed, this switch sends a signals to the ECM. Then the ECM cancels the operation of the lock–up clutch while braking is in progress.

DTC No.	DTC Detecting Condition	Trouble Area
P0724	The stop light switch does not turn off even once the vehicle is driven (2–trip detection logic).	• Short in stop light switch signal circuit • Stop light switch • ECM

MONITOR DESCRIPTION

The circuit prevents the engine from stopping when the vehicle is stopped by sudden braking when the torque converter clutch is in the ”lock–up” mode. The ECM receives the signal from the stop light switch at the time brake pedal is depressed. Then, the ECM sends the signal to the lock–up solenoid valve not to be in lock–up condition. When the stop light switch remains ON during ”stop and go” driving, the ECM interprets this as a fault in the stop light switch and the MIL comes on. The vehicle must stop and go (3 km/h (2 mph) to 30 km/h (19 mph)) ten times for two driving cycles in order to detect malfunction.

MONITOR STRATEGY

Related DTCs	P0724	Stop light switch/Range check
		Stop light switch/Rationality
Required sensors/Components	Stop light switch	
Frequency of operation	Continuous	
Duration	Go and stop 10 times or more	
MIL operation	2 driving cycles	
Sequence of operation	None	

TYPICAL ENABLING CONDITION

Item	Specification	
	Minimum	Maximum
The monitor will run whenever the following DTCs are not present.	See page 05–369	
Number of ”Go” and ”Stop” defined as follows	10 times	
”Go”	30 km/h (19 mph) or more	–
”Stop”	–	Less than 3 km/h (2 mph)

TYPICAL MALFUNCTION THRESHOLDS

Detection criteria	Threshold
Switch status	ON stuck

WIRING DIAGRAM

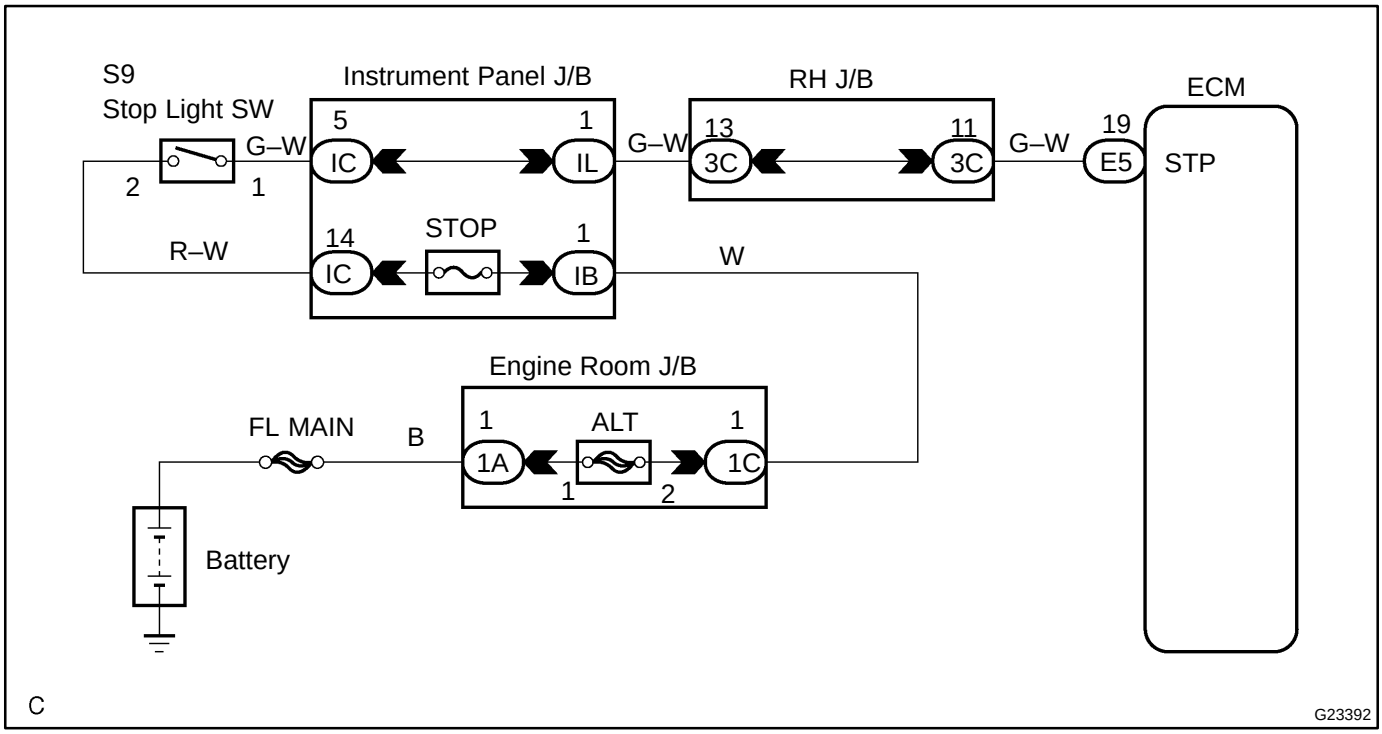

INSPECTION PROCEDURE

1	INSPECT STOP LAMP SWITCH ASSY (See page 65–7)

NG → REPLACE STOP LAMP SWITCH ASSY

OK

2	CHECK HARNESS AND CONNECTOR(STOP LAMP SWITCH ASSY – ECM)

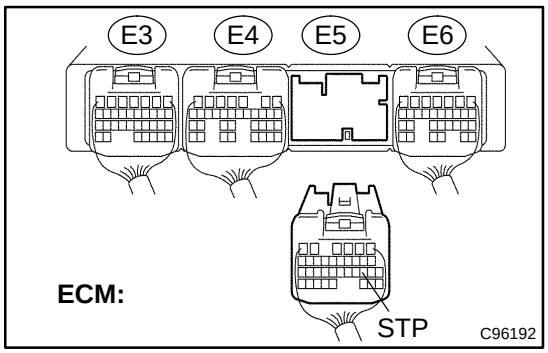

(a) Install the stop lamp switch assy.
(b) Disconnect the ECM connector.
(c) Measure the voltage according to the value(s) in the table below when the brake pedal is depressed and released.

Standard:

Condition	Tester Connection	Specified Condition
Brake pedal is depressed	E5 – 19 (STP) – Body ground	10 to 14 V
Brake pedal is released		Below 1 V

NG → REPAIR OR REPLACE HARNESS OR CONNECTOR (See page 01–30)

OK

REPLACE ECM (See page 10–11)

05DTS–01

CHECK MODE PROCEDURE

1. DTC CHECK (CHECK MODE)

HINT:

Hand–held tester only:

Compared to the normal mode, the check mode has more sensing ability to detect malfunctions. Furthermore, the same diagnostic items which are detected in the normal mode can also be detected in the check mode.

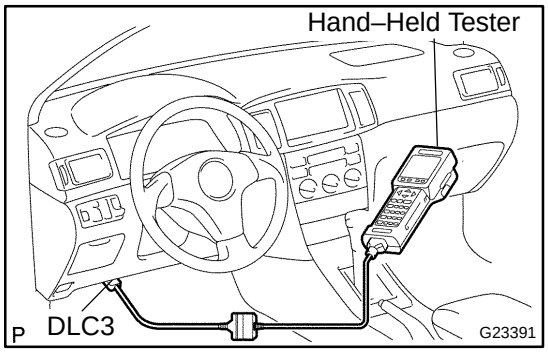

(a) Procedure for Check Mode using the hand–held tester.

(1) Check the initial conditions.
- Battery positive voltage 11 V or more
- Throttle valve fully closed
- Transaxle in the P or N position
- A/C switch is off

(2) Turn the ignition switch off.

(3) Connect the hand–held tester to the DLC3.

(4) Turn the ignition switch to the ON position.

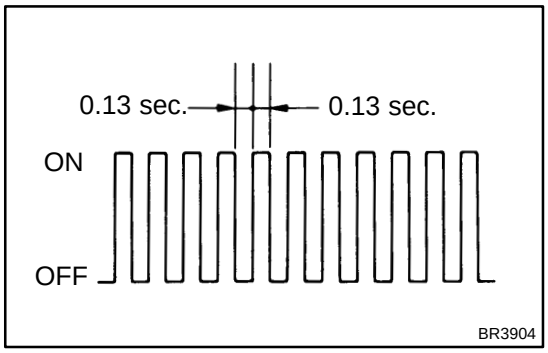

(5) Switch the hand–held tester from the normal mode to the check mode (Check that the MIL flashes).

NOTICE:

If the hand–held tester switches the ECM from the normal mode to the check mode or vice–versa, or if the ignition switch is turned from the ON position to the ACC or LOCK position during the check mode, the DTC and freeze frame data will be erased.

(6) Start the engine (MIL goes off after the engine starts).

(7) Simulate the conditions of the malfunction described by the customer.

NOTICE:

Leave the ignition switch in the ON position until you have checked the DTCs, etc.

(8) After simulating malfunction conditions, use the hand–held tester diagnosis selector to check the DTCs and freeze frame data, etc.

HINT:

Be sure not to turn the ignition switch off, as turning it off switches the diagnosis system from the check mode to the normal mode, which erases all the DTCs, etc.

(9) After checking the DTC, inspect the applicable circuit.

2. DTC CLEAR

(a) When using the OBD II scan tool or hand–held tester:
Clearing the DTCs.
  (1) Connect the OBD II scan tool or hand–held tester to the DLC3.
  (2) Turn the ignition switch to the ON position.
  (3) When operating the OBD II scan tool (complying with SAE J1978) or hand–held tester to erase the codes, the DTCs and freeze frame data will be erased. (See the OBD II scan tool's instruction book for operating instructions.)

(b) When not using the OBD II scan tool or hand–held tester:
Clearing the DTCs.
  (1) Disconnecting the battery terminal or remove the EFI and ETCS fuses from the engine room J/B for 60 seconds or more.

0527I–17

CUSTOMER PROBLEM ANALYSIS CHECK

Transaxle Control System Check Sheet	Inspector's Name :

Customer's Name		VIN	
		Production Date	/ /
		Licence No.	
Date Vehicle Brought In	/ /	Odometer Reading	km mile

Date Problem Occurred	/ /
How Often Does Problem Occur?	☐ Continuous ☐ Intermittent (times a day)

Symptoms	☐ Vehicle does not move (☐ Any position ☐ Particular position)
	☐ No up–shift (☐ 1st → 2nd ☐ 2nd → 3rd ☐ 3rd → O/D)
	☐ No down–shift (☐ O/D → 3rd ☐ 3rd → 2nd ☐ 2nd → 1st)
	☐ Lock–up malfunction
	☐ Shift point too high or too low
	☐ Harsh engagement (☐ N → D ☐ Lock–up ☐ Any drive position)
	☐ Slip or shudder
	☐ No kick–down
	☐ Others ( )

Check Item	MIL	☐ Normal ☐ Remains ON

DTC Check	1st Time	☐ Normal code ☐ Malfunction code (DTC)
	2nd Time	☐ Normal code ☐ Malfunction code (DTC)

05DTY–01

DATA LIST/ACTIVE TEST

1. DATA LIST

HINT:

According to the DATA LIST displayed by the OBD II scan tool or hand–held tester, you can read the value of the switch, sensor, actuator and so on without parts removal. Reading the DATA LIST as the first step of troubleshooting is one method to shorten labor time.

(a) Warm up the engine.
(b) Turn the ignition switch off.
(c) Connect the OBD II scan tool or hand–held tester to the DLC3.
(d) Turn the ignition switch to the ON position.
(e) According to the display on tester, read the ”DATA LIST”.

Item	Measurement Item/ Display (Range)	Normal Condition	Diagnostic Note
STOP LIGHT SW	Stop light SW Status/ ON or OFF	• Brake Pedal is depressed: ON • Brake Pedal is released: OFF	–
SHIFT	Actual Gear Position/ 1st, 2nd, 3rd, 4th (O/D)	Shift Lever Position is; • L: 1st • 2: 1st or 2nd • D(O/D OFF): 1st, 2nd or 3rd • D(O/D ON): 1st, 2nd, 3rd or 4th (O/D)	–
LOCK UP SOL	Lock Up Solenoid Status/ ON or OFF	• Lock Up: ON • Except Lock Up: OFF	–
PNP SW [NSW]	PNP SW Status/ ON or OFF	Shift lever position is; P or N: ON Except P or N: OFF	The shift lever position and these values are different, there are failures of the PNP switch or shift cable adjustment. HINT: When the failure still occurs even after adjusting these parts, See page 05–379.
LOW	PNP SW Status/ ON or OFF	Shift lever position is; L: ON Except L: OFF	
2ND	PNP SW Status/ ON or OFF	Shift lever position is; 2: ON Except 2: OFF	
REVERSE	PNP SW Status/ ON or OFF	Shift lever position is; R: ON Except R: OFF	
OVERDRV CUT SW1	O/D SW Status/ ON or OFF	• IG SW ON: ON ↓ • O/D SW Push: OFF ↓ • O/D SW Push: ON	–
OVERDRV CUT SW2 *	CCS O/D Cancel Signal/ ON or OFF	• O/D Cancel Signal input: ON • O/D Cancel Signal not input: OFF	–
SOLENOID (SLT)	Shift Solenoid SLT Status/ ON or OFF	IG SW ON: ON	–

*: w/ Cruise control

2. ACTIVE TEST

HINT:

Performing the ACTIVE TEST using the hand–held tester allows the relay, VSV, actuator and so on to operate without parts removal. Performing the ACTIVE TEST as the first step of troubleshooting is one method to shorten labor time.

It is possible to display the DATA LIST during the ACTIVE TEST.

(a) Warm up the engine.
(b) Turn the ignition switch off.
(c) Connect the hand–held tester to the DLC3.
(d) Turn the ignition switch to the ON position.
(e) According to the display on tester, perform the ”ACTIVE TEST”.

Item	Test Details	Diagnostic Note
SHIFT	[Test Details] Operate the shift solenoid valve and set the each shift position by yourself. [Vehicle Condition] Less than 50 km/h (31 mph) [Others] • Press → button: Shift up • Press ← button: Shift down	Possible to check the operation of the shift solenoid valves.
LOCK UP	[Test Details] Control the shift solenoid SL to set the ATM to the lock–up condition. [Vehicle Condition] Vehicle Speed: 58 km/h (36 mph) or more	Possible to check the SL operation.
LINE PRESS UP *	[Test Details] Operate the shift solenoid SLT and raise the line pressure. [Vehicle Condition] • Vehicle Stopped. • IDL: ON [Others] OFF: Line pressure up. ON: No action (normal operation)	–

*: ”LINE PRESS UP” in the ACTIVE TEST is performed to check the line pressure changes by connecting the SST to the automatic transaxle, which is used in the HYDRAULIC TEST as well.

HINT:

The pressure values in ACTIVE TEST and HYDRAULIC TEST are different from each other.

05DTZ–01

DEFINITION OF TERMS

Term	Definition
Monitor description	Description of what the ECM monitors and how it detects malfunctions (monitoring purpose and its details).
Related DTCs	Diagnostic code
Typical enabling condition	Preconditions that allow the ECM to detect malfunctions. With all preconditions satisfied, the ECM sets the DTC when the monitored value(s) exceeds the malfunction threshold(s).
Sequence of operation	The priority order that is applied to monitoring, if multiple sensors and components are used to detect the malfunction. While another sensor is being monitored, the next sensor or component will not be monitored until the previous monitoring has concluded.
Required sensor/components	The sensors and components that are used by the ECM to detect malfunctions.
Frequency of operation	The number of times that the ECM checks for malfunctions per driving cycle. ”Once per driving cycle” means that the ECM detects malfunction only one time during a single driving cycle. ”Continuous” means that the ECM detects malfunction every time when enabling condition is met during a single driving cycle.
Duration	The minimum time that the ECM must sense a continuous deviation in the monitored value(s) before setting a DTC. This timing begins after the ”typical enabling conditions” are met.
Malfunction thresholds	Beyond this value, the ECM will conclude that there is a malfunction and set a DTC.
MIL operation	MIL illumination timing after a defect is detected. ”Immediately” means that the ECM illuminates MIL the instant the ECM determines that there is a malfunction. ”2 driving cycle” means that the ECM illuminates MIL if the same malfunction is detected again in the 2 nd driving cycle.

05DTQ–01

DIAGNOSIS SYSTEM

(a) Description

(1) When troubleshooting OBD II vehicles, the only difference from the usual troubleshooting procedure is that you need to connect an OBD II scan tool complying with SAE J1987 or a hand–held tester to the vehicle, and read off various data output from the vehicle's ECM.

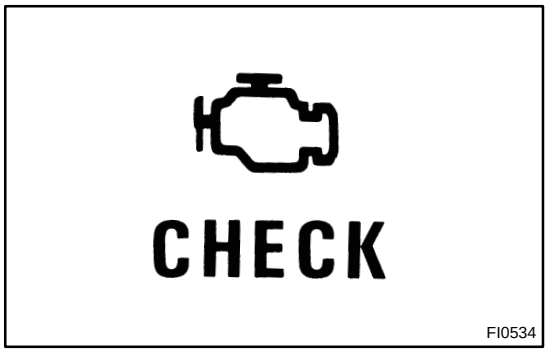

(2) OBD II regulations require that the vehicle's on–board computer illuminate the Malfunction Indicator Lamp (MIL) on the instrument panel when the computer detects a malfunction in the computer itself or in the drive system components which affect the vehicle emissions. In addition to the MIL illuminating when a malfunction is detected, the applicable DTCs prescribed by SAE J2012 are recorded in the ECM memory (See page 05–372).

If the malfunction does not occur in 3 consecutive trips, the MIL goes off but the DTCs remain in the ECM memory.

(3) To check the DTCs, connect the OBD II scan tool or hand–held tester to the DLC3 of the vehicle. The OBD II scan tool or hand–held tester also enables you to erase the DTCs and check freeze frame data and various forms of engine data (For instruction book).

(4) The DTCs include SAE controlled codes and Manufacturer controlled codes. SAE controlled codes must be set as prescribed by the SAE, while Manufacturer controlled codes can be set freely by a manufacturer within the prescribed limits (See the DTC chart on page 05–372).

(5) The diagnosis system operates in the normal mode during the normal vehicle use, and also has a check mode for technicians to simulate malfunction symptoms and perform troubleshooting. Most DTCs use 2 trip detection logic(*) to prevent erroneous detection. By switching the ECM to the check mode when troubleshooting, the technician can cause the MIL to illuminate for a malfunction that is only detected once or momentarily. (hand–held tester).

(6) *2 trip detection logic:
When a malfunction is first detected, the malfunction is temporarily stored in the ECM memory. If the same malfunction is detected again during the second test drive, this second detection causes the MIL to illuminate.

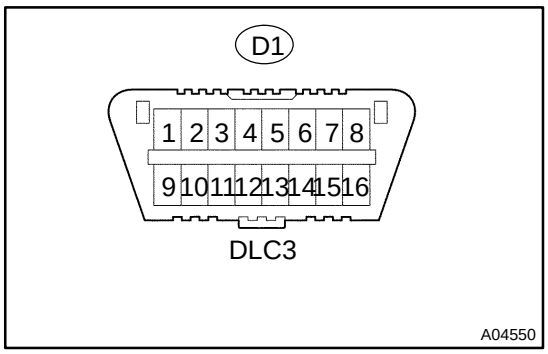

(b) Inspect the DLC3.

The vehicle's ECM uses ISO 9141–2 for communication. The terminal arrangement of DLC3 complies with SAE J1962 and matches the ISO 9141–2 format.

Tester connection	Condition	Specified condition
7 (Bus ⊕ Line) – 5 (Signal ground)	During communication	Pulse generation
4 (Chassis Ground) – Body	Always	1 Ω or less
5 (Signal Ground) – Body	Always	1 Ω or less
16 (B+) – Body	Always	9 to 14 V

HINT:

If your display shows UNABLE TO CONNECT TO VEHICLE when you have connected the cable of the OBD II scan tool or hand–held tester to the DLC3, turned the ignition switch to the ON position and operated the scan tool, there is a problem on the vehicle side or tool side.

- If the communication is normal when the tool is connected to another vehicle, inspect the DLC3 on the original vehicle.
- If the communication is still impossible when the tool is connected to another vehicle, the problem is probably in the tool itself, so consult the Service Department listed in the tool's instruction manual.

(c) Measure the battery voltage.

Battery Voltage: 11 to 14 V

If voltage is below 11 V, recharge the battery before proceeding.

(d) Check the MIL.

(1) The MIL comes on when the ignition switch is turned to the ON position and the engine is not running.

HINT:

If the MIL does not light up, troubleshoot the combination meter.

(2) When the engine is started, the MIL should go off. If the lamp remains on, it means that the diagnosis system has detected a malfunction or abnormality in the system.

05DTR–01

DTC CHECK/CLEAR

1. DTC CHECK (NORMAL MODE)

NOTICE:

Hand–held tester only:

When the diagnostic system is switched from the normal mode to the check mode, all the DTCs and freeze frame data recorded in the normal mode will be erased. So before switching modes, always check the DTCs and freeze frame data, and note them down.

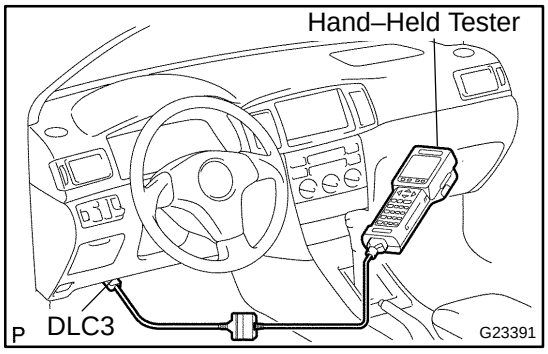

(a) Checking DTCs using the OBD II scan tool or hand–held tester.
  (1) Turn the ignition switch off.
  (2) Connect the OBD II scan tool or hand–held tester to DLC3.
  (3) Turn the ignition switch to the ON position.
  (4) Use the OBD II scan tool or hand–held tester to check the DTCs and freeze frame data and note them down (For operating instructions, see the OBD II scan tool's instruction book).
  (5) See page 05–372 to confirm the details of the DTCs.

NOTICE:

When simulating symptoms with an OBD II scan tool (excluding hand–held tester) to check the DTCs, use the normal mode. For codes on the DTCs chart subject to "2 trip detection logic", turn the ignition switch off after the symptom is simulated once. Then repeat the simulation process again. When the problem has been simulated twice, the MIL is indicated on the instrument panel and DTCs are recorded in the ECM.

2. DTC CLEAR

(a) When using the OBD II scan tool or hand–held tester: Clearing the DTCs.
  (1) Connect the OBD II scan tool or hand–held tester to the DLC3.
  (2) Turn the ignition switch to the ON position.
  (3) When operating the OBD II scan tool (complying with SAE J1978) or hand–held tester to erase the codes, the DTCs and freeze frame data will be erased. (See the OBD II scan tool's instruction book for operating instructions.)

(b) When not using the OBD II scan tool or hand–held tester: Clearing the DTCs.
  (1) Disconnecting the battery terminal or remove the EFI and ETCS fuses from the engine room J/B for 60 seconds or more.

0527K–19

DIAGNOSTIC TROUBLE CODE CHART

If a DTC is displayed during the DTC check, check the circuit listed in the table below and proceed to the page given.

* : ● ... MIL light up

DTC No. (See Page)	Detection Item	Trouble Area	MIL *	Memory
P0500 (05–247)	Vehicle Speed Sensor ”A”	• Combination meter • Open or short in vehicle speed sensor circuit • Vehicle speed sensor • ECM	●	○
P0705 (05–379)	Transmission Range Sensor Circuit Malfunction (PRNDL Input)	• Open or short in park/neutral position switch circuit • Park/neutral position switch • ECM	●	○
P0724 (05–384)	Brake Switch ”B” Circuit High	• Short in stop light switch circuit • Stop light switch • ECM	●	○
P0741 (05–386)	Torque Converter Clutch Solenoid Performance (Shift Solenoid Valve SL)	• Shift solenoid valve SL remains open or closed • Valve body is blocked • Shift solenoid valve SL • Lock–up clutch • Torque converter clutch • Automatic transaxle (clutch, brake or gear etc.) • ECM	●	○
P0751 (05–389)	Shift Solenoid ”A” Performance (Shift Solenoid Valve S1)	• Shift solenoid valve S1 remains open or closed • Valve body is blocked • Shift solenoid valve S1 • Automatic transaxle (clutch, brake or gear etc.) • ECM	●	○
P0756 (05–394)	Shift Solenoid ”B” Performance (Shift Solenoid Valve S2)	• Shift solenoid valve S2 remains open or closed • Valve body is blocked • Shift solenoid valve S2 • Automatic transaxle (clutch, brake or gear etc.) • ECM	●	○
P0850 (05–379)	Park/Neutral Switch Input Circuit	• Short in park/neutral position switch circuit • Park/neutral position switch • ECM	●	○
P0973 (05–402)	Shift Solenoid ”A” Control Circuit Low (Shift Solenoid Valve S1)	• Short in shift solenoid valve S1 circuit • Shift solenoid valve S1 • ECM	●	○
P0974 (05–402)	Shift Solenoid ”A” Control Circuit High (Shift Solenoid Valve S1)	• Open in shift solenoid valve S1 circuit • Shift solenoid valve S1 • ECM	●	○
P0976 (05–406)	Shift Solenoid ”B” Control Circuit Low (Shift Solenoid Valve S2)	• Short in shift solenoid valve S2 circuit • Shift solenoid valve S2 • ECM	●	○
P0977 (05–406)	Shift Solenoid ”B” Control Circuit High (Shift Solenoid Valve S2)	• Open in shift solenoid valve S2 circuit • Shift solenoid valve S2 • ECM	●	○
P2716 (05–409)	Pressure Control Solenoid ”D” Electrical (Shift Solenoid Valve SLT)	• Open or short in shift solenoid valve SLT circuit • Shift solenoid valve SLT • ECM	●	○

P2769 (05–413)	Torque Converter Clutch Solenoid Circuit Low (Shift Solenoid Valve SL)	• Short in shift solenoid valve SL circuit • Shift solenoid valve SL • ECM	●	○
P2770 (05–413)	Torque Converter Clutch Solenoid Circuit High (Shift Solenoid Valve SL)	• Open in shift solenoid valve SL circuit • Shift solenoid valve SL • ECM	●	○

05DTV–01

HYDRAULIC TEST

1. PERFORM HYDRAULIC TEST

(a) Measure the line pressure.

NOTICE:

- **Do the test at normal operation ATF temperature 50 to 80 ˚C (122 to 176 ˚F).**
- **The line pressure test should always be carried out in pairs. One technician should observe the conditions of wheels or wheel stopper outside the vehicle while the other is doing the test.**
- **Be careful to prevent SST's hose from interfering with the exhaust pipe.**

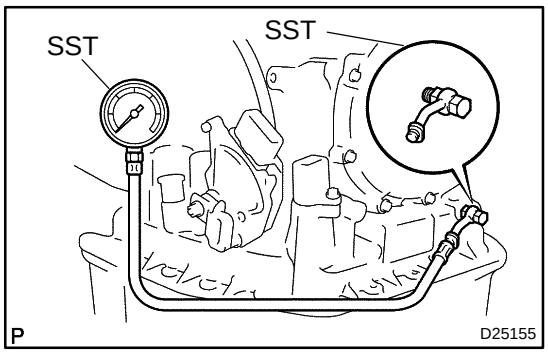

(1) Warm up the ATF.
(2) Remove the test plug on the transaxle case front left side and connect SST.

SST 09992–00095 (09992–00231, 09992–00271)

(3) Fully apply the parking brake and chock the 4 wheels.
(4) Connect an OBD II scan tool or hand–held tester to the DLC3.
(5) Start the engine and check the idling speed.
(6) Keep your left foot pressed firmly on the brake pedal and shift into the D position.
(7) Measure the line pressure when the engine is idling.
(8) Depress the accelerator pedal all the way down. Quickly read the highest line pressure when the engine speed reaches the stall speed.
(9) Do the test in the R position in the same way.

Specified line pressure:

Condition	D position kPa (kgf/cm^2, psi)	R position kPa (kgf/cm^2, psi)
Idling	324 to 451 (3.3 to 4.6, 47 to 65)	577 to 817 (5.9 to 8.3, 84 to 118)
Stall	713 to 844 (7.27 to 8.61, 103 to 122)	1,520 to 1,755 (15.5 to 17.9, 220 to 254)

Evaluation:

Problem	Possible cause
If the measured values at all positions are higher	• Line pressure control solenoid (SLT) defective • Regulator valve defective
If the measured values at all positions are lower	• Line pressure control solenoid (SLT) defective • Regulator valve defective • Oil pump defective • O/D direct clutch defective
If pressure is low in the D position only	• D position circuit fluid leak • Forward clutch defective
If pressure is low in the R position only	• R position circuit fluid leak • Direct clutch defective • 1st and reverse brake defective

05DU1–01

LIST OF DISABLE A MONITER

HINT:

This table indicates ECM monitoring status for the items in the upper columns if the DTCs in each line on the left are being set.

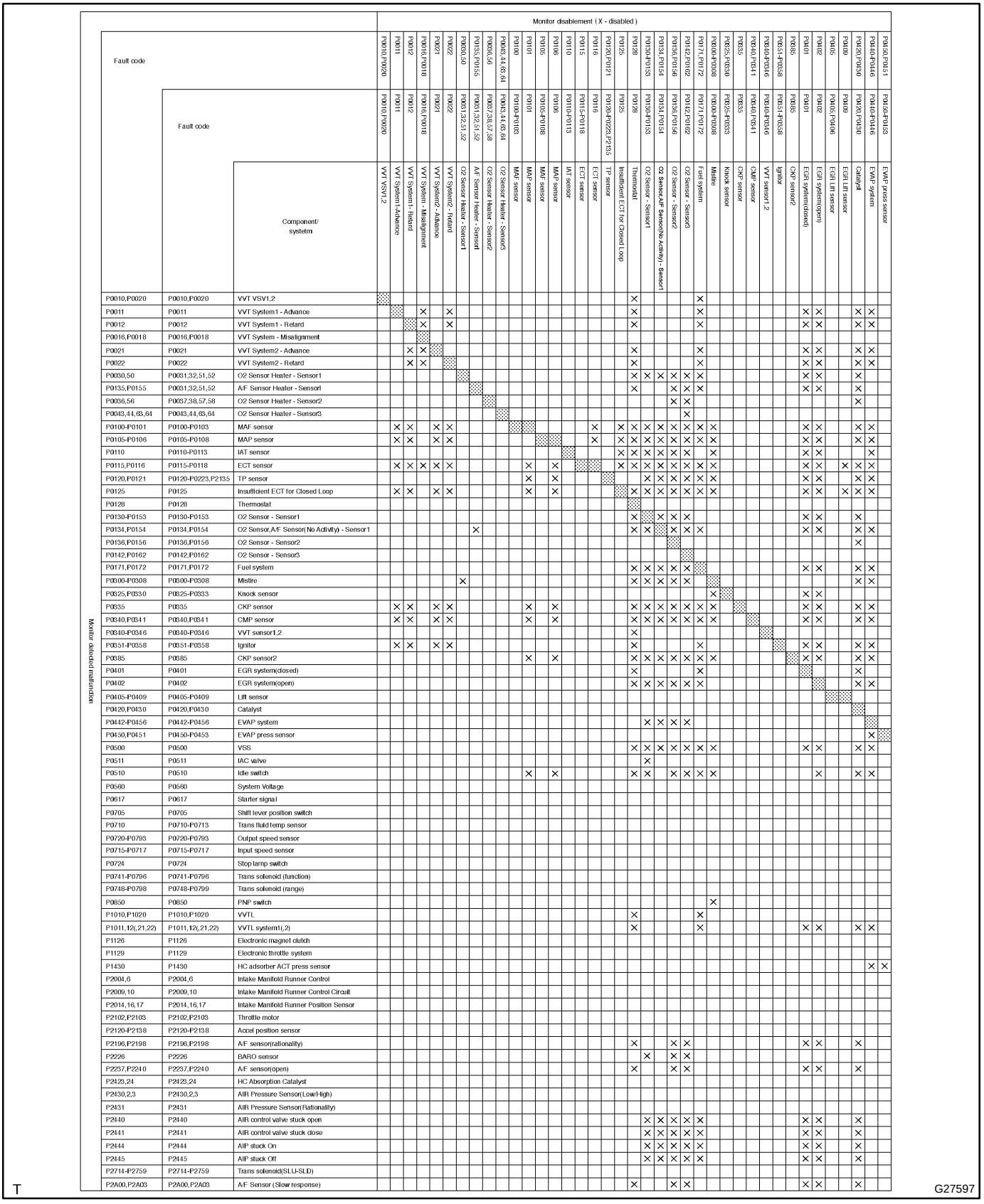

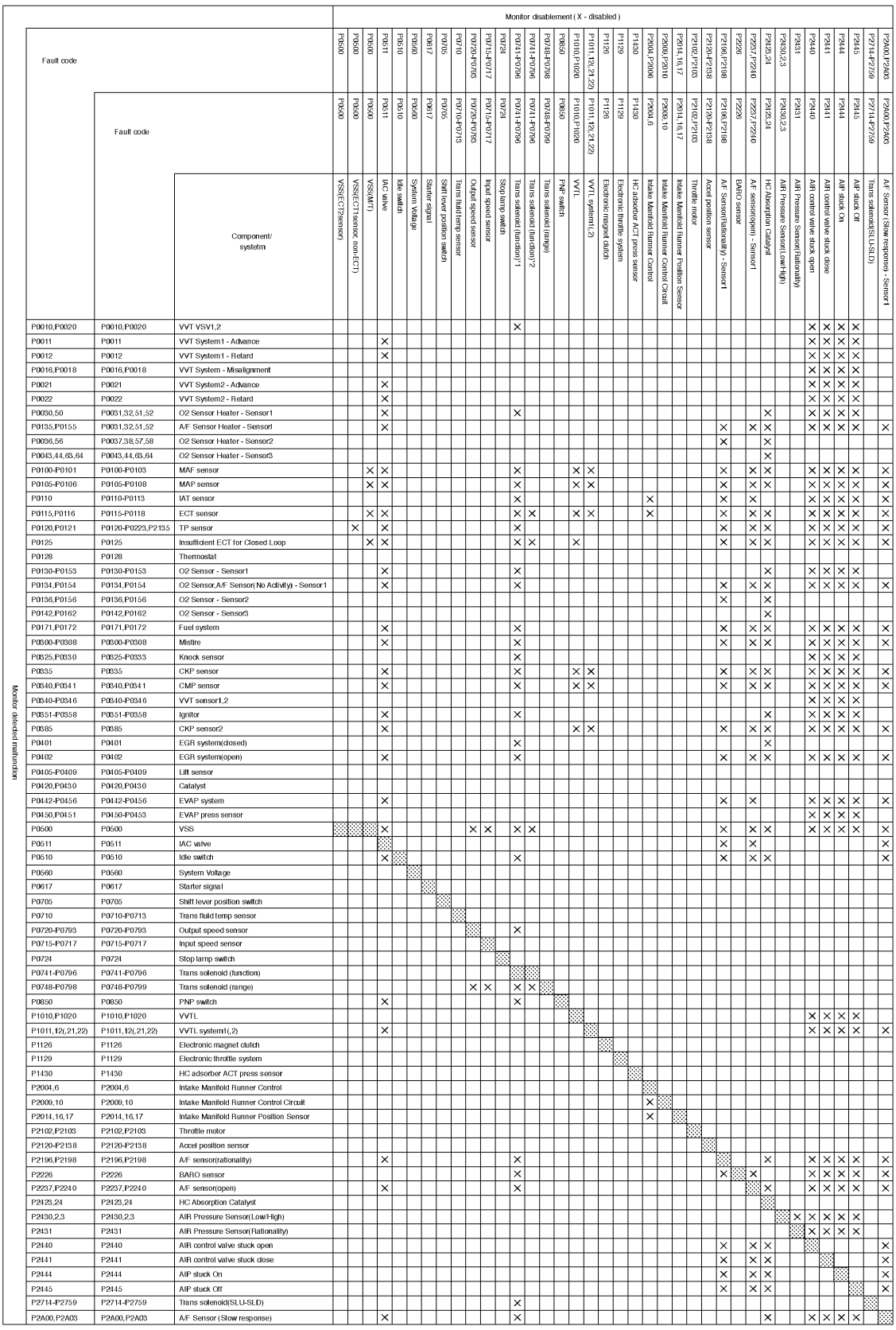
Monitor disablement (X - disabled)
Fault code
Fault code
Component/ system
Monitor disclosed malfunction
P0010,P0020 | P0010,P0020 | VVT VSV1,2
P0011 | P0011 | VVT System1 - Advance
P0012 | P0012 | VVT System1 - Retard
P0016,P0018 | P0016,P0018 | VVT System - Misalignment
P0021 | P0021 | VVT System2 - Advance
P0022 | P0022 | VVT System2 - Retard
P0030,50 | P0031,32,51,52 | O2 Sensor Heater - Sensor1
P0135,P0155 | P0031,32,51,52 | A/F Sensor Heater - Sensor1
P0036,56 | P0037,38,57,58 | O2 Sensor Heater - Sensor2
P0043,44,63,64 | P0043,44,63,64 | O2 Sensor Heater - Sensor3
P0100-P0101 | P0100-P0103 | MAF sensor
P0105-P0106 | P0105-P0108 | MAP sensor
P0110 | P0110-P0113 | IAT sensor
P0115,P0116 | P0115-P0118 | ECT sensor
P0120,P0121 | P0120-P0223,P2135 | TP sensor
P0125 | P0125 | Insufficient ECT for Closed Loop
P0128 | P0128 | Thermostat
P0130-P0153 | P0130-P0153 | O2 Sensor - Sensor1
P0134,P0154 | P0134,P0154 | O2 Sensor,A/F Sensor(No Activity) - Sensor1
P0136,P0156 | P0136,P0156 | O2 Sensor - Sensor2
P0142,P0162 | P0142,P0162 | O2 Sensor - Sensor3
P0171,P0172 | P0171,P0172 | Fuel system
P0300-P0308 | P0300-P0308 | Misfire
P0325,P0330 | P0325-P0333 | Knock sensor
P0335 | P0335 | CKP sensor
P0340,P0341 | P0340,P0341 | CMP sensor
P0340-P0346 | P0340-P0346 | VVT sensor1,2
P0351-P0358 | P0351-P0358 | Ignitor
P0385 | P0385 | CKP sensor2
P0401 | P0401 | EGR system(closed)
P0402 | P0402 | EGR system(open)
P0405-P0409 | P0405-P0409 | Lift sensor
P0420,P0430 | P0420,P0430 | Catalyst
P0442-P0456 | P0442-P0456 | EVAP system
P0450,P0451 | P0450-P0453 | EVAP press sensor
P0500 | P0500 | VSS
P0511 | P0511 | IAC valve
P0510 | P0510 | Idle switch
P0560 | P0560 | System Voltage
P0617 | P0617 | Starter signal
P0705 | P0705 | Shift lever position switch
P0710 | P0710-P0713 | Trans fluid temp sensor
P0720-P0793 | P0720-P0793 | Output speed sensor
P0715-P0717 | P0715-P0717 | Input speed sensor
P0724 | P0724 | Stop lamp switch
P0741-P0796 | P0741-P0796 | Trans solenoid (function)
P0748-P0798 | P0748-P0799 | Trans solenoid (range)
P0850 | P0850 | PNP switch
P1010,P1020 | P1010,P1020 | VVTL
P1011,12(,21,22) | P1011,12(,21,22) | VVTL system1(,2)
P1126 | P1126 | Electronic magnet clutch
P1129 | P1129 | Electronic throttle system
P1430 | P1430 | HC adsorber ACT press sensor
P2004,6 | P2004,6 | Intake Manifold Runner Control
P2009,10 | P2009,10 | Intake Manifold Runner Control Circuit
P2014,16,17 | P2014,16,17 | Intake Manifold Runner Position Sensor
P2102,P2103 | P2102,P2103 | Throttle motor
P2120-P2138 | P2120-P2138 | Accel position sensor
P2196,P2198 | P2196,P2198 | A/F Sensor(Rationality) - Sensor1
P2226 | P2226 | BARO sensor
P2237,P2240 | P2237,P2240 | A/F sensor(open) - Sensor1
P2423,24 | P2423,24 | HC Absorption Catalyst
P2430,2,3 | P2430,2,3 | AIR Pressure Sensor(Low/High)
P2431 | P2431 | AIR Pressure Sensor(Rationality)
P2440 | P2440 | AIR control valve stuck open
P2441 | P2441 | AIR control valve stuck close
P2444 | P2444 | AIP stuck On
P2445 | P2445 | AIP stuck Off
P2714-P2759 | P2714-P2759 | Trans solenoid(SLU-SLD)
P2A00,P2A03 | P2A00,P2A03 | A/F Sensor (Slow response) - Sensor1
VSS(ECT2sensor)
VSS(ECT1sensor,non-ECT)
VSS(M/T)
IAC valve
Idle switch
System Voltage
Starter signal
Shift lever position switch
Trans fluid temp sensor
Output speed sensor
Input speed sensor
Stop lamp switch
Trans solenoid (function)*1
Trans solenoid (function)*2
Trans solenoid (range)
PNP switch
VVTL
VVTL system1(,2)
Electronic magnet clutch
Electronic throttle system
HC adsorber ACT press sensor
Intake Manifold Runner Control
Intake Manifold Runner Control Circuit
Intake Manifold Runner Position Sensor
Throttle motor
Accel position sensor
A/F Sensor(Rationality) - Sensor1
BARO sensor
A/F sensor(open) - Sensor1
HC Absorption Catalyst
AIR Pressure Sensor(Low/High)
AIR Pressure Sensor(Rationality)
AIR control valve stuck open
AIR control valve stuck close
AIP stuck On
AIP stuck Off
Trans solenoid(SLU-SLD)
A/F Sensor (Slow response) - Sensor1

T

G27598

0527L–18

LOCATION

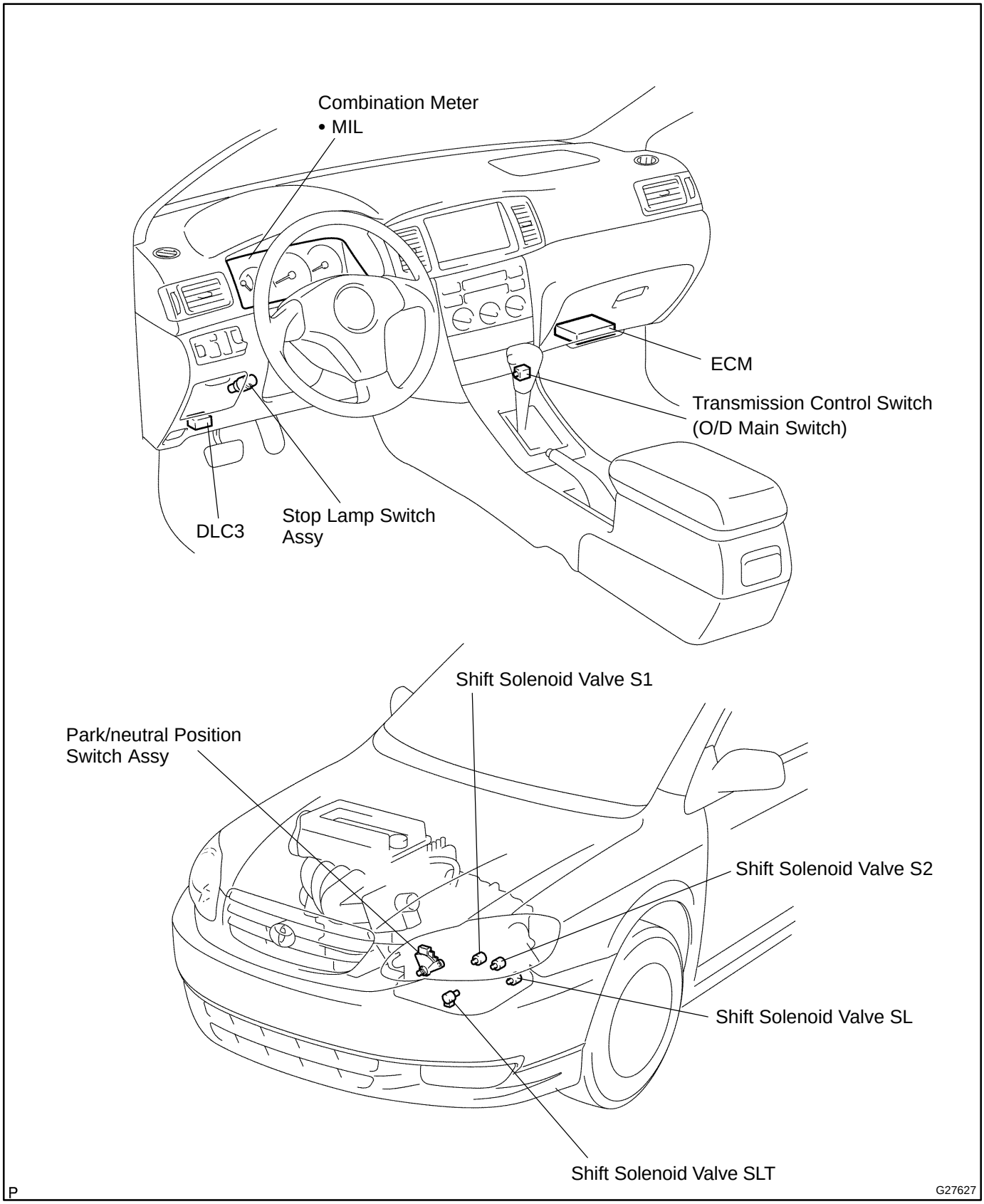

05DTW–01

MANUAL SHIFTING TEST

1. PERFORM MANUAL SHIFTING TEST

HINT:

By this test, it can be determined whether the trouble is within the electrical circuit or is a mechanical problem in the transaxle.

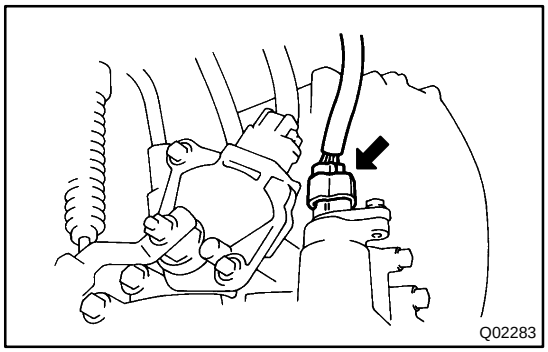

(a) Disconnect the transmission wire connector.

(b) Inspect the manual driving operation.

Check that the shift and gear positions correspond to the table below.

While driving, shift through the L, 2 and D positions.

Check that the gear change corresponds to the shift position.

Shift Position	Gear Position
D	O/D
2	O/D
L	1st
R	Reverse
P	Pawl Lock

HINT:

If the gear positions of the L, 2 and D are difficult to distinguish, do the following road test.

If any abnormality is found in the above test, the problem is in the transaxle itself.

(c) Connect the transmission wire connector.

(d) Clear the DTC (See page 05–353).

05DTU–01

MECHANICAL SYSTEM TESTS

1. PERFORM MECHANICAL SYSTEM TESTS

(a) Measure the stall speed.

The object of this test is to check the overall performance of the transaxle and engine by measuring the stall speeds in the D and R positions.

NOTICE:

- **Do the test at normal operating ATF temperature 50 to 80 ˚C (122 to 176 ˚F).**
- **Do not continuously run this test for longer than 5 seconds.**
- **To ensure safety, do this test in a wide, clear level area which provides good traction.**
- **The stall test should always be carried out in pairs. One technician should observe the conditions of wheels or wheel stoppers outside the vehicle while the other is doing the test.**

(1) Chock the 4 wheels.

(2) Connect an OBD II scan tool or hand–held tester to the DLC3.

(3) Fully apply the parking brake.

(4) Keep your left foot pressed firmly on the brake pedal.

(5) Start the engine.

(6) Shift into the D position. Press all the way down on the accelerator pedal with your right foot.

(7) Quickly read the stall speed at this time.

Stall speed: 2,550 ± 150 rpm

(8) Do the same test in the R position.

Stall speed: 2,550 ± 150 rpm

Evaluation:

Problem	Possible cause
(a) Stall speed low in D and R positions	• Engine output may be insufficient • Stator one–way clutch not operating properly HINT: If the value is less than the specified value by 600 rpm or more, the torque converter could be faulty.
(b) Stall speed high in D position	• Line pressure too low • Forward clutch slipping • No. 2 one–way clutch not operating properly • U/D one–way clutch not operating properly
(c) Stall speed high in R position	• Line pressure too low • Direct clutch slipping • 1st and reverse brake slipping • U/D brake slipping
(d) Stall speed high in D and R positions	• Line pressure too low • Improper fluid level • U/D one–way clutch not operating properly

(b) Measure the time lag.

(1) When the shift lever is shifted while the engine is idling, there will be a certain time lapse or lag before the shock can be felt. This is used for checking the condition of the direct clutch, forward clutch, and 1st and reverse brake.

NOTICE:

- **Do the test at normal operating ATF temperature 50 to 80 ˚C (122 to 176 ˚F).**
- **Be sure to allow 1 minute interval between tests.**
- **Take 3 measurements and take the average value.**

(2) Connect an OBD II scan tool or hand–held tester to the DLC3.

(3) Fully apply the parking brake.

(4) Start the engine and check idle speed.

Idle speed: 650 ± 50 rpm (In N position and A/C OFF)

(5) Shift the shift lever from the N to D position. Using a stop watch, measure the time from when the lever is shifted until the shock is felt.

(6) Measure the time lag of N → R in the same way.

Time lag:

N → D Less than 1.2 seconds

N → R Less than 1.5 seconds

Evaluation (If N → D time or N → R time lag is longer than specified):

Problem	Possible cause
N → D time lag is longer	• Line pressure too low • Forward clutch worn • U/D one–way clutch not operating properly
N → R time lag is longer	• Line pressure too low • Direct clutch worn • 1st and reverse brake worn • U/D one–way clutch not operating properly

O/D CANCEL SIGNAL CIRCUIT

CIRCUIT DESCRIPTION

While driving uphill with cruise control activated, in order to minimize gear shifting and provide smooth cruising overdrive may be prohibited temporarily under some conditions.
The cruise control ECU sends O/D cut signals to the ECM as necessary and the ECM cancels overdrive shifting until these signals are discontinued.

WIRING DIAGRAM

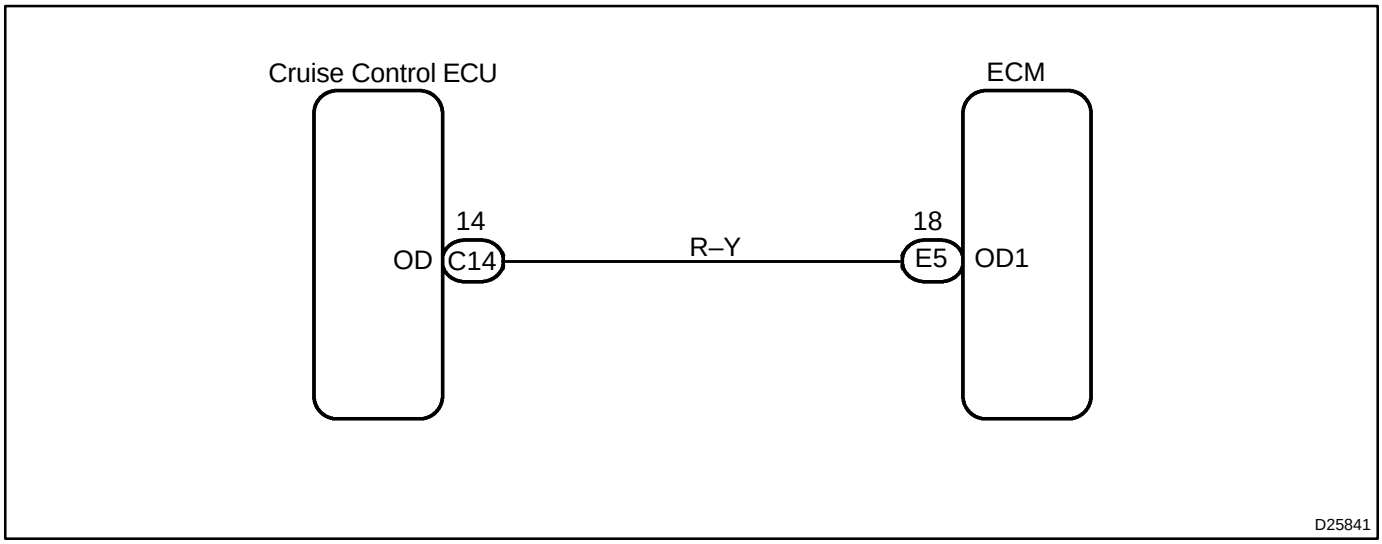

INSPECTION PROCEDURE

1	INSPECT TERMINAL VOLTAGE(OD – BODY GROUND)

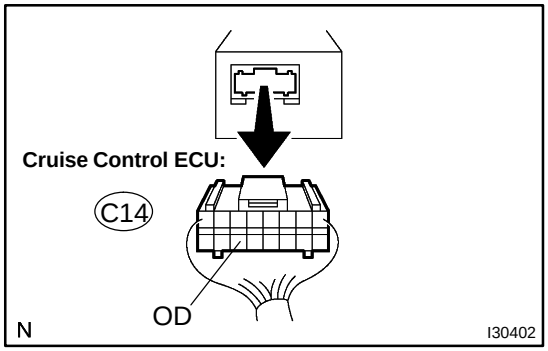

(a) Disconnect the cruise control ECU connector.
(b) Turn the ignition switch to the ON position.
(c) Measure the voltage between terminal OD of cruise control ECU and body ground.

Standard:

Condition	Tester Connection	Specified Condition
IG switch ON	C14 – 14 (OD) – Body ground	10 to 14 V
IG switch OFF		Below 1 V

OK → **CHECK AND REPLACE CRUISE CONTROL ECU ASSY (See page 05–752)**

NG

2 INSPECT TERMINAL VOLTAGE(OD1 – BODY GROUND)

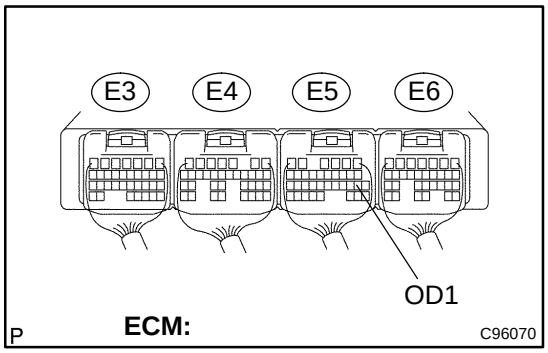

(a) Measure the voltage between terminal OD1 of ECM and body ground.

Standard:

Condition	Tester Connection	Specified Condition
IG switch ON	E5 – 18 (OD1) – Body ground	10 to 14 V
IG switch OFF		Below 1 V

OK → **REPAIR OR REPLACE HARNESS OR CONNECTOR (See page 01–30)**

NG

3 CHECK HARNESS AND CONNECTOR(OD1 – BODY GROUND)

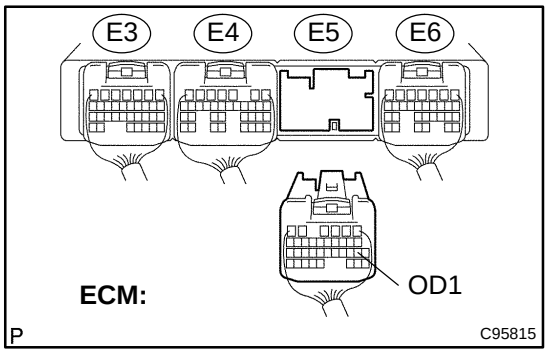

(a) Disconnect the ECM connector.

(b) Measure the resistance according to the value(s) in the table below.

Standard (Check for short):

Tester Connection	Specified Condition
E5 – 18 (OD1) – Body ground	10 kΩ or higher

NG → **REPAIR OR REPLACE HARNESS OR CONNECTOR (See page 01–30)**

OK

PROCEED TO NEXT CIRCUIT INSPECTION SHOWN ON PROBLEM SYMPTOMS TABLE (See page 05–374)

O/D MAIN SWITCH CIRCUIT

CIRCUIT DESCRIPTION

The O/D main switch (transmission control switch) is a momentary type switch. When pressing the O/D main switch, the O/D OFF indicator light lights up and the ECM prohibits shifting into O/D, and when pressing it once again, the O/D OFF indicator light goes off and the ECM allows shifting into O/D. Turning the IG switch OFF will reset the O/D OFF indicator light.

WIRING DIAGRAM

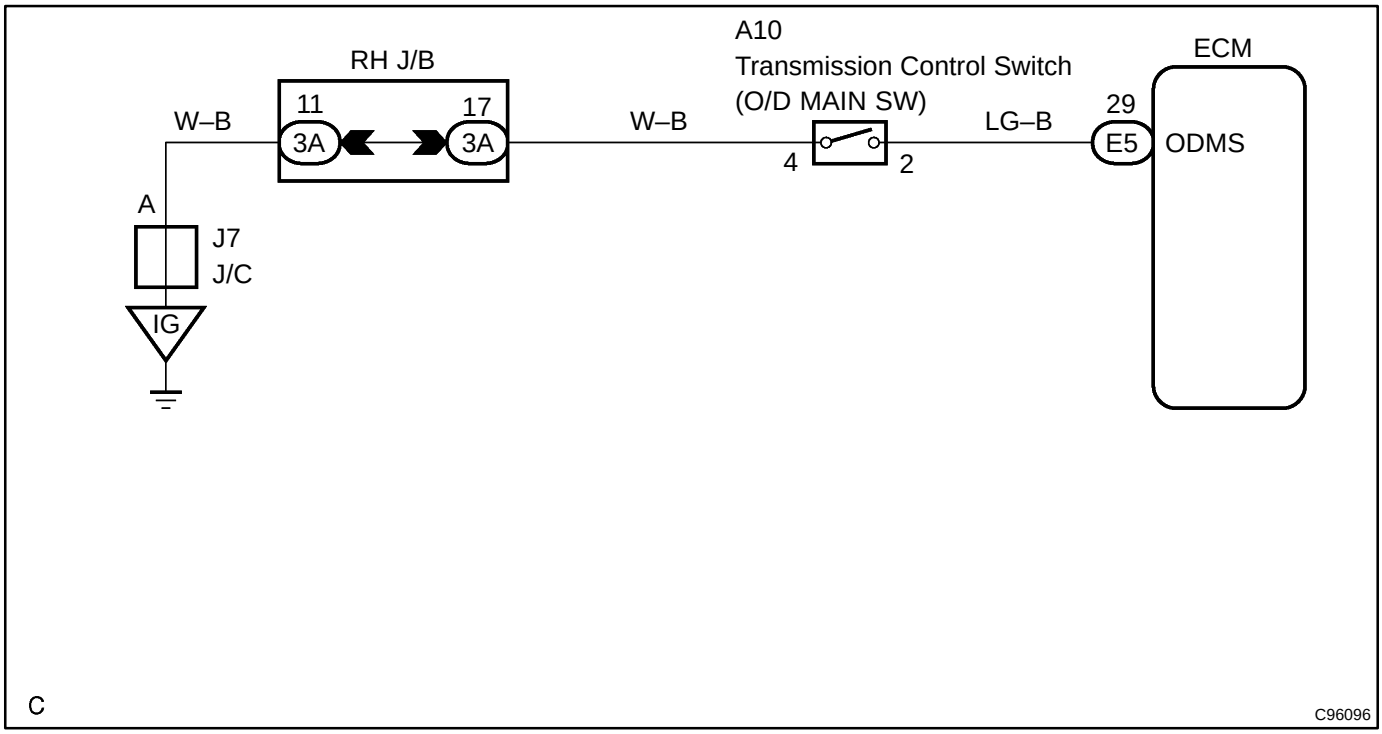

INSPECTION PROCEDURE

1	CHECK HARNESS AND CONNECTOR(TRANSMISSION CONTROL SWITCH – BODY GROUND)

Wire Harness Side:
(Connector Front View):

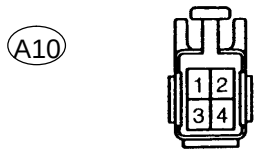

(a) Disconnect the transmission control switch connector of shift lever assy.

(b) Measure the resistance according to the value(s) in the table below.

Standard:

Tester Connection	Specified Condition
4 – Body ground	Below 1 Ω

NG → **REPAIR OR REPLACE HARNESS OR CONNECTOR (See page 01–30)**

OK

2 INSPECT TRANSMISSION CONTROL SWITCH

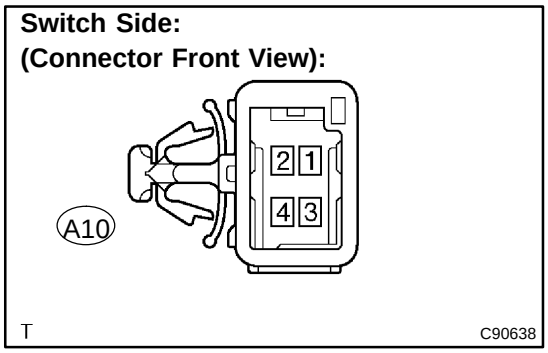

(a) Measure the resistance according to the value(s) in the table below.

Standard:

Switch Condition	Tester Connection	Specified Condition
Press continuously transmission control switch	2 – 4	Below 1 Ω
Release transmission control switch		10 kΩ or higher

NG → **REPLACE TRANSMISSION CONTROL SWITCH**

OK

3 CHECK HARNESS AND CONNECTOR(TRANSMISSION CONTROL SWITCH – ECM)

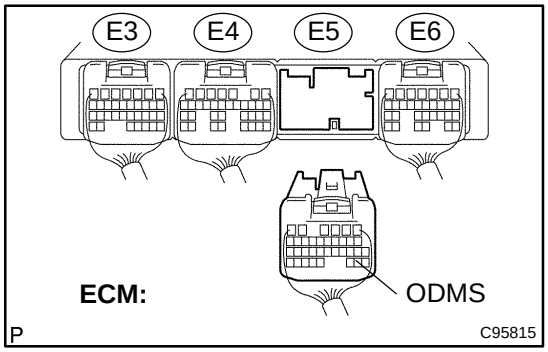

(a) Connect the transmission control switch connector of shift lever assy.

(b) Disconnect the ECM connector.

(c) Measure the resistance according to the value(s) in the table below.

Standard:

Switch Condition	Tester Connection	Specified Condition
Press continuously transmission control switch	E5 – 29 (ODMS) – Body ground	Below 1 Ω
Release transmission control switch		10 kΩ or higher

NG → **REPAIR OR REPLACE HARNESS OR CONNECTOR (See page 01–30)**

OK

PROCEED TO NEXT CIRCUIT INSPECTION SHOWN ON PROBLEM SYMPTOMS TABLE (See page 05–374)

DTC	P2716	PRESSURE CONTROL SOLENOID ”D” ELECTRICAL (SHIFT SOLENOID SLT)

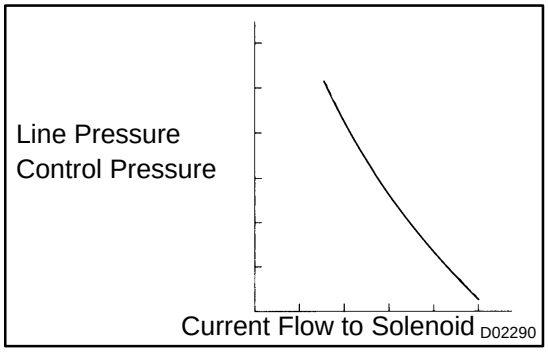

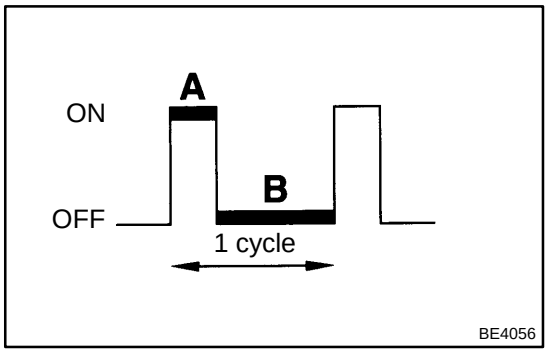

CIRCUIT DESCRIPTION

The throttle pressure that is applied to the primary regulator valve (which modulates the line pressure) causes the solenoid valve SLT, under electronic control, to precisely and minutely modulate and generate the line pressure according the extent of the accelerator pedal depressed or the output of engine power.

This controls the line pressure and provides smooth shifting.

Upon receiving a signal of the throttle valve opening angle, the ECM controls the line pressure by sending a predetermined (*) duty ratio to the solenoid valve, modulating the line pressure and generating throttle pressure.

(*): Duty Ratio

The duty ratio is the ratio of the period of continuity in one cycle. For example, if A is the period of continuity in one cycle, and B is the period of non–continuity, then

Duty Ratio=A/(A+B) x 100 (%)

DTC No.	DTC Detection Condition	Trouble Area
P2716	Condition (a) or (b) below is detected 1 sec. or more: (1–trip detection logic) (a) SLT– terminal: 0V (b) SLT– terminal: 12V	• Open or short in shift solenoid valve SLT circuit • Shift solenoid valve SLT • ECM

MONITOR DESCRIPTION

The linear solenoid valve (SLT) controls the transmission line pressure for smooth transmission operation based on signals from the throttle position sensor and the vehicle speed sensor. The ECM adjusts the duty cycle of the SLT solenoid valve to control hydraulic line pressure coming from the primary regulator valve. Appropriate line pressure assures smooth shifting with varying engine outputs. When an open or short in the linear solenoid valve (SLT) circuit is detected, the ECM interprets this as a fault. The ECM will turn ON the MIL.

MONITOR STRATEGY

Related DTCs	P2716	Pressure control solenoid ”D”/Range check
Required sensors/Components	Shift solenoid valve SLT	
Frequency of operation	Continuous	
Duration	1 sec.	
MIL operation	Immediate	
Sequence of operation	None	

TYPICAL ENABLING CONDITION

Item	Specification	
	Minimum	Maximum
The monitor will run whenever the following DTCs are not present.	See page 05–369	
Solenoid current shout OFF	Not shut OFF	
Battery voltage	11 V or more	–
CPU commanded duty ratio	19 % or more	–

TYPICAL MALFUNCTION THRESHOLDS

Detection criteria	Threshold
Diagnostic signal from MIC	Fail

COMPONENT OPERATING RANGE

Parameter	Standard value
Shift solenoid valve SLT resistance	5.0 to 5.6 Ω at 20°C (68°F)

WIRING DIAGRAM

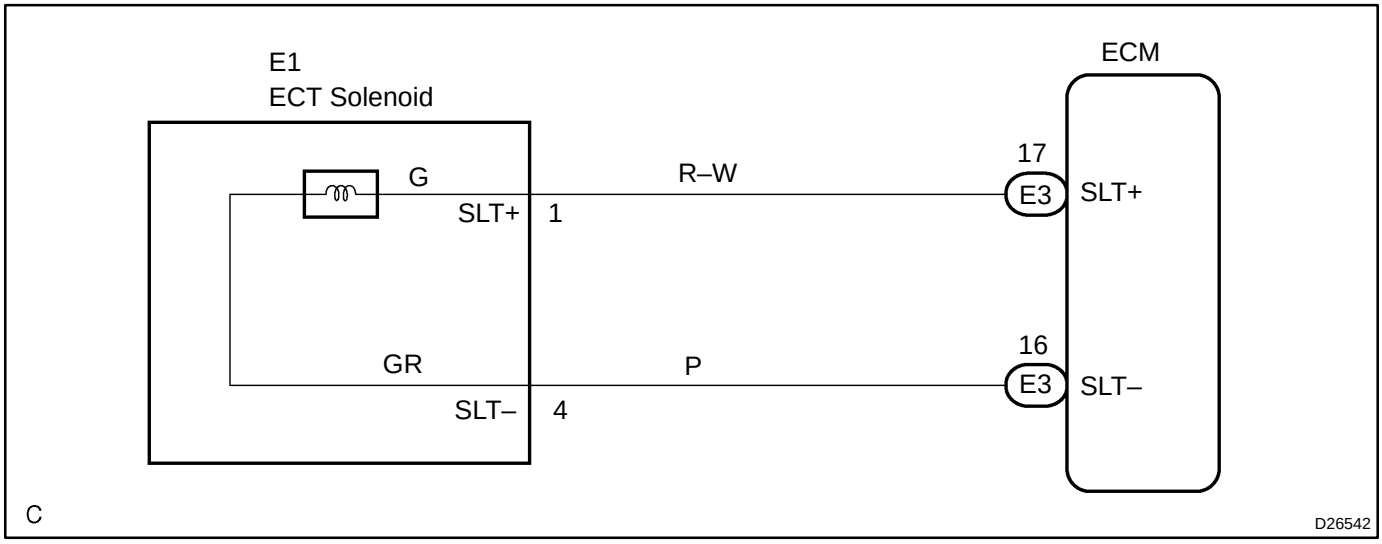

INSPECTION PROCEDURE

1 INSPECT TRANSMISSION WIRE(SLT)

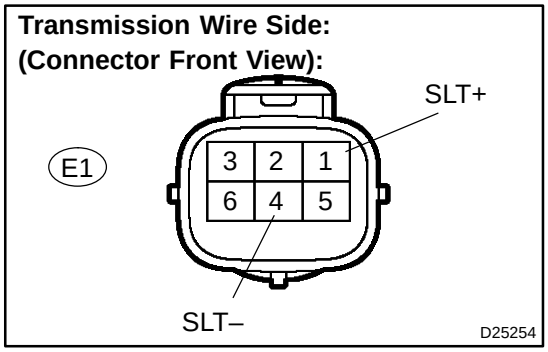

(a) Disconnect the transmission wire connector from the transaxle.

(b) Measure the resistance according to the value(s) in the table below.

Standard:

Tester Connection	Specified Condition 20 °C (68 °F)
1 (SLT+) – 4 (SLT–)	5.0 to 5.6 Ω

(c) Measure the resistance according to the value(s) in the table below.

Standard (Check for short):

Tester Connection	Specified Condition
1 (SLT+) – Body ground	10 kΩ or higher
4 (SLT–) – Body ground	

NG → **Go to step 3**

OK

2 CHECK HARNESS AND CONNECTOR(TRANSMISSION WIRE – ECM)

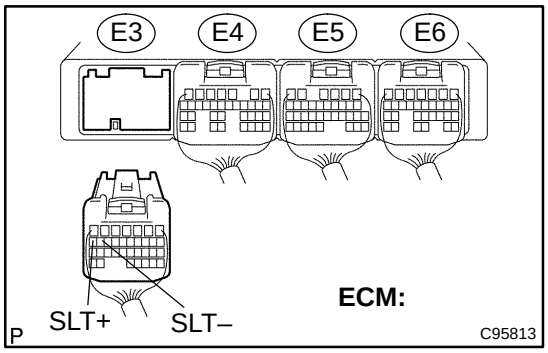

(a) Connect the transmission wire connector to the transaxle.

(b) Disconnect the ECM connector.

(c) Measure the resistance according to the value(s) in the table below.

Standard:

Tester Connection	Specified Condition 20 °C (68 °F)
E3 – 17 (SLT+) – E3 – 16 (SLT–)	5.0 to 5.6 Ω

(d) Measure the resistance according to the value(s) in the table below.

Standard (Check for short):

Tester Connection	Specified Condition
E3 – 17 (SLT+) – Body ground	10 kΩ or higher
E3 – 16 (SLT–) – Body ground	

NG → **REPAIR OR REPLACE HARNESS OR CONNECTOR (See page 01–30)**

OK

REPLACE ECM (See page 10–11)

3 INSPECT SHIFT SOLENOID VALVE(SLT)

Shift Solenoid Valve SLT:

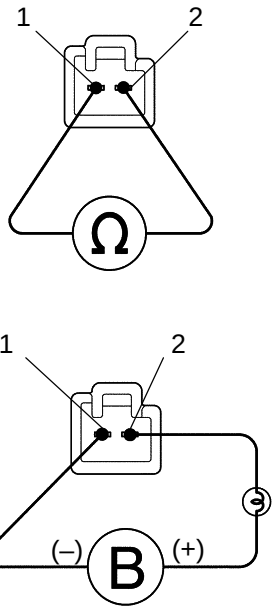

(a) Remove the shift solenoid valve (SLT).

(b) Measure the resistance according to the value(s) in the table below.

Standard:

Tester Connection	Specified Condition 20 °C (68 °F)
1 – 2	5.0 to 5.6 Ω

(c) Connect the positive (+) battery lead with a 21 W bulb to the terminal 2 of the solenoid valve connector and the negative (–) battery lead to the terminal 1 of the solenoid valve connector for checking the solenoid valve operation.

Standard:

The solenoid makes an operating noise.

NG → **REPLACE SHIFT SOLENOID VALVE(SLT)**

OK

REPAIR OR REPLACE TRANSMISSION WIRE (See page 40–27)

DTC	P2769	TORQUE CONVERTER CLUTCH SOLENOID CIRCUIT LOW (SHIFT SOLENOID VALVE SL)

DTC	P2770	TORQUE CONVERTER CLUTCH SOLENOID CIRCUIT HIGH (SHIFT SOLENOID VALVE SL)

CIRCUIT DESCRIPTION

The shift solenoid valve SL is turned ”ON” and ”OFF” by signals from the ECM in order to control the hydraulic pressure operation, the lock–up relay valve, which then the controls operation of the lock–up clutch.
Fail safe function:
If the ECM detects a malfunction, it turns the shift solenoid valve SL OFF.

DTC No.	DTC Detection Condition	Trouble Area
P2769	ECM detects short in solenoid valve SL circuit 4 times when solenoid valve SL is operated (2–trip detection logic)	• Short in shift solenoid valve SL circuit • Shift solenoid valve SL • ECM
P2770	ECM detects open in solenoid valve SL circuit 4 times when solenoid valve SL is not operated (2–trip detection logic)	• Open in shift solenoid valve SL circuit • Shift solenoid valve SL • ECM

MONITOR DESCRIPTION

Based on the signals from the Throttle Position Sensor, the Airflow Meter and the Crankshaft Position Sensor, the ECM sends a signal to the SL Solenoid Valve to regulate the hydraulic pressure and provide smoother gearshifts. The shift–solenoid valve SL responds to commands from the ECM. The valve controls the lock–up relay valve to perform the torque–converter lock–up function. If the ECM detects an open or short circuit for shift–solenoid SL, it will illuminate the MIL.

MONITOR STRATEGY

Related DTCs	P2769	Torque converter clutch solenoid/Range check (Low resistance)
	P2770	Torque converter clutch solenoid/Range check (High resistance)
Required sensors/Components	Shift solenoid valve SL	
Frequency of operation	Continuous	
Duration	0.064 sec.	
MIL operation	2 driving cycles	
Sequence of operation	None	

TYPICAL ENABLING CONDITION

Item	Specification	
	Minimum	Maximum
The monitor will run whenever the following DTCs are not present.	See page 05–369	
Range check (Low resistance)		
Solenoid	ON	
Time after solenoid OFF to ON	More than 0.008 sec.	–
Range check (High resistance)		
Solenoid	OFF	
Time after solenoid ON to OFF	More than 0.008 sec.	–

TYPICAL MALFUNCTION THRESHOLDS

Detection criteria	Threshold
Range check (Low resistance)	
Number of solenoid ON/OFF change with intelligent power MOS diagnosis signal failure (Fail at solenoid resistance ≦ 8 Ω)	4 times (0.064 sec.)
Range check (High resistance)	
Number of solenoid ON/OFF change with intelligent power MOS diagnosis signal failure (Fail at solenoid resistance ≧ 100 kΩ)	4 times (0.064 sec.)

COMPONENT OPERATING RANGE

Parameter	Standard value
Shift solenoid valve SL resistance	11 to 15 Ω at 20°C (68°F)

WIRING DIAGRAM

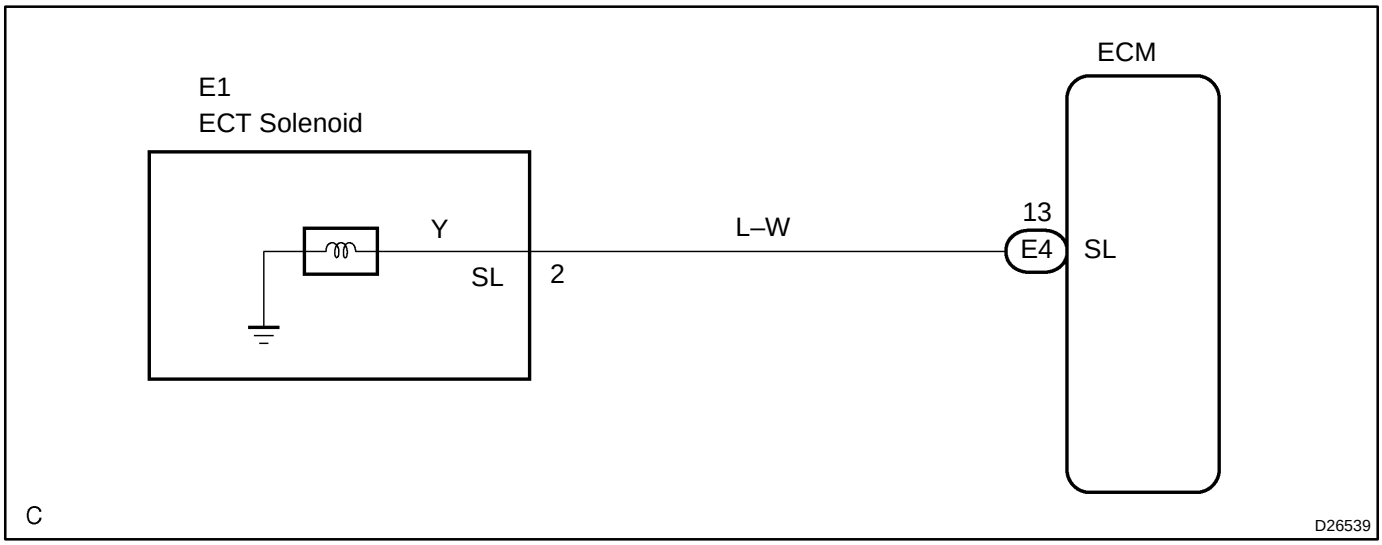

INSPECTION PROCEDURE

1 INSPECT TRANSMISSION WIRE(SL)

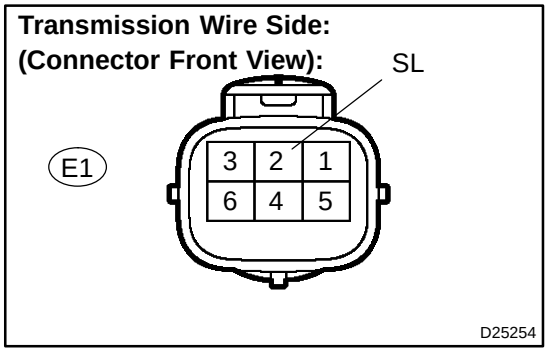

(a) Disconnect the transmission wire connector from the transaxle.

(b) Measure the resistance according to the value(s) in the table below.

Standard:

Tester Connection	Specified Condition 20 °C (68 °F)
2 – Body ground	11 to 15 Ω

NG → **Go to step 3**

OK

2 CHECK HARNESS AND CONNECTOR(TRANSMISSION WIRE – ECM)

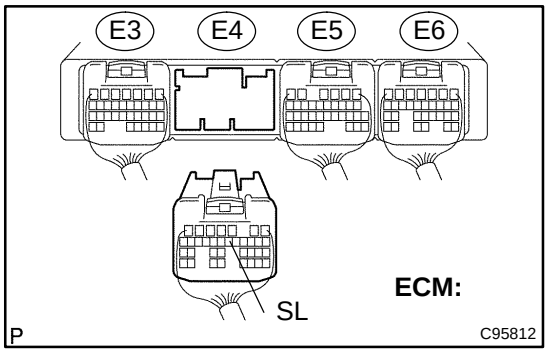

(a) Connect the transmission wire connector.

(b) Disconnect the ECM connector.

(c) Measure the resistance according to the value(s) in the table below.

Standard:

Tester Connection	Specified Condition 20 °C (68 °F)
E4 – 13 (SL) – Body ground	11 to 15 Ω

NG → **REPAIR OR REPLACE HARNESS OR CONNECTOR (See page 01–30)**

OK

REPLACE ECM (See page 10–11)

3 INSPECT SHIFT SOLENOID VALVE(SL)

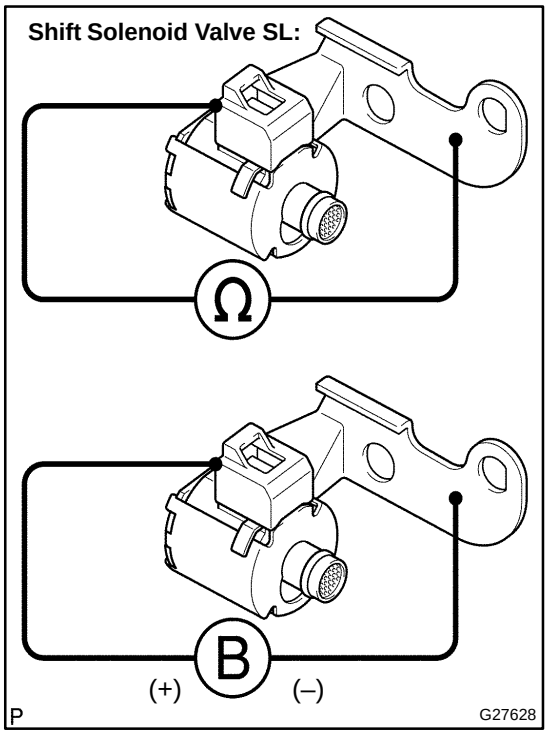

(a) Remove the shift solenoid valve SL.

(b) Measure the resistance according to the value(s) in the table below.

Standard:

Tester Connection	Specified Condition 20 °C (68 °F)
Solenoid Connector (SL) – Solenoid Body (SL)	11 to 15 Ω

(c) Connect the positive (+) battery lead to the solenoid connector terminal, and the negative (–) battery lead to the solenoid body for checking the solenoid valve operation.

Standard:

The solenoid valve makes an operating noise.

NG → **REPLACE SHIFT SOLENOID VALVE(SL)**

OK

REPAIR OR REPLACE TRANSMISSION WIRE (See page 40–27)

05DU0–01

PART AND SYSTEM NAME LIST

This reference list indicates the part names used in this manual along with their definitions.

Part and system name	Definition
Toyota HCAC system, Hydrocarbon adsorptive Catalyst (HCAC) system, HC adsorptive three–way catalyst	HC adsorptive three–way catalytic converter
Variable Valve Timing sensor, VVT sensor	Camshaft position sensor
Variable valve timing system, VVT system	Camshaft timing control system
Camshaft timing oil control valve, Oil control valve OCV, VVT, VSV	Camshaft timing oil control valve
Variable timing and lift, VVTL	Camshaft timing and lift control
Crankshaft position sensor ”A”	Crankshaft position sensor
Engine speed sensor	Crankshaft position sensor
THA	Intake air temperature
Knock control module	Engine knock control module
Knock sensor	Engine knock sensor
Mass or volume air flow circuit	Mass air flow sensor circuit
Vacuum sensor	Manifold air pressure sensor
Internal control module, Control module, Engine control ECU, PCM	Power train control module
FC idle	Deceleration fuel cut
Idle air control valve	Idle speed control
VSV for CCV, Canister close valve VSV for canister control	Evaporative emissions canister vent valve
VSV for EVAP, Vacuum switching valve assembly No. 1, EVAP VAV, Purge VSV	Evaporative emissions canister purge valve
VSV for pressure switching valve, Bypass VSV	Evaporative emission pressure switching valve
Vapor pressure sensor, EVAP pressure sensor, Evaporative emission control system pressure sensor	Fuel tank pressure sensor
Charcoal canister	Evaporative emissions canister
ORVR system	On–boad refueling vapor recovery system
Intake manifold runner control	Intake manifold tuning system
Intake manifold runner valve, IMRV, IACV (runner valve)	Intake manifold tuning valve
Intake control VSV	Intake manifold tuning solenoid valve
AFS	Air fuel ratio sensor
O2 sensor	Heater oxygen sensor
Oxygen sensor pumping current circuit	Oxygen sensor output signal
Oxygen sensor reference ground circuit	Oxygen sensor signal ground
Accel position sensor	Accelerator pedal position sensor
Throttle actuator control motor, Actuator control motor, Electronic throttle motor, Throttle control motor	Electronic throttle actuator
Electronic throttle control system, Throttle actuator control system	Electronic throttle control system
Throttle/pedal position sensor, Throttle/pedal position switch, Throttle position sensor/switch	Throttle position sensor
Turbo press sensor	Turbocharger pressure sensor
Turbo VSV	Turbocharger pressure control solenoid valve
P/S pressure switch	Power–steering pressure switch
VSV for ACM	Active control engine mount
Speed sensor, Vehicle speed sensor ”A”, Speed sensor for skid control ECU	Vehicle speed sensor
ATF temperature sensor, Trans. fluid temp. sensor, ATF temperature sensor ”A”	Transmission fluid temperature sensor
Electronic controlled automatic transmission, ECT	Electronically controlled automatic
Intermediate shaft speed sensor ”A”	Couter gear speed sensor

Part and system name	Definition
Output speed sensor	Output shaft speed sensor
Input speed sensor, Input turbine speed sensor ”A”, Speed sensor (NT), Turbine speed sensor	Input turbine speed sensor
PNP switch, NSW	Park/neutral position switch
Pressure control solenoid	Transmission pressure control solenoid
Shift solenoid	Transmission shift solenoid valve
Transmission control switch, Shift lock control unit	Shift lock control module
Engine immobilizer system, Immobilizer system	Vehicle anti–theft system

DTC P0741 TORQUE CONVERTER CLUTCH SOLENOID PERFORMANCE (SHIFT SOLENOID VALVE SL)

SYSTEM DESCRIPTION

The ECM uses the signals from the throttle position sensor, air–flow meter and crankshaft position sensor to monitor the engagement condition of the lock–up clutch.
Then the ECM compares the engagement condition of the lock–up clutch with the lock–up schedule in the ECM memory to detect mechanical trouble of the shift solenoid valve SL, valve body and torque converter clutch or automatic transaxle (clutch, brake or gear etc.).

DTC No.	DTC Detecting Condition	Trouble Area
P0741	• Lock–up does not occur when driving in the lock–up range (normal driving at 80 km/h [50 mph]), or lock–up remains ON in the lock–up OFF range. (2–trip detection logic) • When lock–up is ON, clutch or brake slips or gear is broken. (2–trip detection logic)	• Shift solenoid valve SL remains open or closed • Valve body is blocked • Shift solenoid valve SL • Lock–up clutch • Torque converter clutch • Automatic transaxle (clutch, brake or gear etc.) • ECM

MONITOR DESCRIPTION

Based on the signals from the throttle position sensor, the airflow meter and the crankshaft position sensor, the ECM sends a signal to the shift solenoid valve SL to regulate the hydraulic pressure and provide smoother gearshifts. The shift–solenoid valve SL responds to commands from the ECM. The valve controls the lock–up relay valve to perform torque–converter lock–up and flexible lock–up functions.
The ECM compares the engine rpm (NE) signal and the input speed calculated by output speed sensor (output speed) and gear ratio to detect torque converter lock–up. The ECM then compares the lock–up status against the lock–up schedule in the ECM memory. If the ECM does not detect lock–up at the appropriate time, it will conclude that there is a malfunction of shift solenoid SL. The ECM will illuminate the MIL.

MONITOR STRATEGY

Related DTCs	P0741	Torque converter clutch solenoid (SL)/Rationality check
		Torque converter clutch solenoid (SL)/OFF malfunction
		Torque converter clutch solenoid (SL)/ON malfunction
Required sensors/Components	Torque converter clutch solenoid (SL)	
Frequency of operation	Continuous	
Duration	Less than 10 sec.	
MIL operation	2 driving cycles	
Sequence of operation	None	

TYPICAL ENABLING CONDITION

Item	Specification	
	Minimum	Maximum
The monitor will run whenever the following DTCs are not present.	See page 05–369	
OFF malfunction		
IAT (only for malfunction)	–10 °C (14 °F) or more	Less than 70 °C (158 °F)
ECT	55 °C (131 °F) or more	Less than 105 °C (221 °F)
Transmission shift position	"D"	
Shift solenoid "A" (S1) circuit	Not circuit malfunction	
Shift solenoid "B" (S2) circuit	Not circuit malfunction	
Torque converter clutch solenoid (SL) circuit	Not circuit malfunction	
Battery voltage	10 V or more	–
Spark retard by KCS control	0° CA or more	–
ECM selected gear	4th with lock up	
ON malfunction		
IAT (only for malfunction)	–10 °C (14 °F) or more	Less than 70 °C (158 °F)
ECT	55 °C (131 °F) or more	Less than 105 °C (221 °F)
Transmission shift position	"D"	
Shift solenoid "A" (S1) circuit	Not circuit malfunction	
Shift solenoid "B" (S2) circuit	Not circuit malfunction	
Torque converter clutch solenoid (SL) circuit	Not circuit malfunction	
Battery voltage	10 V or more	–
Spark retard by KCS control	0° CA or more	–
ECM selected gear	4th	
Throttle valve opening angle	7 % or more	–

TYPICAL MALFUNCTION THRESHOLDS

Detection criteria	Threshold
OFF malfunction	
Engine speed	≧ 4th gear ratio x NO + 100 rpm and < 3rd gear ratio x NO – 100 rpm NO: Transmission output speed
ON malfunction	
Engine speed It is necessary 2 judgments/driving cycle 1st judgment: temporary flag ON 2nd judgment: pending fault code ON	≧ 4th gear ratio x NO – 50 rpm and < 4th gear ratio x NO + 50 rpm NO: Transmission output speed

INSPECTION PROCEDURE

1	INSPECT SHIFT SOLENOID VALVE(SL)

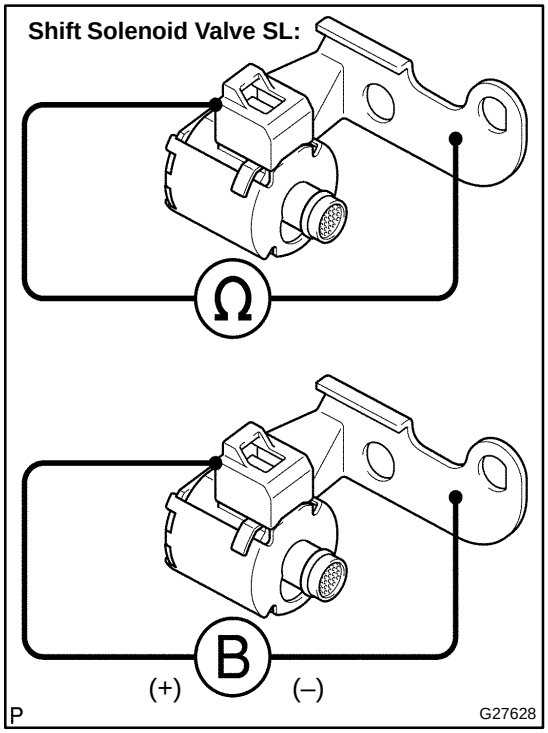

(a) Remove the shift solenoid valve SL.

(b) Measure the resistance according to the value(s) in the table below.

Standard:

Tester Connection	Specified Condition 20 °C (68 °F)
Solenoid Connector (SL) – Solenoid Body (SL)	11 to 15 Ω

(c) Connect the positive (+) battery lead to the solenoid connector terminal, and the negative (–) battery lead to the solenoid body for checking the solenoid valve operation.

Standard:

The solenoid valve makes an operating noise.

NG → **REPLACE SHIFT SOLENOID VALVE(SL)**

OK

2	INSPECT TRANSMISSION VALVE BODY ASSY(See chapter 2 in the problem symptoms table) (See page 05–374)

NG → **REPAIR OR REPLACE TRANSMISSION VALVE BODY ASSY (See page 40–23)**

OK

3	INSPECT TORQUE CONVERTER CLUTCH ASSY (See page 40–20)

NG → **REPLACE TORQUE CONVERTER CLUTCH ASSY**

OK

REPAIR AUTOMATIC TRANSAXLE ASSY (See page 40–7)

DTC P0751 SHIFT SOLENOID ”A” PERFORMANCE (SHIFT SOLENOID VALVE S1)

SYSTEM DESCRIPTION

The ECM uses signals from the vehicle speed sensor and crankshaft position sensor to detect the actual gear position (1st, 2nd, 3rd or O/D gear).
Then the ECM compares the actual gear with the shift schedule in the ECM memory to detect the mechanical trouble of the shift solenoid valves, the valve body or automatic transaxle (clutch, brake or gear etc.).

DTC No.	DTC Detecting Condition	Trouble Area
P0751	During normal driving, the gear required by the ECM does not match the actual gear (2–trip detection logic)	• Shift solenoid valve S1 remains open or closed • Valve body is blocked • Shift solenoid valve S1 • Automatic transaxle (clutch, brake or gear etc.) • ECM

MONITOR DESCRIPTION

The ECM commands gear shifts by turning the shift solenoid valves ”ON/OFF”. According to the input shaft revolution, intermediate (counter) shaft revolution and output shaft revolution, the ECM detects the actual gear position (1st, 2nd, 3rd or O/D gear position). When the gear position commanded by the ECM and the actual gear position are not same, the ECM illuminates the MIL.

MONITOR STRATEGY

Related DTCs	P0751	Shift solenoid ”A” (S1)/Rationality check
		Shift solenoid ”A” (S1)/OFF malfunction
		Shift solenoid ”A” (S1)/ON malfunction
Required sensors/Components	Shift solenoid valve S1	
Frequency of operation	Continuous	
Duration	Less than 10 sec.	
MIL operation	2 driving cycles	
Sequence of operation	None	

TYPICAL ENABLING CONDITIONS

Item	Specification	
	Minimum	Maximum
The monitor will run whenever the following DTCs are not present.	See page 05–369	
OFF malfunction (A)		
IAT (only for malfunction)	–10 °C (14 °F) or more	Less than 70 °C (158 °F)
ECT	55 °C (131 °F) or more	Less than 105 °C (221 °F)
Transmission shift position	”D”	
Shift solenoid ”A” (S1) circuit	Not circuit malfunction	
Shift solenoid ”B” (S2) circuit	Not circuit malfunction	
Torque converter clutch solenoid (SL) circuit	Not circuit malfunction	
Battery voltage	10 V or more	–
Spark retard by KCS control	0° CA or more	–
ECM selected gear	1st	
Throttle valve opening angle	30 % or more	–
OFF malfunction (B)		
IAT (only for malfunction)	–10 °C (14 °F) or more	Less than 70 °C (158 °F)
ECT	55 °C (131 °F) or more	Less than 105 °C (221 °F)

Transmission shift position	”D”	
Shift solenoid ”A” (S1) circuit	Not circuit malfunction	
Shift solenoid ”B” (S2) circuit	Not circuit malfunction	
Torque converter clutch solenoid (SL) circuit	Not circuit malfunction	
Battery voltage	10 V or more	–
Spark retard by KCS control	0° CA or more	–
Current ECM selected gear	2nd	
Last ECM selected gear	1st	
Throttle valve opening angle	7 % or more	–
Closing change of throttle valve opening angle	–5 % or more	Less than 5 %
THlast – TH current THlast: Throttle valve opening angle at last ECM selected gear THcurrent: Throttle valve opening angle at current ECM selected gear	–5 % or more	Less than 5 %
OFF malfunction (C), (D) and (E)		
IAT (only for malfunction)	–10 °C (14 °F) or more	Less than 70 °C (158 °F)
ECT	55 °C (131 °F) or more	Less than 105 °C (221 °F)
Transmission shift position	”D”	
Shift solenoid ”A” (S1) circuit	Not circuit malfunction	
Shift solenoid ”B” (S2) circuit	Not circuit malfunction	
Torque converter clutch solenoid (SL) circuit	Not circuit malfunction	
Battery voltage	10 V or more	–
Spark retard by KCS control	0° CA or more	–
Engine idling	OFF	
Braking	OFF	
ECM selected gear	2nd	
Throttle valve opening angle	7 % or more	Less than 60 %
OFF malfunction (F) and (G)		
IAT (only for malfunction)	–10 °C (14 °F) or more	Less than 70 °C (158 °F)
ECT	55 °C (131 °F) or more	Less than 105 °C (221 °F)
Transmission shift position	”D”	
Shift solenoid ”A” (S1) circuit	Not circuit malfunction	
Shift solenoid ”B” (S2) circuit	Not circuit malfunction	
Torque converter clutch solenoid (SL) circuit	Not circuit malfunction	
Battery voltage	10 V or more	–
Spark retard by KCS control	0° CA or more	–
Engine idling	OFF	
Braking	OFF	
ECM selected gear	3rd	
Throttle valve opening angle	5 % or more	Less than 60 %
OFF malfunction (H) and (I)		
IAT (only for malfunction)	–10 °C (14 °F) or more	Less than 70 °C (158 °F)
ECT	55 °C (131 °F) or more	Less than 105 °C (221 °F)
Transmission shift position	”D”	
Shift solenoid ”A” (S1) circuit	Not circuit malfunction	
Shift solenoid ”B” (S2) circuit	Not circuit malfunction	
Torque converter clutch solenoid (SL) circuit	Not circuit malfunction	
Battery voltage	10 V or more	–

Spark retard by KCS control	0° CA or more	–
Engine idling	OFF	
Braking	OFF	
ECM selected gear	4th	
Throttle valve opening angle	5 % or more	Less than 60 %
OFF malfunction (J)		
IAT (only for malfunction)	–10 °C (14 °F) or more	Less than 70 °C (158 °F)
ECT	55 °C (131 °F) or more	Less than 105 °C (221 °F)
Transmission shift position	”D”	
Shift solenoid ”A” (S1) circuit	Not circuit malfunction	
Shift solenoid ”B” (S2) circuit	Not circuit malfunction	
Torque converter clutch solenoid (SL) circuit	Not circuit malfunction	
Battery voltage	10 V or more	–
Spark retard by KCS control	0° CA or more	–
Engine idling	ON	
Braking	ON	
Throttle valve opening angle	65 % or more (ECM selected gear 2nd)	Less than 5 % (ECM selected gear 2nd)
	65 % or more (ECM selected gear 3rd)	Less than 3 % (ECM selected gear 3rd)
	65 % or more (ECM selected gear 4th)	Less than 3 % (ECM selected gear 4th)
THcurrent – TH2ndstep THcurrent: Throttle valve opening angle at current ECM selected gear TH2ndstep: Throttle valve opening angle at 2nd judgment step	Less than –10 % or 10 % or more	
Closing change of throttle valve opening angle	Less than –10 % or 10 % or more	
ON malfunction		
IAT (only for malfunction)	–10 °C (14 °F) or more	Less than 70 °C (158 °F)
ECT	55 °C (131 °F) or more	Less than 105 °C (221 °F)
Transmission shift position	”D”	
Shift solenoid ”A” (S1) circuit	Not circuit malfunction	
Shift solenoid ”B” (S2) circuit	Not circuit malfunction	
Torque converter clutch solenoid (SL) circuit	Not circuit malfunction	
Battery voltage	10 V or more	–
Spark retard by KCS control	0° CA or more	–
ECM selected gear	4th	
Throttle valve opening angle	12 % or more	Less than 35 %

TYPICAL MALFUNCTION THRESHOLDS

Detection criteria	Threshold
OFF malfunction:	
There are 2 judgment steps/driving cycle 1st judgment step: when following conditions met, temporary flag becomes ON. OFF malfunction (A) or (B) It is necessary 2 judgments/driving cycle 2nd judgment step: when following conditions met, pending fault code becomes ON. (OFF malfunction (E) and (G) and (H)) or (OFF malfunction (C) and (D) and (F) and (I))	
OFF malfunction (A)	
Engine speed (NE)	< 2 x NO + 1,100 rpm NO: Transmission output speed
OFF malfunction (B)	
NElast – NEcurrent NElast: Engine speed at last ECM selected gear NEcurrent: Engine speed at current ECM selected gear	< 512.5 rpm at throttle valve opening angle 40 % (condition vary with throttle valve opening angle)
OFF malfunction (C)	
Engine speed (NE)	< 1st gear ratio x NO + 50 rpm NO: Transmission output speed
OFF malfunction (D)	
Engine speed (NE)	≧ 2nd gear ratio x NO + 50 rpm or < 2nd gear ratio x NO – 50 rpm NO: Transmission output speed
OFF malfunction (E) and (F)	
Engine speed (NE)	< 3rd gear ratio x NO + 50 rpm and ≧ 3rd gear ratio x NO – 50 rpm NO: Transmission output speed
OFF malfunction (G)	
Engine speed (NE)	≧ 4th gear ratio x NO + 50 rpm or < 4th gear ratio x NO – 50 rpm NO: Transmission output speed
OFF malfunction (H)	
Engine speed (NE)	≧ 3rd gear ratio x NO + 50 rpm or < 3rd gear ratio x NO – 50 rpm NO: Transmission output speed
OFF malfunction (I)	
Engine speed (NE)	< 4th gear ratio x NO + 50 rpm and ≧ 4th gear ratio x NO – 50 rpm NO: Transmission output speed
OFF malfunction (J)	
When one of following secondary parameter conditions met, 2nd judgment is stopped.	(See secondary parameters and condition)
ON malfunction:	
Engine speed (NE)	≧ 2 x NO + 1,100 rpm NO: Transmission output speed

INSPECTION PROCEDURE

1	INSPECT SHIFT SOLENOID VALVE(S1)

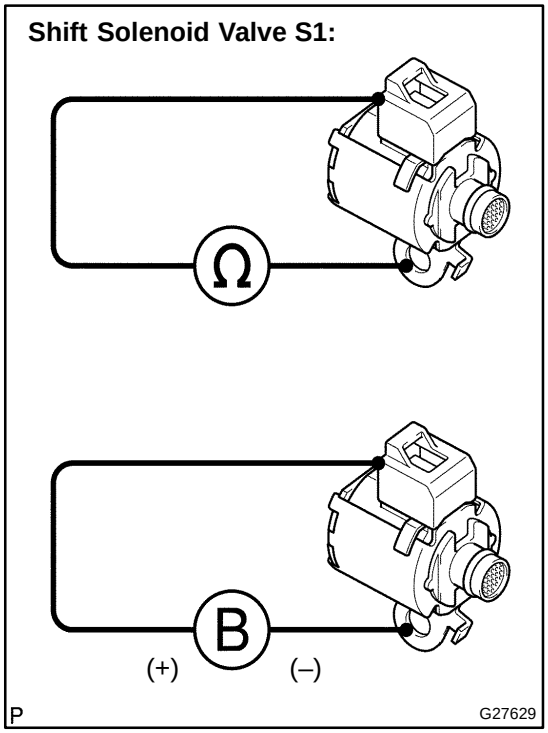

(a) Remove the shift solenoid valve S1.

(b) Measure the resistance according to the value(s) in the table below.

Standard:

Tester Connection	Specified Condition 20 °C (68 °F)
Solenoid Connector (S1) – Solenoid Body (S1)	11 to 15 Ω

(c) Connect the positive (+) battery lead to the solenoid connector terminal, and the negative (–) battery lead to the solenoid body for checking the solenoid valve operation.

Standard:

The solenoid makes an operating noise.

NG → **REPLACE SHIFT SOLENOID VALVE(S1)**

OK

2	INSPECT TRANSMISSION VALVE BODY ASSY(See chapter 2 in the problem symptoms table) (See page 05–374)

NG → **REPAIR OR REPLACE TRANSMISSION VALVE BODY ASSY (See page 40–23)**

OK

REPAIR OR REPLACE AUTOMATIC TRANSAXLE ASSY (See page 40–7)

DTC P0756 SHIFT SOLENOID ”B” PERFORMANCE (SHIFT SOLENOID VALVE S2)

SYSTEM DESCRIPTION

The ECM uses signals from the vehicle speed sensor and crankshaft position sensor to detect the actual gear position (1st, 2nd, 3rd or O/D gear).
Then the ECM compares the actual gear with the shift schedule in the ECM memory to detect the mechanical trouble of the shift solenoid valves, the valve body or automatic transaxle (clutch, brake or gear etc.).

DTC No.	DTC Detecting Condition	Trouble Area
P0756	During normal driving, the gear required by the ECM does not match the actual gear (2–trip detection logic)	• Shift solenoid valve S2 remains open or closed • Valve body is blocked • Shift solenoid valve S2 • Automatic transaxle (clutch, brake or gear etc.) • ECM

MONITOR DESCRIPTION

The ECM commands gear shifts by turning the shift solenoid valves ”ON/OFF”. According to the input shaft revolution, intermediate (counter) shaft revolution and output shaft revolution, the ECM detects the actual gear position (1st, 2nd, 3rd or O/D gear position). When the gear position commanded by the ECM and the actual gear position are not same, the ECM illuminates the MIL.

MONITOR STRATEGY

Related DTCs	P0756	Shift solenoid ”B” (S2)/Rationality check
		Shift solenoid ”B” (S2)/OFF malfunction
		Shift solenoid ”B” (S2)/ON malfunction
Required sensors/Components	Shift solenoid valve S2	
Frequency of operation	Continuous	
Duration	Less than 10 sec.	
MIL operation	2 driving cycles	
Sequence of operation	None	

TYPICAL ENABLING CONDITIONS

Item	Specification	
	Minimum	Maximum
The monitor will run whenever the following DTCs are not present.	See page 05–369	
OFF malfunction (A)		
IAT (only for malfunction)	–10 °C (14 °F) or more	Less than 70 °C (158 °F)
ECT	55 °C (131 °F) or more	Less than 105 °C (221 °F)
Transmission shift position	”D”	
Shift solenoid ”A” (S1) circuit	Not circuit malfunction	
Shift solenoid ”B” (S2) circuit	Not circuit malfunction	
Torque converter clutch solenoid (SL) circuit	Not circuit malfunction	
Battery voltage	10 V or more	–
Spark retard by KCS control	0° CA or more	–
ECM selected gear	2nd	
Throttle valve opening angle	10 % or more	Less than 35 %
OFF malfunction (B)		
IAT (only for malfunction)	–10 °C (14 °F) or more	Less than 70 °C (158 °F)
ECT	55 °C (131 °F) or more	Less than 105 °C (221 °F)

Transmission shift position	”D”	
Shift solenoid ”A” (S1) circuit	Not circuit malfunction	
Shift solenoid ”B” (S2) circuit	Not circuit malfunction	
Torque converter clutch solenoid (SL) circuit	Not circuit malfunction	
Battery voltage	10 V or more	–
Spark retard by KCS control	0° CA or more	–
Current ECM selected gear	2nd	
Last ECM selected gear	1st	
Throttle valve opening angle	7 % or more	–
THlast – TH current THlast: Throttle valve opening angle at last ECM selected gear THcurrent: Throttle valve opening angle at current ECM selected gear	–5 % or more	Less than 5 %
OFF malfunction (C), (D) and (E)		
IAT (only for malfunction)	–10 °C (14 °F) or more	Less than 70 °C (158 °F)
ECT	55 °C (131 °F) or more	Less than 105 °C (221 °F)
Transmission shift position	”D”	
Shift solenoid ”A” (S1) circuit	Not circuit malfunction	
Shift solenoid ”B” (S2) circuit	Not circuit malfunction	
Torque converter clutch solenoid (SL) circuit	Not circuit malfunction	
Battery voltage	10 V or more	–
Spark retard by KCS control	0° CA or more	–
Engine idling	OFF	
Braking	OFF	
ECM selected gear	2nd	
Throttle valve opening angle	7 % or more	Less than 60 %
OFF malfunction (F) and (G)		
IAT (only for malfunction)	–10 °C (14 °F) or more	Less than 70 °C (158 °F)
ECT	55 °C (131 °F) or more	Less than 105 °C (221 °F)
Transmission shift position	”D”	
Shift solenoid ”A” (S1) circuit	Not circuit malfunction	
Shift solenoid ”B” (S2) circuit	Not circuit malfunction	
Torque converter clutch solenoid (SL) circuit	Not circuit malfunction	
Battery voltage	10 V or more	–
Spark retard by KCS control	0° CA or more	–
Engine idling	OFF	
Braking	OFF	
ECM selected gear	3rd	
Throttle valve opening angle	5 % or more	Less than 60 %
OFF malfunction (H)		
IAT (only for malfunction)	–10 °C (14 °F) or more	Less than 70 °C (158 °F)
ECT	55 °C (131 °F) or more	Less than 105 °C (221 °F)
Transmission shift position	”D”	
Shift solenoid ”A” (S1) circuit	Not circuit malfunction	
Shift solenoid ”B” (S2) circuit	Not circuit malfunction	
Torque converter clutch solenoid (SL) circuit	Not circuit malfunction	
Battery voltage	10 V or more	–
Spark retard by KCS control	0° CA or more	–
Engine idling	OFF	

Braking	OFF	
ECM selected gear	4th	
Throttle valve opening angle	5 % or more	Less than 60 %
OFF malfunction (I)		
IAT (only for malfunction)	–10 °C (14 °F) or more	Less than 70 °C (158 °F)
ECT	55 °C (131 °F) or more	Less than 105 °C (221 °F)
Transmission shift position	”D”	
Shift solenoid ”A” (S1) circuit	Not circuit malfunction	
Shift solenoid ”B” (S2) circuit	Not circuit malfunction	
Torque converter clutch solenoid (SL) circuit	Not circuit malfunction	
Battery voltage	10 V or more	–
Spark retard by KCS control	0° CA or more	–
Engine idling	ON	
Braking	ON	
Throttle valve opening angle	65 % or more (ECM selected gear 2nd)	Less than 5 % (ECM selected gear 2nd)
	65 % or more (ECM selected gear 3rd)	Less than 3 % (ECM selected gear 3rd)
	65 % or more (ECM selected gear 4th)	Less than 3 % (ECM selected gear 4th)
THcurrent – TH2ndstep THcurrent: Throttle valve opening angle at current ECM selected gear TH2ndstep: Throttle valve opening angle at 2nd judgment step	Less than –10 % or 10 % or more	
Closing change of throttle valve opening angle	Less than –10 % or 10 % or more	
ON malfunction (A)		
IAT (only for malfunction)	–10 °C (14 °F) or more	Less than 70 °C (158 °F)
ECT	55 °C (131 °F) or more	Less than 105 °C (221 °F)
Transmission shift position	”D”	
Shift solenoid ”A” (S1) circuit	Not circuit malfunction	
Shift solenoid ”B” (S2) circuit	Not circuit malfunction	
Torque converter clutch solenoid (SL) circuit	Not circuit malfunction	
Battery voltage	10 V or more	–
Spark retard by KCS control	0° CA or more	–
ECM selected gear	4th with lock up	
ON malfunction (B)		
IAT (only for malfunction)	–10 °C (14 °F) or more	Less than 70 °C (158 °F)
ECT	55 °C (131 °F) or more	Less than 105 °C (221 °F)
Transmission shift position	”D”	
Shift solenoid ”A” (S1) circuit	Not circuit malfunction	
Shift solenoid ”B” (S2) circuit	Not circuit malfunction	
Torque converter clutch solenoid (SL) circuit	Not circuit malfunction	
Battery voltage	10 V or more	–
Spark retard by KCS control	0° CA or more	–
Current ECM selected gear	2nd	
Last ECM selected gear	1st	
Throttle valve opening angle	7 % or more	–

Closing change of throttle valve opening angle	–5 % or more	Less than 5 %
THlast – TH current THlast: Throttle valve opening angle at last ECM selected gear THcurrent: Throttle valve opening angle at current ECM selected gear	–5 % or more	Less than 5 %
ON malfunction (C), (D) and (E)		
IAT (only for malfunction)	–10 °C (14 °F) or more	Less than 70 °C (158 °F)
ECT	55 °C (131 °F) or more	Less than 105 °C (221 °F)
Transmission shift position	”D”	
Shift solenoid ”A” (S1) circuit	Not circuit malfunction	
Shift solenoid ”B” (S2) circuit	Not circuit malfunction	
Torque converter clutch solenoid (SL) circuit	Not circuit malfunction	
Battery voltage	10 V or more	–
Spark retard by KCS control	0° CA or more	–
Engine idling	OFF	
Braking	OFF	
ECM selected gear	2nd	
Throttle valve opening angle	7 % or more	Less than 60 %
ON malfunction (F)		
IAT (only for malfunction)	–10 °C (14 °F) or more	Less than 70 °C (158 °F)
ECT	55 °C (131 °F) or more	Less than 105 °C (221 °F)
Transmission shift position	”D”	
Shift solenoid ”A” (S1) circuit	Not circuit malfunction	
Shift solenoid ”B” (S2) circuit	Not circuit malfunction	
Torque converter clutch solenoid (SL) circuit	Not circuit malfunction	
Battery voltage	10 V or more	–
Spark retard by KCS control	0° CA or more	–
Engine idling	OFF	
Braking	OFF	
ECM selected gear	3rd	
Throttle valve opening angle	5 % or more	Less than 60 %
ON malfunction (G) and (H)		
IAT (only for malfunction)	–10 °C (14 °F) or more	Less than 70 °C (158 °F)
ECT	55 °C (131 °F) or more	Less than 105 °C (221 °F)
Transmission shift position	”D”	
Shift solenoid ”A” (S1) circuit	Not circuit malfunction	
Shift solenoid ”B” (S2) circuit	Not circuit malfunction	
Torque converter clutch solenoid (SL) circuit	Not circuit malfunction	
Battery voltage	10 V or more	–
Spark retard by KCS control	0° CA or more	–
Engine idling	OFF	
Braking	OFF	
ECM selected gear	4th	
Throttle valve opening angle	5 % or more	Less than 60 %
ON malfunction (I)		
IAT (only for malfunction)	–10 °C (14 °F) or more	Less than 70 °C (158 °F)
ECT	55 °C (131 °F) or more	Less than 105 °C (221 °F)
Transmission shift position	”D”	
Shift solenoid ”A” (S1) circuit	Not circuit malfunction	

Shift solenoid "B" (S2) circuit	Not circuit malfunction	
Torque converter clutch solenoid (SL) circuit	Not circuit malfunction	
Battery voltage	10 V or more	–
Spark retard by KCS control	0° CA or more	–
Engine idling	ON	
Braking	ON	
Throttle valve opening angle	65 % or more (ECM selected gear 2nd)	Less than 5 % (ECM selected gear 2nd)
	65 % or more (ECM selected gear 3rd)	Less than 3 % (ECM selected gear 3rd)
	65 % or more (ECM selected gear 4th)	Less than 3 % (ECM selected gear 4th)
THcurrent – TH2ndstep THcurrent: Throttle valve opening angle at current ECM selected gear TH2ndstep: Throttle valve opening angle at 2nd judgment step	Less than –10 % or 10 % or more	
Closing change of throttle valve opening angle	Less than –10 % or 10 % or more	

TYPICAL MALFUNCTION THRESHOLDS

Detection criteria	Threshold
OFF malfunction:	
Following conditins met (1) or (2) (1): OFF malfunction (A) (2): OFF malfunction (B), (C), (D), (E), (F), (G), (H)	
(1)	
It is necessary 2 judgment/driving cycle 1st judgment: temporary flag ON 2nd judgment: pending fault code ON	
OFF malfunction (A)	
Engine speed	≧ 1st gear ratio x NO + 0 rpm NO: Transmission output speed
(2)	
There are 2 judgments steps/driving cycle 1st judgment step: when following conditions OFF malfunction (B) met, temporary flag becomes ON. It is necessary 2 judgment/driving cycle 2nd judgment step: when following conditions met, pending fault code becomes ON. (OFF malfunction (C), (F) and (H)) or (OFF malfunction (D), (E), (G) and (H))	
OFF malfunction (B)	
NElast – NEcurrent NElast: Engine speed at last ECM selected gear NEcurrent: Engine speed at current ECM selected gear	< 512.5 rpm at throttle valve opening angle 40 % (Condition vary with throttle valve opening angle)
OFF malfunction (C)	
Engine speed	≧ 1st gear ratio x NO + 50 rpm NO: Transmission output speed
OFF malfunction (D)	
Engine speed	≧ 2nd gear ratio x NO + 50 rpm or < 2nd gear ratio x NO – 50 rpm NO: Transmission output speed

OFF malfunction (E) and (F)	
Engine speed	≧ 3rd gear ratio x NO + 50 rpm or < 3rd gear ratio x NO – 50 rpm NO: Transmission output speed
OFF malfunction (G)	
Engine speed	< 4th gear ratio x NO + 50 rpm and ≧ 4th gear ratio x NO – 50 rpm NO: Transmission output speed
OFF malfunction (H)	
Engine speed	≧ 3rd gear ratio x NO + 50 rpm or < 3rd gear ratio x NO – 50 rpm NO: Transmission output speed
OFF malfunction (I)	
When one of following secondary parameter conditions met, 2nd judgment is stopped.	(See secondary parameters and condition)
ON malfunction	
Following conditions met (1) or (2) (1): ON malfunction (A) (2): ON malfunction (B), (C), (D), (E), (F), (G), (H)	
(1)	
ON malfunction (A)	
Engine speed	≧ 3rd gear ratio x NO – 50 rpm and < 3rd gear ratio x NO + 50 rpm NO: Transmission output speed
(2)	
There are 2 judgments steps/driving cycle 1st judgment step: when following conditions ON malfunction (B) met, temporary flag becomes ON. It is necessary 2 judgments/driving cycle 2nd judgment step: when following conditions met, pending fault code becomes ON. (ON malfunction (D), (F) and (H)) or (ON malfunction (C), (E), (F) and (G))	
ON malfunction (B)	
NElast – NEcurrent NElast: Engine speed at last ECM selected gear NEcurrent: Engine speed at current ECM selected gear	< 512.5 rpm at throttle valve opening angle 40 % (Condition vary with throttle valve opening angle)
ON malfunction (C)	
Engine speed	< 1st gear ratio x NO + 50 rpm NO: Transmission output speed
ON malfunction (D)	
Engine speed	< 2nd gear ratio x NO + 50 rpm and ≧ 2nd gear ratio x NO – 50 rpm NO: Transmission output speed
ON malfunction (E)	
Engine speed	≧ 3rd gear ratio x NO + 50 rpm or < 3rd gear ratio x NO – 50 rpm NO: Transmission output speed

ON malfunction (F)	
Engine speed	≧ 4th gear ratio x NO + 50 rpm or < 4th gear ratio x NO – 50 rpm NO: Transmission output speed
ON malfunction (G)	
Engine speed	< 3rd gear ratio x NO + 50 rpm and ≧ 3rd gear ratio x NO – 50 rpm NO: Transmission output speed
ON malfunction (H)	
Engine speed	≧ 4th gear ratio x NO + 50 rpm or < 4th gear ratio x NO – 50 rpm NO: Transmission output speed
ON malfunction (I)	
When one of following secondary parameter conditions met, 2nd judgment is stopped.	(See secondary parameters and condition)

INSPECTION PROCEDURE

1	INSPECT SHIFT SOLENOID VALVE(S2)

Shift Solenoid Valve S2:

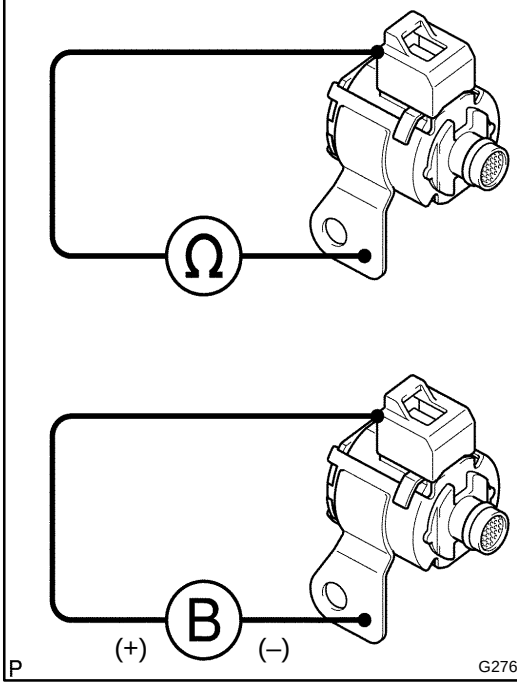

(a) Remove the shift solenoid valve S2.

(b) Measure the resistance according to the value(s) in the table below.

Standard:

Tester Connection	Specified Condition 20 °C (68 °F)
Solenoid Connector (S2) – Solenoid Body (S2)	11 to 15 Ω

(c) Connect the positive (+) battery lead to the solenoid connector terminal, and the negative (–) battery lead to the solenoid body for checking the solenoid valve operation.

Standard:

The solenoid makes an operating noise.

NG → **REPLACE SHIFT SOLENOID VALVE(S2)**

OK

2	**INSPECT TRANSMISSION VALVE BODY ASSY(See chapter 2 in the problem symptoms table) (See page 05–374)**

NG → **REPAIR OR REPLACE TRANSMISSION VALVE BODY ASSY (See page 40–23)**

OK

REPAIR OR REPLACE AUTOMATIC TRANSAXLE ASSY (See page 40–7)

DTC	P0973	SHIFT SOLENOID ”A” CONTROL CIRCUIT LOW (SHIFT SOLENOID VALVE S1)

DTC	P0974	SHIFT SOLENOID ”A” CONTROL CIRCUIT HIGH (SHIFT SOLENOID VALVE S1)

CIRCUIT DESCRIPTION

Shifting from 1st to O/D is performed in combination with ON and OFF of the shift solenoid valve S1 and S2 controlled by ECM. If an open or short circuit occurs in either of the solenoid valves, the ECM controls the remaining normal solenoid valve to allow the vehicle to be operated smoothly (Fail safe function).
Fail safe function:
If either of the solenoid valve circuits develops an open or short, the ECM turns the other solenoid valve ON and OFF to shift to the gear positions shown in the table below. If both solenoids malfunction, hydraulic control cannot be performed electronically and must be done manually.
Manual shifting as shown in the above table must be done (In the case of a short circuit, the ECM stops sending current to the short circuited solenoid).

Position	NORMAL			S1 SOLENOID VALVE MALFUNCTIONING			S2 SOLENOID VALVE MALFUNCTIONING			BOTH SOLENOID MALFUNCTIONING
	Solenoid valve		Gear	Solenoid valve		Gear	Solenoid valve		Gear	Gear when shift selector is manually operated
	S1	S2		S1	S2		S1	S2		
D	ON	OFF	1st	X	ON	3rd	ON	X	1st	O/D
	ON	ON	2nd	X	ON	3rd	OFF	X	O/D	O/D
	OFF	ON	3rd	X	ON	3rd	OFF	X	O/D	O/D
	OFF	OFF	O/D	X	OFF	O/D	OFF	X	O/D	O/D
2	ON	OFF	1st	X	ON	3rd	ON	X	1st	O/D
	ON	ON	2nd	X	ON	3rd	OFF	X	3rd	O/D
	OFF	ON	3rd	X	ON	3rd	OFF	X	3rd	O/D
L	ON	OFF	1st	X	OFF	1st	ON	X	1st	1st
	ON	ON	2nd	X	ON	2nd	ON	X	1st	1st

X: Malfunctions

DTC No.	DTC Detection Condition	Trouble Area
P0973	ECM detects short in solenoid valve S1 circuit 4 times when solenoid valve S1 is operated (1–detection logic)	• Short in shift solenoid valve S1 circuit • Shift solenoid valve S1 • ECM
P0974	ECM detects open in solenoid valve S1 circuit 4 times when solenoid valve S1 is not operated (1–detection logic)	• Open in shift solenoid valve S1 circuit • Shift solenoid valve S1 • ECM

MONITOR DESCRIPTION

The ECM commands gearshift by turning the shift solenoid valves ”ON/OFF”. When there is an open or short circuit in any shift solenoid valve circuit, the ECM detects the problem and the MIL comes on. Illuminating the MIL, the ECM performs the fail–safe and turns the other shift solenoid valves in good condition ”ON/OFF” (In case of an open or short circuit, the ECM stops sending current to the circuit.).

MONITOR STRATEGY

Related DTCs	P0973	Shift solenoid "A"/Range check (Low resistance)
	P0974	Shift solenoid "A"/Range check (High resistance)
Required sensors/Components	Shift solenoid valve S1	
Frequency of operation	Continuous	
Duration	2 times or more	
MIL operation	Immediate	
Sequence of operation	None	

TYPICAL ENABLING CONDITION

Item	Specification	
	Minimum	Maximum
The monitor will run whenever the following DTCs are not present.	See page 05–369	
Range check (Low resistance)		
Solenoid	ON	
Time after solenoid OFF to ON	More than 0.008 sec.	–
Range check (High resistance)		
Solenoid	OFF	
Time after solenoid ON to OFF	More than 0.008 sec.	–

TYPICAL MALFUNCTION THRESHOLDS

Detection criteria	Threshold
Range check (Low resistance)	
Number of solenoid ON/OFF change with intelligent power MOS diagnosis signal failure (Fail at solenoid resistance ≦ 8 Ω)	4 times (0.064 sec.)
Range check (High resistance)	
Number of solenoid ON/OFF change with intelligent power MOS diagnosis signal failure (Fail at solenoid resistance ≧ 100 kΩ)	4 times (0.064 sec.)

COMPONENT OPERATING RANGE

Parameter	Standard value
Shift solenoid valve S1 resistance	11 to 15 Ω at 20°C (68°F)

WIRING DIAGRAM

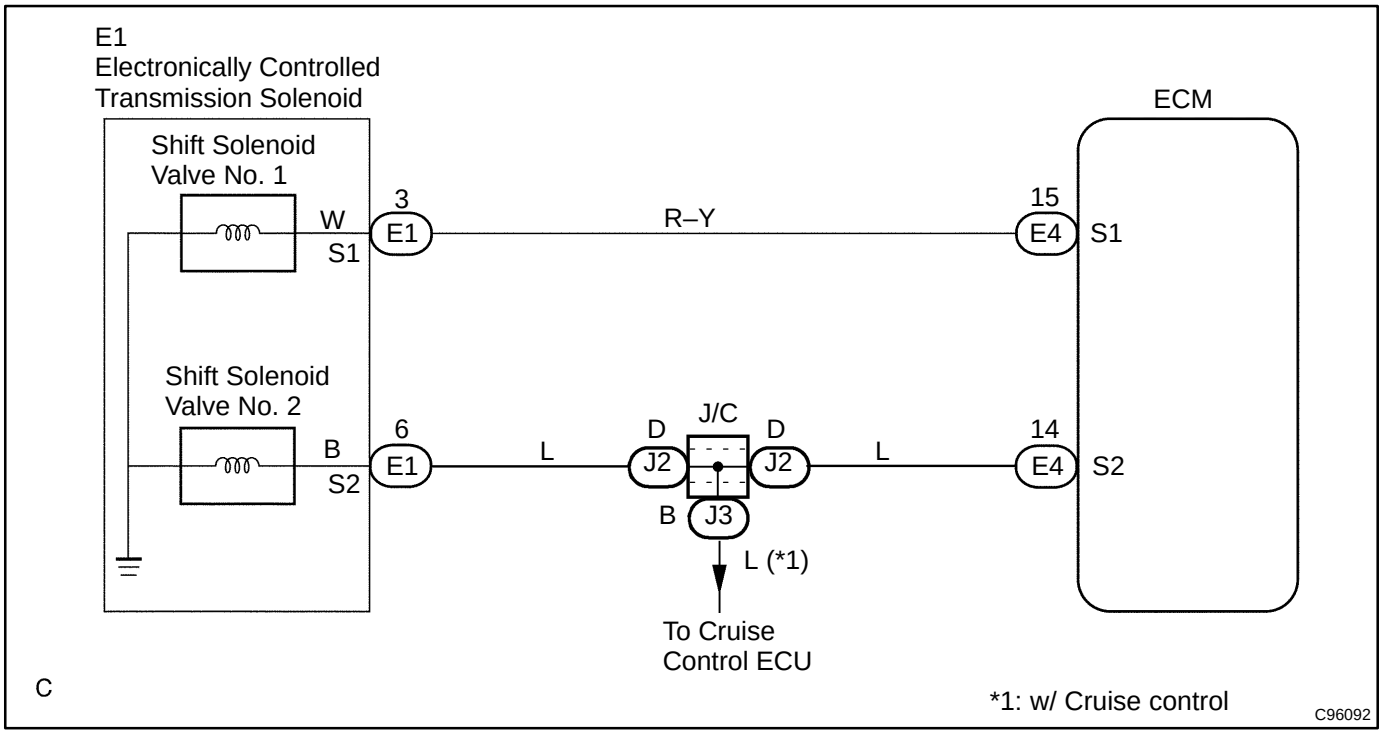

INSPECTION PROCEDURE

1	INSPECT TRANSMISSION WIRE(S1)

Transmission Wire Side:
(Connector Front View):

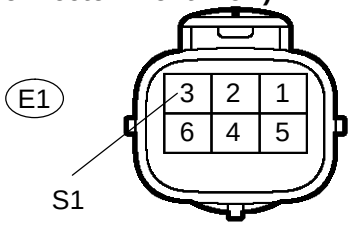

(a) Disconnect the transmission wire connector from the transaxle.

(b) Measure the resistance according to the value(s) in the table below.

Standard:

Tester Connection	Specified Condition 20 °C (68 °F)
3 – Body ground	11 to 15 Ω

NG → **Go to step 3**

OK

2 CHECK HARNESS AND CONNECTOR(TRANSMISSION WIRE – ECM)

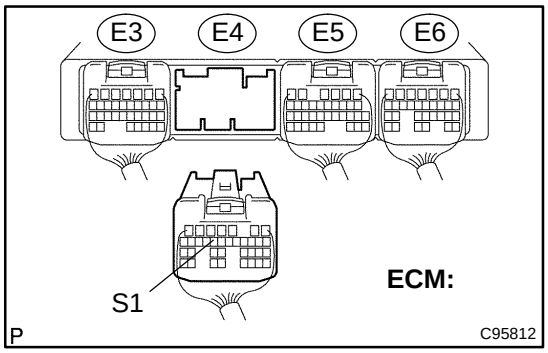

(a) Connect the transmission connector to the transaxle.
(b) Disconnect the connector from the ECM.
(c) Measure the resistance according to the value(s) in the table below.

Standard:

Tester Connection	Specified Condition 20 °C (68 °F)
E4 – 15 (S1) – Body ground	11 to 15 Ω

NG → **REPAIR OR REPLACE HARNESS OR CONNECTOR (See page 01–30)**

OK

REPLACE ECM (See page 10–11)

3 INSPECT SHIFT SOLENOID VALVE(S1)

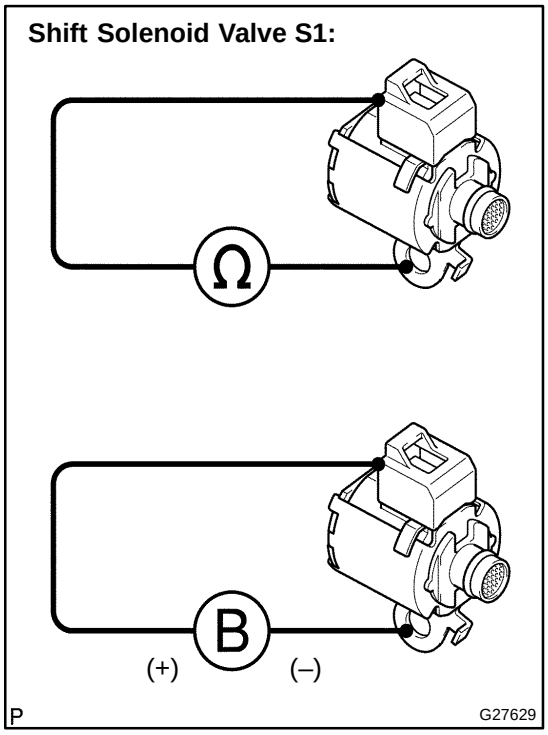

(a) Remove the shift solenoid valve S1.
(b) Measure the resistance according to the value(s) in the table below.

Standard:

Tester Connection	Specified Condition 20 °C (68 °F)
Solenoid Connector (S1) – Solenoid Body (S1)	11 to 15 Ω

(c) Connect the positive (+) battery lead to the solenoid connector terminal, and the negative (–) battery lead to the solenoid body for checking the solenoid valve operation.

Standard:

The solenoid makes an operating noise.

NG → **REPLACE SHIFT SOLENOID VALVE(S1)**

OK

REPAIR OR REPLACE TRANSMISSION WIRE (See page 40–27)

DTC	P0976	SHIFT SOLENOID ”B” CONTROL CIRCUIT LOW (SHIFT SOLENOID VALVE S2)

DTC	P0977	SHIFT SOLENOID ”B” CONTROL CIRCUIT HIGH (SHIFT SOLENOID VALVE S2)

CIRCUIT DESCRIPTION

See page 05–402.

DTC No.	DTC Detection Condition	Trouble Area
P0976	ECM detects short in solenoid valve S2 circuit 4 times when solenoid valve S2 is operated (1–trip detection logic)	• Short in shift solenoid valve S2 circuit • Shift solenoid valve S2 • ECM
P0977	ECM detects open in solenoid valve S2 circuit 4 times when solenoid valve S2 is not operated (1–trip detection logic)	• Open in shift solenoid valve S2 circuit • Shift solenoid valve S2 • ECM

MONITOR DESCRIPTION

The ECM commands gearshift by turning the shift solenoid valves ”ON/OFF”. When there is an open or short circuit in any shift solenoid valve circuit, the ECM detects the problem and the MIL comes on. Illuminating the MIL, the ECM performs the fail–safe and turns the other shift solenoid valves in good condition ”ON/OFF” (In case of an open or short circuit, the ECM stops sending current to the circuit.).

MONITOR STRATEGY

Related DTCs	P0976	Shift solenoid ”B”/Range check (Low resistance)
	P0977	Shift solenoid ”B”/Range check (High resistance)
Required sensors/Components	Shift solenoid valve S2	
Frequency of operation	Continuous	
Duration	2 times or more	
MIL operation	Immediate	
Sequence of operation	None	

TYPICAL ENABLING CONDITION

Item	Specification	
	Minimum	Maximum
The monitor will run whenever the following DTCs are not present.	See page 05–369	
Range check (Low resistance)		
Solenoid	ON	
Time after solenoid OFF to ON	More than 0.008 sec.	–
Range check (High resistance)		
Solenoid	OFF	
Time after solenoid ON to OFF	More than 0.008 sec.	–

TYPICAL MALFUNCTION THRESHOLDS

Detection criteria	Threshold
Range check (Low resistance)	
Number of solenoid ON/OFF change with intelligent power MOS diagnosis signal failure (Fail at solenoid resistance ≦ 8 Ω)	4 times (0.064 sec.)
Range check (High resistance)	
Number of solenoid ON/OFF change with intelligent power MOS diagnosis signal failure (Fail at solenoid resistance ≧ 100 kΩ)	4 times (0.064 sec.)

COMPONENT OPERATING RANGE

Parameter	Standard value
Shift solenoid valve S2 resistance	11 to 15 Ω at 20°C (68°F)

WIRING DIAGRAM

See page 05–402.

INSPECTION PROCEDURE

1 INSPECT TRANSMISSION WIRE(S2)

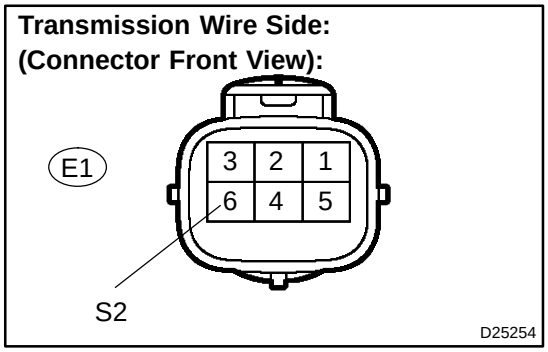

(a) Disconnect the transmission wire connector from the transaxle.

(b) Measure the resistance according to the value(s) in the table below.

Standard:

Tester Connection	Specified Condition 20 °C (68 °F)
6 – Body ground	11 to 15 Ω

NG → **Go to step 3**

OK

2 CHECK HARNESS AND CONNECTOR(TRANSMISSION WIRE – ECM)

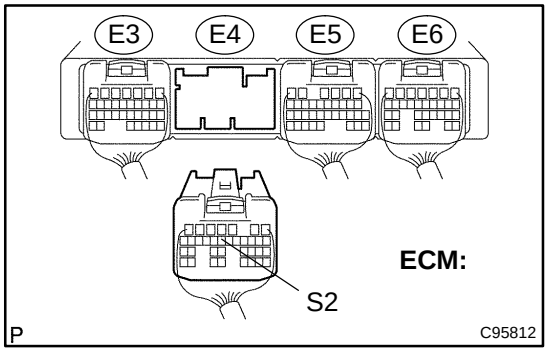

(a) Connect the transmission connector to the transaxle.

(b) Disconnect the connector from the ECM.

(c) Measure the resistance according to the value(s) in the table below.

Standard:

Tester Connection	Specified Condition 20 °C (68 °F)
E4 – 14 (S2) – Body ground	11 to 15 Ω

NG → **REPAIR OR REPLACE HARNESS OR CONNECTOR (See page 01–30)**

OK

REPLACE ECM (See page 10–11)

3 INSPECT SHIFT SOLENOID VALVE(S2)

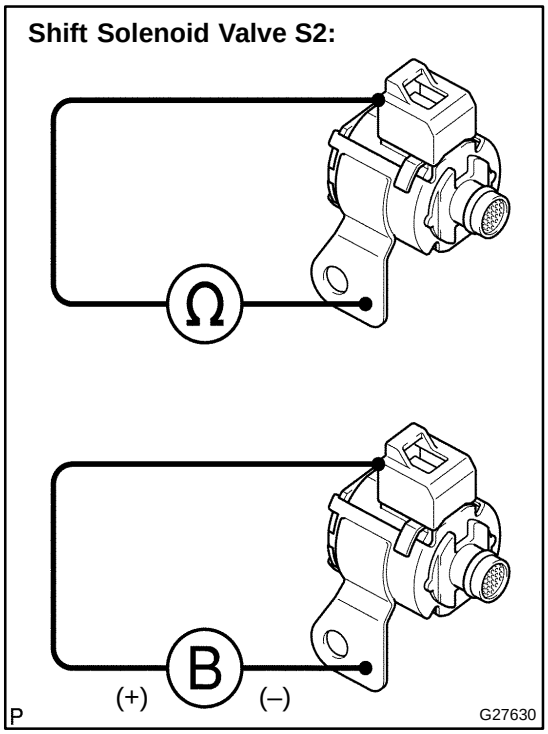

(a) Remove the shift solenoid valve S2.

(b) Measure the resistance according to the value(s) in the table below.

Standard:

Tester Connection	Specified Condition 20 °C (68 °F)
Solenoid Connector (S2) – Solenoid Body (S2)	11 to 15 Ω

(c) Connect the positive (+) battery lead to the solenoid connector terminal, and the negative (–) battery lead to the solenoid body for checking the solenoid valve operation.

Standard:

The solenoid makes an operating noise.

NG → **REPLACE SHIFT SOLENOID VALVE(S2)**

OK

REPAIR OR REPLACE TRANSMISSION WIRE (See page 40–27)

ELECTRONIC CONTROLLED AUTOMATIC TRANSAXLE [ECT] (Apr., 2003)

05C0T–05

PRECAUTION

NOTICE:

Perform the RESET MEMORY (AT initialization) when replacing the automatic transaxle assy, engine assy or ECM (See page 05–371).

HINT:

Initialization can not be completed by only removing the battery.

05DU2–01

INITIALIZATION

1. RESET MEMORY

CAUTION:

Perform the RESET MEMORY (AT initialization) when replacing the automatic transaxle assy, engine assy or ECM.

NOTICE:

Hand–held tester only

(a) Turn the ignition switch off.

(b) Connect the hand–held tester to the DLC3.

(c) Turn the ignition switch to the ON position.

(d) Perform the reset memory procedure from the ENGINE menu.

CAUTION:

After performing the RESET MEMORY, be sure to perform the ROAD TEST described earlier.

Tester menu flow:

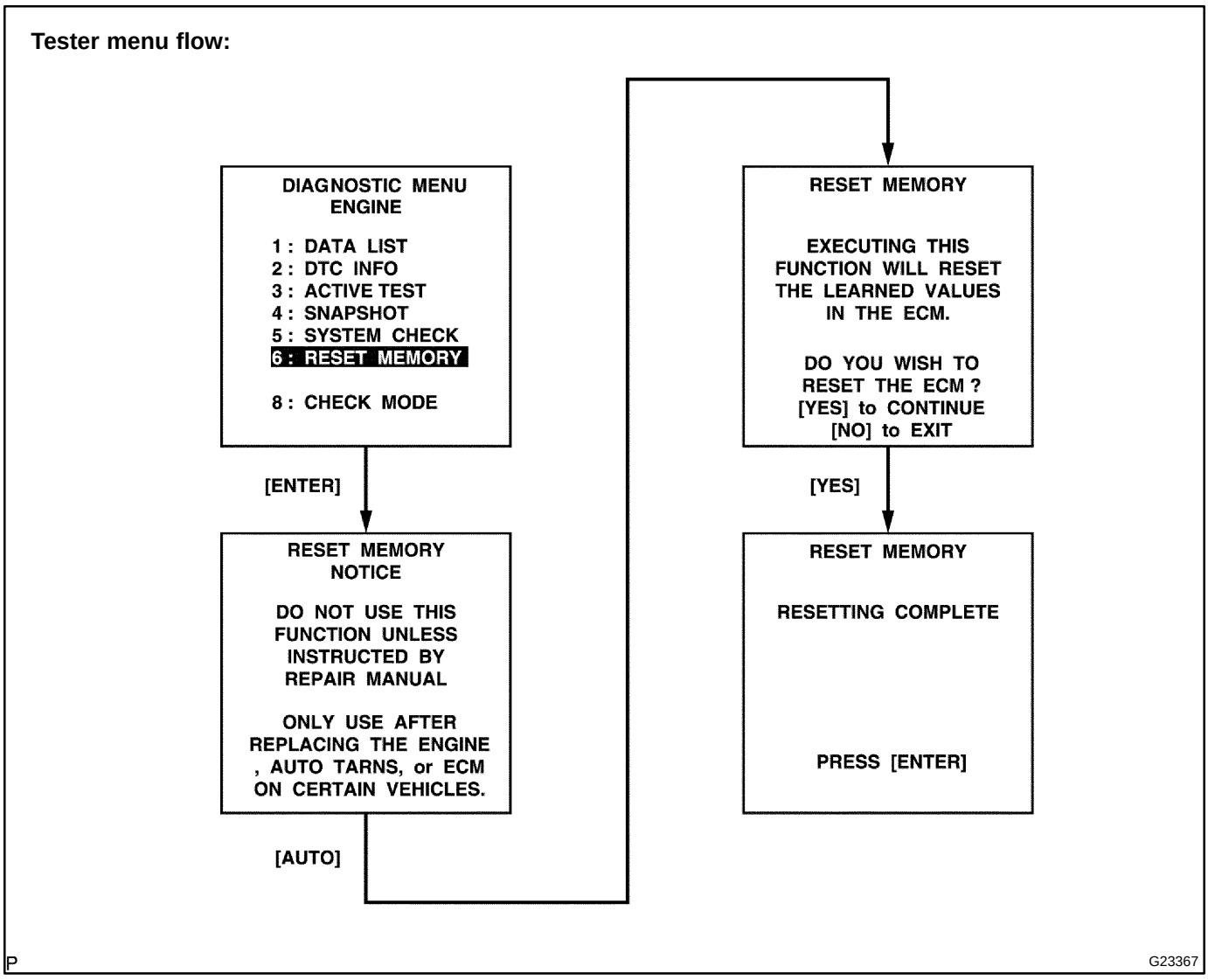

05DTT–01

ROAD TEST

1. PROBLEM SYMPTOM CONFIRMATION

(a) Taking into consideration the results of the customer problem analysis, try to reproduce the symptoms of the trouble. If the problem is that the transaxle does not shift up, shift down, or the shift point is too high or too low conduct the following road test referring to the automatic shift schedule and simulate the problem symptoms.

2. PERFORM ROAD TEST

NOTICE:

Conduct the test at normal operating ATF temperature 50 to 80 ˚C (122 to 176 ˚F).

(a) D position test

Shift into the D position and fully depress the accelerator pedal and check the following points:

(1) Check up–shift operation.

Check that 1 → 2, 2 → 3 and 3 → O/D up–shift takes place, and that the shift points conform to the automatic shift schedule (See page 03–35).

HINT:

O/D Gear Up–shift Prohibition Control

- Coolant temp. is 55 ˚C (131 ˚F) or less and vehicle speed is 70 km/h (43 mph) or less.

O/D and 3rd Gear Lock–up Prohibition Control

- Brake pedal is depressed.
- Accelerator pedal is released.
- Coolant temp. is 55 ˚C (131 ˚F) or less.

3rd Gear Lock–up Prohibition Control

- O/D main switch off (O/D ON)

(2) Check for shift shock and slip.

Check for shock and slip at the 1 → 2, 2 → 3 and 3 → O/D up–shift.

(3) Check for abnormal noises and vibration.

Run in D position lock–up or O/D gear and check for abnormal noises and vibration.

HINT:

The check for the cause of abnormal noises and vibration must be done very thoroughly as it could also be sure to loss of balance in the differential, torque converter, etc.

(4) Check kick–down operation.

Check that the possible kick–down vehicle speed limits for 2nd to 1st, 3rd to 2nd, O/D to 3rd kick–downs conform to those indicated on the automatic shift schedule while driving through all gears with the shift lever in the D position (See page 03–35).

(5) Check for abnormal shock and slip at kick–down.

(6) Check the lock–up mechanism.

- Drive in D position O/D gear, at a steady speed (lock–up ON) of about 60 km/h (37 mph).
- Lightly depress the accelerator pedal and check that the engine speed does not change abruptly.

If there is a big jump in engine speed, there is no lock–up.

(b) 2 position test

Shift into the 2 position and fully depress the accelerator pedal and check the following points:

(1) Check up–shift operation.

Check that the 1 → 2 up–shift takes place and that the shift point conforms to the automatic shift schedule (See page 03–35).

HINT:

There is no O/D up–shift and lock–up in the 2 position.

(2) Check engine braking.
While running in the 2 position and 2nd gear, release the accelerator pedal and check the engine braking effect.

(3) Check for abnormal noises during acceleration and deceleration, and for shock at up–shift and down–shift.

(c) L position test
Shift into the L position and fully depress the accelerator pedal and check the following points:

(1) Check no up–shift.
While running in the L position, check that there is no up–shift to 2nd gear.

(2) Check engine braking.
While running in the L position, release the accelerator pedal and check the engine braking effect.

(3) Check for abnormal noises during acceleration and deceleration.

(d) R position test
Shift into the R position and fully depress the accelerator pedal and check for slipping.

CAUTION:

Before conducting this test ensure that the test area is free from people and obstruction.

(e) P position test
Stop the vehicle on a grade (more than 5°), shift into the P position and release the parking brake. Check that the vehicle does not move.

0527M–18

PROBLEM SYMPTOMS TABLE

HINT:

If a normal code is displayed during the DTC check but the trouble still occurs, check the circuits for each symptom in the order given in the charts on the following pages and proceed to the page given for trouble-shooting.

The Matrix Chart is divided into 3 chapters.

- If the instruction ”Proceed to next circuit inspection shown on matrix chart” is given in the flow chart for each circuit, proceed to the circuit with the next highest number in the table to continue the check.
- If the trouble still occurs even though there are no abnormalities in any of the other circuits, then check and replace the ECM.

CHAPTER 1: ELECTRONIC CIRCUIT MATRIX CHART

Symptom	Suspect Area	See page
No up–shift (A particular gear, from 1st to 3rd gear, is not up–shifted)	ECM	01–30
No up–shift (3rd → O/D)	1. O/D main switch circuit 2. Electronically controlled transmission communication circuit *1 3. O/D cancel signal circuit *1 4. ECM	05–417 05–770 05–419 01–30
No down–shift (O/D → 3rd)	1. O/D main switch circuit 2. Electronically controlled transmission communication circuit *1 3. O/D cancel signal circuit *1 4. ECM	05–417 05–770 05–419 01–30
No down–shift (A particular gear, from 3rd to 1st gear, is not down–shifted)	ECM	01–30
No lock–up or No lock–up off	ECM	01–30
Shift point too high or too low	ECM	01–30
Up–shift to O/D from 3rd while O/D main switch is OFF	1. O/D main switch circuit 2. Electronically controlled transmission communication circuit *1 3. O/D cancel signal circuit *1 4. ECM	05–417 05–770 05–419 01–30
Up–shift to O/D from 3rd while engine is cold	ECM	01–30
Harsh engagement (N → D)	ECM	01–30
Harsh engagement (Lock–up)	ECM	01–30
Harsh engagement (Any driving position)	ECM	01–30
Poor acceleration	ECM	01–30
Engine stalls when starting off or stopping	ECM	01–30
No kick–down	ECM	01–30
Malfunction in shifting	1. Park/neutral position switch circuit 2. ECM	05–379 01–30

*1: w/ Cruise control

Chapter 2: On–vehicle repair
(★ : A245E/A246E automatic transaxle repair manual Pub. No. RM941U)

Symptom	Suspect Area	See page
Does not move in any forward ranges	Off–vehicle matrix chart	–
Does not move in reverse range	Off–vehicle matrix chart	–
Does not move in any range	1. Manual valve 2. Valve body assembly (Primary regulator valve) 3. Valve body assembly (Manual valve) 4. Off–vehicle matrix chart	★ ★ ★ –
No–up shift (1st → 2nd)	1. Valve body assembly (1 – 2 shift valve) 2. Off–vehicle matrix chart	★ –
No–up shift (2nd → 3rd)	1. Valve body assembly (2 – 3 shift valve) 2. Off–vehicle matrix chart	★ –
No–up shift (3rd → O/D)	1. Valve body assembly (3 – 4 shift valve) 2. Off–vehicle matrix chart	★ –
No–down shift (O/D → 3rd)	1. Valve body assembly (3 – 4 shift valve) 2. Off–vehicle matrix chart	★ –
No–down shift (3rd → 2nd)	1. Valve body assembly (2 – 3 shift valve) 2. Off–vehicle matrix chart	★ –
No–down shift (2nd → 1st)	1. Valve body assembly (1 – 2 shift valve) 2. Off–vehicle matrix chart	★ –
Harsh engagement (N → R)	1. Valve body assembly (C_2 accumulator) 2. Off–vehicle matrix chart	★ –
Harsh engagement (N → D)	1. Valve body assembly (C_1 accumulator) 2. Off–vehicle matrix chart	★ –
Harsh engagement (N → L)	1. Valve body assembly (C_1 accumulator) 2. Valve body assembly (Low coast modulator valve) 3. Off–vehicle matrix chart	★ ★ –
Harsh engagement (1st → 2nd ”D” range)	1. Valve body assembly (Accumulator control valve) 2. Valve body assembly (B_2 accumulator) 3. Off–vehicle matrix chart	★ ★ –
Harsh engagement (1st → 2nd ”2” range)	1. Valve body assembly (B_2 accumulator) 2. Valve body assembly (Accumulator control valve) 3. Valve body assembly (2nd coast modulator control) 4. Off–vehicle matrix chart	★ ★ ★ –
Harsh engagement (1st → 2nd → 3rd → O/D)	Valve body assembly (Primary regulator valve)	★
Harsh engagement (2nd → 3rd)	1. Valve body assembly (C_2 accumulator) 2. Valve body assembly (Accumulator control valve) 3. Off–vehicle matrix chart	★ ★ –
Harsh engagement (3rd → O/D)	1. Valve body assembly (Accumulator control valve) 2. Valve body assembly (C_3 accumulator) 3. Off–vehicle matrix chart	★ ★ –
Harsh engagement (O/D → 3rd)	1. Valve body assembly (B_4 accumulator) 2. Off–vehicle matrix chart	★ –
Harsh engagement (3rd → 2nd)	1. Valve body assembly (C_2 accumulator) 2. Off–vehicle matrix chart	★ –
Slip (Forward & Reverse)	1. Valve body assembly (Primary regulator valve) 2. Oil strainer 3. Off–vehicle matrix chart	★ 40–23 –
Slip (”R” range, 1st, 2nd, 3rd, O/D)	Off–vehicle matrix chart	–

Symptom	Suspect Area	See page
No engine braking (1st ”L” range)	1. Valve body assembly (Low coast modulator valve) 2. Off–vehicle matrix chart	★ –
No engine braking (2nd ”2” range)	1. Valve body assembly (2nd coast modulator valve) 2. Off–vehicle matrix chart	★ –
No kick down	1. Valve body assembly (1 – 2 shift valve) 2. Valve body assembly (2 – 3 shift valve) 3. Valve body assembly (3 – 4 shift valve)	★ ★ ★
Poor acceleration	1. Valve body assembly (Primary regulator valve) 2. Off–vehicle matrix chart	★ –
No lock–up	1. Valve body assembly (Lock–up relay valve) 2. Off–vehicle matrix chart	★ –

Chapter 3: Off–vehicle repair
(★ : A245E/A246E automatic transaxle repair manual Pub. No. RM941U)

Symptom	Suspect Area	See page
Does not move in any forward ranges	Forward clutch (C_1)	★
Does not move in reverse range	1. Direct clutch (C_2) 2. 1st and reverse brake (B_3) 3. U/D brake (B_4)	★ ★ ★
Does not move in any ranges	1. Torque converter clutch 2. Oil pump 3. U/D one–way clutch (F_3) 4. Front planetary gear 5. Rear planetary gear	40–20 ★ ★ ★ ★
No–up shift (1st → 2nd)	1. 2nd brake (B_2) 2. No.1 one–way clutch (F_1)	★ ★
No–up shift (2nd → 3rd)	Direct clutch (C_2)	★
No–up shift (3rd → O/D)	U/D clutch (C_3)	★
No–down shift (O/D → 3rd)	1. U/D brake (B_4) 2. U/D one–way clutch (F_3)	★ ★
No–down shift (3rd → 2nd)	No.1 one–way clutch (F_1)	★
No–down shift (2nd → 1st)	No.2 one–way clutch (F_2)	★
Harsh engagement (N → R)	1. Direct clutch (C_2) 2. 1st and reverse brake (B_3)	★ ★
Harsh engagement (N → D)	1. Forward clutch (C_1) 2. On–vehicle matrix chart	★ –
Harsh engagement (N → L)	Forward clutch (C_1)	★
Harsh engagement (1st → 2nd ”D” range)	1. 2nd brake (B_2) 2. No.1 one–way clutch (F_1)	★ ★
Harsh engagement (1st → 2nd ”2” range)	1. 2nd coast brake (B_1) 2. 2nd brake (B_2) 3. No.1 one–way clutch (F_1)	★ ★ ★
Harsh engagement (2nd → 3rd)	Direct clutch (C_2)	★
Harsh engagement (3rd → O/D)	U/D clutch (C_3)	★
Harsh engagement (O/D → 3rd)	U/D brake (B_4)	★
Harsh engagement (3rd → 2nd)	Direct clutch (C_2)	★
Slip (Forward & Reverse)	1. Torque converter clutch 2. Oil pump	40–20 ★
Slip (”R” range)	1. Direct clutch (C_2) 2. 1st and reverse brake (B_3)	★ ★
Slip (1st)	1. Forward clutch (C_1) 2. No.2 one–way clutch (F_2) 3. U/D one–way clutch (F_3)	★ ★ ★

Symptom	Suspect Area	See page
Slip (2nd)	1. Forward clutch (C_1) 2. 2nd brake (B_2) 3. No.1 one–way clutch (F_1) 4. U/D one–way clutch (F_3)	★ ★ ★ ★
Slip (3rd)	1. Forward clutch (C_1) 2. Direct clutch (C_2) 3. U/D one–way clutch (F_3)	★ ★ ★
Slip (O/D)	1. Forward clutch (C_1) 2. Direct clutch (C_2) 3. U/D clutch (C_3)	★ ★ ★
No engine braking (1st ”L” range)	1st and reverse brake (B_3)	★
No engine braking (2nd ”2” range)	2nd coast brake (B_1)	★
Poor acceleration	1. Torque converter clutch 2. Forward clutch (C_1)	40–20 ★
No lock–up	Torque converter clutch	40–20
Engine stalls when starting off or stopping	Torque converter clutch	40–20

05DTX–01

TERMINALS OF ECM

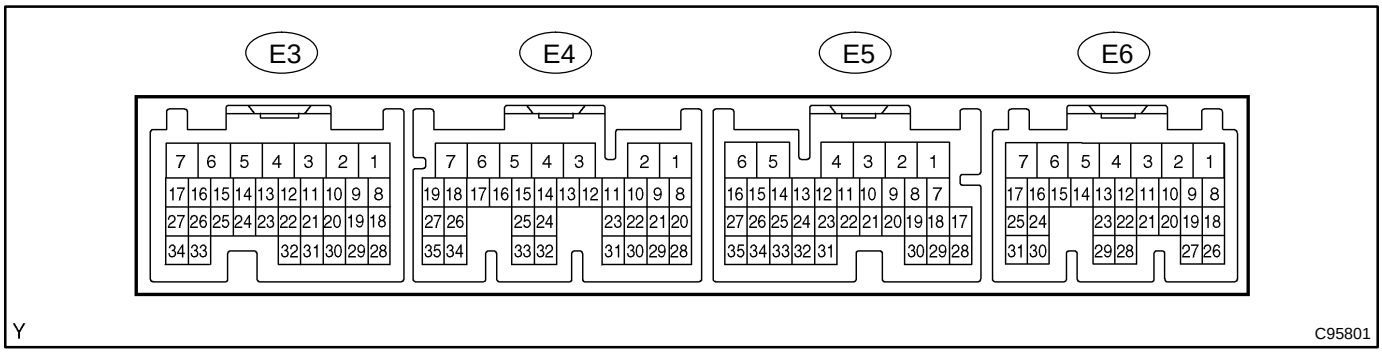

Symbols (Terminals No.)	Wiring Color	Terminal Description	Condition	Specified Condition
ODLP (E5–7) – E1 (E4–7)	LG – BR	O/D OFF indicator light circuit	IG switch ON and O/D OFF indicator light lights up	Below 3 V
			IG switch ON and O/D OFF indicator light goes off	10 to 14 V
L (E5–8) – E1 (E4–7)	LG–B – BR	L shift position switch signal	IG switch ON and shift lever L position	10 to 14 V
			IG switch ON and shift lever except L position	Below 1 V
2 (E5–9) – E1 (E4–7)	LG – BR	2 shift position switch signal	IG switch ON and shift lever 2 position	10 to 14 V
			IG switch ON and shift lever except 2 position	Below 1 V
R (E5–11) – E1 (E4–7)	R–B – BR	R shift position switch signal	IG switch ON and shift lever R position	10 to 14 V
			IG switch ON and shift lever except R position	Below 1 V
STP (E5–19) – E1 (E4–7)	G–W – BR	Stop lamp switch signal	IG switch ON and Brake pedal is depressed	7.5 to 14 V
			IG switch ON and Brake pedal is released	Below 1.5 V
SPD (E5–17) – E1 (E4–7)	V–W – BR	Speed signal	IG switch ON and rotate driving wheel slowly	Pulse generation
ODMS (E5–29) – E1 (E4–7)	LG–B – BR	O/D main switch signal	IG switch ON	10 to 14 V
			IG switch ON and press continuously O/D main switch	Below 1 V
NSW (E4–8) – E1 (E4–7)	R – BR	Park neutral switch signal	IG switch ON and shift lever P and N position	Below 1 V
			IG switch ON and shift lever except P and N position	10 to 14 V
SL (E4–13) – E1 (E4–7)	L–W – BR	SL solenoid signal	IG switch ON	Below 1 V
			Vehicle driving under lock–up range	10 to 14 V
S1 (E4–15) – E1 (E4–7)	R–Y – BR	S1 solenoid signal	IG switch ON	10 to 14 V
			1st or 2nd gear	10 to 14 V
			3rd or O/D gear	Below 1 V
S2 (E4–14) – E1 (E4–7)	L – BR	S2 solenoid signal	IG switch ON	Below 1 V
			1st or O/D gear	Below 1 V
			2nd or 3rd gear	10 to 14 V

SLT+ (E3–17) – SLT– (E3–16)	R–W – P	SLT solenoid signal	IG switch ON	10 to 14 V
OD1 (E5–18)*1 – E1 (E4–7)	R–Y*1 – BR	O/D cancel signal	IG switch ON	10 to 14 V

*1: w/ Cruise control

DTC	P0705	TRANSMISSION RANGE SENSOR CIRCUIT MALFUNCTION (PRNDL INPUT)

DTC	P0850	PARK/NEUTRAL SWITCH INPUT CIRCUIT

CIRCUIT DESCRIPTION

The park/neutral position switch detects the shift lever position and sends signals to the ECM.

DTC No.	DTC Detecting Condition	Trouble Area
P0705	2 or more switches are ON simultaneously for P, R, N, 2 and L positions (2–trip detection logic)	• Open or short in park/neutral position switch circuit • Park/neutral position switch • ECM
P0850	Park/neutral position switch remains ON (P, N position) during driving under conditions (a) and (b) for 30 sec. (2–trip detection logic) (a) Vehicle speed: 70 km/h (44 mph) or more (b) Engine speed: 1,500 – 2,500 rpm	

MONITOR DESCRIPTION

The park/neutral position switch detects the gearshift position and sends a signal to the ECM.
For security, the park/neutral position switch detects the gearshift position so that engine can be started only when the vehicle is in P or N shift position.
When the park/neutral position switch sends more than one signal at a time from switch positions P, R, N, 2, or L the ECM interprets this as a fault in the switch. The ECM will turn on the MIL.

MONITOR STRATEGY

P0705

Related DTCs	P0705	Shift lever position select switch/Verify switch input
Required sensors/Components	Park/neutral position switch	
Frequency of operation	Continuous	
Duration	0.5 sec.	
MIL operation	2 driving cycles	
Sequence of operation	None	

P0850

Related DTCs	P0850	Park/neutral position switch/Verify switch cycling
Required sensors/Components	Park/neutral position switch	
Frequency of operation	Continuous	
Duration	30 sec.	
MIL operation	2 driving cycles	
Sequence of operation	None	

TYPICAL ENABLING CONDITION

P0705

Item	Specification	
	Minimum	Maximum
The monitor will run whenever the following DTCs are not present.	See page 05–369	
The typical enabling condition is not available.	–	

P0805

Item	Specification	
	Minimum	Maximum
The monitor will run whenever the following DTCs are not present.	See page 05–369	
Vehicle speed	70 km/h (43 mph) or more	–
Engine speed	1,500 rpm or more	2,700 rpm or less
Intake air amount per revolution	0.43 g/rev. or more	–

TYPICAL MALFUNCTION THRESHOLDS

P0705

Detection criteria	Threshold
Number of the following signal input at the same time.	2 or more
Park/neutral position switch	ON
L shift position switch	ON
2 shift position switch	ON
R shift position switch	ON

P0850

Detection criteria	Threshold
PNP signal	ON

COMPONENT OPERATING RANGE

Parameter	Standard value
Park/neutral position switch	The park/neutral position switch sends only one signal to the ECM.

WIRING DIAGRAM

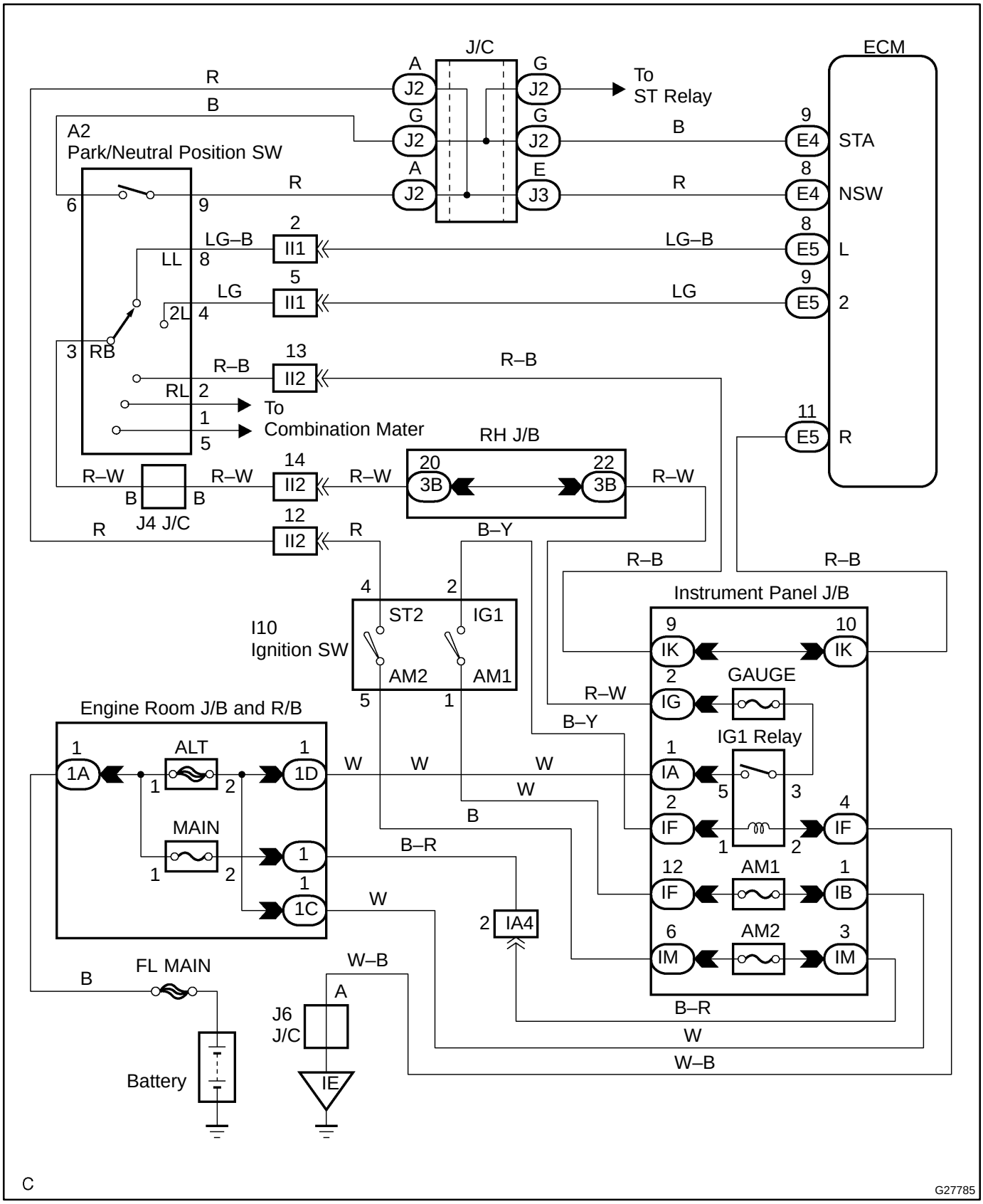

INSPECTION PROCEDURE

1 INSPECT PARK/NEUTRAL POSITION SWITCH ASSY

Switch Side:
(Connector Front View):

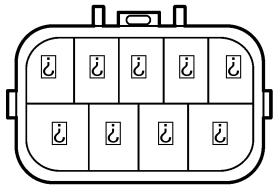

(a) Disconnect the park/neutral position switch connector.
(b) Measure resistance according to the value(s) in the table below when the shift lever is moved to each position.

Standard:

Shift Position	Tester Connection	Specified Condition
P	1 – 3 and 6 – 9	Below 1 Ω
Except P		10 kΩ or higher
R	2 – 3	Below 1 Ω
Except R		10 kΩ or higher
N	3 – 5 and 6 – 9	Below 1 Ω
Except N		10 kΩ or higher
D	3 – 7	Below 1 Ω
Except D		10 kΩ or higher
2	3 – 4	Below 1 Ω
Except 2		10 kΩ or higher
L	3 – 8	Below 1 Ω
Except L		10 kΩ or higher

NG → **REPLACE PARK/NEUTRAL POSITION SWITCH ASSY (See page 40–3)**

OK

2	CHECK HARNESS AND CONNECTOR(PARK/NEUTRAL POSITION SWITCH – ECM)

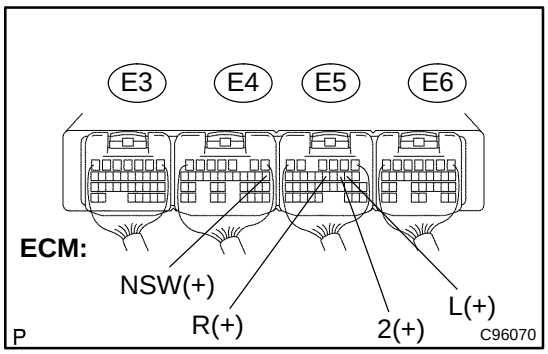

(a) Connect the the park/neutral position switch connector.
(b) Turn the ignition switch to the ON position, and measure the voltage according to the value(s) in the table below when the shift lever is moved to each position.

Standard:

Shift Position	Tester Connection	Specified condition
P and N	E4 – 8 (NSW) – Body ground	Below 1 V
Except P and N		10 to 14 V
R	E5 – 11 (R) – Body ground	10 to 14 V*
Except R		Below 1 V
2	E5 – 9 (2) – Body ground	10 to 14 V
Except 2		Below 1 V
L	E5 – 8 (L) – Body ground	10 to 14 V
Except L		Below 1 V

HINT:
*: The voltage will drop slightly due to lighting up of the back up light.

NG → **REPAIR OR REPLACE HARNESS OR CONNECTOR (See page 01–30)**

OK

REPLACE ECM (See page 10–11)

0527H–17

HOW TO PROCEED WITH TROUBLESHOOTING

The hand–held tester can be used at step 3, 4, 6, 9.

1	Vehicle Brought to Workshop

2	Customer Problem Analysis (See page 05–349)

3	Connect the OBD II scan tool or hand–held tester to DLC3

4	Check and Clear DTC and Freeze Frame Data (See page 05–353)

5	Visual Inspection

6	Setting the Check Mode Diagnosis (See page 05–354)

7	Problem Symptom Confirmation (See page 05–356)

- Symptom does not occur: Go to step 8
- Symptom occur: Go to step 9

8	Symptom Simulation (See page 01–20)

9	DTC Check (See page 05–353)

- DTC is not output: Go to step 10
- DTC is output: Go to step 18

10	Basic Inspection (See page 40–2, 40–6 and 40–44)

NG → Go to step 20

OK

11	Mechanical System Test (See page 05–358)

NG → Go to step 17

OK

12	Hydraulic Test (See page 05–360)

NG → Go to step 17

OK

13	Manual Shifting Test (See page 05–361)

NG → Go to step 15

OK

14	Problem Symptoms Table Chapter 1 (See page 05–374)

NG → Go to step 19

OK

15	Problem Symptoms Table Chapter 2 (See page 05–374)

NG → Go to step 17

OK

16	Problem Symptoms Table Chapter 3 (See page 05–374)

NG

17	Part Inspection

→ Go to step 20

18	DTC Chart (See page 05–372)

19	Circuit Inspection

20	Identification of Problem

21	Repair

22	Confirmation Test

End

THE AMBIENT TEMPERATURE DOES NOT DISPLAY

WIRING DIAGRAM

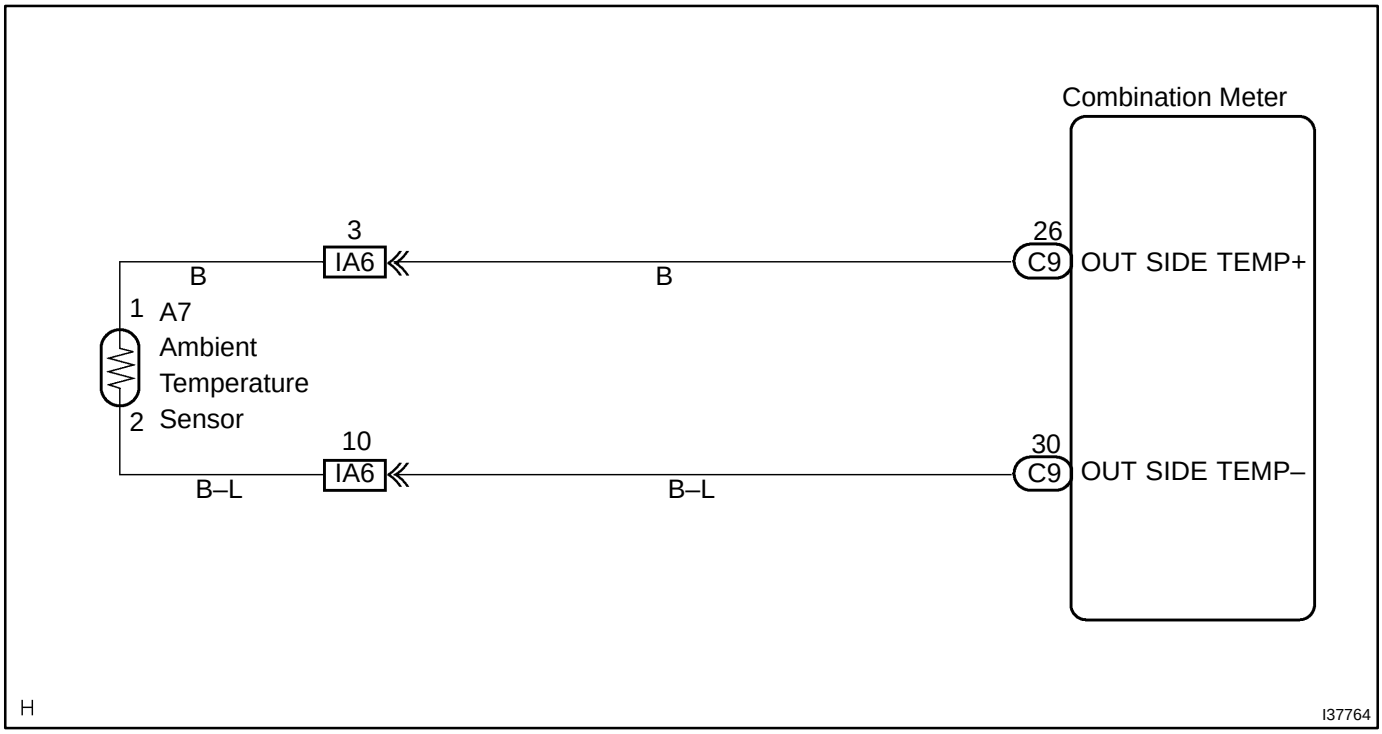

INSPECTION PROCEDURE

1	INSPECT OUTER AMBIENT TEMPERATURE SENSOR

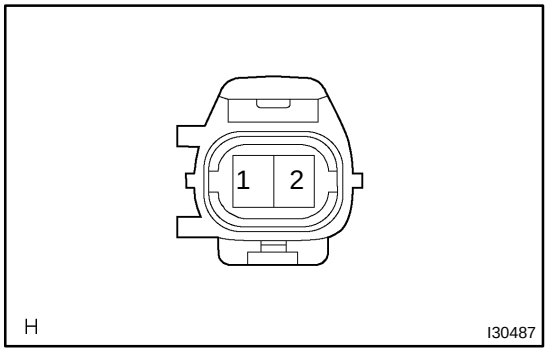

(a) Remove cooler (ambient temp. sensor) thermistor.
(b) Measure resistance between terminals 1 and 2 of cooler (ambient temp. sensor) thermistor connector at each temperature.
Resistance:
at 0 °C (0 °F) : 9.097 – 9.701 kΩ
at 25 °C (77 °F) : 2.725 – 2.865 kΩ

HINT:
As the temperature increases, the resistance decreases.
Resistance:

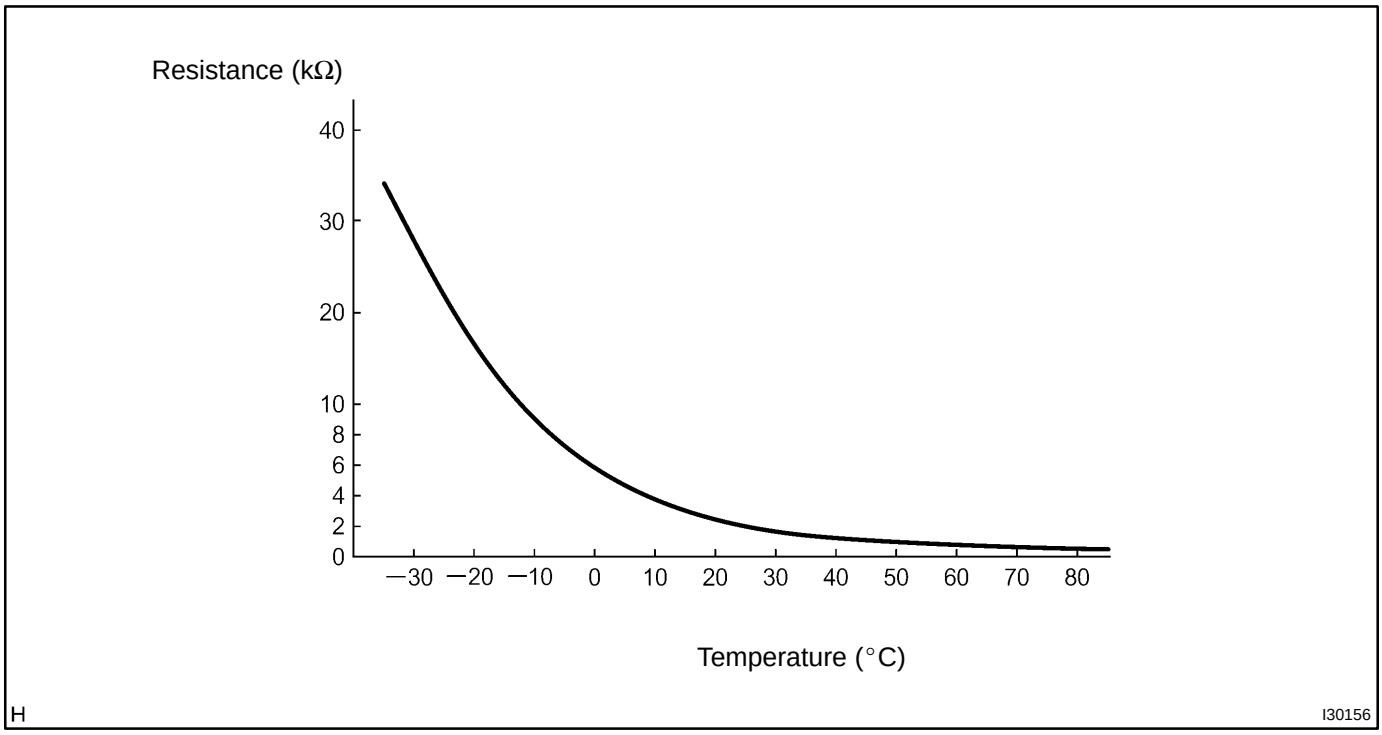

NG → **REPLACE OUTER AMBIENT TEMPERATURE SENSOR**

OK

2	CHECK HARNESS AND CONNECTOR

NG → **REPAIR OR REPLACE HARNESS OR CONNECTOR**

OK

CHECK AND REPLACE COMBINATION METER ASSY

057KB–02

CUSTOMER PROBLEM ANALYSIS CHECK

COMBINATION METER Check Sheet

Inspector's name:

Customer's Name		**Registration No.**	
		Registration Year	
		Frame No.	
Date of Vehicle Brought in	⁄ ⁄	**Odometer Reading**	**Km Mile**

Date Problem First Occurred	⁄ ⁄
How Often Problem Occurs	☐Continuous ☐ Intermittent (Times a day)
Weather	☐ Fine ☐ Cloudy ☐ Snowy ☐ Other
Temperature	**Approx.**

Problem Symptom	**Gauge**	☐ Malfunction in speedometer ☐ Malfunction in tachometer ☐ Malfunction in fuel receiver gauge ☐ Malfunction in water temperature receiver gauge
	Buzzer	☐ Key unlock warning buzzer does not sound ☐ Light auto–turn off warning buzzer does not sound ☐ Malfunction in driver's seat belt warning buzzer ☐ All buzzers do not sound

H

I30045

ENTIRE COMBINATION METER DOES NOT OPERATE

WIRING DIAGRAM

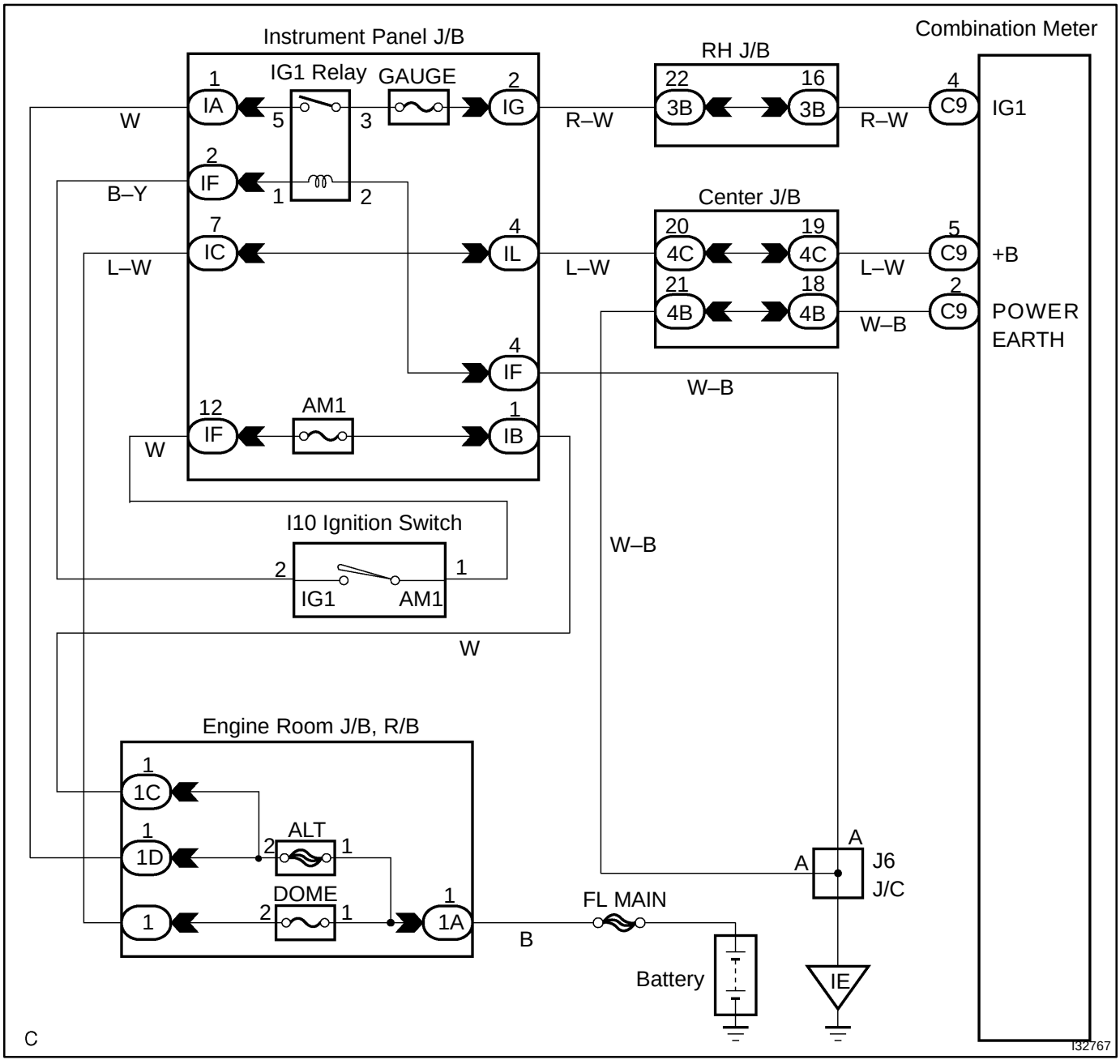

INSPECTION PROCEDERE

1	CHECK FUSE

(a) Check that continuity exists of DOME fuse.
(b) Check that continuity exists of GAUGE fuse.
(c) Check that continuity exists of AM1 fuse.

NG → REPLACE FUSE

OK

2	INSPECT COMBINATION METER ASSY

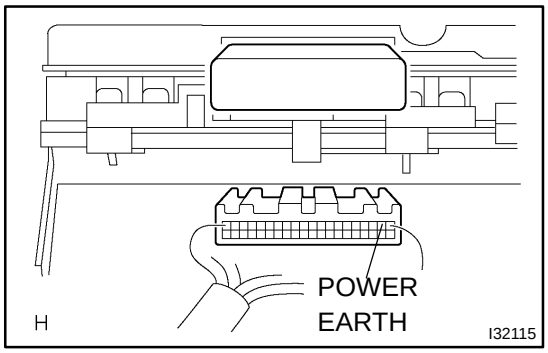

(a) Check continuity.
(1) Disconnect the ”C9” connector from combination meter assy.
(2) Check continuity between terminal C9–2 of combination meter assy connector and body ground.

OK: Continuity exists

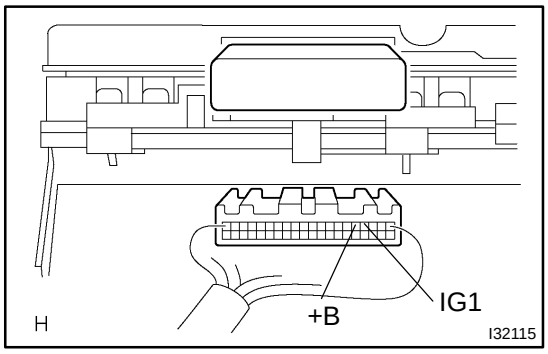

(b) Check voltage.
(1) Disconnect the ”C9” connector from combination meter assy.
(2) Measure voltage between terminal C9–5 of combination meter assy connector and body ground.

Voltage: 10 – 14 V

(3) Turn the ignition switch to ON.
(4) Measure voltage between terminal C9–4 of combination meter assy connector and body ground.

Voltage: 10 – 14 V

NG	REPAIR OR REPLACE HARNESS OR CONNECTOR

OK

CHECK AND REPLACE COMBINATION METER ASSY

057KC–02

LOCATION

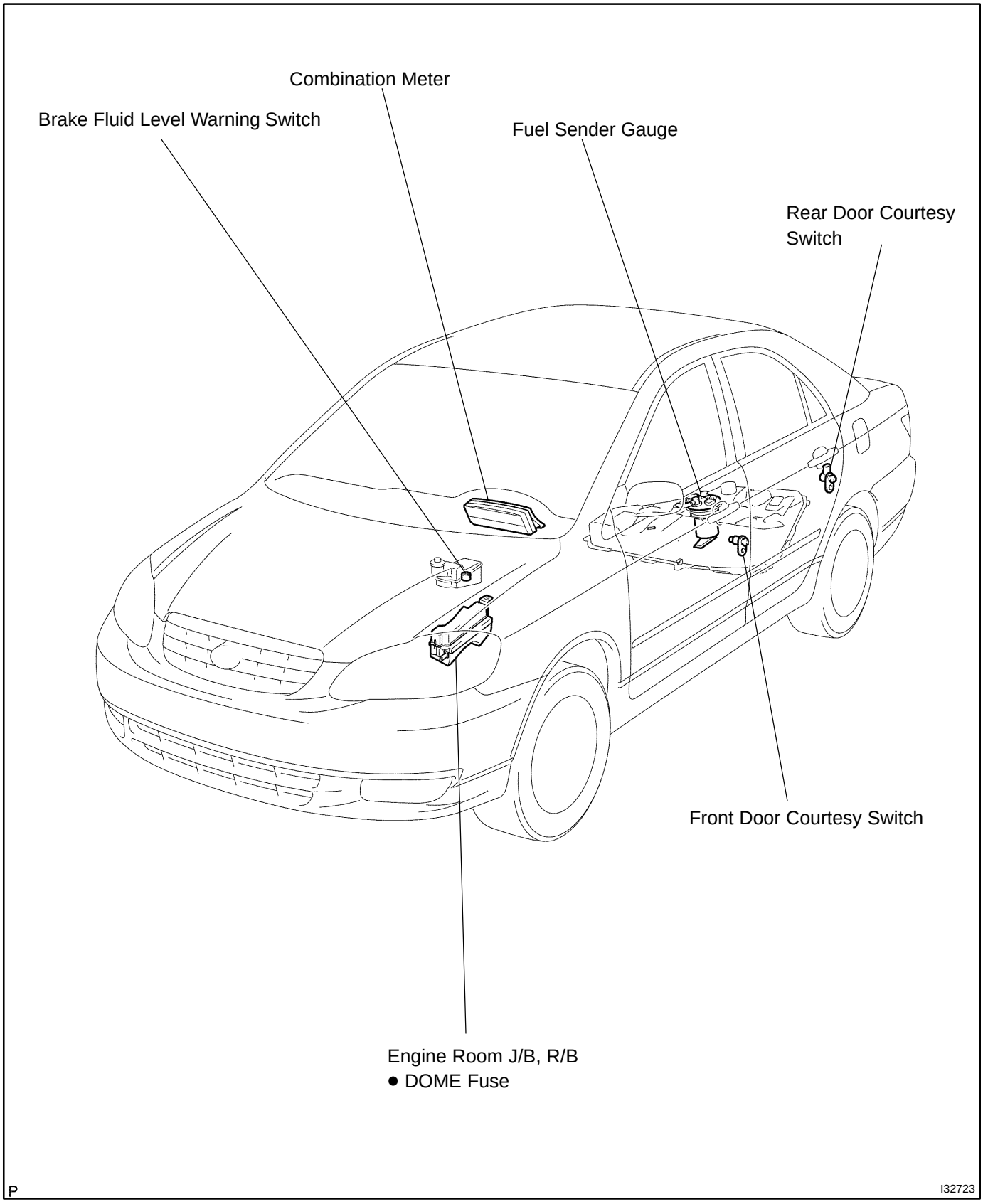

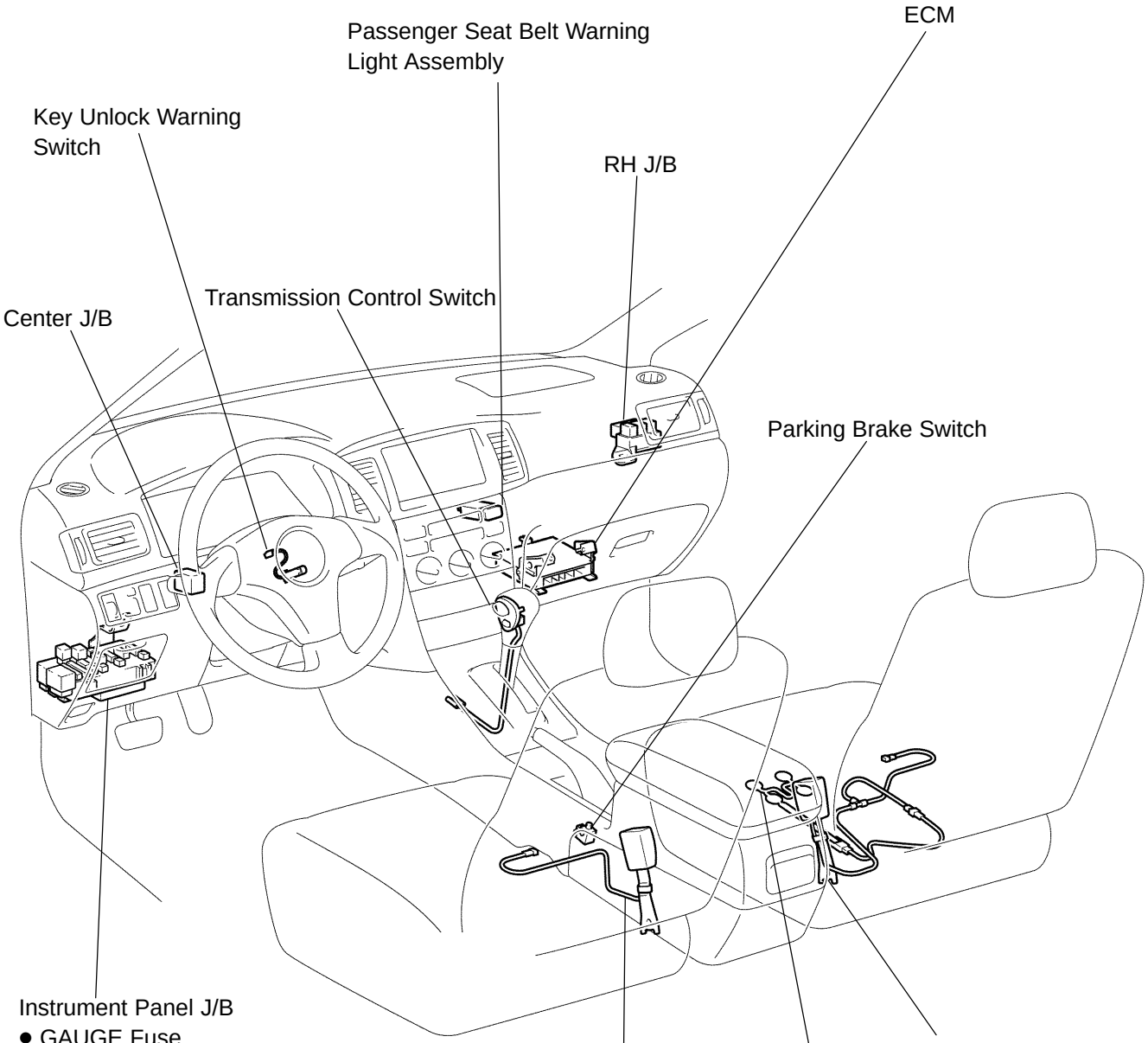
ECM
Passenger Seat Belt Warning Light Assembly
Key Unlock Warning Switch
RH J/B
Transmission Control Switch
Center J/B
Parking Brake Switch
Instrument Panel J/B
● GAUGE Fuse
● AM1 Fuse
Front Seat Belt Inner Belt (Passenger's)
Separate Type Front Seat Cushion Pad
Front Seat Belt Inner Belt (Driver's)

P I32724

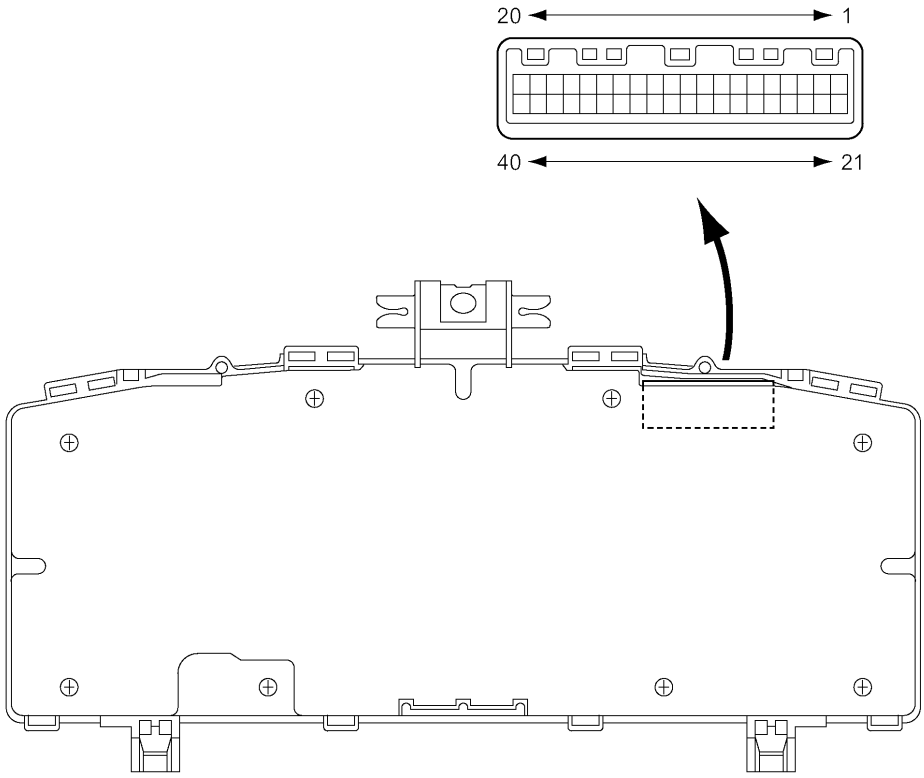

H

I30037

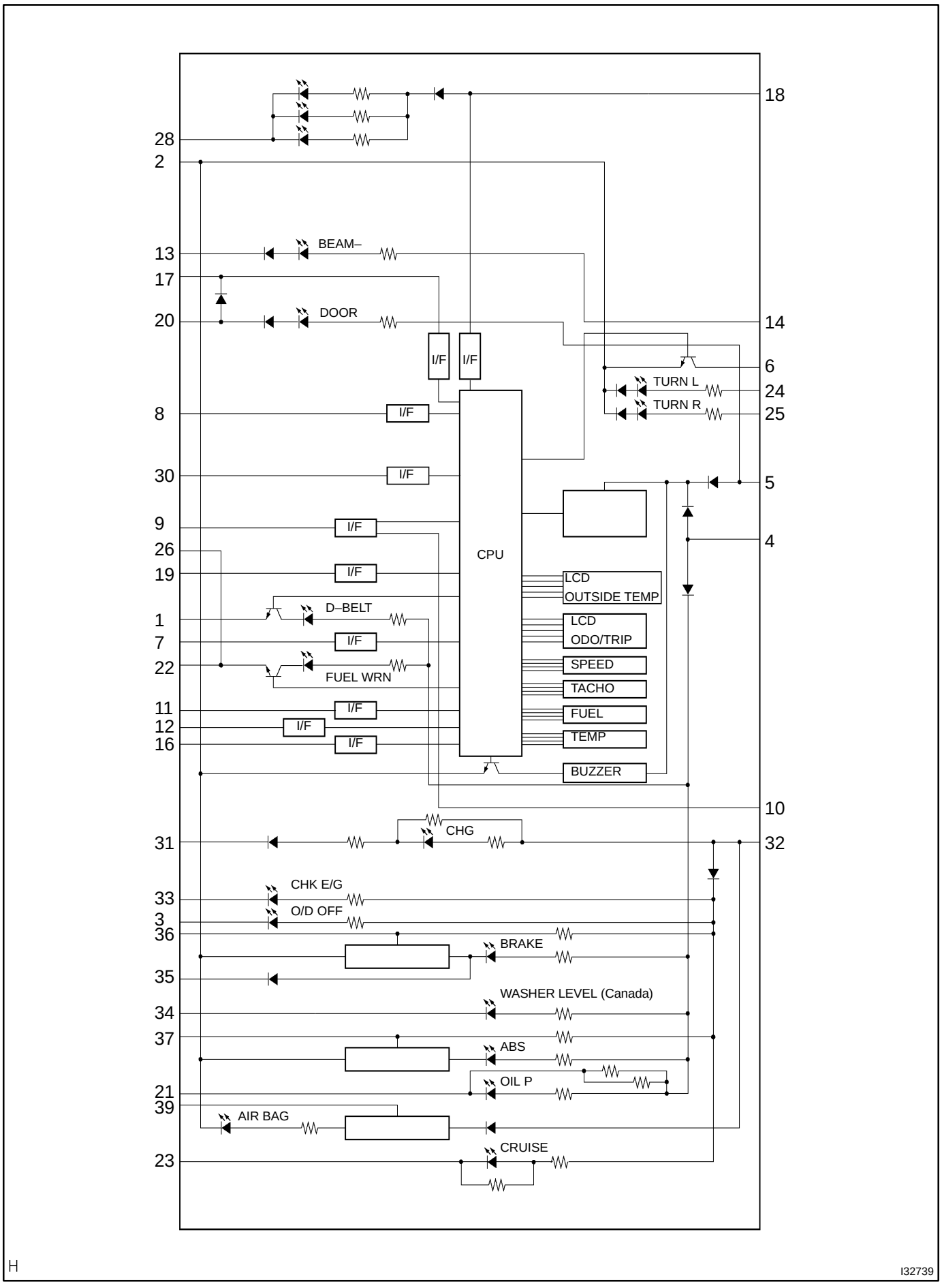
28
2
13
17
20
8
30
9
26
19
1
7
22
11
12
16
31
33
3
36
35
34
37
21
39
23
18
14
6
24
25
5
4
10
32
BEAM–
DOOR
I/F
I/F
I/F
I/F
I/F
I/F
I/F
I/F
I/F
D–BELT
FUEL WRN
CPU
TURN L
TURN R
LCD
OUTSIDE TEMP
LCD
ODO/TRIP
SPEED
TACHO
FUEL
TEMP
BUZZER
CHG
CHK E/G
O/D OFF
BRAKE
WASHER LEVEL (Canada)
ABS
OIL P
AIR BAG
CRUISE
H
I32739

Terminal No.		Wire harness side
C9	1	Ground (Signal Ground)
	2	Ground (Power Ground)
	3	ECM
	4	GAUGE Fuse
	5	DOME Fuse
	6	Front Passenger Seat Belt Warning Indicator
	7	Fuel sender gauge
	8	ECM
	9	Skid Control ECU (w/ ABS), Vehicle Speed Control Sensor (w/o ABS)
	10	Cruise Control ECU, ECM
	11	Buckle Switch RH
	12	Buckle Switch LH
	13	Ground
	14	HEAD RH UPR Fuse
	15	–
	16	Unlock Warning Switch
	17	Driver Side Courtesy Switch
	18	Tail Relay (USA), Combination Switch (Canada)
	19	ECM
	20	Except Driver Side Courtesy Switch
	21	Engine Oil Pressure Switch
	22	Fuel sender gauge
	23	Cruise Control ECU
	24	Turn Signal Flasher
	25	Turn Signal Flasher
	26	Ambient Temperature Sensor
	28	Rheostat
	30	Ambient Temperature Sensor
	31	Alternator
	32	GAUGE Fuse
	33	ECM
	34	Washer Level Sensor (Canada)
	35	Brake Fluid Level Warning Switch
	36	Skid Control ECU with Actuator (w/ ABS), Ground (w/o ABS)
	37	Skid Control ECU with Actuator (w/ ABS), Ground (w/o ABS)
	38	–
	39	Airbag Sensor Assembly
	40	–

MALFUNCTION IN CLOCK

WIRING DIAGRAM

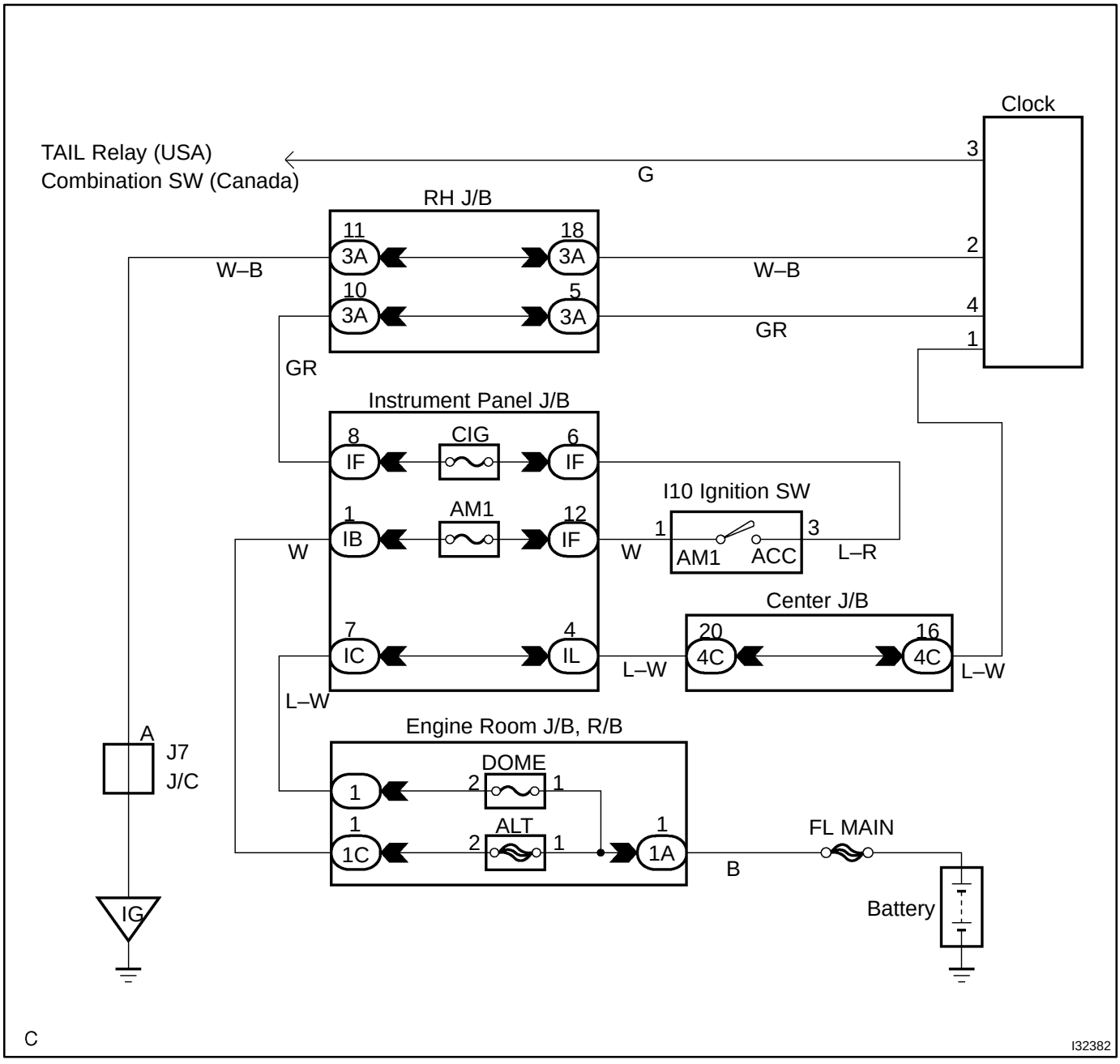

INSPECTION PROCEDURE

1	INSPECT FUSE

(a) Check the continuity in CIG fuse.
(b) Check the continuity in DOME fuse.

NG → REPLACE FUSE

OK

2	INSPECT HARNESS OR CONNECTOR

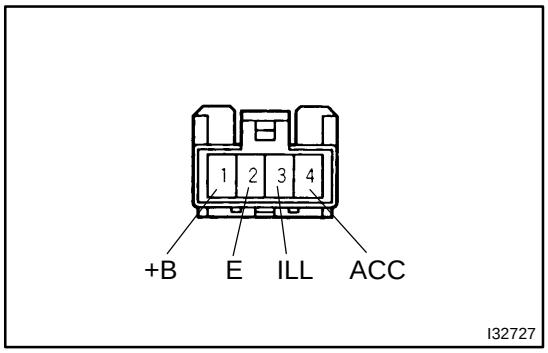

(a) Check voltage.
  (1) Remove the clock assy with connector still connected.
  (2) Measure voltage between terminal 1 (+B) of clock assy connector and body ground.
  Standard voltage: 10 – 14 V
  (3) Turn the ignition switch to ACC.
  (4) Measure voltage between terminal 4 (ACC) of clock assy connector and body ground.
  Standard voltage: 10 – 14 V

(b) Check continuity.
  (1) Check continuity Between terminal 2 (E) of clock assy connector and body ground.
  OK: Continuity exists

NG → **REPAIR OR REPLACE HARNESS OR CONNECTOR**

OK

REPLACE CLOCK ASSY

MALFUNCTION IN FUEL RECEIVER GAUGE

WIRING DIAGRAM

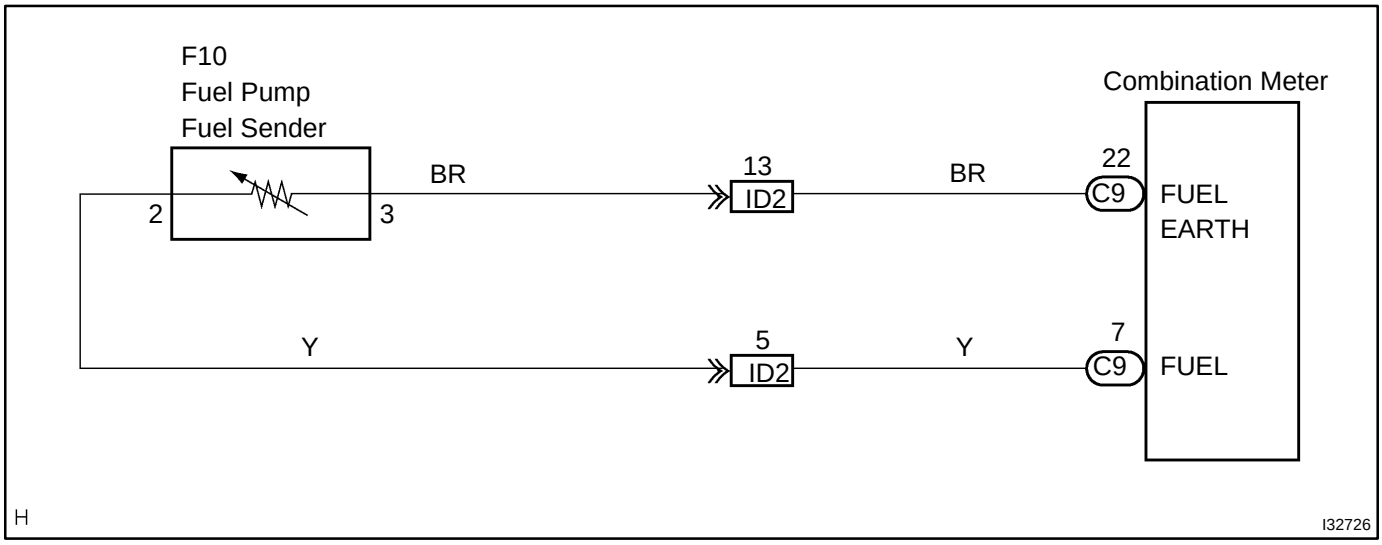

INSPECTION PROCEDERE

1	INSPECT FUEL SENDER GAGE ASSY

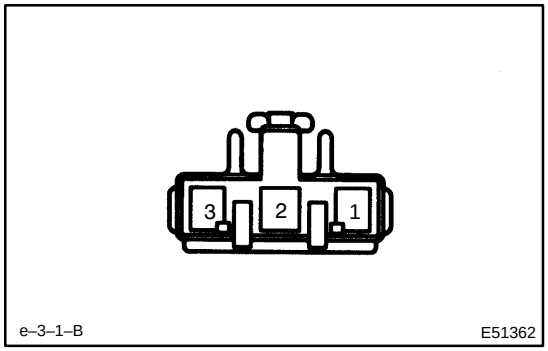

(a) Disconnect the connector fuel sender gauge.
(b) Check the float position between E and F and measure the resistance between terminals 2 and 3 of the connector. Check that the resistance value changes continuously.

Standard:

Float level	Float position mm (in.)	Resistance (Ω)
F	64.5 (2.53) ± 3 (0.12)	15.0 ± 1
1/2	11.6 (0.45) ± 3 (0.12)	54.7 ± 3
E	52.7 (2.07) ± 3 (0.12)	107.0 ± 1

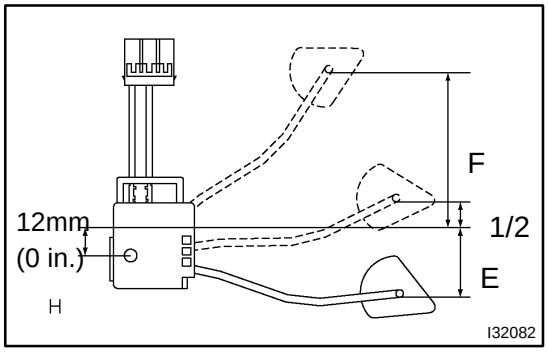

NG → **REPLACE FUEL SENDER GAGE ASSY**

OK

2	CHECK HARNESS AND CONNECTOR(BETWEEN FUEL SENDER GAGE AND COMBINATION METER ASSY)

NG → REPAIR OR REPLACE HARNESS OR CONNECTOR

OK

CHECK AND REPLACE COMBINATION METER ASSY

MALFUNCTION IN SPEEDOMETER

WIRING DIAGRAM

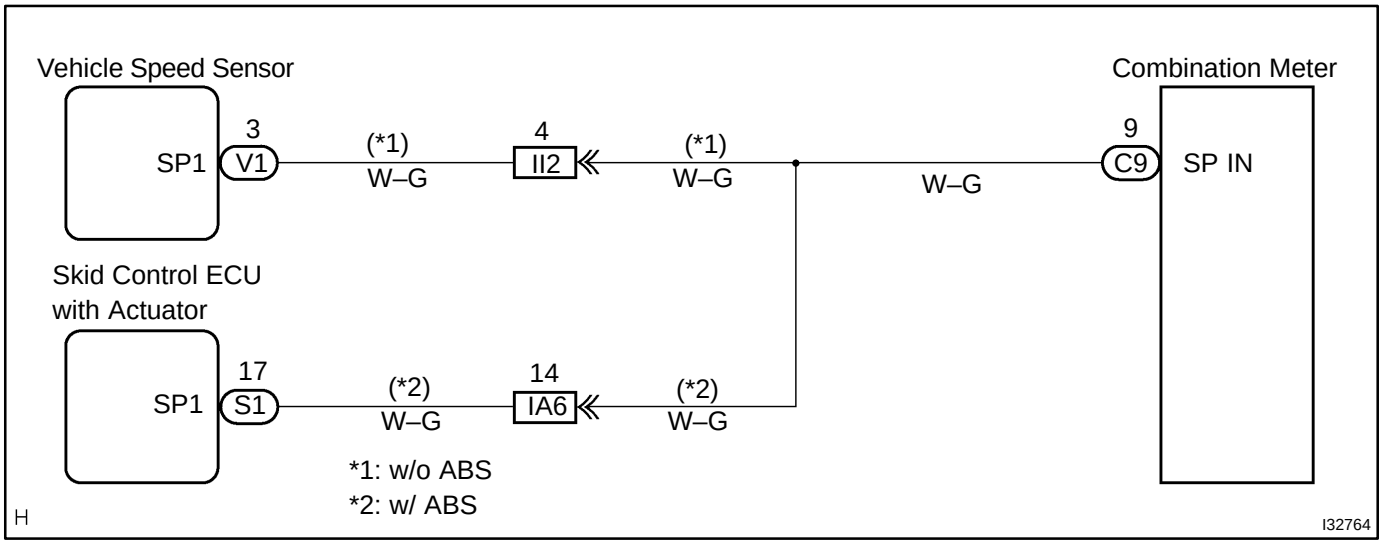

INSPECTION PROCEDURE

1	CHECK COMBINATION METER ASSY

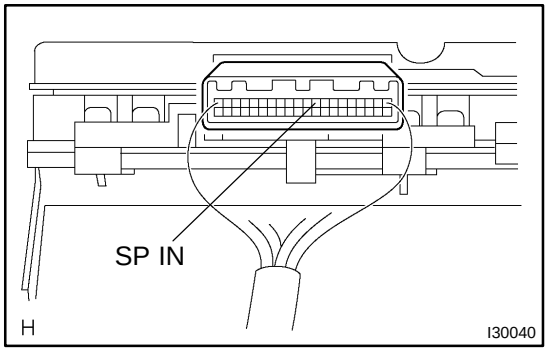

(a) Remove the combination meter assy with connector still connected.

(b) Check voltage.

(1) Jack up either of the front wheels.

(2) Shift the shift lever to neutral.

(3) Turn the ignition switch to ON.

(4) Measure the voltage between terminals C9–9 of combination meter assy and body ground when front wheel is turning slowly.

Standard voltage:

Voltage is generated intermittently.

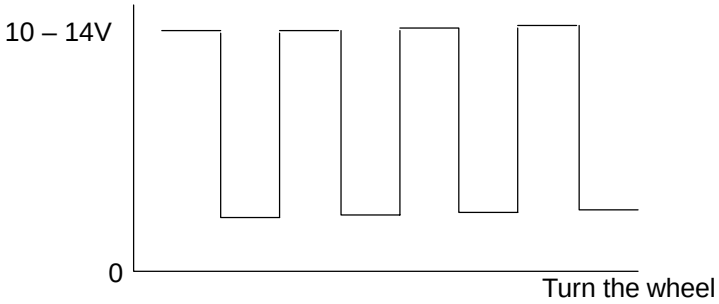

Result:

A	B	C
OK	NG (w/ ABS)	NG (w/o ABS)

B → **Go to step 2**

C → **Go to step 3**

A

CHECK AND REPLACE COMBINATION METER ASSY

2 CHECK OBD II SCAN TOOL OR HAND–HELD TESTER

(a) Check output value of skid control ECU.
   (1) Connect the hand–held tester to DLC3.
   (2) Turn the ignition switch to ON and push the hand–held tester main switch ON.
   (3) Select the DATA LIST mode on the hand–held tester.
   (4) Check that there is no difference between the speed value output from the speed sensor displayed by the hand–held tester and the speed value displayed by the speedometer when driving the vehicle.

OK: There is almost no difference from the displayed speed value.

NG → **GO TO BRAKE SYSTEM**

OK

REPAIR OR REPLACE HARNESS OR CONNECTOR

3	INSPECT SPEEDOMETER SENSOR

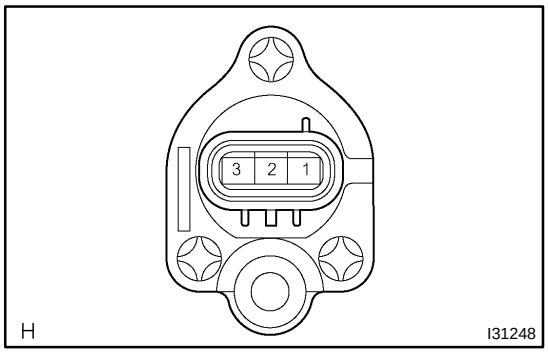

(a) Check voltage.
(1) Shift the shift lever to neutral.
(2) Jack up either of the front wheel.
(3) Turn the ignition switch to ON.
(4) Measure voltage between terminals 3 and 2 of speed sensor when the front wheel is turning slowly.

Standard voltage:

Voltage is generated intermittently.

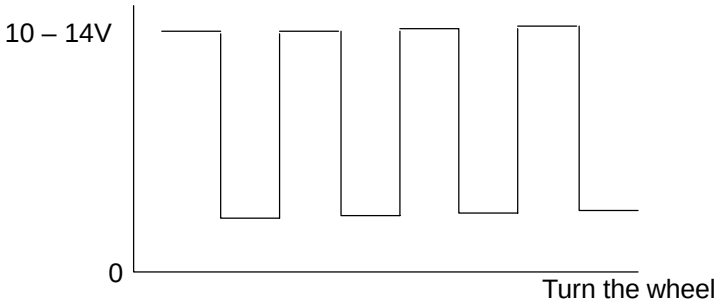

NG → **CHECK AND REPLACE SPEEDOMETER SENSOR**

OK

REPAIR OR REPLACE HARNESS OR CONNECTOR

MALFUNCTION IN TACHOMETER

WIRING DIAGRAM

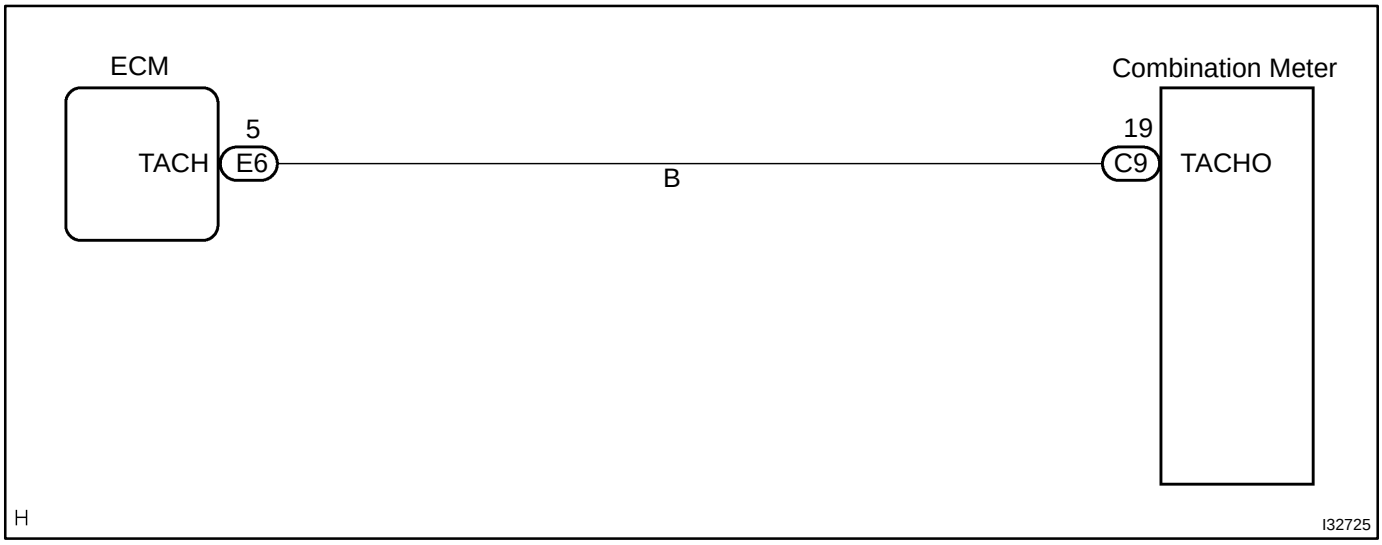

INSPECTION PROCEDURE

1	READ VALUE OF HAND–HELD TESTER

(a) Check output value of ECM.
  (1) Connect the hand–held tester to DLC3.
  (2) Turn the ignition switch to ON and push the hand–held tester main switch ON.
  (3) Select the DATA LIST mode on the hand–held tester.

Item	Condition	Specified Condition	Mesurement Item / Range (Display)
ENGINE SPD	With Engine Idling	650 – 750rpm	Engine Speed / Min.: 0 rpm, Max.: 16,383rpm

NG → GO TO ENGINE CONTROL SYSTEM

OK

2	INSPECT COMBINATION METER ASSY

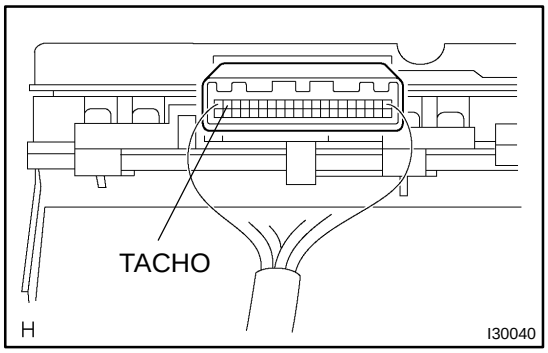

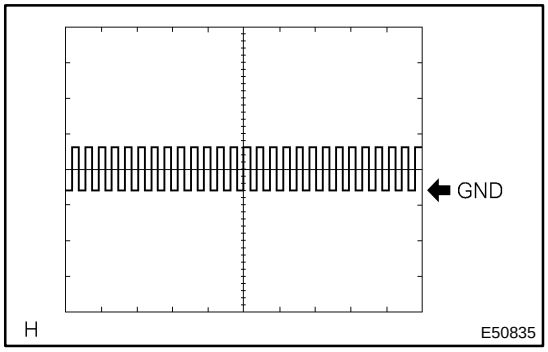

(REFERENCE) INSPECTION USING OSCILLOSCOPE

(a) Check the input signal waveform.
  (1) Remove the combination meter assy with connectors still connected.
  (2) Connect the oscilloscope to the terminals C9–19 of combination meter assy and body ground.
  (3) Start engine.
  (4) Check the signal waveform.

Item	Contents
Tool setting	10 V/ DIV, 20 ms/ DV
Vehicle condition	Engine idle speed

OK → **CHECK AND REPLACE COMBINATION METER ASSY**

NG

3	CHECK HARNESS AND CONNECTOR(BETWEEN ECM AND COMBINATION METER ASSY)

(a) Remove the combination meter.
(b) Check the continuity between terminals 5 (TACH) of ECM and C9–19 of combination meter connector.
Standard: There is continuity.

NG → **REPAIR OR REPLACE HARNESS OR CONNECTOR**

OK

CHECK AND REPLACE ECM

MALFUNCTION IN WATER TEMPERATURE RECEIVER GAUGE

WIRING DIAGRAM

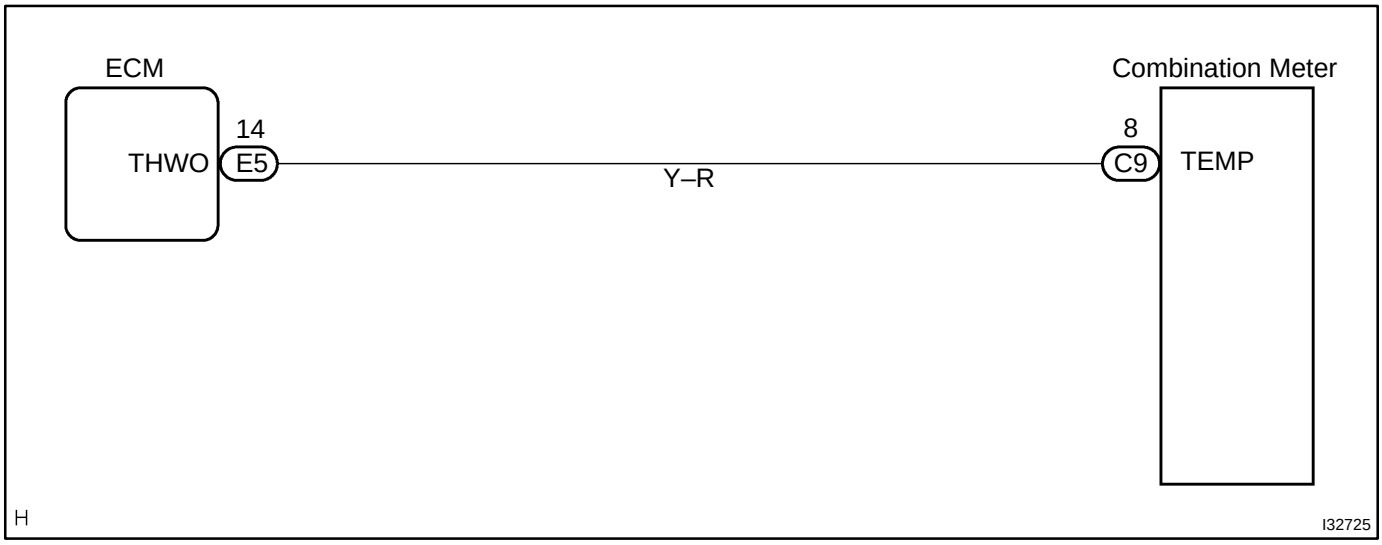

INSPECTION PROCEDURE

1	READ VALUE OF HAND–HELD TESTER

(a) Check output value of ECM.
  (1) Connect the hand–held tester to DLC3.
  (2) Turn the ignition switch to ON and push the hand–held tester main switch ON.
  (3) Select the DATA LIST mode on the hand–held tester.

Item	Condition	Specified Condition	Mesurement Item /Range (Display)
COOLANT TEMP	After Warming Up	80 – 95°C (176 – 203°F)	Coolant Temperature / Min.: –40°C, Max.: 140°C

NG → GO TO ENGINE CONTROL SYSTEM

OK

2	INSPECT COMBINATION METER ASSY

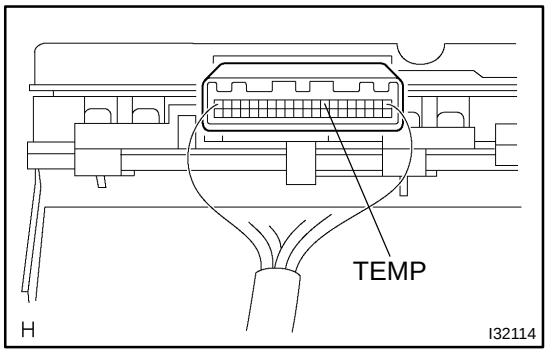

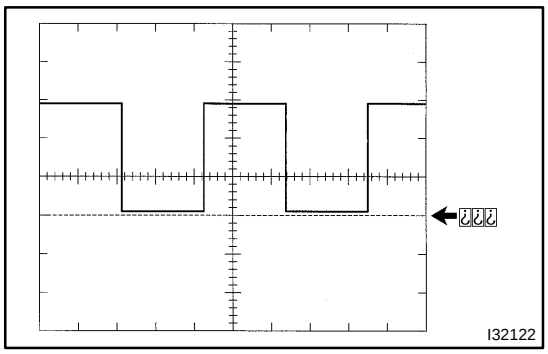

(REFERENCE) INSPECTION USING OSCILLOSCOPE

(a) Check the input signal waveform.
  (1) Remove the combination meter with connectors still connected.
  (2) Connect the oscilloscope to the terminals C9–8 of combination meter assy and body ground.
  (3) Start engine.
  (4) Check the signal waveform.

Item	Contents
Tool setting	5 V/ DIV, 100 ms/ DV
Vehicle condition	Ignition switch ON

OK → **CHECK AND REPLACE COMBINATION METER ASSY**

NG

3	CHECK HARNESS AND CONNECTOR(BETWEEN ECM AND COMBINATION METER ASSY)

(a) Remove the combination meter.
(b) Check the continuity between terminals 14 (THWO) of ECM and C9–8 of combination meter connector.
Standard: There is continuity.

NG → **REPAIR OR REPLACE HARNESS OR CONNECTOR**

OK

CHECK AND REPLACE ECM

SEAT BELT WARNING LAMP FOR DRIVER'S SEAT DOES NOT OPERATE

WIRING DIAGRAM

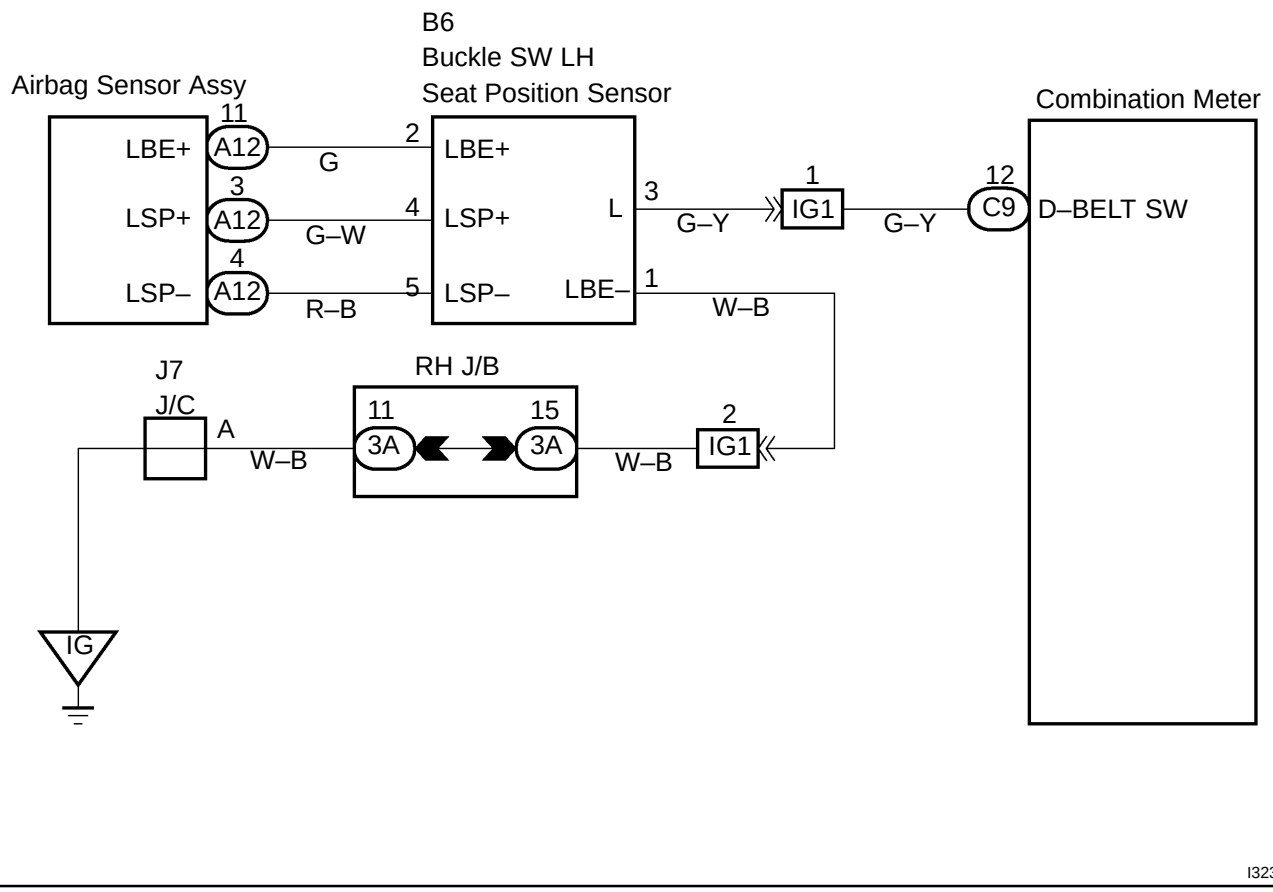

INSPECTION PROCEDURE

1	CHECK COMBINATION METER ASSY

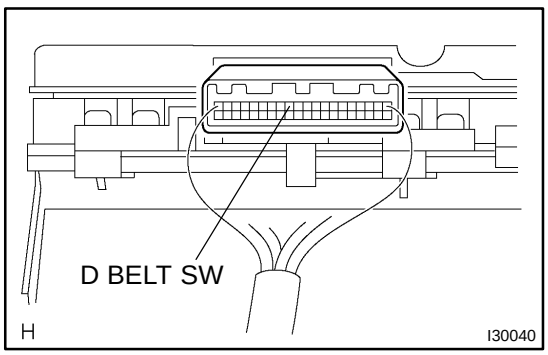

(a) Ground terminal C9–12 on the combination meter side.
(b) Check that the warning lightlights up.
OK: Warning light lights up.

NG → **CHECK AND REPLACE COMBINATION METER ASSY**

OK

2	INSPECT FRONT SEAT INNER BELT ASSY LH

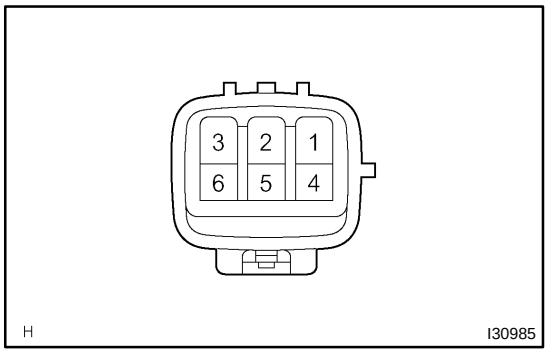

(a) Disconnect the front seat inner belt assy.
(b) Check continuity front seat inner belt assy.

Belt condition	Terminal	Specified condition
Belt unfastend	1 – 2	Continuity
Belt fastend	1 – 2	No continuity

NG → **REPLACE FRONT SEAT INNER BELT ASSY LH**

OK

REPAIR OR REPLACE HARNESS OR CONNECTOR

SEAT BELT WARNING LAMP FOR FRONT PASSENGER'S SEAT DOES NOT FLASH

WIRING DIAGRAM

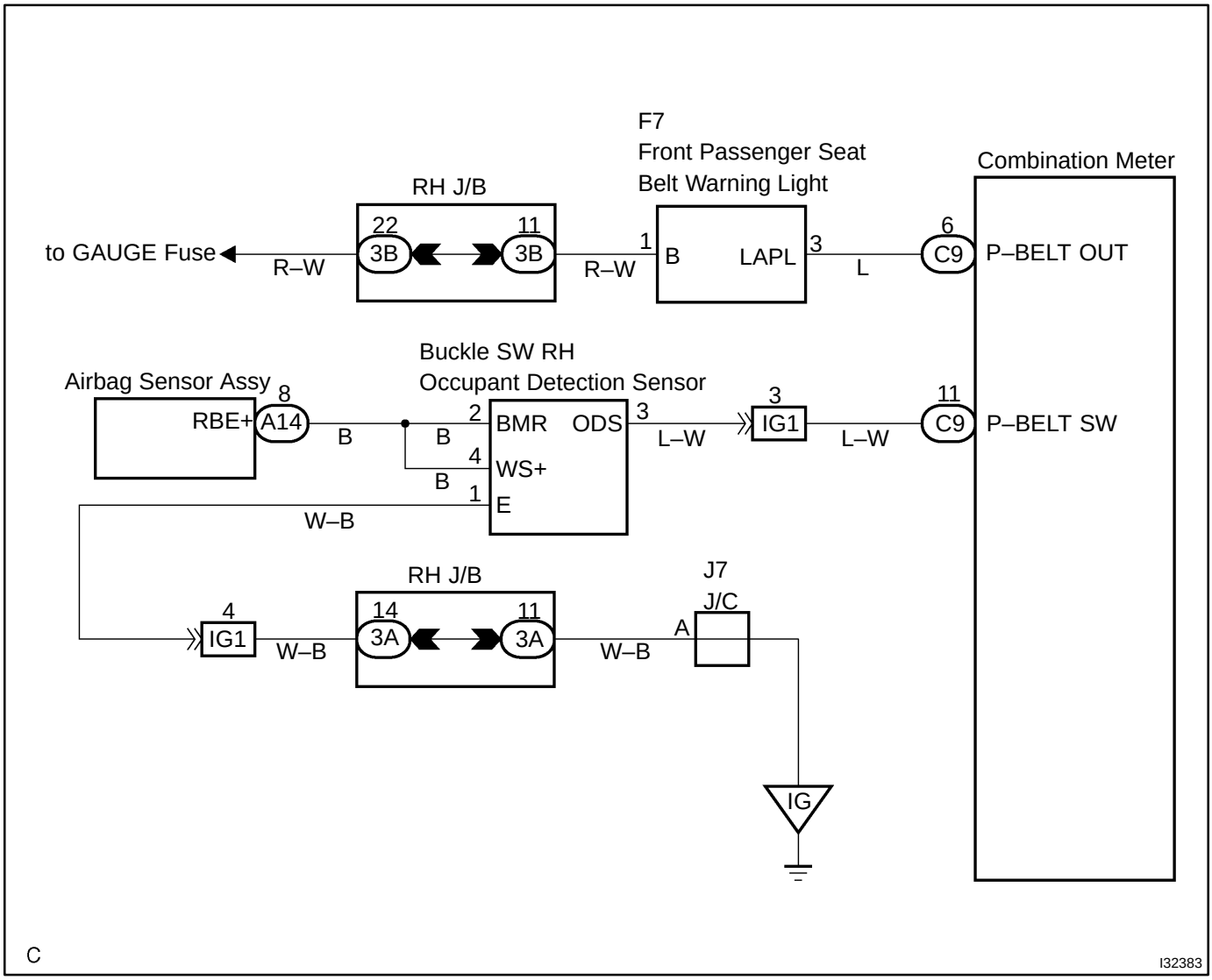

INSPECTION PROCEDURE

1 INSPECT COMBINATION METER ASSY

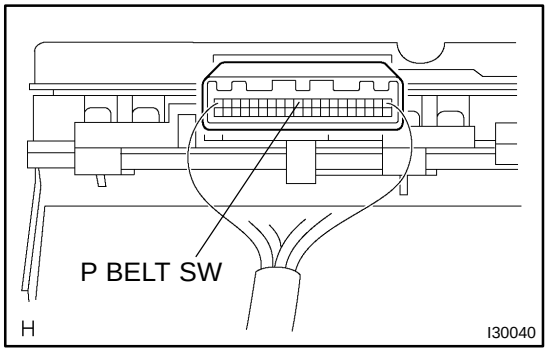

(a) Ground terminal C9–11 on the combination meter side.
(b) Check that the warning lightlights up.
OK: Warning light lights up.

OK	**Go to step 3**

NG

2 INSPECT PASSENGER SEAT BELT WARNING LAMP ASSY

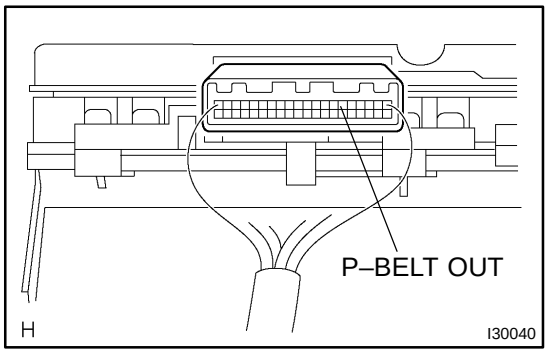

(a) Ground terminal C9–6 on the combination meter side.
(b) Check that the warning lightlights up.
OK: Warning light lights up.

NG	**CHECK AND REPLACE PASSENGER SEAT BELT WARNING LAMP ASSY**

OK

CHECK AND REPLACE COMBINATION METER ASSY

3 INSPECT FRONT SEAT INNER BELT ASSY RH

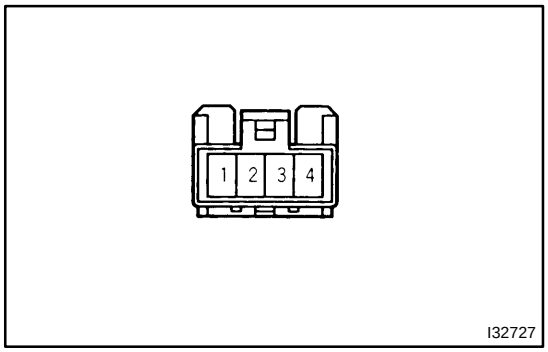

(a) Check continuity.
(1) Disconnect the front seat inner belt assy.
(2) Check the continuity in between terminals 1 and 2 of front seat inner belt assy RH.
OK:

Condition	Continuity
Seat belt is fastened	Continuity
Seat belt is unfastened	No continuity

NG	**CHECK AND REPLACE FRONT SEAT INNER BELT ASSY RH**

OK

4	INSPECT SEPARATE SEAT TYPE FRONT SEAT CUSHION PAD

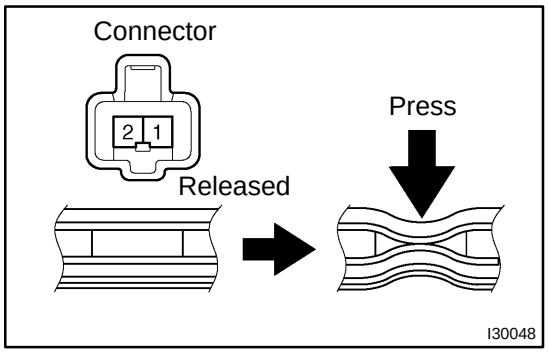

(a) Disconnect the separate type front seat cushion pad.
(b) Check continuity separate type front seat cushion pad.

Sear condition	Terminal	Specified condition
Released	1 – 2	No continuity
Pressed	1 – 2	Continuity

NG → **CHECK AND REPLACE SEPARATE SEAT TYPE FRONT SEAT CUSHION PAD**

OK

REPAIR OR REPLACE HARNESS AND CONNECTOR

057KE–02

PROBLEM SYMPTOMS TABLE

Symptom	Suspect Area	See page
Entire combination meter does not operate.	3. Fuse 4. Wire–harness and connector 5. Combination meter assembly	05–648
Malfunction in speed meter.	1. Brake system 2. Wire–harness and connector 3. Combination meter assembly	05–650
Malfunction in tacho meter.	1. ECM 2. Wire–harness and connector 3. Combination meter assembly	05–653
Malfunction in fuel receiver gauge.	1. Fuel sender gauge 2. Wire–harness and connector 3. Combination meter assembly	05–655
Malfunction in water temperature gauge.	1. ECM 2. Wire–harness and connector 3. Combination meter assembly	05–657
”Key unlock warning bozzer” or ”Light auto turn off warning buzzer” does not operate.	1. Front door courtesy switch 2. Key unlock warning switch 3. Wire–harness and connector 4. Combination meter assembly	05–659
Driver seat belt warning buzzer does not sound.	1. Driver seat belt buckle switch 2. Wire–harness and connector 3. Combination meter assembly	05–663
Seat belt warning lamp for front passenger seat does not flash.	1. Front seat inner belt assembly 2. Separate type front seat cushion pad 3. Combination meter assembly 4. Passenger seat belt warning light assembly	05–663
Malfunction in clock.	1. Fuse 2. Wire–harness and connector 3. Clock assembly	05–666
The ambient temperature does not display.	1. Fuse 2. Wire–harness and connector 3. Ambient temperature sensor	05–668

057KD–04

TERMINALS OF ECU

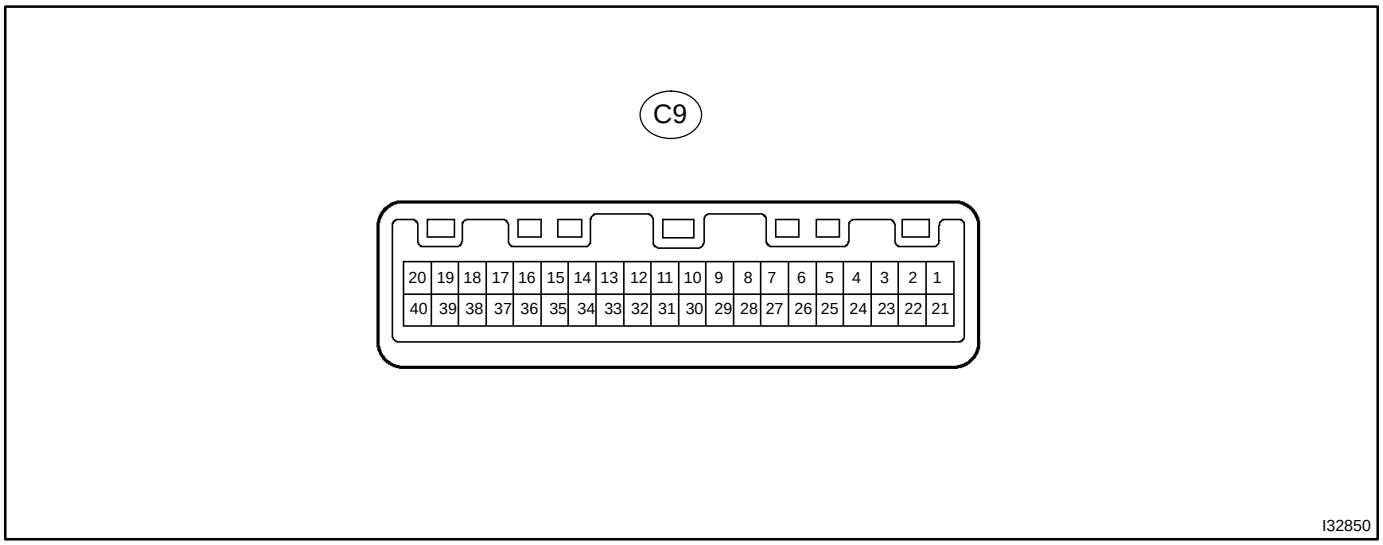

Terminals No. (Symbols)	Wiring Color	Condition	STD Voltage (V)
1 ↔ Body ground (SIGNAL EARTH ↔ Body ground)	BR	Constant	Continuity
2 ↔ Body ground (POWER EARTH ↔ Body ground)	W–B	Constant	Continuity
3 ↔ Body ground (O/D ↔ Body ground)	LG	O/D off indicator light ON → OFF	Below 1V → 10 – 14 V
4 ↔ Body ground (IG1+ ↔ Body ground)	R–W	Ignition switch OFF or ACC → ON	Below 1V → 10 – 14 V
5 ↔ Body ground (+B ↔ Body ground)	L–W	Constant	10 – 14 V
6 ↔ Body ground (P–BELT OUT ↔ Body ground)	L	Passenger seat belt warning ON → OFF	Below 1V ↔ 10 – 14 V
7 ↔ Body ground (FUEL ↔ Body ground)	Y	Fuel level is full → empty	Below 1V → 4 – 7 V
8 ↔ Body ground (TEMP ↔ Body ground)	Y–R	Ignition switch ON	Pulse generation
9 ↔ Body ground (SP IN ↔ Body ground)	W–G	Ignition switch ON and slowly turn drive wheel	Below 1 V ↔ 10 – 14 V
10 ↔ Body ground (4P OUT ↔ Body ground)	V–W	Ignition switch ON and slowly turn drive wheel	Below 1 V ↔ 10 – 14 V
11 ↔ Body ground (P BELT SW ↔ Body ground)	L–W	Ignition switch ON and passenger seat belt buckle switch ON (Belt unfastened)	Below 1 V
		Ignition switch ON and passenger seat belt buckle switch OFF (Belt fastened)	10 – 14 V
12 ↔ Body ground (D BELT SW ↔ Body ground)	G–Y	Ignition switch ON and driver seat belt buckle switch ON (Belt unfastened)	Below 1 V
		Ignition switch ON and driver seat belt buckle switch OFF (Belt fastened)	10 – 14 V
13 ↔ Body ground (BEAM– ↔ Body ground)	W–B	Hi beam indicator light ON → OFF	Below 1V → 10 – 14 V
14 ↔ Body ground (BEAM+ ↔ Body ground)	R	Constant	10 – 14 V

16 ↔ Body ground (KEY SW ↔ Body ground)	L–B	Ignition key inserted	Below 1 V
		No ignition key inserted	10 – 14 V
17 ↔ Body ground (D DOOR ↔ Body ground)	R–W	Driver door opened → closed	Below 1V → 10 – 14 V
18 ↔ Body ground (ILL+ ↔ Body ground)	G	Tail light switch OFF → ON	Below 1V → 10 – 14 V
19 ↔ Body ground (TACHO ↔ Body ground)	B	Engine running	Pulse generation
20 ↔ Body ground (EXCEPT D DOOR ↔ Body ground)	R	Passenger door opened → closed	Below 1V → 10 – 14 V
21 ↔ Body ground (OIL P ↔ Body ground)	W	Oil pressure warning light ON → OFF	Below 1V → 10 – 14 V
22 ↔ Body ground (FUEL EARTH ↔ Body ground)	BR	Constant	Continuity
23 ↔ Body ground (CRUISE ↔ Body ground)	G–R	Ignition switch ON and cruise indicator light ON → OFF	Below 1V → 10 – 14 V
24 ↔ Body ground (TURN L ↔ Body ground)	G–B	Left turn indicator light OFF → ON	Below 1V → 10 – 14 V
25 ↔ Body ground (TURN R ↔ Body ground)	G–Y	Right turn indicator light OFF → ON	Below 1V → 10 – 14 V
26 ↔ 30 (OUT SIDE TEMP+ ↔ OUT SIDE TEMP–)	B – B–L	Outside temperature at +25°C (77°F)	1.6 – 1.8KΩ
28 ↔ Body ground (ILL– ↔ Body ground)	W–R	Ignition switch On and light control rheostat volume minimum	No voltage
31 ↔ Body ground (CHG– ↔ Body ground)	Y	Discharge indicator light OFF → ON	Below 1V → 10 – 14 V
32 ↔ Body ground (IG2 ↔ Body ground)	B–O	Ignition switch OFF → ON	Below 1V → 10 – 14 V
33 ↔ Body ground (CHK ENG ↔ Body ground)	R–Y	Malfunction indicator light ON → OFF	Below 1V → 10 – 14 V
34 ↔ Body ground (WASHER LEVEL ↔ Body ground)	* L–W	Washer level indicator light ON → OFF	Below 1V → 10 – 14 V
35 ↔ Body ground (BRAKE LEVEL SW ↔ Body ground)	R–W	Ignition switch ON and brake fluid level warning light ON → OFF	Below 1V → 10 – 14 V
36 ↔ Body ground (EBD ↔ Body ground)	R	Brake warning light ON → OFF	4 – 8 V → Below 1V
37 ↔ Body ground (ABS ↔ Body ground)	W–R	ABS warning light ON → OFF	4 – 8 V → Below 1V
39 ↔ Body ground (A/B ↔ Body ground)	B–Y	A/B warning light ON → OFF	Below 1V → 6 – 11 V

*: Canada

COMBINATION METER

HOW TO PROCEED WITH TROUBLESHOOTING

057KA–02

1	Vehicle Brought to Workshop

2	Customer Problem Analysis (See page 05–639)

3	Problem Symptom Confirmation (See page 05–647)

4	Circuit Inspection (See page 05–648 – 05–668)

5	Repair or Replace

6	Confirmation Test

7	End

WARNING BUZZER DOES NOT SOUND (KEY REMINDER WARNING, LIGHT REMINDER WARNING)

WIRING DIAGRAM

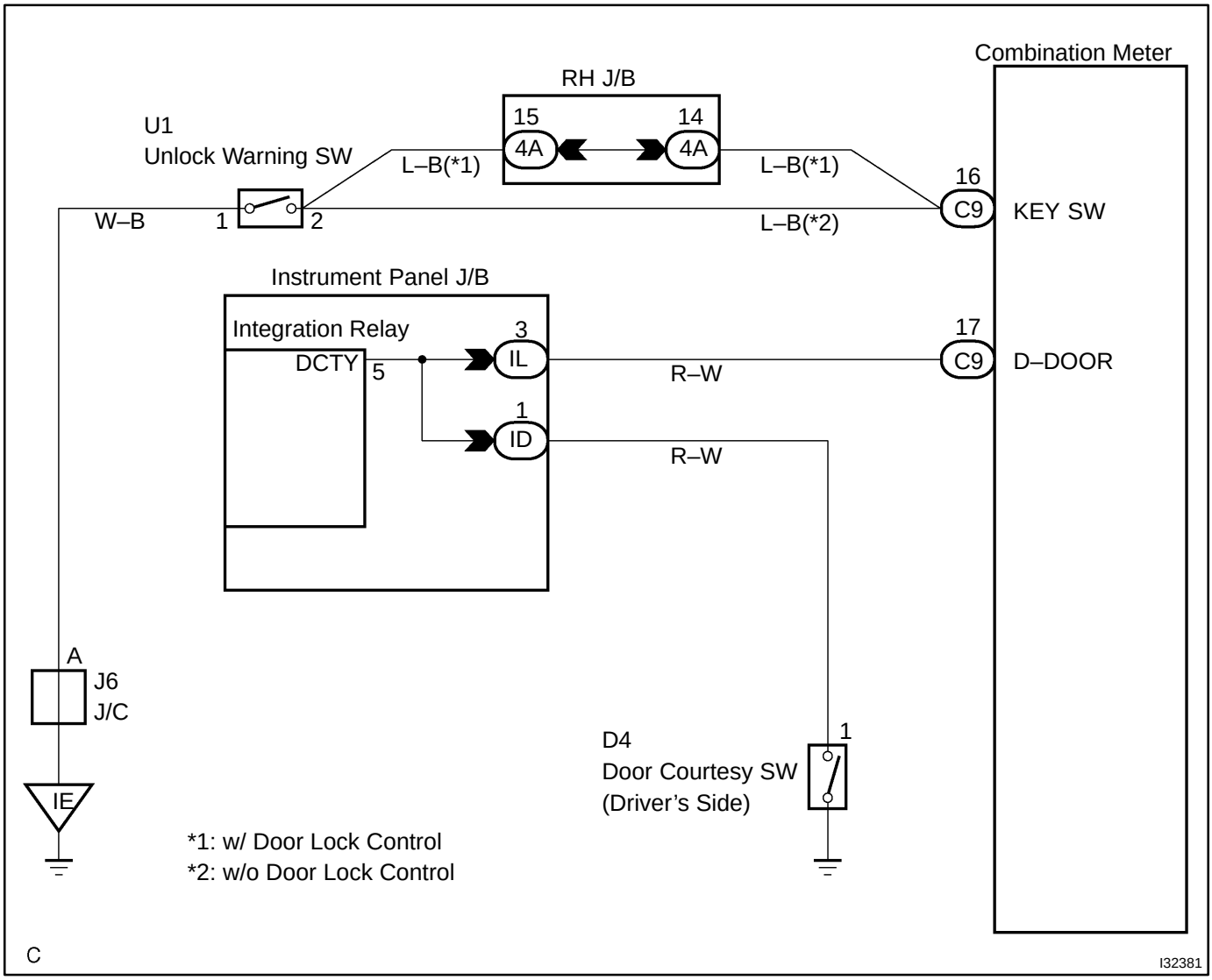

INSPECTION PROCEDERE

1	CHECK BUZZER

(a) Check that all of the warning buzzers sound.

A	B
Some buzzers sound	No buzzer sounds

B → CHECK AND REPLACE COMBINATION METER ASSY

A

2	INSPECT FRONT DOOR COURTESY LAMP SWITCH ASSY(See Page 65–7)

NG → REPLACE FRONT DOOR COURTESY LAMP SWITCH ASSY

OK

3	INSPECT UN–LOCK WARNING SWITCH ASSY(See Page 05–682)

NG → REPLACE UN–LOCK WARNING SWITCH ASSY

OK

4	CHECK HARNESS AND CONNECTOR(BETWEEN UN–LOCK WARNING SWITCH AND COMBINATION METER ASSY)

NG → REPAIR OR REPLACE HARNESS OR CONNECTOR

OK

5	CHECK HARNESS AND CONNECTOR(BETWEEN COURTESY LAMP SWITCH AND COMBINATION METER ASSY)

NG → REPAIR OR REPLACE HARNESS OR CONNECTOR

OK

CHECK AND REPLACE COMBINATION METER ASSY

DTC	11	ACTUATOR MOTOR CIRCUIT

DTC	15	ACTUATOR MOTOR CIRCUIT

CIRCUIT DESCRIPTION

The actuator motor is operated by signals from the cruise control ECU assy. Acceleration and deceleration signals are transmitted by changes in the Duty Ratio (See below).

Duty Ratio:

The duty ratio is the ratio of the period of continuity in one cycle. For example, if A is the period of continuity in one cycle, and B is the period of non–continuity, then.

$$\text{Duty Ratio} = \frac{A}{A + B} \times 100\ (\%)$$

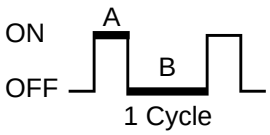

I32640

DTC No.	DTC Detecting Condition	Trouble Area
11	• Short in actuator motor circuit.	• Cruise control actuator assy (Actuator motor) • Actuator motor circuit • Cruise control ECU assy
15	• Open in actuator motor circuit.	• Cruise control actuator assy (Actuator motor)

WIRING DIAGRAM

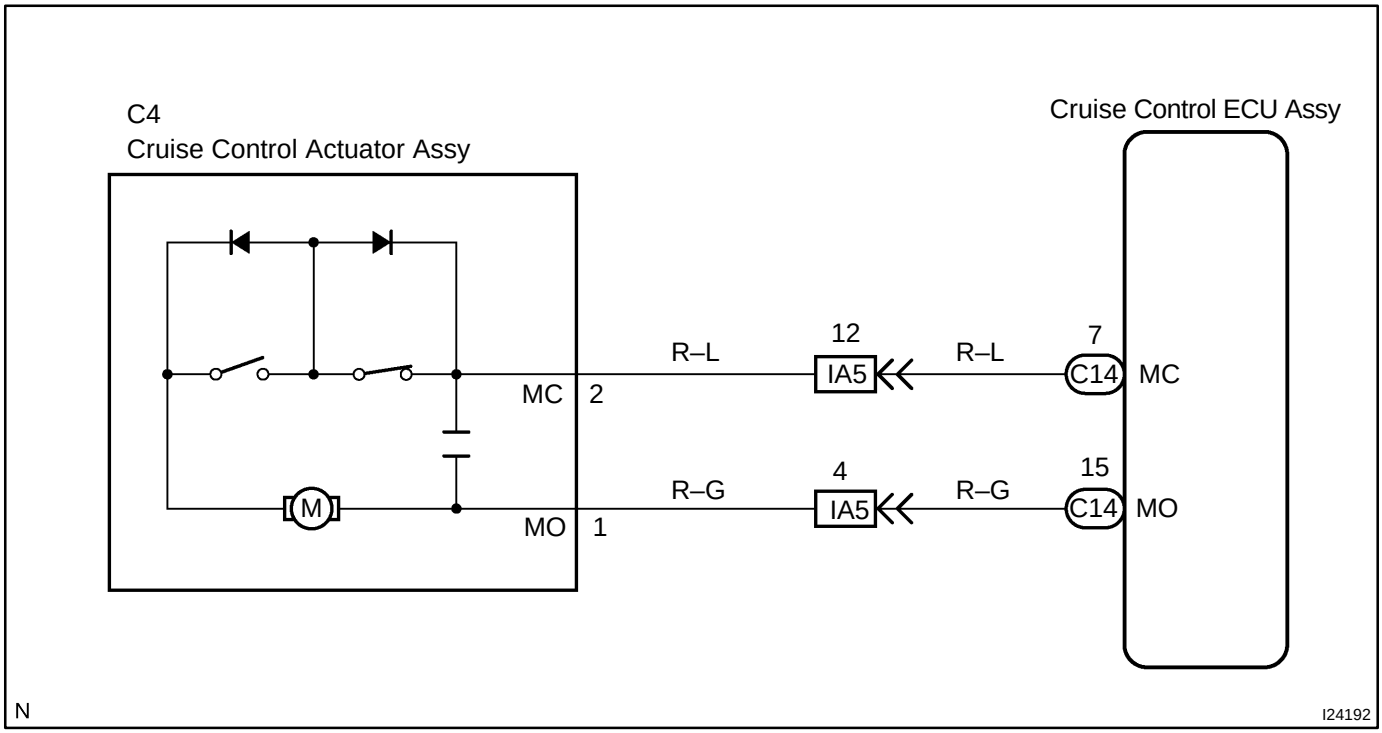

N

I24192

INSPECTION PROCEDURE

1	INSPECT CRUISE CONTROL ACTUATOR ASSY

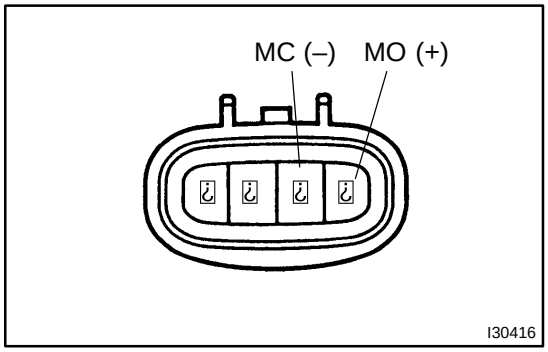

(a) Turn the ignition switch to OFF.
(b) Disconnect the cruise control actuator assy connector.
(c) Measure the resistance between terminals 1 (MO) and 2 (MC) of cruise control actuator assy.

HINT:
If control plate position is fully opened or fully closed, resistance cannot be measured.

OK:
Resistance: More than 4.2 Ω

NG → **REPLACE CRUISE CONTROL ACTUATOR ASSY**

OK

2	CHECK HARNESS AND CONNECTOR(BETWEEN CRUISE CONTROL ECU ASSY AND CRUISE CONTROL ACTUATOR ASSY)

(a) Check for open and short circuit in harness and connector between cruise control ECU assy and cruise control actuator assy (actuator motor) (See page 01–30).

NG → **REPAIR OR REPLACE HARNESS OR CONNECTOR**

OK

CHECK AND REPLACE CRUISE CONTROL ECU ASSY (See page 01–30)

DTC 12 ACTUATOR MAGNETIC CLUTCH CIRCUIT

CIRCUIT DESCRIPTION

This circuit turns on the magnetic clutch inside the actuator during cruise control operation according to the signal from the ECU. If a malfunction occurs in the actuator or speed sensor, etc. during cruise control operation, the rotor shaft between the motor and control plate is released.
When the brake pedal is depressed, the stop lamp switch assy turns ON, supplying electrical power to the stop light. Power supply to the magnetic clutch is mechanically cut and the magnetic clutch is turned OFF.
When driving downhill, if the vehicle speed exceeds the set speed by 8 km/h (5 mph), the ECU turns the safety magnet clutch OFF. If the vehicle speed later drops to within 5 km/h (3 mph) above the set speed, then cruise control at the set speed is resumed.

DTC No.	DTC Detecting Condition	Trouble Area
12	• Short in actuator magnetic clutch circuit. • Open (0.8 sec.) in actuator magnetic clutch circuit.	• STOP Fuse • Stop lamp switch assy • Cruise control actuator assy (Actuator magnetic clutch) • Actuator magnetic clutch circuit • Cruise control ECU assy

WIRING DIAGRAM

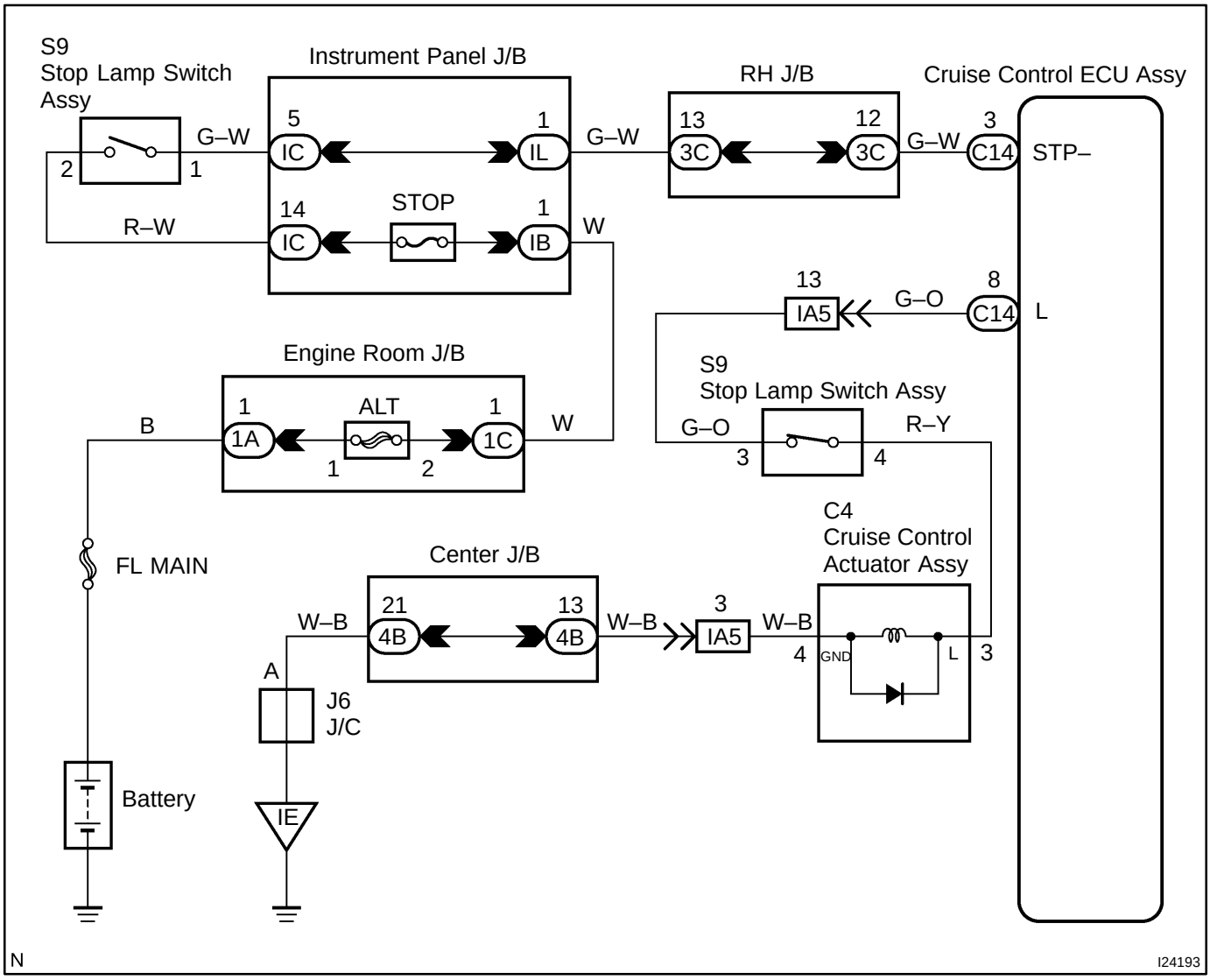

INSPECTION PROCEDURE

1 INSPECT FUSE(STOP)

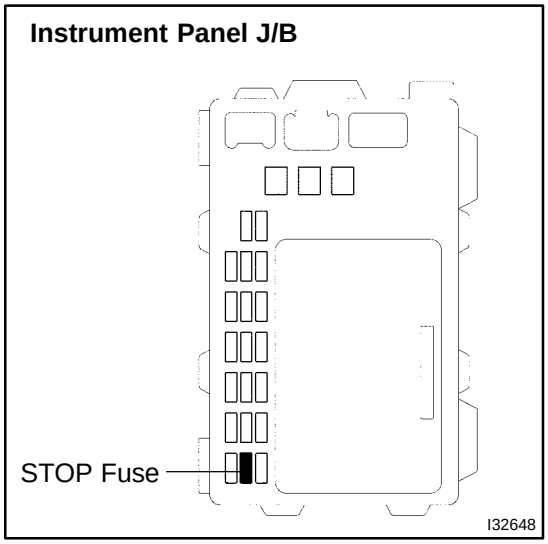

(a) Turn the ignition switch to OFF.
(b) Remove the STOP fuse from the instrument panel J/B.
(c) Check continuity of the STOP fuse.
OK: Continuity

NG → **REPLACE FUSE**

OK

2 INSPECT STOP LAMP SWITCH ASSY

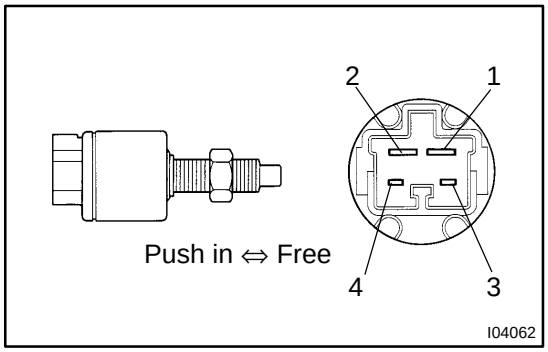

(a) Disconnect the stop lamp switch assy connector.
(b) Check continuity between each terminal of stop lamp switch assy.
OK:

Stop Lamp Switch Assy	Terminal	Specification
Brake pedal depressed (Switch pin free)	1 – 2	Continuity
	3 – 4	No continuity
Brake pedal released (Switch pin pushed in)	1 – 2	No continuity
	3 – 4	Continuity

NG → **REPLACE STOP LAMP SWITCH ASSY**

OK

3	INSPECT CRUISE CONTROL ACTUATOR ASSY

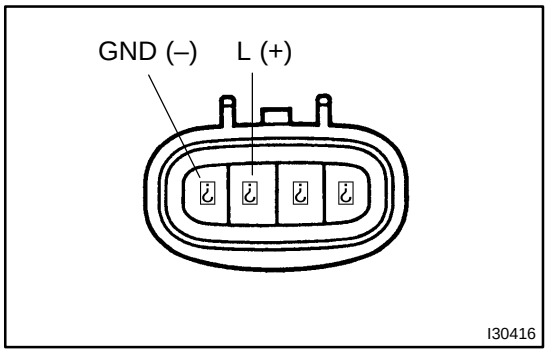

(a) Turn the ignition switch to OFF.
(b) Disconnect the cruise control actuator assy connector.
(c) Measure resistance between terminals 3 (L) and 4 (GND) of the cruise control actuator assy.
OK:
Resistance: 34.65 – 42.35 Ω

NG → **REPLACE CRUISE CONTROL ACTUATOR ASSY**

OK

4	CHECK HARNESS AND CONNECTOR(BETWEEN CRUISE CONTROL ACTUATOR ASSY AND BODY GROUND)

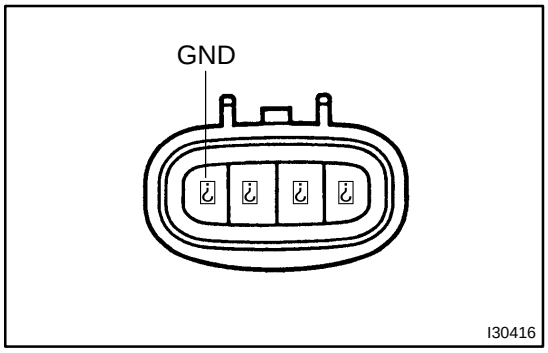

(a) Check continuity between the terminal 4 (GND) of the cruise control actuator assy and body ground.
OK: Continuity

NG → **REPAIR OR REPLACE HARNESS OR CONNECTOR**

OK

5	CHECK HARNESS AND CONNECTOR(BETWEEN CRUISE CONTROL ECU ASSY AND CRUISE CONTROL ACTUATOR ASSY)

(a) Check for open and short circuit in harness and connector between cruise control ECU assy and cruise control actuator assy (actuator magnetic clutch) (See page 01–30).

NG → **REPAIR OR REPLACE HARNESS OR CONNECTOR**

OK

CHECK AND REPLACE CRUISE CONTROL ECU ASSY (See page 01–30)

DTC 14 ACTUATOR MECHANICAL MALFUNCTION

CIRCUIT DESCRIPTION

The circuit detects the rotation position of the actuator control plate and sends a signal to the cruise control ECU assy.

DTC No.	DTC Detecting Condition	Trouble Area
14	• Cruise control actuator assy mechanical malfunction.	• Cruise control actuator assy (Actuator motor) (Actuator lock: motor, arm) • Cruise control ECU assy

WIRING DIAGRAM

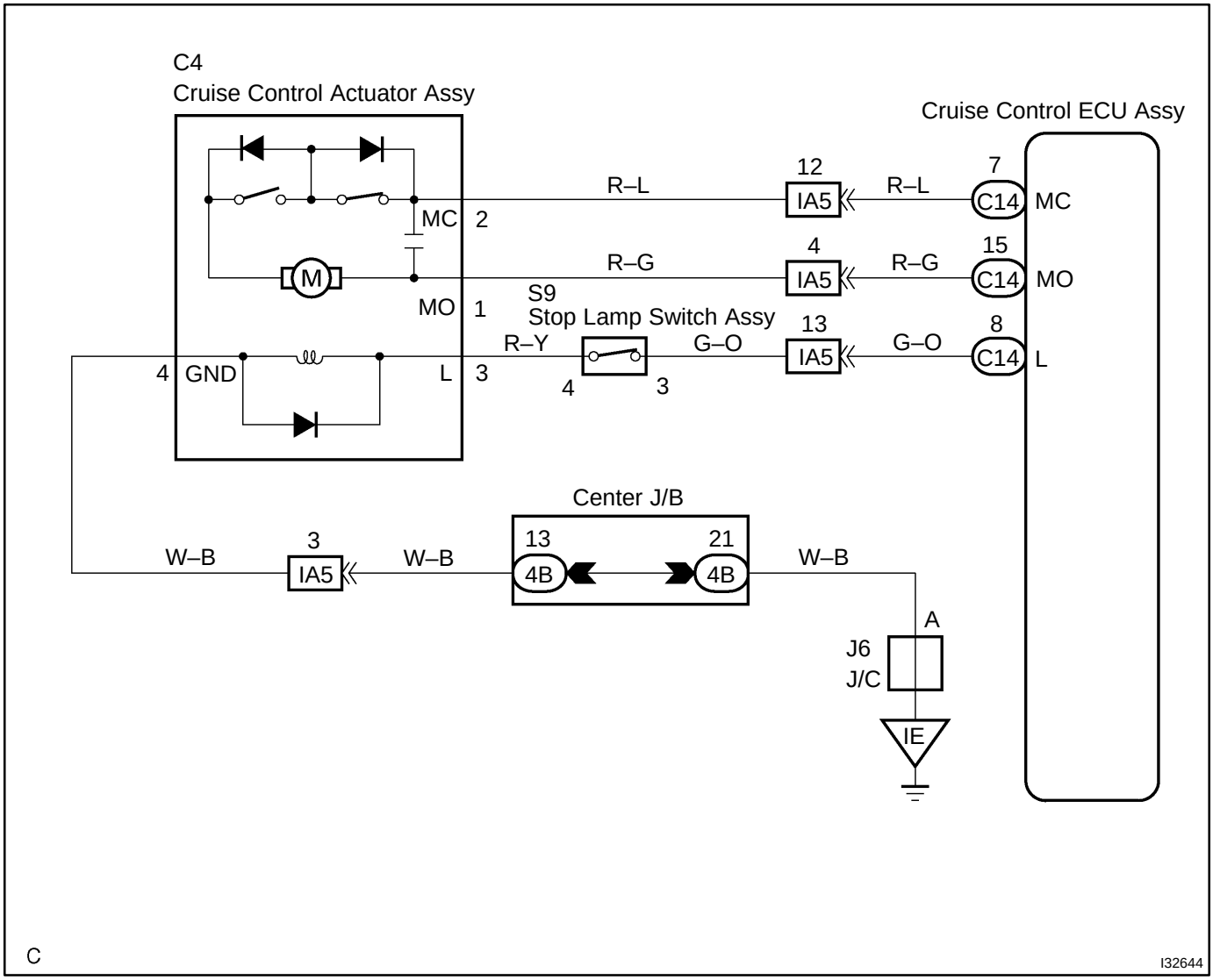

INSPECTION PROCEDURE

1	INSPECT CRUISE CONTROL ACTUATOR ASSY

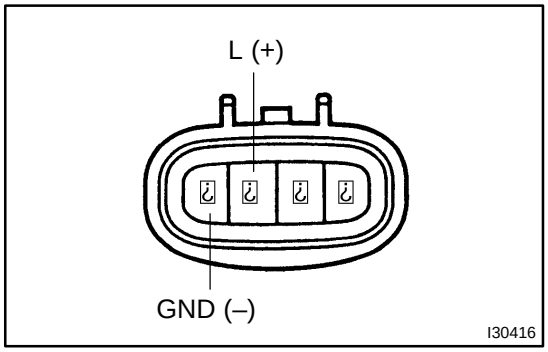

(a) Inspect the cruise control actuator arm locking operation.
  (1) Turn the ignition switch to OFF.
  (2) Disconnect the cruise control actuator assy connector.
  (3) Connect the positive (+) lead from the battery to the terminal 3 (L) of cruise control actuator assy and the negative (–) lead to terminal 4 (GND).

NOTICE:

Do not connect the high tension cables to the wrong battery terminal. You will damage the cruise control actuator assy.

  (4) Move the control plate by hand.

  OK:

  Control plate does not move.

(b) Inspect the cruise control actuator assy operation.
  (1) Turn the ignition switch to OFF.
  (2) Disconnect the cruise control actuator assy connector.
  (3) Connect the positive (+) lead from the battery to terminals 1 (MO) and 3 (L) of cruise control actuator assy, connect the negative (–) lead to terminals 2 (MC) and 4 (GND) of cruise control actuator assy.

  OK:

  Control arm moves to full open side.

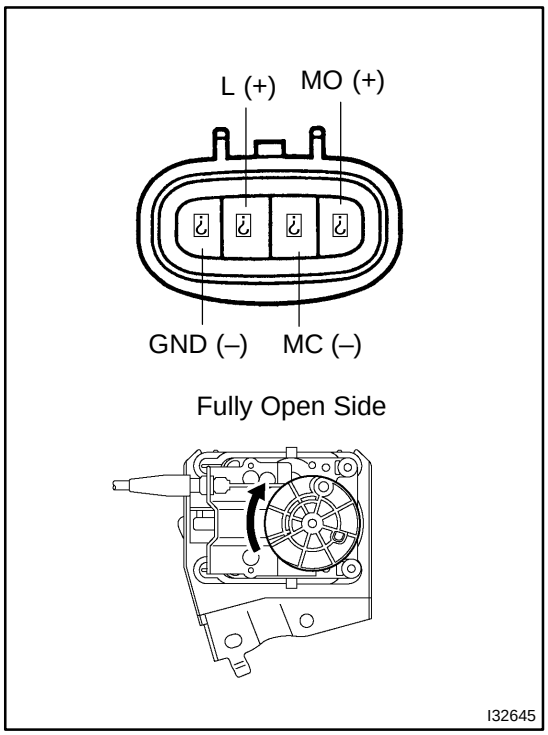

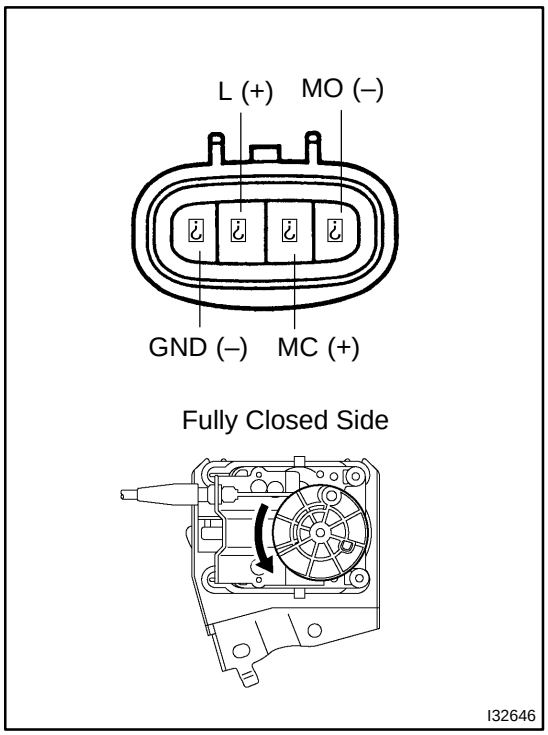

(4) Connect the positive (+) lead from the battery to terminals 2 (MC) and 3 (L) of cruise control actuator assy, connect the negative (–) lead to terminals 1 (MO) and 4 (GND) of cruise control actuator assy.

OK:

Control arm moves to full close side.

NG	**REPLACE CRUISE CONTROL ACTUATOR ASSY**

OK

2	**CHECK HARNESS AND CONNECTOR(BETWEEN CRUISE CONTROL ECU ASSY AND CRUISE CONTROL ACTUATOR ASSY)**

(a) Check for open and short circuit in harness and connector between cruise control ECU assy and cruise control actuator assy (actuator motor) (See page 01–30).

NG	**REPAIR OR REPLACE HARNESS OR CONNECTOR**

OK

CHECK AND REPLACE CRUISE CONTROL ECU ASSY (See page 01–30)

DTC	21	OPEN VEHICLE SPEED SENSOR CIRCUIT

DTC	23	VEHICLE SPEED SIGNAL ABNORMAL

CIRCUIT DESCRIPTION

The vehicle speed sensor circuit is sent to cruise control ECU assy as a vehicle speed signal. For each rotation of the shaft, the vehicle speed sensor sends a signal through the combination meter assembly to the cruise control ECU assy (See the following chart). The cruise control ECU assy calculates the vehicle speed from this pulse frequency.

DTC No.	DTC Detecting Condition	Trouble Area
21	• Speed signal is not input to the cruise control ECU assy while cruise control is set.	• Combination meter assembly • Vehicle speed sensor • Vehicle speed sensor circuit • Cruise control ECU assy
23	• Vehicle speed sensor pulse is abnormal.	• Vehicle speed sensor • Cruise control ECU assy

WIRING DIAGRAM

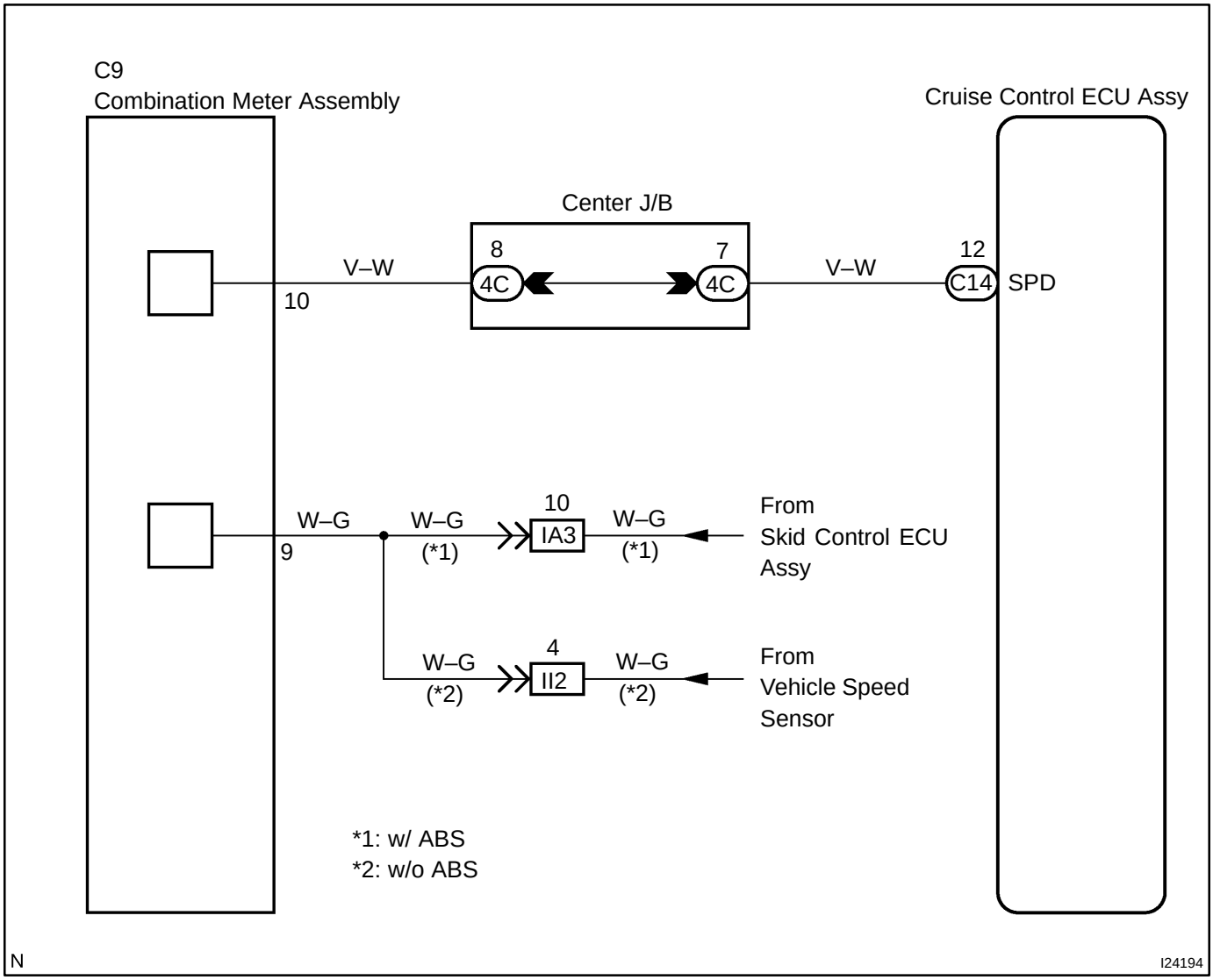

INSPECTION PROCEDURE

1	INPUT SIGNAL CHECK

Input Signal	Indicator Light Blinking Pattern
Drive at about 40 km/h (25 mph) or below	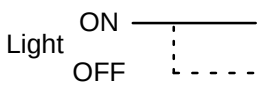
Drive at about 40 km/h (25 mph) or over	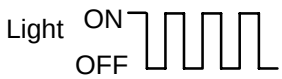

(a) See input signal check on page 05–745.
(b) Check indicator light operation when driving with vehicle speed above 40 km/h (25 mph), and with vehicle speed below 40 km/h (25 mph).

OK:
Vehicle speed above 40 km/h (25 mph):
Indicator light blinks
Vehicle speed below 40 km/h (25 mph):
Indicator light stays ON

OK → **PROCEED TO NEXT CIRCUIT INSPECTION SHOWN ON PROBLEM SYMPTOMS TABLE (See page 05–754)**

NG

2	CHECK SPEEDOMETER CIRCUIT (See page 05–645)

NG → **REPAIR OR REPLACE HARNESS, CONNECTOR OR COMBINATION METER ASSEMBLY**

OK

3	CHECK HARNESS AND CONNECTOR(BETWEEN CRUISE CONTROL ECU ASSY AND COMBINATION METER ASSEMBLY)

(a) Check for open and short circuit in harness and connector between cruise control ECU assy and combination meter assembly (See page 01–30).

NG → **REPAIR OR REPLACE HARNESS OR CONNECTOR**

OK

CHECK AND REPLACE CRUISE CONTROL ECU ASSY (See page 01–30)

DTC	51	IDLE SIGNAL CIRCUIT

CIRCUIT DESCRIPTION

When the idle switch is turned ON, a signal is sent to the cruise control ECU assy. The cruise control ECU assy uses this signal to correct the discrepancy between the throttle valve position and the actuator position sensor values to enable accurate cruise control at the set speed. If the idle switch is malfunctioning, problem symptoms also occur in the engine, so also inspect the engine.

DTC No.	DTC Detecting Condition	Trouble Area
51	• Short in idle signal circuit.	• Throttle position sensor • Idle signal circuit • ECM • Cruise control ECU assy

WIRING DIAGRAM

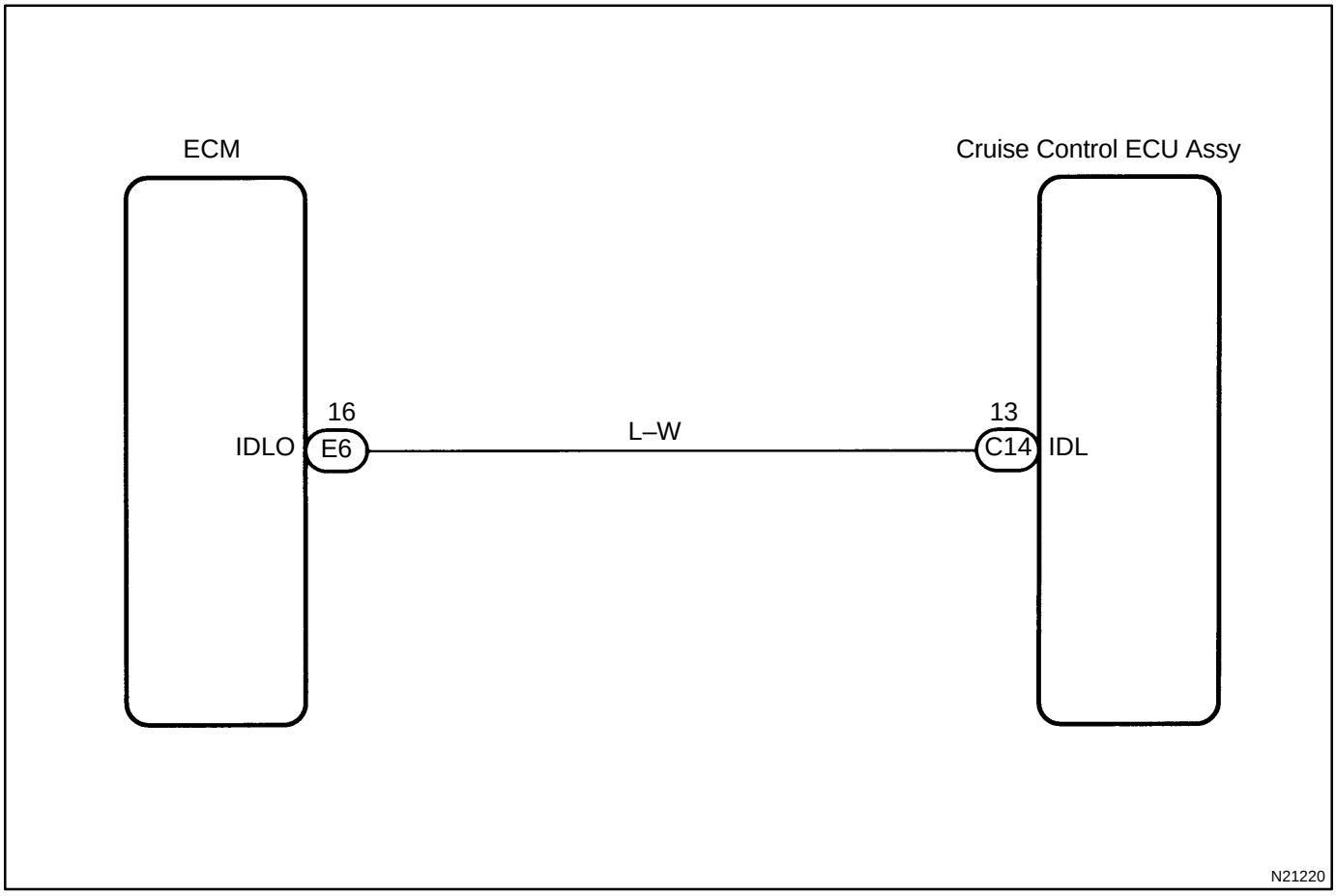

INSPECTION PROCEDURE

1	INSPECT TERMINAL VOLTAGE(IDL)

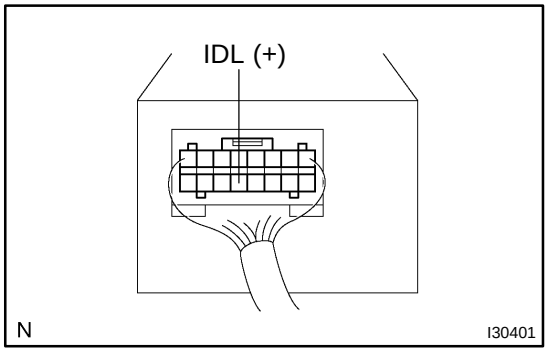

(a) Remove the cruise control ECU assy with connector still connected.
(b) Disconnect the ECM connector.
(c) Turn the ignition switch to ON.
(d) Measure voltage between terminal 13 (IDL) of cruise control ECU assy connector and body ground when the throttle valve is fully closed and fully opened.

OK:

Throttle Valve Position	Voltage
Fully opened	10 – 16 V
Fully closed	Below 1.5 V

OK → **PROCEED TO NEXT CIRCUIT INSPECTION SHOWN ON PROBLEM SYMPTOMS TABLE (See page 01–20)**

NG

2	CHECK HARNESS AND CONNECTOR(BETWEEN CRUISE CONTROL ECU ASSY AND ECM)

(a) Check for open and short circuit in harness and connector between cruise control ECU assy and ECM (See page 05–638).

OK → **REPAIR OR REPLACE HARNESS OR CONNECTOR**

NG

CHECK AND REPLACE CRUISE CONTROL ECU ASSY (See page 05–638)

CLUTCH SWITCH CIRCUIT

CIRCUIT DESCRIPTION

When the clutch pedal is depressed, the clutch switch sends a signal to the cruise control ECU assy. When the signal is input to the cruise control ECU assy during cruise control driving, the cruise control ECU assy cancels the cruise control.

WIRING DIAGRAM

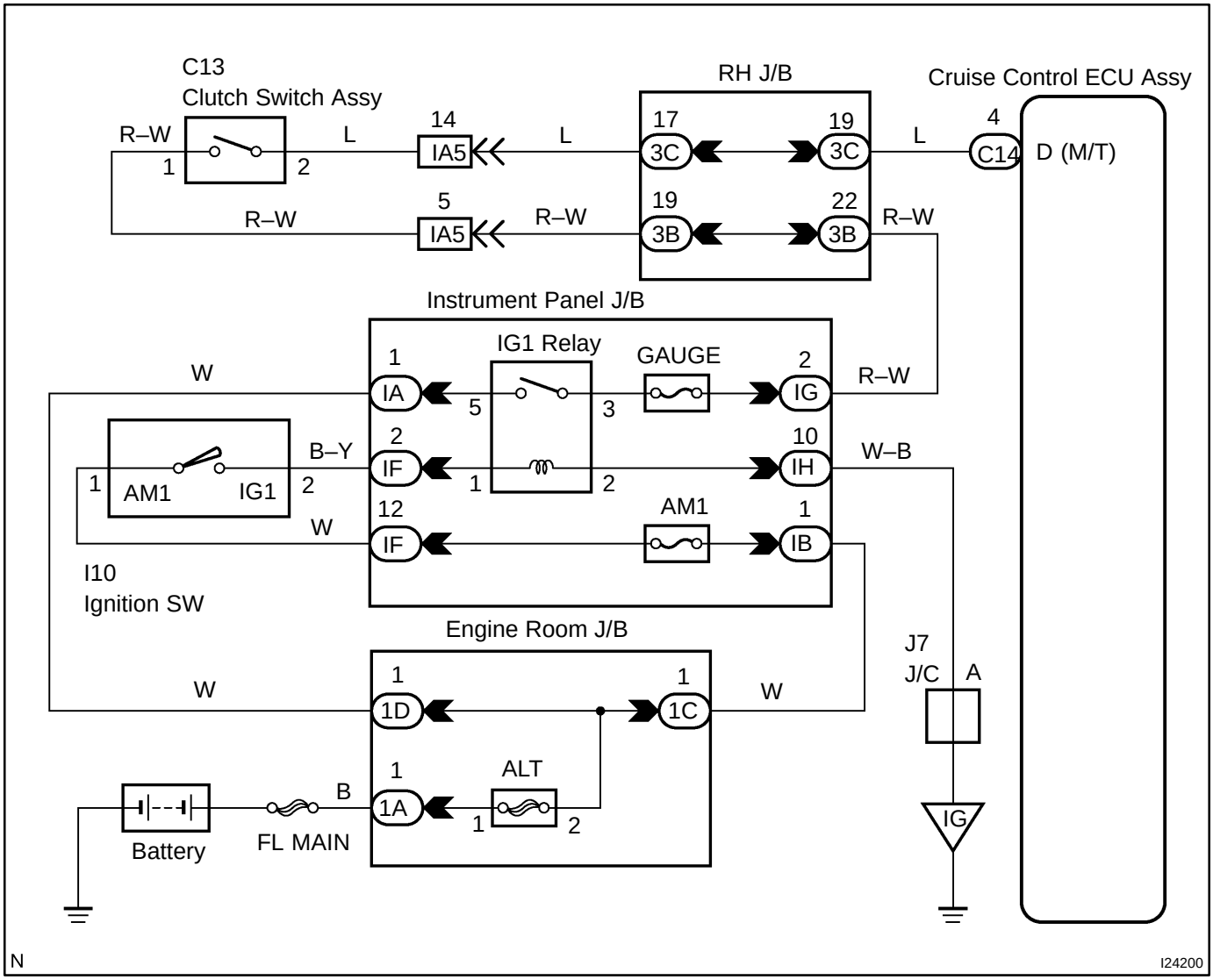

1 INPUT SIGNAL CHECK

Input Signal	Indicator Light Blinking Pattern
Clutch Switch OFF (Depress clutch pedal)	Light ON / OFF — SW ON / SW OFF

(a) See the input signal check on page 05–745.

(b) Check the indicator light when the clutch pedal is depressed.

OK:

The indicator light goes off when the clutch pedal is depressed.

OK → **PROCEED TO NEXT CIRCUIT INSPECTION SHOWN ON PROBLEM SYMPTOMS TABLE (See page 05–754)**

NG

2 INSPECT TERMINAL VOLTAGE(D)

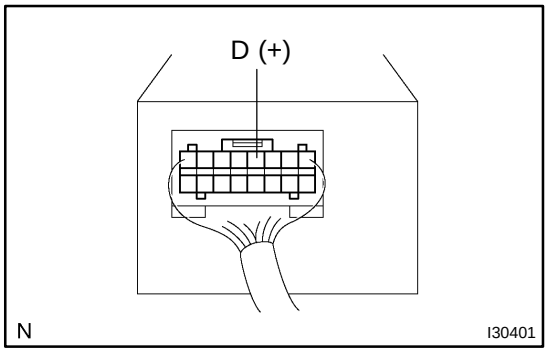

(a) Turn the ignition switch to ON.

(b) Measure the voltage between terminal 4 (D) of the cruise control ECU assy connector and the body ground when the clutch pedal is depressed and released.

OK:

Clutch Pedal	Voltage
Clutch pedal depressed	Below 1 V
Clutch pedal released	10 – 16 V

OK → **PROCEED TO NEXT CIRCUIT INSPECTION SHOWN ON PROBLEM SYMPTOMS TABLE (See page 05–754)**

NG

3	INSPECT CLUTCH SWITCH ASSY

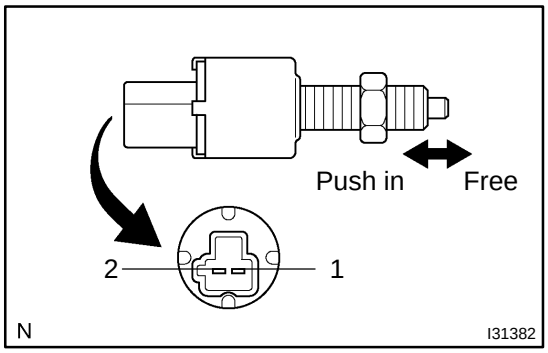

(a) Disconnect the clutch switch assy connector.

(b) Check continuity between terminal 1 and 2 of clutch switch assy.

OK:

Clutch Switch Assy Position	Specification
Switch pin free	No continuity
Switch pin pushed in	Continuity

NG → **REPLACE CLUTCH SWITCH ASSY**

OK

4	CHECK HARNESS AND CONNECTOR(BETWEEN CRUISE CONTROL ECU ASSY AND GAUGE FUSE)

(a) Check for open and short circuit in harness and connector between cruise control ECU assy and gauge fuse (See page 01–30).

NG → **REPAIR OR REPLACE HARNESS OR CONNECTOR**

OK

CHECK AND REPLACE CRUISE CONTROL ECU ASSY (See page 01–30)

CRUISE CONTROL SWITCH CIRCUIT

CIRCUIT DESCRIPTION

This circuit carries the SET/COAST, RES/ACC and CANCEL signals (each voltage) to the cruise control ECU assy.

WIRING DIAGRAM

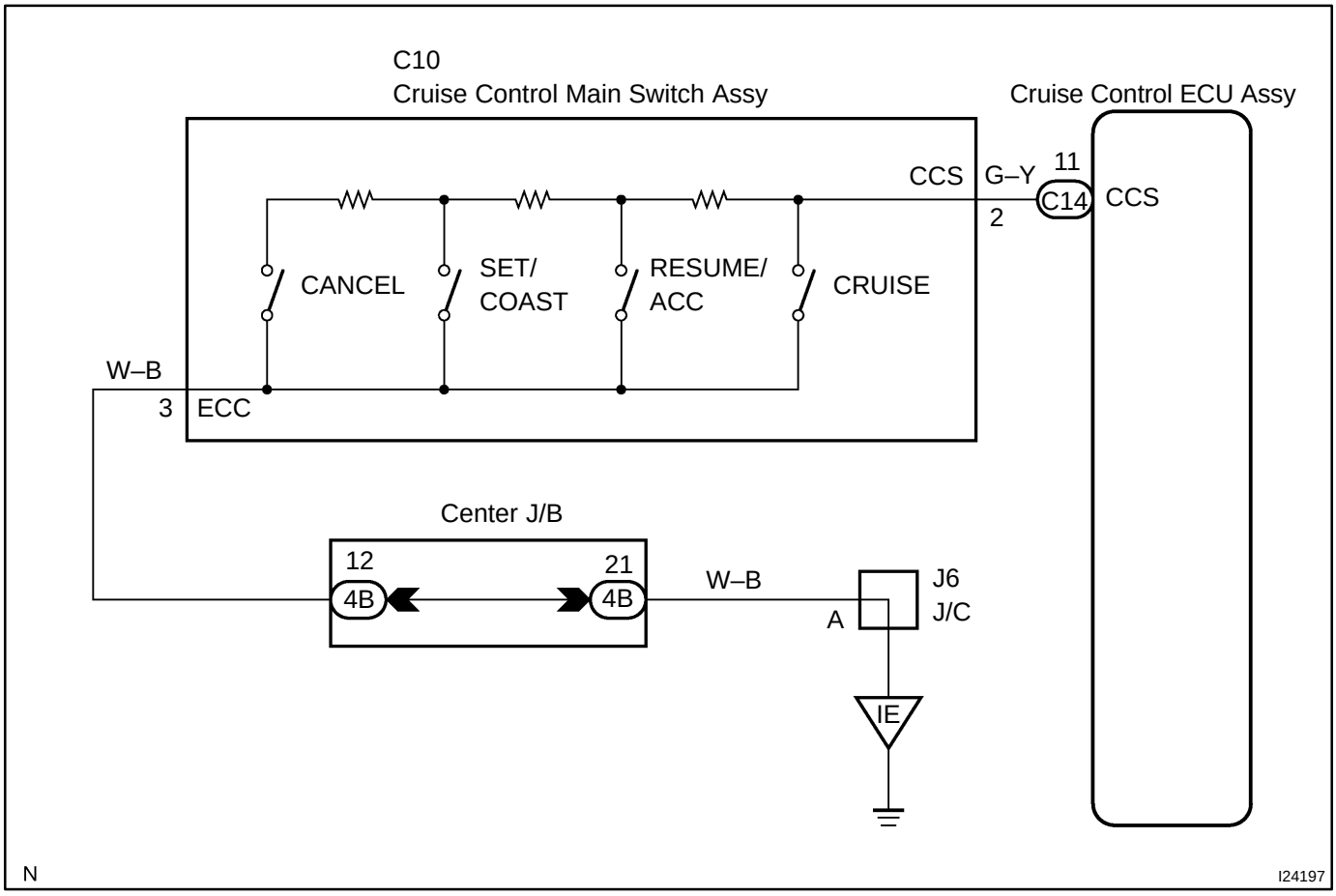

INSPECTION PROCEDURE

1 INPUT SIGNAL CHECK

Input Signal	Indicator Light Blinking Pattern
SET/COAST Switch	2 Pulses: ON / OFF
RES/ACC Switch	3 Pulses: ON / OFF
CANCEL Switch	SW OFF: ON / OFF; SW ON

(a) See input signal check on page 05–745.

(b) Check the indicator light operation when each of the SET/COAST, RESUME/ACCEL and CANCEL is turned on.

OK:

SET/COAST, RESUME/ACCEL switch:

The signals shown in the table on the left should be output when each switch is ON. The signal should disappear when the switch is turned OFF.

CANCEL switch:

The indicator light goes off when the cancel switch is turned ON.

OK → **WAIT AND SEE**

NG

2 INSPECT TERMINAL VOLTAGE(CCS)

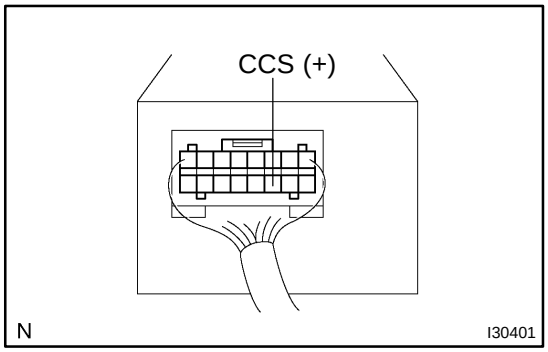

(a) Remove the cruise control ECU assy with the connector being connected.

(b) Turn the ignition switch to ON.

(c) Measure the voltage between terminals 11 (CCS) of the cruise control ECU assy connector and the body ground when each control switch is operated.

OK:

Switch Position	Voltage
Neutral	10 – 16 V
CRUISE ON–OFF	Below 0.5 V
RES/ACC	2.3 – 4.5 V
SET/COAST	4.5 – 8.1 V
CANCEL	6.6 – 11.4 V

NG → **PROCEED TO NEXT CIRCUIT INSPECTION SHOWN ON PROBLEM SYMPTOMS TABLE (See page 05–754)**

OK

3	INSPECT CRUISE CONTROL MAIN SWITCH ASSY

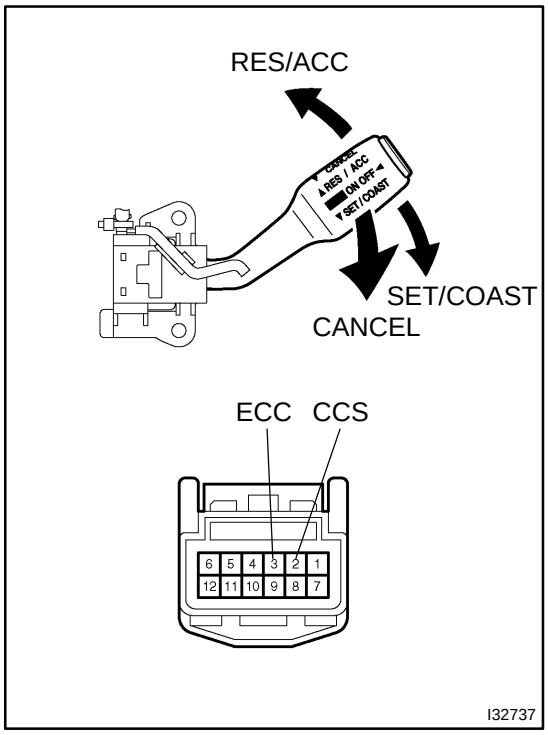

(a) Remove the steering wheel center pad (See page 50–8).

(b) Disconnect the control switch assy connector.

(c) Check continuity between terminals 2 (CCS) and 3 (ECC) of control switch assy connector when cruise control main switch assy is held ON and OFF.

OK:

Switch Position	Resistance
Neutral	∞ (No continuity)
CRUISE ON–OFF	0 Ω (Continuity)
RES/ACC	210 – 270 Ω
SET/COAST	560 – 700 Ω
CANCEL	1,380 – 1,700 Ω

NG → **REPLACE CRUISE CONTROL MAIN SWITCH ASSY**

OK

4	CHECK HARNESS AND CONNECTOR(BETWEEN CRUISE CONTROL MAIN SWITCH ASSY AND BODY GROUND)

(a) Check for open and short circuit in harness and connector between cruise control main switch assy and body ground (See page 01–30).

NG → **REPAIR OR REPLACE HARNESS OR CONNECTOR**

OK

5	CHECK HARNESS AND CONNECTOR(BETWEEN CRUISE CONTROL ECU ASSY AND CRUISE CONTROL MAIN SWITCH ASSY)

(a) Check for open and short circuit in harness and connector between cruise control ECU assy and cruise control main switch assy (See page 01–30).

NG → **REPAIR OR REPLACE HARNESS OR CONNECTOR**

OK

6	INPUT SIGNAL CHECK(See step 1)

OK → WAIT AND SEE

NG

CHECK AND REPLACE CRUISE CONTROL ECU ASSY (See page 01–30)

CRUISE MAIN INDICATOR LIGHT CIRCUIT

CIRCUIT DESCRIPTION

When the cruise control main switch assy button is turned to ON, CRUISE main indicator light comes on.

WIRING DIAGRAM

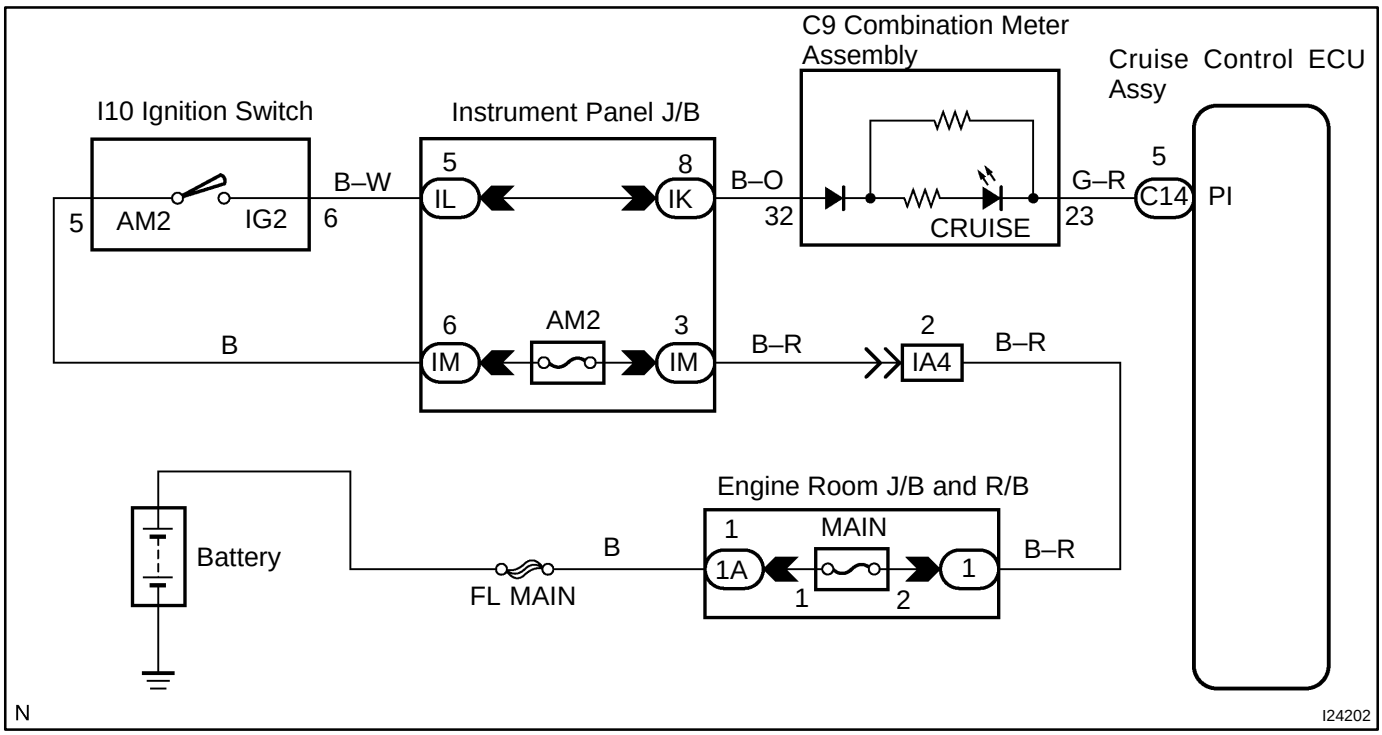

INSPECTION PROCEDURE

1	INSPECT TERMINAL VOLTAGE(PI)

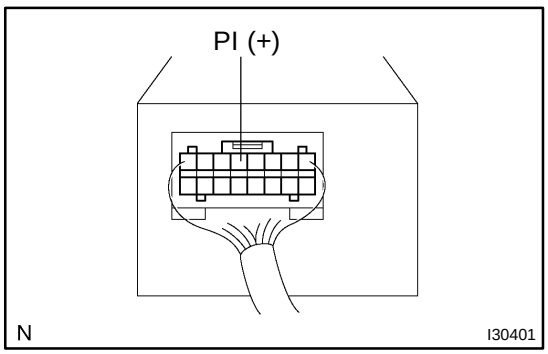

(a) Turn the ignition switch to ON.

(b) Measure voltage between terminal 5 (PI) of cruise control ECU assy and body ground, when the cruise control main switch button is ON and OFF.

OK:

Cruise Control Switch Button Position	Voltage
OFF	10 – 16 V
ON	Below 1.2 V

OK → **PROCEED TO NEXT CIRCUIT INSPECTION SHOWN ON PROBLEM SYMPTOMS TABLE (See page 05–754)**

NG

2	INSPECT COMBINATION METER ASSY (See page 05–638)

NG → REPLACE COMBINATION METER ASSY

OK

3	CHECK HARNESS AND CONNECTOR(BETWEEN CRUISE CONTROL ECU ASSY AND COMBINATION METER ASSEMBLY)

(a) Check for open and short circuit in harness and connector between cruise control ECU assy and combination meter assembly (See page 01–30).

NG → REPAIR OR REPLACE HARNESS OR CONNECTOR

OK

CHECK AND REPLACE CRUISE CONTROL ECU ASSY (See page 01–30)

057SB–01

CUSTOMER PROBLEM ANALYSIS CHECK

CRUISE CONTROL SYSTEM Check Sheet

Inspector's name:_____

Customer's Name		**Registration No.**	
		Registration Year	
		Frame No.	
Date Vehicle Brought in	/ /	**Odometer Reading**	**km Mile**

Condition of Problem Occurrence	**Date of Problem Occurrence**	/ /
	How Often does Problem Occur?	☐ Continuous ☐ Intermittent (Times a day)
	Vehicle Speed when Problem Occurred	**km Mile**

Symptoms	☐ Auto cancel occurs	●Driving condition ☐ City driving ☐ Freeway ☐ Up hill ☐ Down hill ●After cancel occurred, did the driver activate cruise control again? ☐ Yes ☐ No
	☐ Cancel does not occur	☐ Brake pedal depressed ☐ Except D position shift (A/T) ☐ Clutch pedal depressed (M/T) ☐ At 40km/h (25 mph) or less ☐ When control main switch turns to CANCEL position
	☐ Cruise control malfunction	☐ Slip to acceleration side ☐ Slip to deceleration side ☐ Hunting occurs ☐ O/D cut off does not occur ☐ O/D does not return
	☐ Switch malfunction	☐ SET ☐ ACCEL ☐ COAST ☐ RESUME ☐ CANCEL
	☐ CRUISE main indicator light	☐ Remains ON ☐ Does not light up ☐ Blinking

DTC Check	**1st Time**	☐ Normal Code ☐ Malfunction Code (Code)
	2nd Time	☐ Normal Code ☐ Malfunction Code (Code)

DIAGNOSIS CIRCUIT

CIRCUIT DESCRIPTION

This circuit sends a signal to the cruise control ECU assy that DTC output is required.

WIRING DIAGRAM

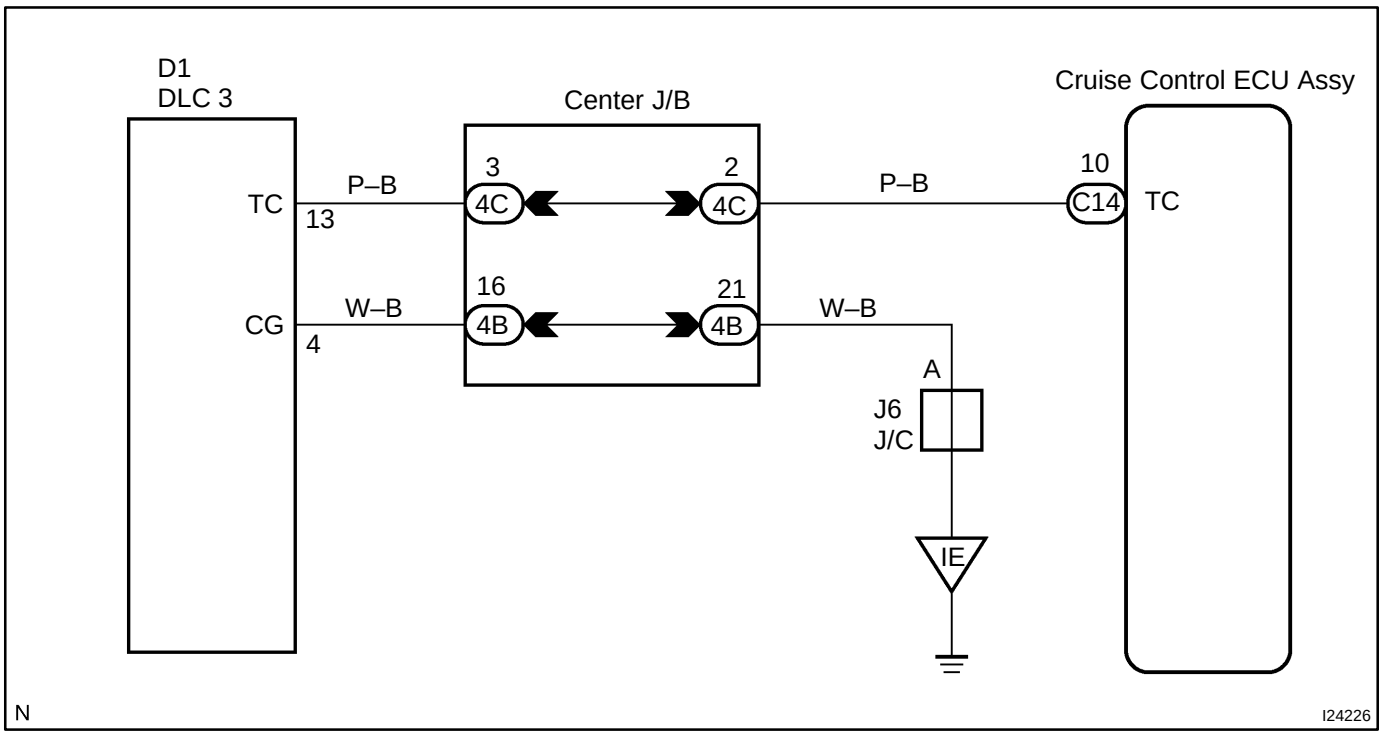

INSPECTION PROCEDURE

1	INSPECT DLC3 TERMINAL VOLTAGE

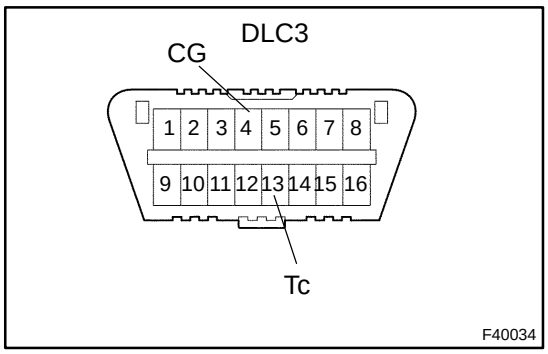

(a) Turn the ignition switch to ON.

(b) Measure voltage between terminals 13 (Tc) and 4 (CG) of DLC3.

OK:

Voltage: 10 – 16 V

OK → **PROCEED TO NEXT CIRCUIT INSPECTION SHOWN ON PROBLEM SYMPTOMS TABLE (See page 05–754)**

NG

2	CHECK HARNESS AND CONNECTOR(BETWEEN CRUISE CONTROL ECU ASSY AND DLC3)

(a) Check for open and short circuit in harness and connector between cruise control ECU assy and DLC3 (See page 01–30).

NG → REPAIR OR REPLACE HARNESS OR CONNECTOR

OK

CHECK AND REPLACE CRUISE CONTROL ECU ASSY (See page 01–30)

05270–05

DIAGNOSTIC TROUBLE CODE CHART

If a malfunction code is displayed during the DTC check, check the circuit listed for the code. For details of each code, turn to the page referred to under the ”See page” for respective ”DTC No.” in the DTC chart.

DTC No. (See Page)	Detection Item	Trouble Area
11 (05–755)	• Short in actuator motor circuit.	• Cruise control actuator assy (Actuator motor) • Actuator motor circuit • Cruise control ECU assy
12 (05–757)	• Short in actuator magnetic clutch circuit. • Open (0.8 sec.) in actuator magnetic clutch circuit.	• STOP Fuse • Stop lamp switch assy • Cruise control actuator assy (Actuator magnetic clutch) • Actuator magnetic clutch circuit • Cruise control ECU assy
15 (05–755)	• Open in actuator motor circuit.	• Cruise control actuator assy (Actuator motor)
14 (05–760)	• Cruise control actuator assy mechanical malfunction.	• Cruise control actuator assy (Actuator motor) (Actuator lock: motor, arm) • Cruise control ECU assy
21 (05–763)	• Speed signal is not input to the cruise control ECU assy while cruise control is set.	• Combination meter assembly • Vehicle speed sensor • Vehicle speed sensor circuit • Cruise control ECU assy
23 (05–763)	• Vehicle speed sensor pulse is abnormal.	• Vehicle speed sensor • Cruise control ECU assy
41	• Cruise control ECU	• Cruise control ECU assy
42	• Source voltage drop	• Power source
51 (05–765)	• Short in idle signal circuit.	• Throttle position sensor • Idle signal circuit • ECM • Cruise control ECU assy

ELECTRONICALLY CONTROLLED TRANSMISSION COMMUNICATION CIRCUIT

CIRCUIT DESCRIPTION

When driving uphill under cruise control, in order to reduce the number of shifting due to ON–OFF overdrive operation and to provide smooth driving, when down shifting in the electronically controlled transmission occurs, a signal to prevent upshift until the end of the uphill slope is sent from the cruise control ECU assy to the electronically controlled transmission.

Terminal ECT of the cruise control ECU assy detects the shift change signal (output to electronically controlled transmission No.2 solenoid) from the ECM.

If the vehicle slows down, also when terminal ECT of the cruise control ECU assy receives down shifting signal, it sends a signal from terminal OD to ECM to cut overdrive until the end of the uphill slope, and the number of gear shifts are reduced and gear shift points in the electronically controlled transmission are changed.

WIRING DIAGRAM

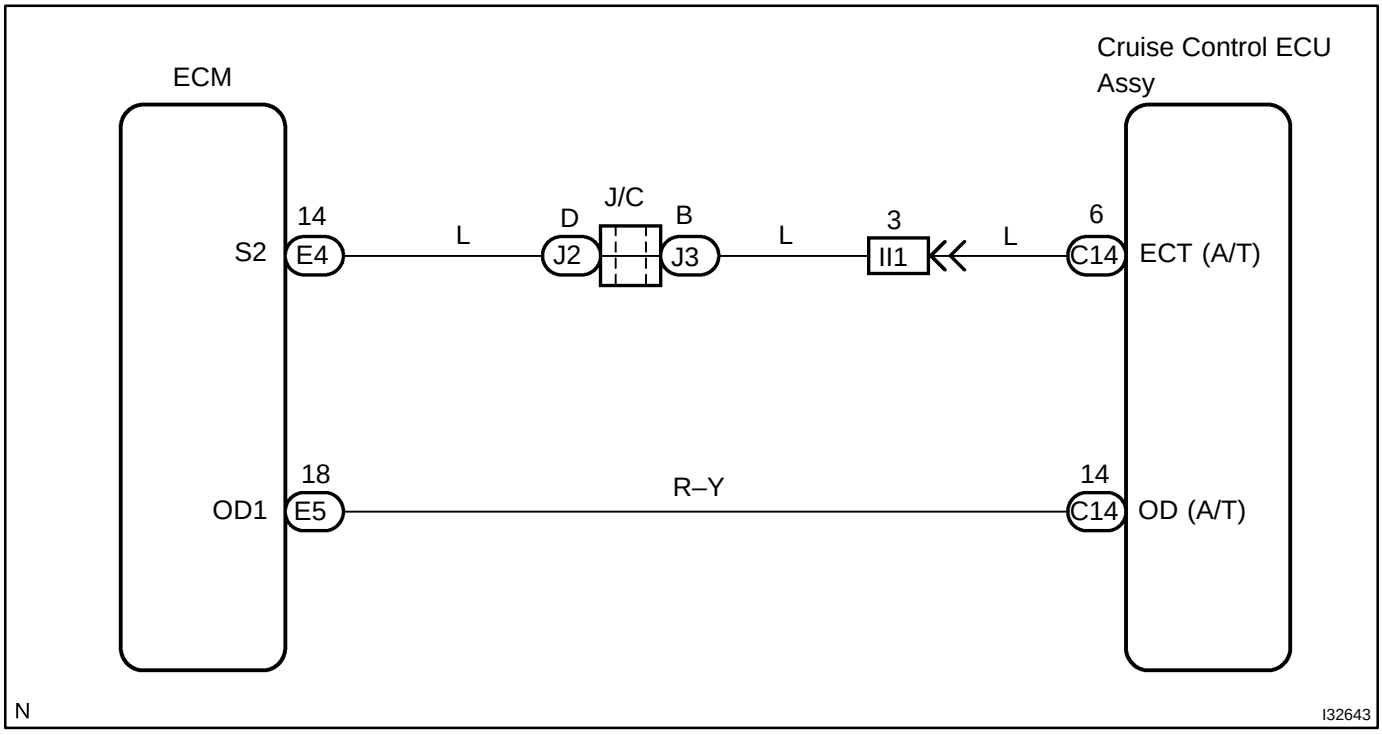

INSPECTION PROCEDURE

1	CHECK OPERATION(OVERDRIVE)

(a) Drive the vehicle after the engine warms up.
(b) Check that overdrive ON ↔ OFF occurs by an operation of the O/D switch ON–OFF.

NO → **GO TO ELECTRONIC CONTROLLED AUTOMATIC TRANSMISSION[ECT]**

YES

2	INSPECT TERMINAL VOLTAGE(OD)

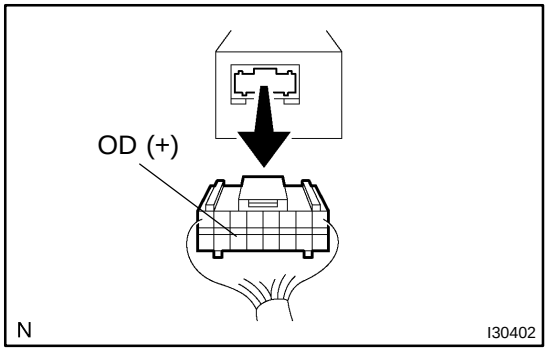

(a) Remove the cruise control ECU assy with the connector still connected.
(b) Turn the ignition switch to ON.
(c) Disconnect the cruise control ECU assy connector.
(d) Measure voltage between terminal 14 (OD) of harness side connector of cruise control ECU assy and body ground.
OK:
Voltage: 10 – 14 V

NG → **Go to step 5**

OK

3	INSPECT TERMINAL VOLTAGE(ECT)

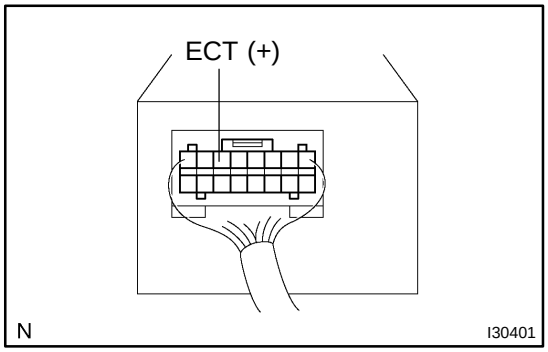

(a) Connect the cruise control ECU assy connector.
(b) Perform the test drive after engine warms up.
(c) Check voltage between terminal 6 (ECT) of cruise control ECU assy connector and body ground when O/D switch is ON and OFF.
OK:

O/D Switch Position	Voltage
ON	Below 0.5 V
OFF	8 – 16 V

OK → **PROCEED TO NEXT CIRCUIT INSPECTION SHOWN ON PROBLEM SYMPTOMS TABLE (See page 05–754)**

NG

4	CHECK HARNESS AND CONNECTOR(BETWEEN CRUISE CONTROL ECU ASSY AND ELECTRONICALLY CONTROLLED TRANSMISSION SOLENOID)

(a) Check for open and short circuit in harness and connector between cruise control ECU assy and electronically controlled transmission solenoid (See page 01–30).

NG → REPAIR OR REPLACE HARNESS OR CONNECTOR

OK

CHECK AND REPLACE CRUISE CONTROL ECU ASSY (See page 01–30)

5	CHECK HARNESS AND CONNECTOR(BETWEEN CRUISE CONTROL ECU ASSY AND ECM)

(a) Check for open and short circuit in harness and connector between cruise control ECU assy and ECM (See page 01–30).

NG → REPAIR OR REPLACE HARNESS OR CONNECTOR

OK

CHECK AND REPLACE CRUISE CONTROL ECU ASSY (See page 01–30)

ECU POWER SOURCE CIRCUIT

CIRCUIT DESCRIPTION

The cruise control ECU assy power source supplies power to the actuator and sensors, etc., when terminal GND and the case of the cruise control ECU assy are grounded.

WIRING DIAGRAM

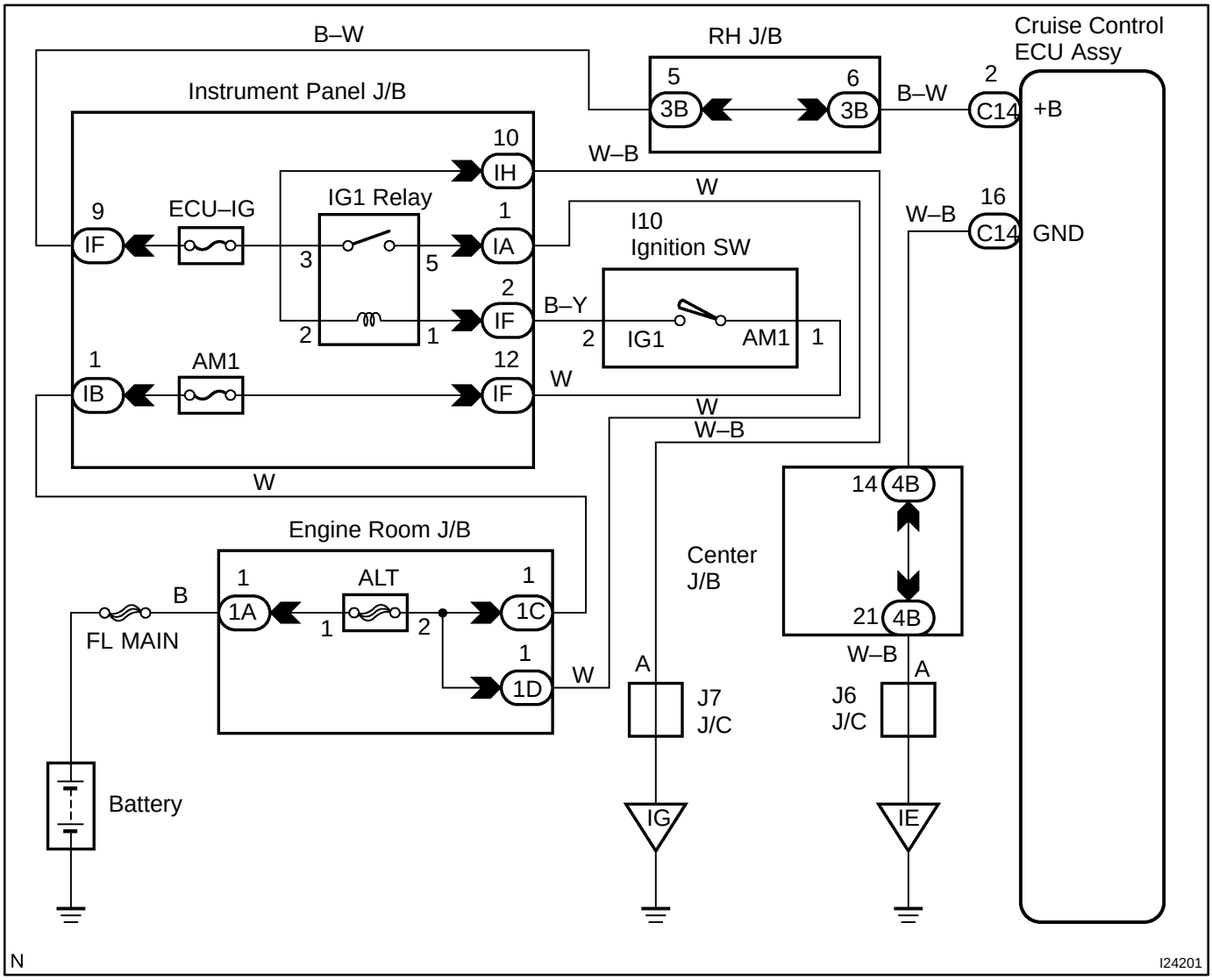

INSPECTION PROCEDURE

1	CHECK FUSE(ECU–IG)

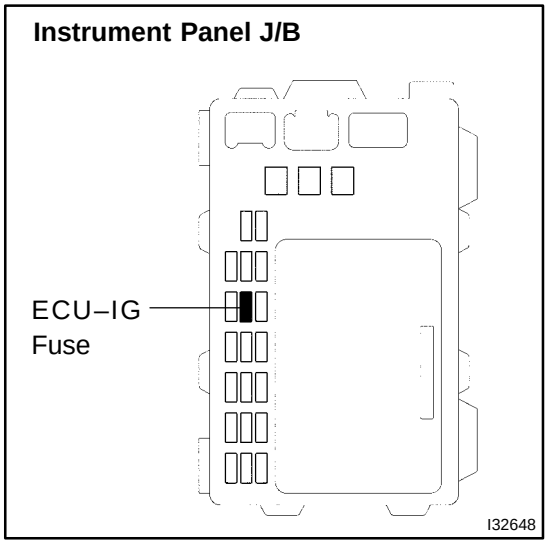

(a) Remove the ECU–IG fuse from the instrument panel J/B.
(b) Check the continuity of the ECU–IG fuse.
OK: Continuity

NG → **REPLACE FUSE**

OK

2	INSPECT TERMINAL VOLTAGE(B)

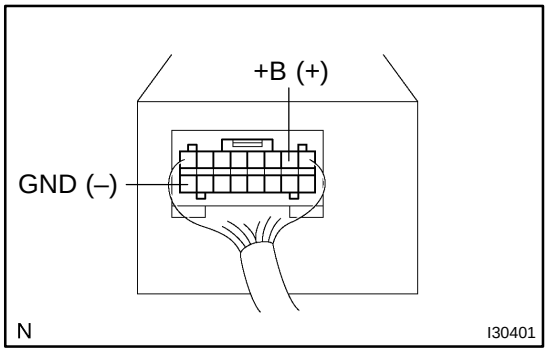

(a) Remove the cruise control ECU assy with connector still connected.
(b) Turn the ignition switch to ON.
(c) Measure voltage between terminals 2 (B) and 16 (GND) of the cruise control ECU assy connector.
OK:
Voltage: 10 – 16 V

OK → **PROCEED TO NEXT CIRCUIT INSPECTION SHOWN ON PROBLEM SYMPTOMS TABLE (See page 05–754)**

NG

3	CHECK HARNESS AND CONNECTOR(BETWEEN CRUISE CONTROL ECU ASSY AND BODY GROUND)

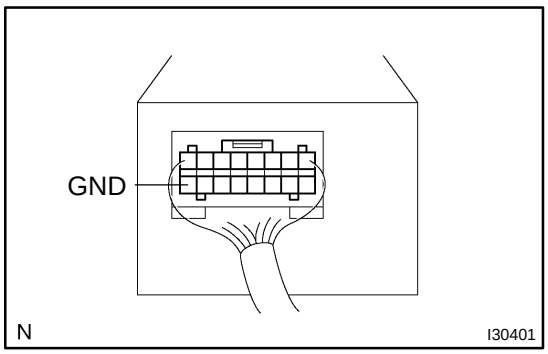

(a) Measure resistance between terminal 16 (GND) of the cruise control ECU assy connector and body ground.
OK:
Resistance: Below 1 Ω

NG → **REPAIR OR REPLACE HARNESS OR CONNECTOR**

OK

CHECK AND REPAIR HARNESS AND CONNECTOR BETWEEN CRUISE CONTROL ECU ASSY AND BATTERY

PARK/NEUTRAL POSITION SWITCH CIRCUIT

CIRCUIT DESCRIPTION

When the shift position is put in except D position, a signal is sent from the park/neutral position switch to the cruise control ECU assy. When this signal is input during cruise control driving, the ECU cancels the cruise control.

WIRING DIAGRAM

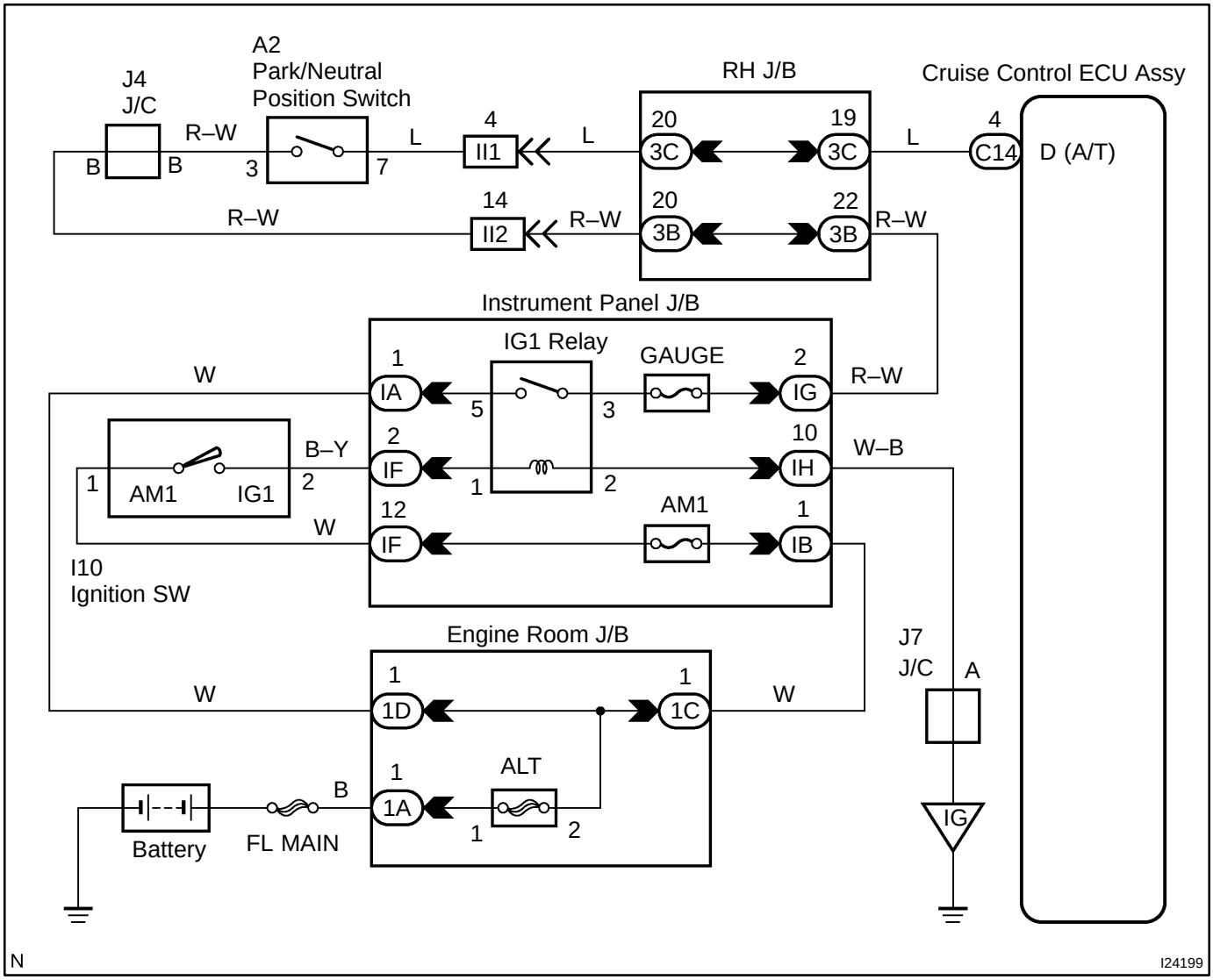

INSPECTION PROCEDURE

1 CHECK OPERATION(STARTER)

(a) Check that the starter operates normally and that the engine starts.

NO → **GO TO ENGINE TROUBLESHOOTING**

YES

2 INPUT SIGNAL CHECK

Input Signal	Indicator Light Blinking Pattern
Turn PNP Switch OFF (Shift to positions except D)	Light: ON — SW ON; OFF — SW OFF

(a) See input signal check on page 05–745.
(b) Check the indicator light when shifting into except D position.
OK:
The indicator light goes off when shifting into except D position.

OK → **PROCEED TO NEXT CIRCUIT INSPECTION SHOWN ON PROBLEM SYMPTOMS TABLE (See page 05–754)**

NG

3 INSPECT TERMINAL VOLTAGE(D)

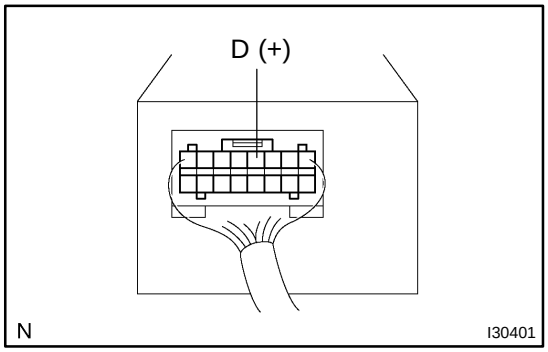

(a) Turn the ignition switch to ON.
(b) Measure voltage between terminal 4 (D) of cruise control ECU assy connector and body ground when shifting into D position and other positions.
OK:

Shift Position	Voltage
D position	10 – 16 V
Other positions	Below 1 V

OK → **PROCEED TO NEXT CIRCUIT INSPECTION SHOWN ON PROBLEM SYMPTOMS TABLE (See page 05–754)**

NG

4	CHECK HARNESS AND CONNECTOR(BETWEEN CRUISE CONTROL ECU ASSY AND PARK/NEUTRAL POSITION SWITCH)

(a) Check for open and short circuit in harness and connector between cruise control ECU assy and park/neutral position switch (See page 01–30).

NG → **REPAIR OR REPLACE HARNESS OR CONNECTOR**

OK

CHECK AND REPLACE CRUISE CONTROL ECU ASSY (See page 01–30)

05271–05

LOCATION

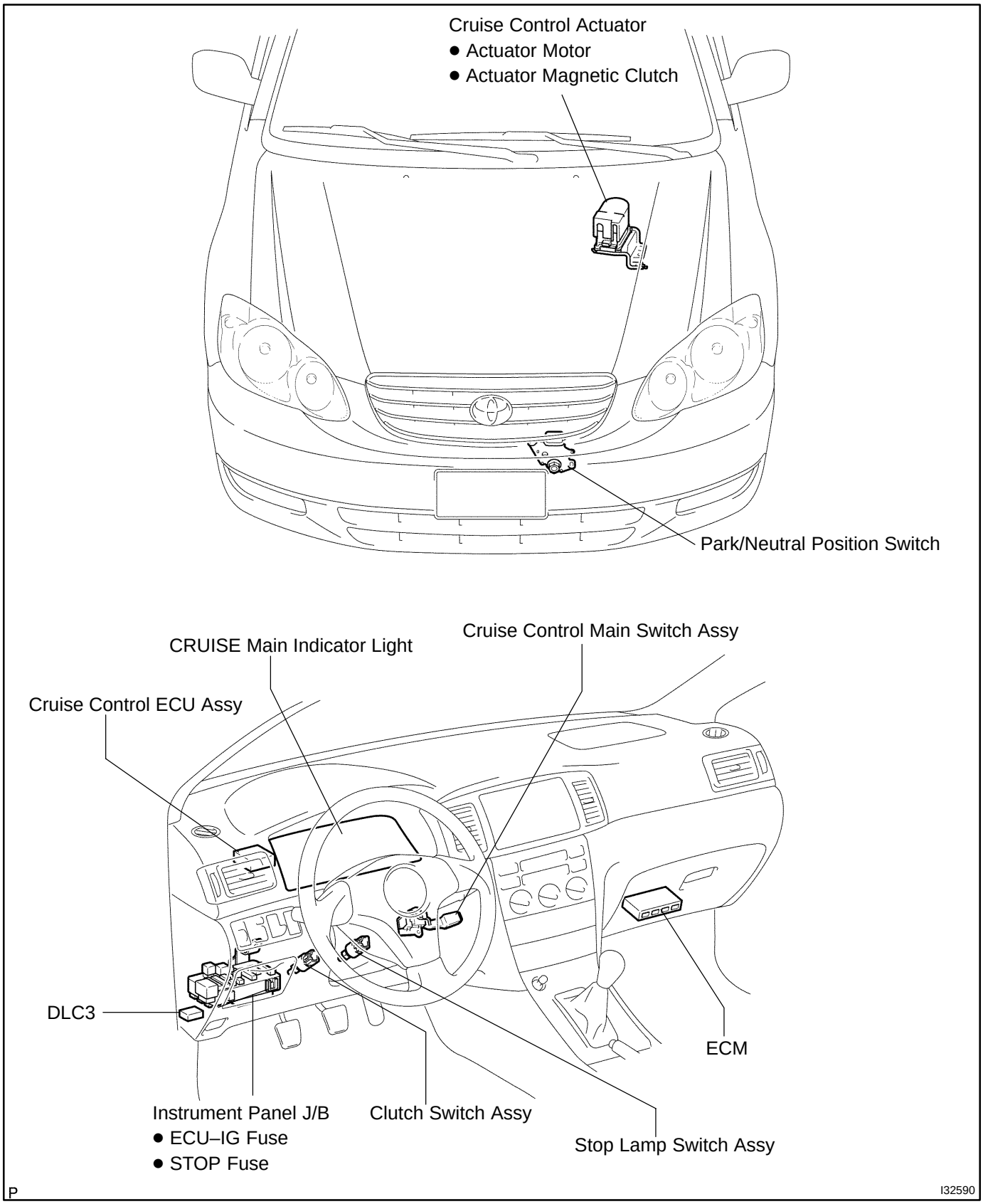

057SC–02

PRE–CHECK

1. PRE–CHECK

(a) Check that the cruise control actuator assy, acceleration wire, accelerator auto drive cable assy, and link assy are installed correctly and that the wire and link are securely connected.

(b) Check that the operating movement of the acceleration pedal, cruise control actuator assy, acceleration wire, accelerator auto drive cable assy and link is smooth.

(c) Adjust the acceleration auto drive cable assy and link system not to allow any play or excessive tension.

(d) Check that the cruise control ECU assy, cruise control actuator assy, cruise control main switch assy and connectors of each cancel switch are connected securely.

(e) When turning on the main switch of the cruise control main switch assy by pressing the button with the ignition switch to ON, check that the CRUISE main indicator light in the accessory meter assy lights up.

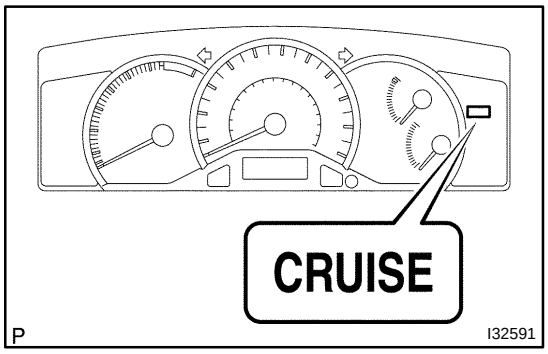

2. DIAGNOSIS SYSTEM

(a) Check the indicator.

(1) Turn the ignition switch to ON.

(2) Check that the CRUISE main indicator light comes on when the cruise control main switch button is turned ON, and that the indicator light goes off when the main switch button is turned OFF.

HINT:

If the indicator check result is not normal, proceed to troubleshooting (See page 05–638) for the combination meter section.

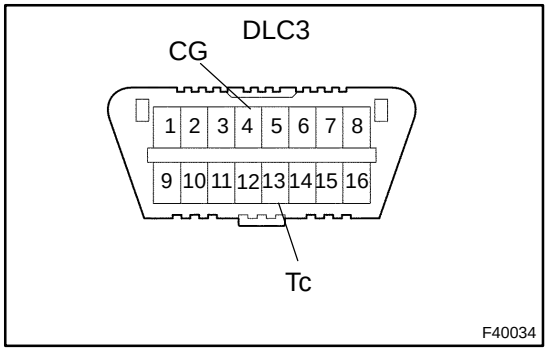

(b) Check the DTC using diagnosis check wire.

(1) Turn the ignition switch to ON.

(2) Using SST, connect terminals Tc and CG of DLC3.

SST 09843–18040

(3) Read the DTC on the CRUISE main indicator light.

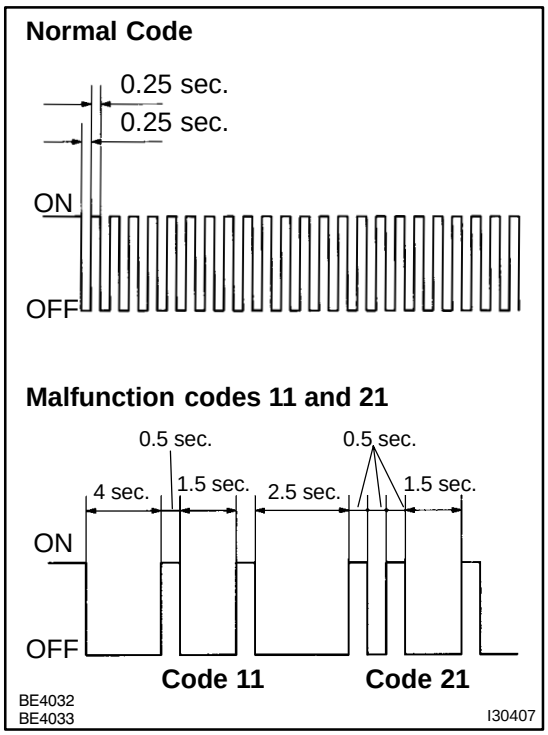

HINT:
If the DTC is not output, inspect the diagnosis circuit (See page 05–788).
As an example, the blinking patterns for codes are shown in the illustration; normal, 11 and 21.

3. USING HAND–HELD TESTER

(a) Hook up the hand–held tester to the DLC3.
(b) Monitor the ECU data by following the prompts on the tester screen.

HINT:
The hand–held tester has a ”Snapshot” function which records the monitored data.
Please refer to the hand–held tester operator’s manual for further details.

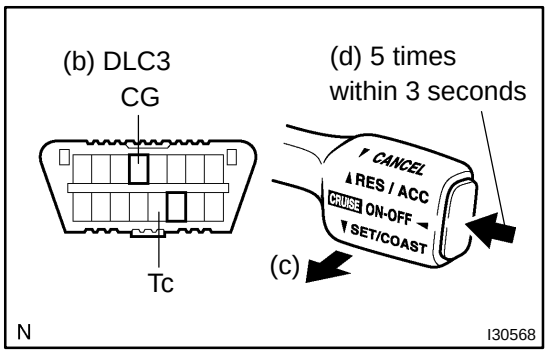

4. DTC CLEARANCE (ERASE MODE)

HINT:
During in the erase mode, diag detection does not work.

(a) Drive at about 15 km/h or below.
(b) Using SST, connect terminals Tc and CG of DLC3.
SST 09843–18040
(c) Pull the cruise control main switch assy to CANCEL.
(d) On the above mentioned condition, press on the cruise control main switch button 5 times within 3 seconds.

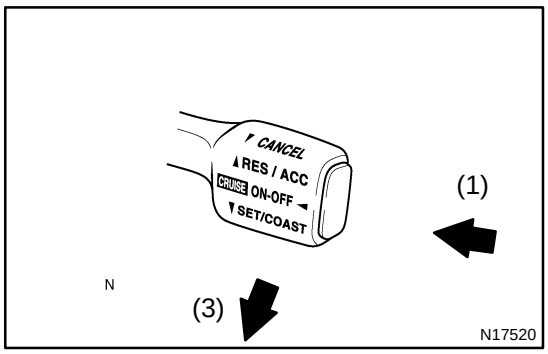

5. PROBLEM SYMPTOM CONFIRMATION (ROAD TEST)

(a) Inspect the SET switch.
- (1) Press the cruise control main switch button to ON.
- (2) Drive at a desired speed (40 km/h (25 mph) or higher).
- (3) Push down the cruise control main switch assy to the SET/COAST.
- (4) After releasing the switch, check that the vehicle cruises at the desired speed.

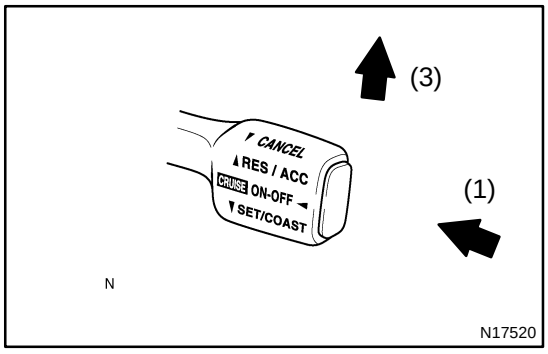

(b) Inspect the ACCEL switch.
- (1) Press the cruise control main switch button to ON.
- (2) Drive at a desired speed (40 km/h (25 mph) or higher).
- (3) Check that the vehicle speed is increases while the cruise control main switch assy is pull up to RES/ ACC, and that the vehicle cruises at the set speed when the switch is released.
- (4) Momentarily press the cruise control main switch assy upward, to the RES/ACC and then immediately release it. Check that the vehicle speed increases by about 1.5 km/h (Tap–up function).

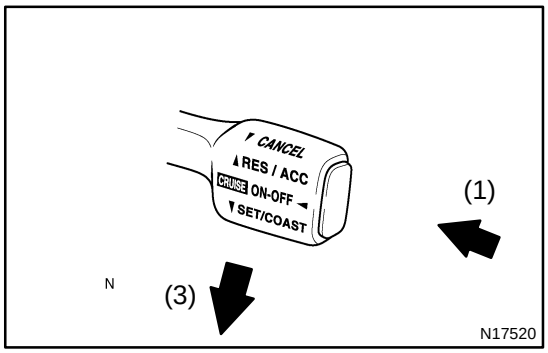

(c) Inspect the COAST switch.
- (1) Press the cruise control main switch button to ON.
- (2) Drive at a desired speed (40 km/h (25 mph) or higher).
- (3) Check that the vehicle speed is decreases while the cruise control main switch assy is push down to SET/COAST, and the vehicle cruises at the set speed when the switch is released.
- (4) Momentarily push the cruise control main switch assy downward to SET/COAST, and then immediately release it. Check that the vehicle speed decreases by about 1.5 km/h (Tap–down function).

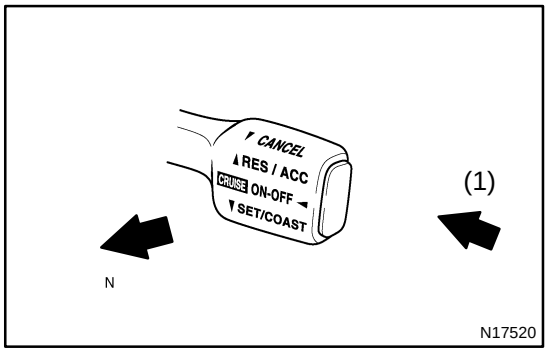

(d) Inspect the CANCEL switch.
- (1) Press the cruise control main switch button to ON.
- (2) Drive at a desired speed (40 km/h (25 mph) or higher).

(3) When operating one of the followings, check that the cruise control system is cancelled and that the normal driving mode is reset.
- Depress the brake pedal.
- Depress the clutch pedal (M/T).
- Shift to except D position (A/T).
- Press the cruise control main switch button to OFF.
- Pull the cruise control main switch assy to CANCEL.

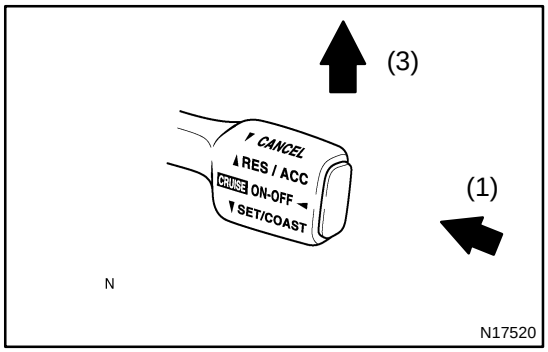

(e) Inspect the RESUME switch.
(1) Press the cruise control main switch button to ON.
(2) Drive at a desired speed (40 km/h (25 mph) or higher).
(3) When operating one of the followings, check that the cruise control system is cancelled and that the normal driving mode is reset.
- Depress the brake pedal.
- Depress the clutch pedal (M/T).
- Shift to except D position (A/T).
- Pull the cruise control main switch assy to CANCEL.

(4) After the cruise control main switch assy is pull up to RES/ACC at the driving speed of more than 40 km/h (25 mph), check that the vehicle restores the speed before the cancellation.

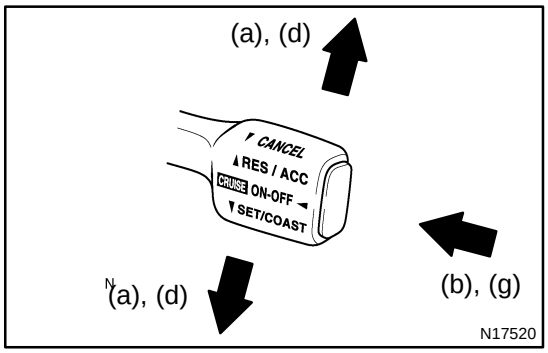

6. INPUT SIGNAL CHECK

HINT:
- For check No.1 ~ No.3
  Turn the ignition switch to ON.
- For check No.4
  Jack up the vehicle.
  Start the engine.
  Release the clutch pedal (M/T).
  Shift to D position (A/T).

(a) Keep the cruise control main switch assy to SET/COAST or RES/ACC position and hold it down or hold it up.
(b) Press the cruise control main switch button to ON.
(c) Check that the CRUISE main indicator light blinks twice or 3 times repeatedly after 3 seconds.
(d) Turn the SET/COAST or RES/ACC switch to OFF.
(e) Operate each switch as listed in the table below.
(f) Read the blinking pattern of the CRUISE main indicator light.
(g) After performing the check, turn the cruise control main switch button to OFF.

HINT:
When 2 or more signals are input to the cruise control ECU assy, the lowest numbered code will be displayed first.

No.	Operation Method	CRUISE main Indicator Light Blinking Pattern	Diagnosis
1	Turn SET/COAST switch ON	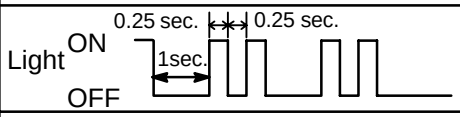	SET/COAST switch circuit is normal
2	Turn RES/ACC switch ON		RES/ACC switch circuit is normal
3	Turn CANCEL switch ON	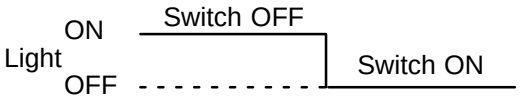	CANCEL switch circuit is normal
	Depress brake pedal (Turn stop lamp switch assy ON)		Stop light switch circuit is normal
	Shift to except D position (Turn PNP switch OFF)	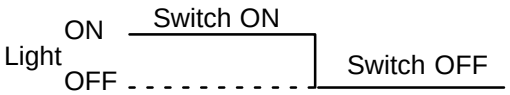	PNP switch circuit is normal
	Depress clutch pedal (Turn clutch switch assy OFF)		Clutch switch circuit is normal
4	Drive at about 40 km/h (25 mph) or higher	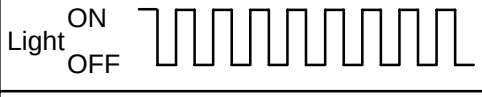	Vehicle speed sensor is normal
	Drive at about 40 km/h (25 mph) or below	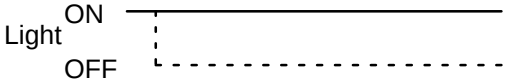	

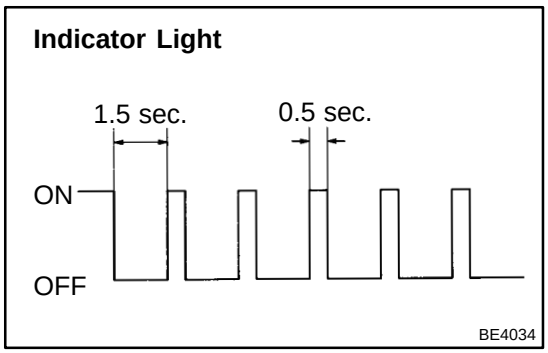

7. AUTO CANCEL FUNCTION

(a) If a malfunction occurs in the No.1 vehicle speed sensors or actuator, etc. during cruise control driving, the ECU actuates AUTO CANCEL of the cruise control and turns ON and OFF the CRUISE main indicator light to inform the driver of a malfunction. At the same time, the malfunction is stored in memory as a diagnostic trouble code.

STOP LIGHT SWITCH CIRCUIT

CIRCUIT DESCRIPTION

When the brake pedal is depressed, the stop lamp switch assy sends a signal to the cruise control ECU assy. When the cruise control ECU assy receives this signal, it cancels the cruise control.
A fail–safe function is provided so that CANCEL functions normally, even if there is a malfunction in the stop light switch circuit.
The cancel conditions are: Battery positive voltage at terminal STP–.
When the brake pedal is depressed, normal battery positive voltage normally is applied through the STOP fuse and stop lamp switch assy to terminal STP– of the cruise control ECU assy, and the cruise control ECU assy turns the cruise control to off.
If the harness connected to terminal STP– has an open circuit, terminal STP– will have battery positive voltage and the cruise control will be turned off.
Also, when the brake pedal is depressed, the magnetic clutch circuit is cut mechanically by the stop lamp switch assy, turning the cruise control OFF.

WIRING DIAGRAM

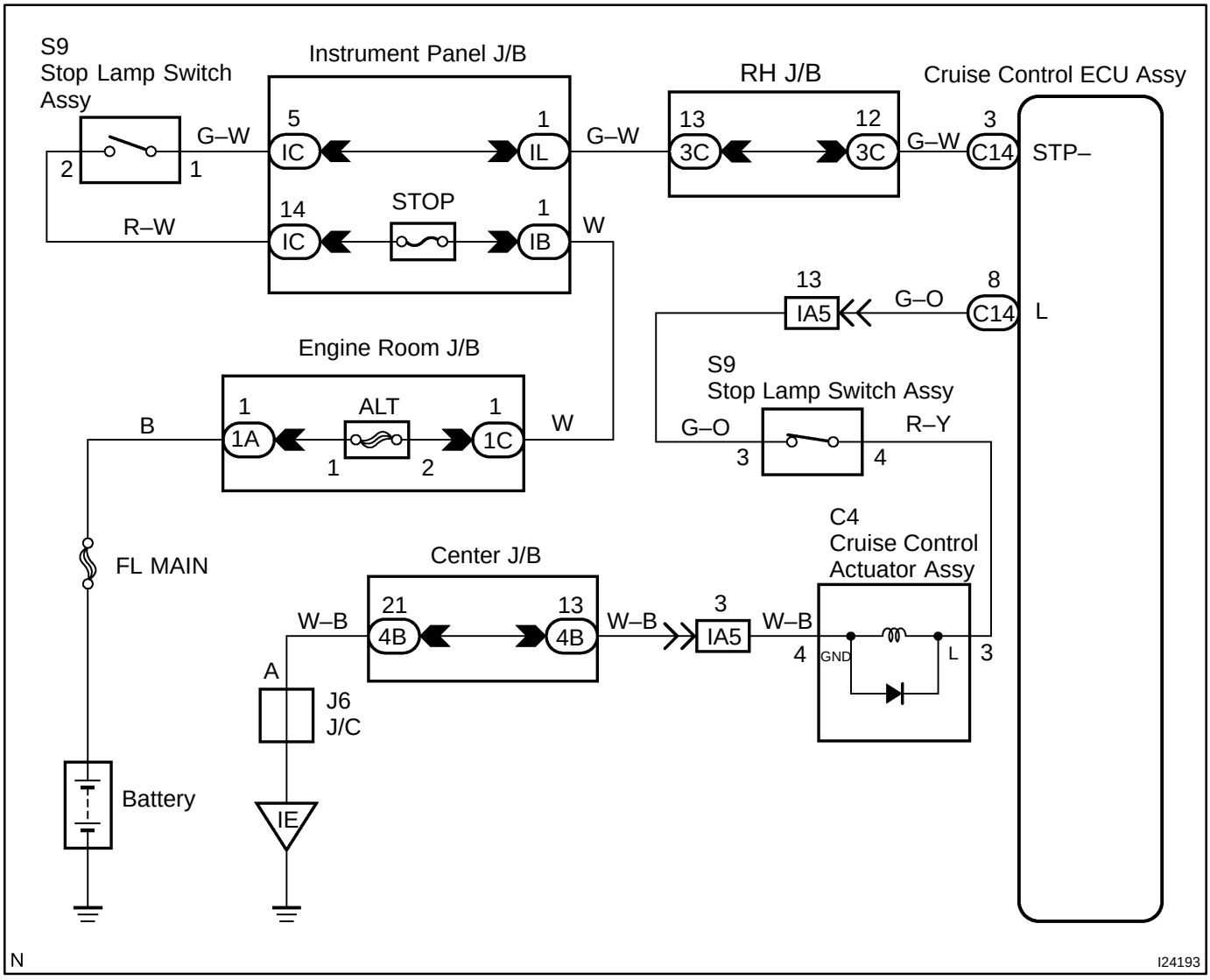

INSPECTION PROCEDURE

1 CHECK OPERATION(STOP LAMP SWTICH ASSY)

(a) Check that the stop light comes on when the brake pedal is depressed, and turns off when the brake pedal is released.

NO → **INSPECT STOP LAMP CIRCUIT**

YES

2 INPUT SIGNAL CHECK

Input Signal	Indicator Light Blinking Pattern
Stop Lamp Switch ON	Light: ON / OFF; SW OFF → SW ON

(a) See input signal check on page 05–745.
(b) Check the indicator light when the brake pedal is depressed.
OK:
The indicator light goes off when the brake pedal is depressed.

OK → **PROCEED TO NEXT CIRCUIT INSPECTION SHOWN ON PROBLEM SYMPTOMS TABLE (See page 05–754)**

NG

3 INSPECT TERMINAL VOLTAGE(STP–)

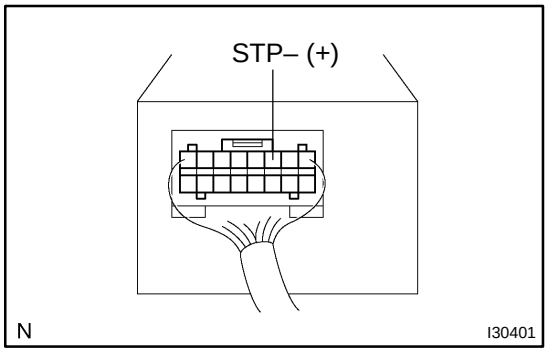

(a) Remove the cruise control ECU assy with connectors still connected.
(b) Turn the ignition switch to ON.
(c) Measure voltage between terminal 3 (STP–) of cruise control ECU assy connector and body ground, when the brake pedal is depressed and released.
OK:

Brake Pedal	Voltage
Depressed	10 – 16 V
Released	Below 1 V

NG → **PROCEED TO NEXT CIRCUIT INSPECTION SHOWN ON PROBLEM SYMPTOMS TABLE (See page 05–754)**

OK

4	CHECK HARNESS AND CONNECTOR(BETWEEN CRUISE CONTROL ECU ASSY AND STOP LAMP SWITCH ASSY)

(a) Check for open and short circuit in harness and connector between cruise control ECU assy and stop lamp switch assy (See page 01–30).

NG → **REPAIR OR REPLACE HARNESS OR CONNECTOR**

OK

CHECK AND REPLACE CRUISE CONTROL ECU ASSY (See page 01–30)

05273–06

PROBLEM SYMPTOMS TABLE

If a normal code is displayed during the DTC check but the problem still occurs, check the circuits for each problem, symptom in the order given in the table below and proceed to the relevant troubleshooting page.

Symptom	Suspect Area	See page
SET not occurring or CANCEL occurring. (DTC is Normal)	1. Cruise control main switch circuit (Cruise control switch) 2. Vehicle speed sensor circuit 3. Stop lamp switch circuit 4. Park/neutral position switch circuit (A/T) Clutch switch circuit (M/T) 5. Actuator motor circuit 6. Cruise control cable 7. Cruise control ECU assy	05–786 05–763 05–767 05–773 05–776 82–1 01–30
SET not occurring or CANCEL occurring. (DTC dose not output)	1. ECU power source circuit 2. Cruise control ECU assy	05–779 01–30
Actual vehicle speed deviates above or below the set speed.	1. Cruise control cable 2. Vehicle speed signal abnormal 3. Electronically controlled transmission communication circuit (A/T) 4. Actuator motor circuit 5. Idle signal circuit (Main throttle position sensor) 6. Cruise control ECU assy	82–1 05–763 05–770 05–755 05–765 01–30
A/T: Gear shifting frequent between 3rd and O/D when driving on uphill road. (Hurting)	1. Electronically controlled transmission communication circuit 2. Cruise control ECU assy	05–770 01–30
Cruise control not cancelled, even when brake pedal is de-pressed.	1. Cruise control cable 2. Stop lamp switch circuit 3. Actuator motor circuit 4. Cruise control ECU assy	82–1 05–767 05–755 01–30
A/T: Cruise control not cancelled, even when transmission is shifted to ”N” position.	1. Cruise control cable 2. Park/neutral position switch circuit 3. Actuator motor circuit 4. Cruise control ECU assy	82–1 05–773 05–755 01–30
Control switch does not operate. (SET/COAST, ACC/RES, CANCEL not possible)	1. Cruise control cable 2. Actuator motor circuit 3. Cruise control ECU assy	82–1 05–755 01–30
SET possible at 40 km/h (25 mph) or less, or CANCEL does not operate at 40 km/h (25 mph) or less.	1. Cruise control cable 2. Vehicle speed signal abnormal 3. Actuator motor circuit 4. Cruise control ECU assy	82–1 05–763 05–755 01–30
Poor response is ACCEL and RESUME modes.	1. Cruise control cable 2. Electronically controlled transmission communication circuit (A/T) 3. Actuator motor circuit 4. Cruise control ECU assy	82–1 05–770 05–755 01–30
A/T: O/D does not RESUME, even though the road is not uphill.	1. Electronically controlled transmission communication circuit 2. Cruise control ECU assy	05–770 01–30
DTC memory is erased.	1. Cruise control ECU assy	01–30
DTC is not output, or is output when it should not be.	1. Diagnosis circuit 2. Cruise control ECU assy	05–788 01–30
Cruise main indicator light remains ON or falls to light up.	1. Cruise main indicator light circuit 2. Cruise control ECU assy	05–786 01–30

057SD–02

TERMINALS OF ECU

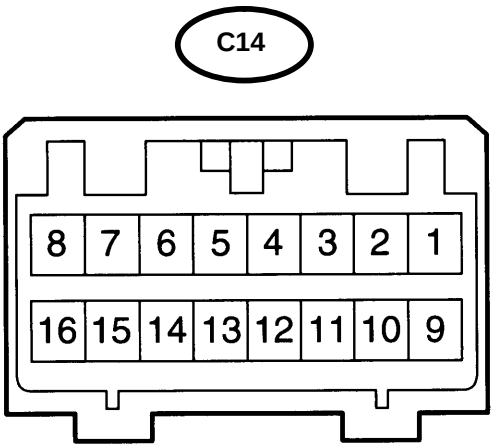

I30419

Symbols (Terminals No.)	Wiring Color	Condition	STD Voltage (V)
+B ↔ GND (C14–2 ↔ C14–16)	B–W ↔ W–B	Ignition switch ON	10 – 16
STP– ↔ GND (C14–3 ↔ C14–16)	G–W ↔ W–B	Depress brake pedal	10 – 16
		Release brake pedal	Below 1
D ↔ GND (C14–4 ↔ C14–16)	L ↔ W–B	• Depress clutch pedal (M/T) • Shift to except D position (A/T)	Below 1
		• Release clutch pedal (M/T) • Shift to D position (A/T)	10 – 16
PI ↔ GND (C14–5 ↔ C14–16)	G–R ↔ W–B	Ignition switch ON Cruise control main switch button ON	Below 1.2
		Ignition switch ON Cruise control main switch button OFF	10 – 16
ECT (A/T) ↔ GND (C14–6 ↔ C14–16)	L ↔ W–B	During driving Gear position 3rd	Below 1
		During driving Gear position O/D	8 – 16
MC ↔ GND (C14–7 ↔ C14–16)	R–L ↔ W–B	During cruise control driving COAST switch held ON	9 – 15
		During cruise control driving ACC switch held ON	Below 1
L ↔ GND (C14–8 ↔ C14–16)	G–O ↔ W–B	During cruise control driving	9 – 15
		Except during cruise control driving	Below 1
TC ↔ GND (C14–10 ↔ C14–16)	P–B ↔ W–B	Ignition switch ON	10 – 16
		Ignition switch ON Connect terminals Tc and CG of DLC3	Below 2
CCS ↔ GND (C14–11 ↔ C14–16)	G–Y ↔ W–B	Ignition switch ON	10 – 16
		Ignition switch ON Cruise control main switch button held ON	Below 0.5
		Ignition switch ON CANCEL switch held ON	6.6 – 11.4
		Ignition switch ON SET/COAST switch held ON	4.5 – 8.1
		Ignition switch ON RES/ACC switch held ON	2.3 – 4.5

SPD ↔ GND (C14–12 ↔ C14–16)	V–W ↔ W–B	Engine start → Car stoppage.	Below 1.5 → 4.7 – 16
		During driving (Pulse generated).	3 – 7
IDL ↔ GND (C14–13 ↔ C14–16)	L–W ↔ W–B	Ignition switch ON Throttle valve fully opened.	10 – 16
		Ignition switch ON Throttle valve fully closed.	Below 1.5
OD (A/T) ↔ GND (C14–14 ↔ C14–16)	R–Y ↔ W–B	During cruise control driving O/D switch ON.	0 – 16 (*1)
		During cruise control driving O/D switch OFF (3rd driving)	Below 1
MO ↔ GND (C14–15 ↔ C14–16)	R–G ↔ W–B	During cruise control driving ACC switch held ON	9 – 15
		During cruise control driving COAST switch held ON	Below 1
GND ↔ Body Ground (C14–16 ↔ Body Ground)	W–B ↔ Body Ground	Constant	Below 1

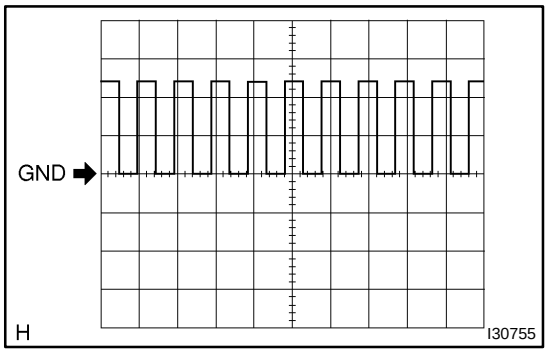

Oscilloscope wave (*1)
HINT:

- Terminal: OD – GND
- Gauge set: 5 V / DIV, 50 ms / DIV
- Condition: During cruise control driving O/D switch ON.

CRUISE CONTROL SYSTEM

0526X–05

HOW TO PROCEED WITH TROUBLESHOOTING

1	VEHICLE BROUGHT TO WORKSHOP

2	CUSTOMER PROBLEM ANALYSIS (See page 05–744)

3	CHECK AND CLEAR DTC (See page 05–745)

4	PROBLEM SYMPTOM CONFIRMATION

- SYMPTOM DOES NOT OCCUR (GO TO STEP 5)
- SYMPTOM OCCUR (GO TO STEP 6)

5	SYMPTOM SIMULATION (See page 01–20)

6	DTC CHECK (See page 05–745)

- MALFUNCTION CODE (GO TO STEP 7)
- NORMAL CODE (GO TO STEP 8)

7	DTC CHART (See page 05–750)

- GO TO STEP 9

8	PROBLEM SYMPTOMS TABLE (See page 05–754)

9	CIRCUIT INSPECTION (See page 05–755 – 05–788)

10	IDENTIFICATION OF PROBLEM

11	PARTS INSPECTION

12	REPAIR

13	CONFIRMATION TEST

END

ALL DOOR LOCK AND UNLOCK DO NOT OPERATE BY THE MASTER SWITCH OR THE DRIVER'S DOOR KEY

CIRCUIT DESCRIPTION

The integration relay receives a switch signal from the master switch, door lock control switch or the driver's door key and then drives the door lock motor.

WIRING DIAGRAM

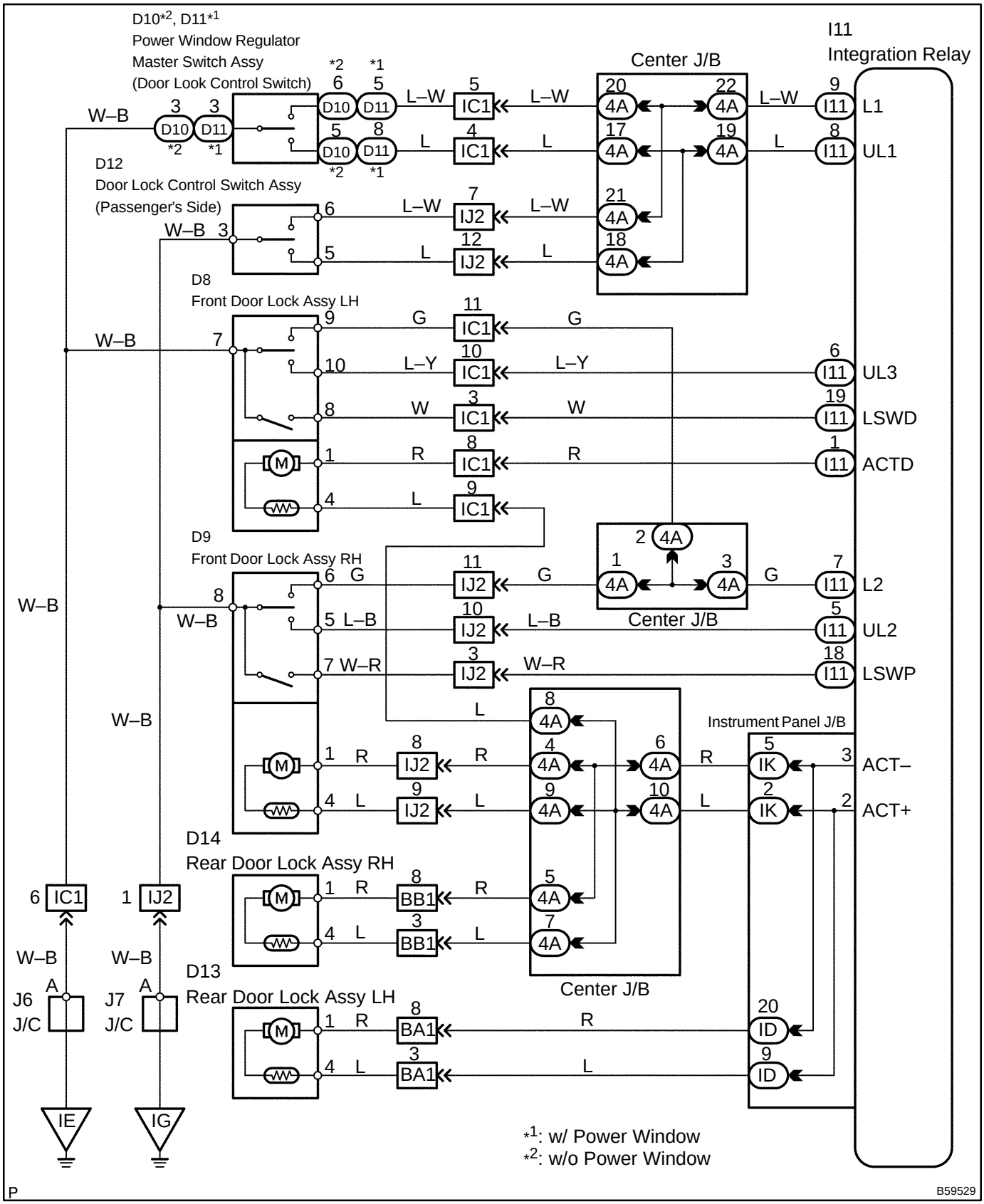

INSPECTION PROCEDURE

1	CHECK DOOR LOCK

(a) When the door does not operate manually, proceed to ”A”.
(b) When the door does not operate via the key, proceed to ”B”.

B → **Go to step 4**

A

2	INSPECT DOOR LOCK CONTROL SWITCH

w/ Power Window

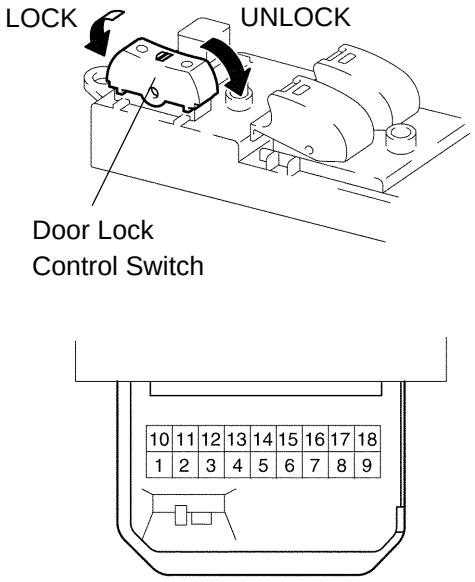

w/o Power Window

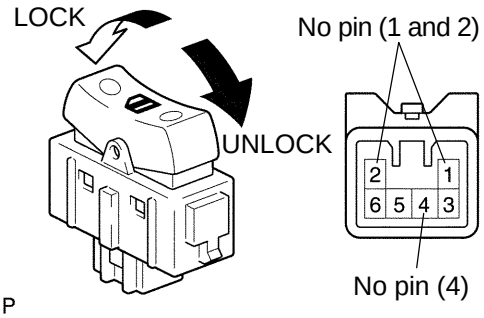

B59539
B59538
B59540

(a) w/ Power window:
Remove the power window regulator master switch assy.
(1) Inspect the master switch (door lock control switch) continuity, as shown in the illustration and table.

Standard:

Switch position	Terminal No.	Specified condition
Lock	1 ⇔ 3 ⇔ 5	Continuity
OFF	–	–
Unlock	1 ⇔ 3 ⇔ 8	Continuity

(b) w/o Power window:
Remove the door lock control switch.
(1) Inspect the door lock control switch continuity, as shown in the illustration and table.

Standard:

Switch position	Terminal No.	Specified condition
Lock	3 ⇔ 6	Continuity
OFF	–	–
Unlock	3 ⇔ 5	Continuity

NG → **REPLACE POWER WINDOW REGULATOR MASTER SWITCH ASSY (W/ POWER WINDOW)**

NG → **REPLACE DOOR LOCK CONTROL SWITCH (W/O POWER WINDOW)**

OK

3 CHECK WIRE HARNESS (SWITCH ⇔ INTEGRATION RELAY)

Integration Relay (Instrument Panel J/B)
(Wire Harness Side)

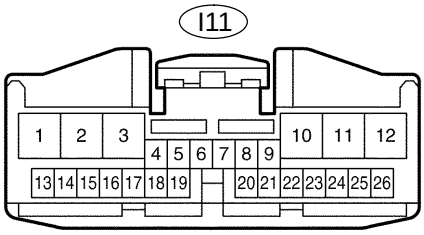

P

w/ Power Window

Master Switch (Wire Harness Side)

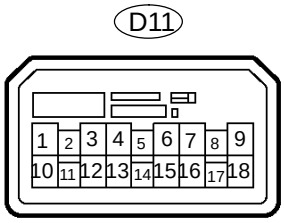

w/o Power Window

Door Lock Control Switch
(Wire Harness Side)

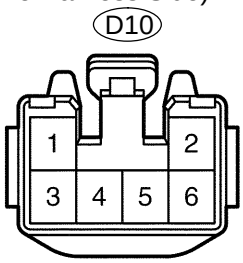

B59533

(a) w/ Power window:
Disconnect the power window regulator master switch assy and integration relay connectors.
w/o Power window:
Disconnect the door lock control switch and integration relay connectors.

(b) Check the continuity between the terminals of the power window regulator master switch assy or door lock control switch and integration relay connectors, as shown in the illustration and tables.

[w/ Power Window]

Standard (Check for open):

Symbols (Terminal No.) (Master switch ⇔ Integration relay)	Specified condition
L (D11–5) ⇔ L1 (I11–9)	Continuity
UL (D11–8) ⇔ UL1 (I11–8)	
E (D11–1) ⇔ Body ground	
E (D11–3) ⇔ Body ground	

[w/o Power Window]

Standard (Check for open):

Symbols (Terminal No.) (Door lock control switch ⇔ Integration relay)	Specified condition
L (D10–6) ⇔ L1 (I11–9)	Continuity
UL (D10–5) ⇔ UL1 (I11–8)	
E (D10–3) ⇔ Body ground	

OK	**REPLACE INTEGRATION RELAY**
NG	**REPAIR OR REPLACE WIRE HARNESS AND CONNECTOR**

4	INSPECT DRIVER'S DOOR LOCK (See page 73–3)

(a) Inspect the driver's door lock key switch.
(b) Inspect the driver's door lock position switch.

NG → REPLACE DRIVER'S DOOR LOCK

OK

5	CHECK WIRE HARNESS (DRIVER'S DOOR LOCK ⇔ INTEGRATION RELAY)

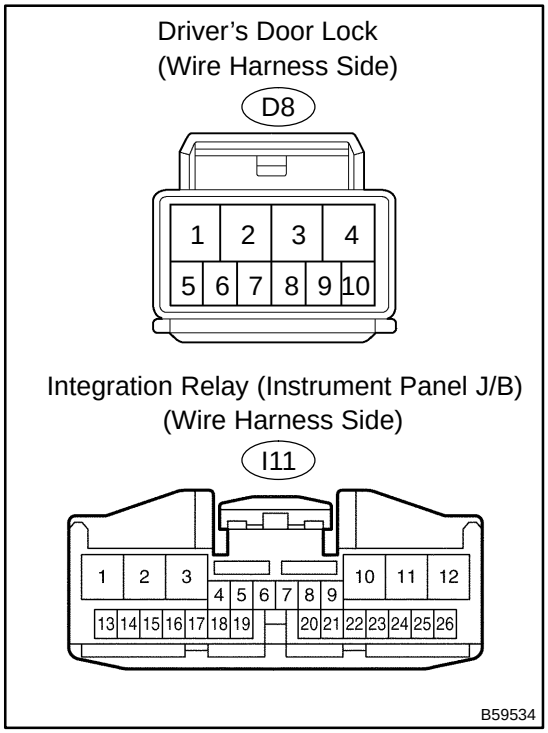

(a) Disconnect the driver's door lock and integration relay connectors.
(b) Check the continuity between the terminals of the driver's door lock and integration relay connectors, as shown in the illustration and table.

Standard (Check for open):

Symbols (Terminal No.) (Driver's door lock ⇔ Integration relay)	Specified condition
(D8–9) ⇔ L2 (I11–7)	Continuity
(D8–10) ⇔ UL3 (I11–6)	
(D8–8) ⇔ LSWD (I11–19)	
(D8–7) ⇔ Body ground	

NG → REPAIR OR REPLACE WIRE HARNESS AND CONNECTOR

OK

REPLACE INTEGRATION RELAY

057TE–01

CUSTOMER PROBLEM ANALYSIS CHECK

POWER DOOR LOCK CONTROL SYSTEM Check Sheet Inspector's name: _____

Customer's Name		**Registration No.**	
		Registration Year	
		Frame No.	
Date Vehicle Brought in	/ /	**Odometer Reading**	**km Mile**

Date Problem First Occurred		/ /
Frequency Problem Occurs		☐ Constant ☐ Sometimes (Times per day, month) ☐ Once only
Weather Conditions When Problem Occurred	**Weather**	☐ Fine ☐ Cloudy ☐ Rainy ☐ Snowy ☐ Various/Others
	Outdoor temperature	☐ Hot ☐ Warm ☐ Cool ☐ Cold (Approx. °F (°C))

Problem Symptom	☐ Malfunction in Door Lock/Unlock Operation Using Door Lock Control Switch.	☐ Driver's side door lock control switch.	☐ Driver's side door ☐ Passenger's side door
		☐ Passenger's side door lock control switch.	☐ Driver's side door ☐ Passenger's side door
	☐ Malfunction in Door Lock/Unlock Operation Using Key.	☐ Driver's side door key lock and unlock control switch.	☐ Driver's side door ☐ Passenger's side door
		☐ Passenger's side door key lock and unlock control switch.	☐ Driver's side door ☐ Passenger's side door
		☐ 2–step unlocking function of driver's side door key lock and unlock switch.	
	☐ Malfunction in Key Confinement Prevention Function.		
	☐ Others.		

057TF–01

LOCATION

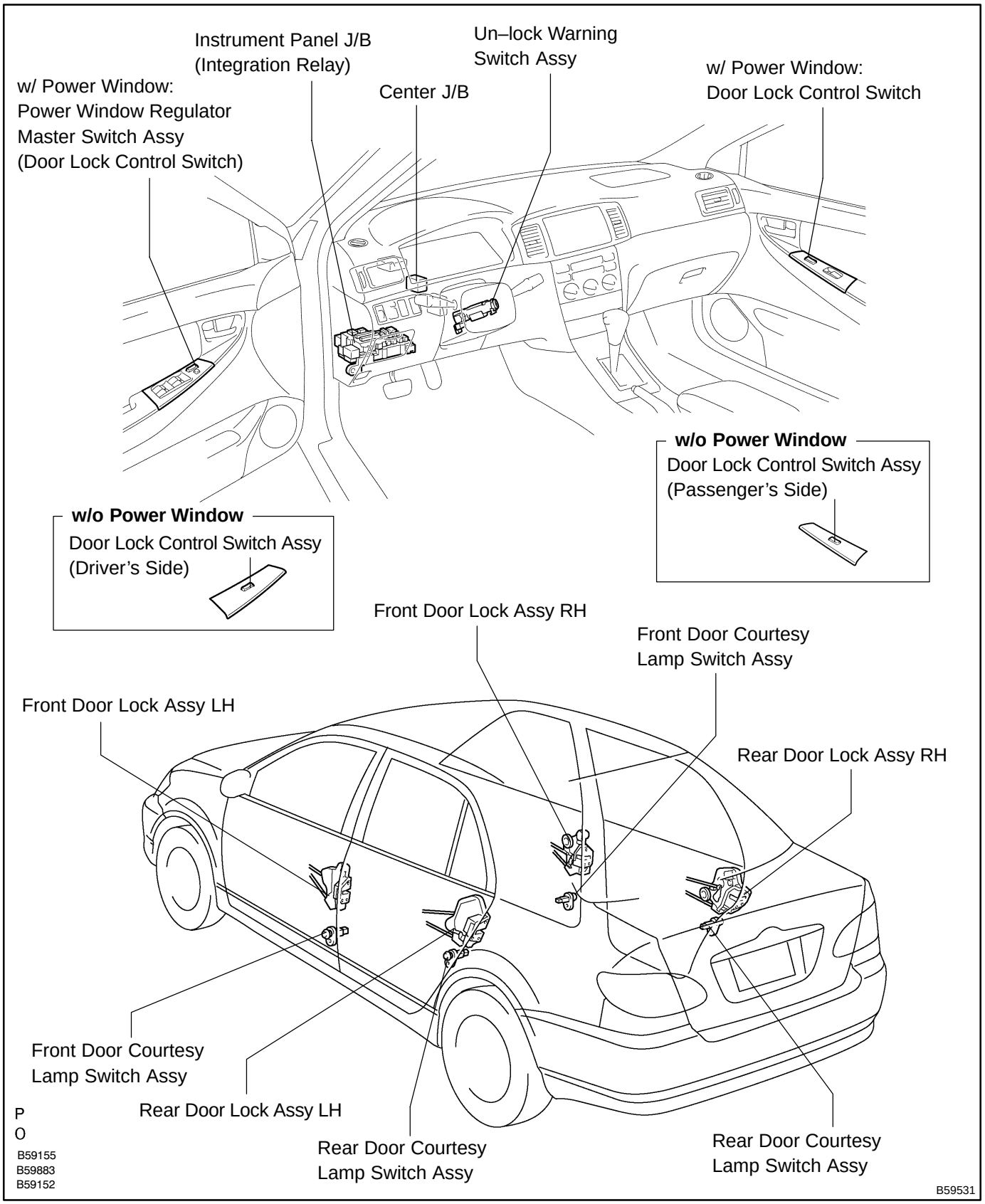

057TH–01

PROBLEM SYMPTOMS TABLE

Symptom	Suspected Area	See page
All doors are not operated by driver's door key cylinder interlocked with key	1. Door lock control switch 2. Front door lock assy LH 3. Wire harness 4. Integration relay	05–677
Key confinement prevention function does not work properly (Unlock warning switch circuit)	1. Un–lock warning switch assy 2. Front door courtesy lamp switch assy 3. Wire harness 4. Integration relay	05–682

057TG–01

TERMINALS OF ECU

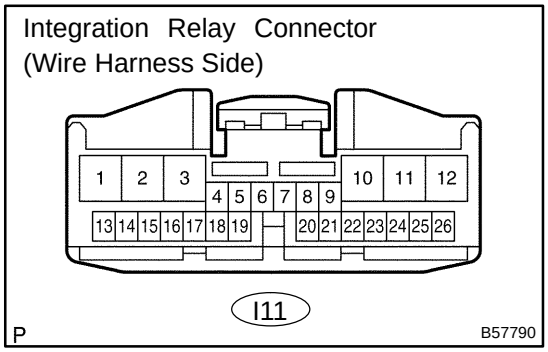

1. INSPECT INTEGRATION RELAY

(a) Disconnect the connector and check the continuity of each terminal of the disconnected connector.
Standard :

Symbols (Terminal No.)	Wiring color	Condition	Specified Condition
L1 (I11–9) ⇔ Body ground	L–W ⇔ Body ground	[w/ power window] Master switch (Manual door lock operation) OFF → LOCK	No continuity → Continuity
		[w/o power window] Driver's door control switch (Manual operation) OFF → LOCK	
		Passenger's door control switch (Manual operation) OFF → LOCK	
L2 (I11–7) ⇔ Body ground	G ⇔ Body ground	Key in driver's door lock cylinder LOCK → Other position	Continuity → No continuity
		Key in passenger's door lock cylinder LOCK → Other position	
UL1 (I11–8) ⇔ Body ground	L ⇔ Body ground	[w/ power window] Master switch (Manual door lock operation) OFF → UNLOCK	No continuity → Continuity
		[w/o power window] Door control switch (Manual operation) OFF → UNLOCK	
		Passenger's door control switch (Manual operation) OFF → UNLOCK	
UL2 (I11–5) ⇔ Body ground	L–B ⇔ Body ground	Key in passenger's door lock cylinder UNLOCK → Other position	Continuity → No continuity
UL3 (I11–6) ⇔ Body ground	L–Y ⇔ Body ground	Key in driver's door lock cylinder UNLOCK → Other position	
LSWD (I11–19) ⇔ Body ground	W ⇔ Body ground	Driver's door lock control knob LOCK → UNLOCK	No continuity → Continuity
LSWP (I11–18) ⇔ Body ground	W–R ⇔ Body ground	Passenger's door lock control knob LOCK → UNLOCK	
PCTY (I11–13) ⇔ Body ground	R–W ⇔ Body ground	Passenger's door fully closed → Opened	No continuity → Continuity

If the result is not as specified, the vehicle's side may malfunction.

(b) Reconnect the connector and check each terminal.
Standard:

Symbols (Terminal No.)	Wiring color	Condition	Specified Condition
ACTD (I11–1) ⇔ Body ground	R ⇔ Body ground	Key in driver's door lock cylinder OFF → LOCK	0 V → 10 – 14 V → 1 V or less

If the result is not as specified, the integration relay may malfunction.

2. INSPECT INSTRUMENT PANEL J/B (INTEGRATION RELAY)

Instrument Panel J/B (Integration Relay)

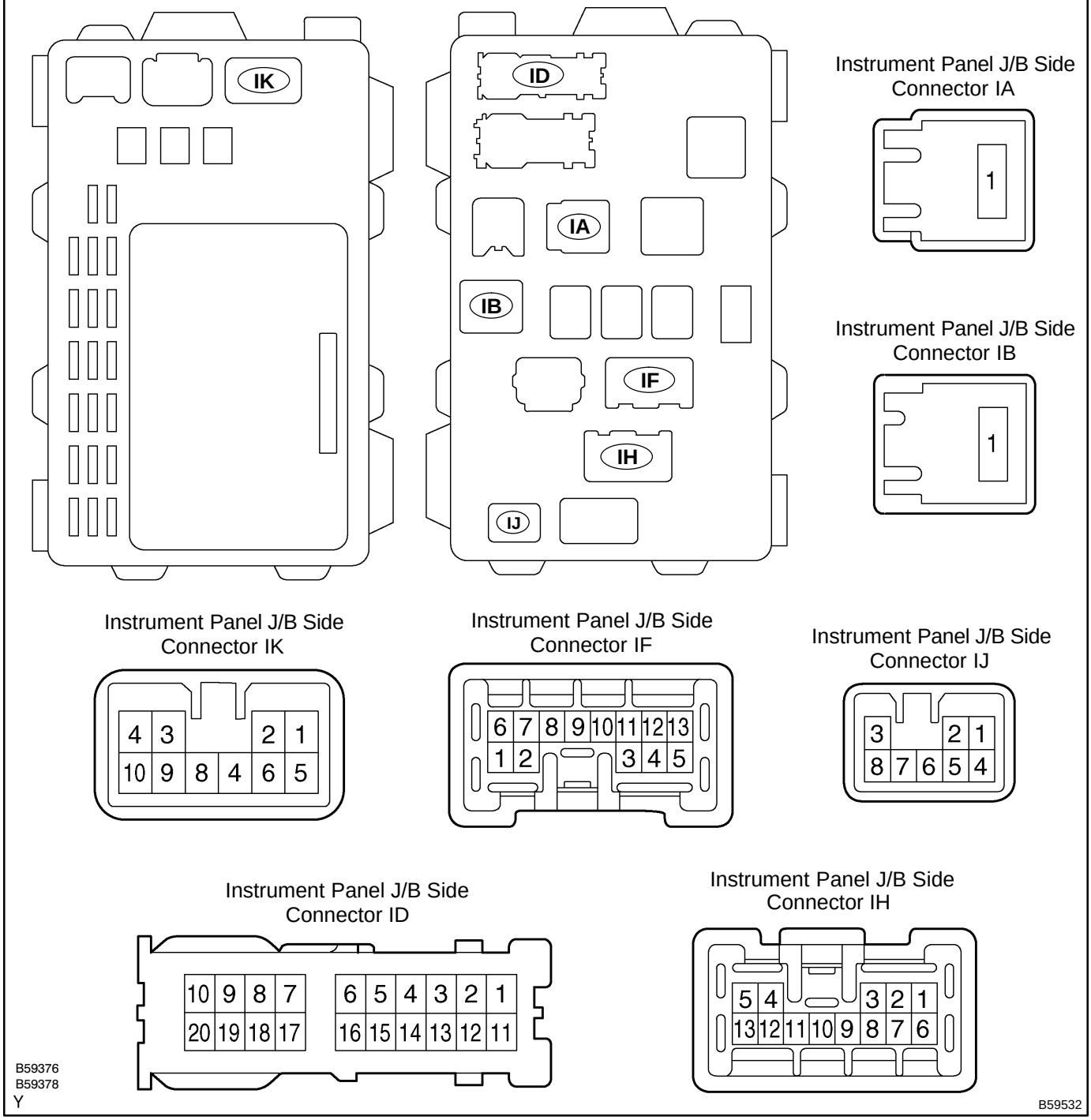

(a) Inspect the DOOR fuse.
(b) Disconnect connectors ID, IF, IH and IJ of the instrument panel J/B.
(c) Check each terminal of the disconnected connectors.
Standard:

Symbols (Terminal No.)	Wiring color	Condition	Specified Condition
KSW (IJ–8) ⇔ Body ground	L–B ⇔ Body ground	No key in ignition switch lock cylinder → Inserted	No continuity → Continuity
GND (IF–4) ⇔ Body ground	W–B ⇔ Body ground	Constant	Continuity
GND (IH–10) ⇔ Body ground	W–B ⇔ Body ground		
DCTY (ID–1) ⇔ Body ground	R–W ⇔ Body ground	Driver's door fully closed → Opened	No continuity → Continuity
PRCTY (ID–14) ⇔ Body ground	R–B ⇔ Body ground	Rear LH door fully closed → Opened	
PRCTY (ID–15) ⇔ Body ground	R–Y ⇔ Body ground	Rear RH door fully closed → Opened	

If the result is not as specified, the vehicle's side may malfunction.
(d) Reconnect the connectors and check each terminal.
Standard:

Symbols (Terminal No.)	Wiring color	Condition	Specified Condition
IG (IA–1) ⇔ Body ground	W ⇔ Body ground	Constant	10 – 14 V
+B (IB–1) ⇔ Body ground	W ⇔ Body ground		
KSW (IJ–8) ⇔ Body ground	L–B ⇔ Body ground	No key in ignition switch lock cylinder → Inserted	10 – 14 V → 0 V
ACT+ (IK–2) ⇔ Body ground	L ⇔ Body ground	Key in driver's door lock cylinder OFF → LOCK	0 V → 10 – 14 V → 1 V or less
ACT+ (ID–9) ⇔ Body ground	L ⇔ Body ground	Key in driver's door lock cylinder OFF → UNLOCK	
ACT– (IK–5) ⇔ Body ground	R⇔ Body ground	Key in driver's door lock cylinder OFF → LOCK	
ACT– (ID–20) ⇔ Body ground	R ⇔ Body ground	Key in driver's door lock cylinder OFF → UNLOCK	

If the result is not as specified, the instrument panel J/B (integration relay) assembly may malfunction.

POWER DOOR LOCK CONTROL SYSTEM

HOW TO PROCEED WITH TROUBLESHOOTING

057TD–01

1	VEHICLE BROUGHT IN

2	CUSTOMER PROBLEM ANALYSIS CHECK AND SYMPTOM CHECK (See page 05–671)

3	PROBLEM SYMPTOMS TABLE (See page 05–676)

(a) Without applicable symptoms, proceed to ”A”
(b) With applicable symptoms, proceed to ”B”

B → GO TO STEP 5

A

4	PERFORM TROUBLESHOOTING IN THE FOLLOWING METHOD, DEPENDING ON MALFUNCTION SYMPTOM

(a) Terminals of ECU (See page 05–673)
(b) Inspection (See page 73–3)
(c) On–vehicle inspection (See page 73–1)

5	ADJUSTMENT, REPAIR OR REPLACEMENT

END

KEY CONFINEMENT PREVENTION FUNCTION DOES NOT WORK PROPERLY (UNLOCK WARNING SWITCH CIRCUIT)

CIRCUIT DESCRIPTION

The unlock warning switch turns on when the key is inserted in the ignition key cylinder and the door courtesy switch turns on when the driver's door is opened, and the integration relay monitors both switches conditions. According to these switches conditions, the integration relay controls the door locking operation not to lock the doors while both switches are on, in order to prevent the key from being confined.

WIRING DIAGRAM

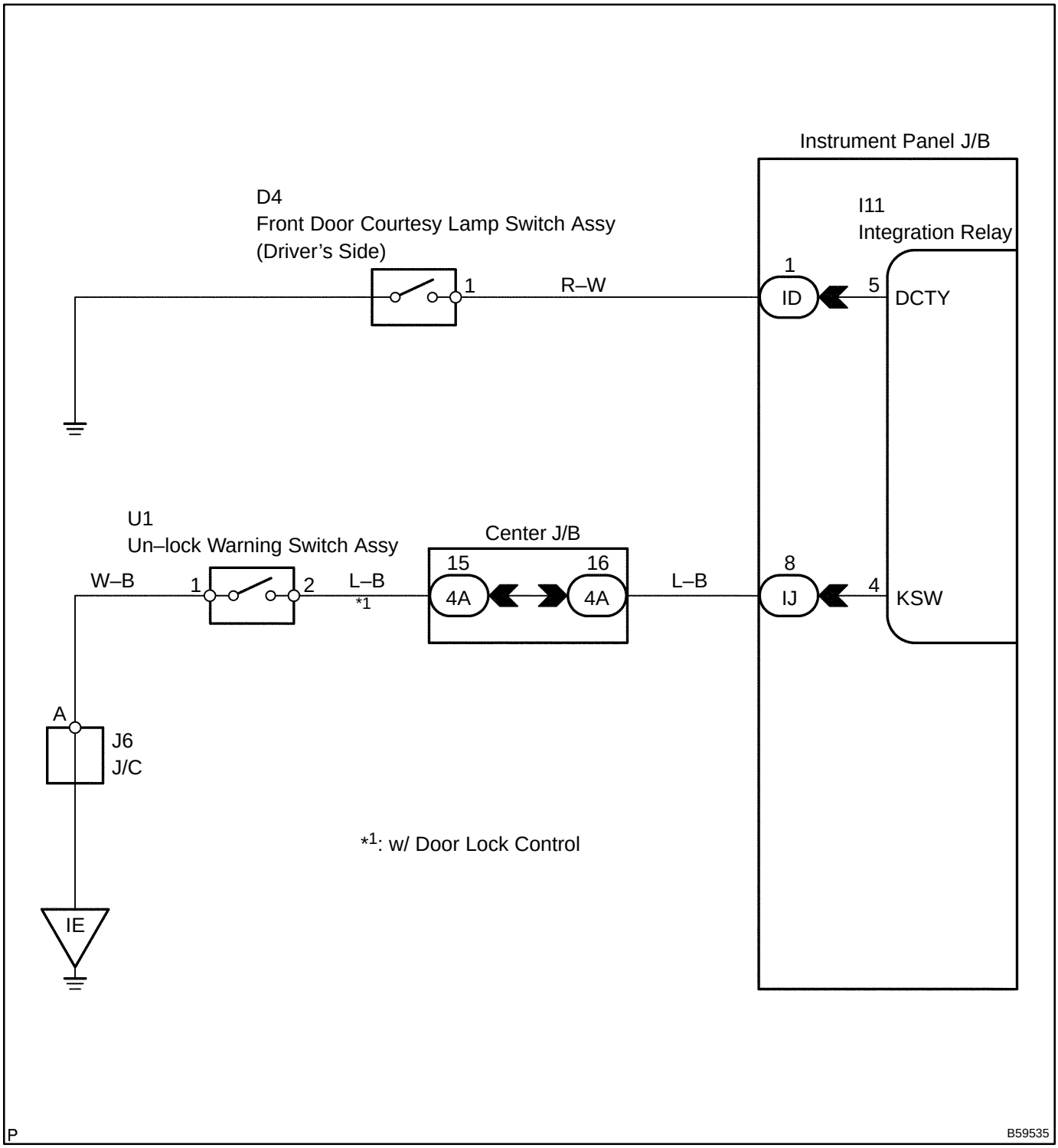

INSPECTION PROCEDURE

1 INSPECT UN–LOCK WARNING SWITCH ASSY

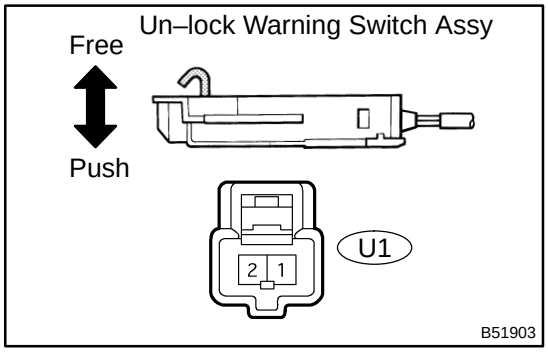

(a) Remove the un–lock warning switch assy.
(b) Inspect the un–lock warning switch assy continuity, as shown in the illustration and table.

Standard:

Terminal No.	Condition	Specified condition
U1–1 ⇔ U1–2	Free	No continuity
	Push	Continuity

NG → **REPLACE UN–LOCK WARNING SWITCH ASSY**

OK

2 CHECK WIRE HARNESS (UN–LOCK WARNING SWITCH ⇔ INSTRUMENT PANEL J/B)

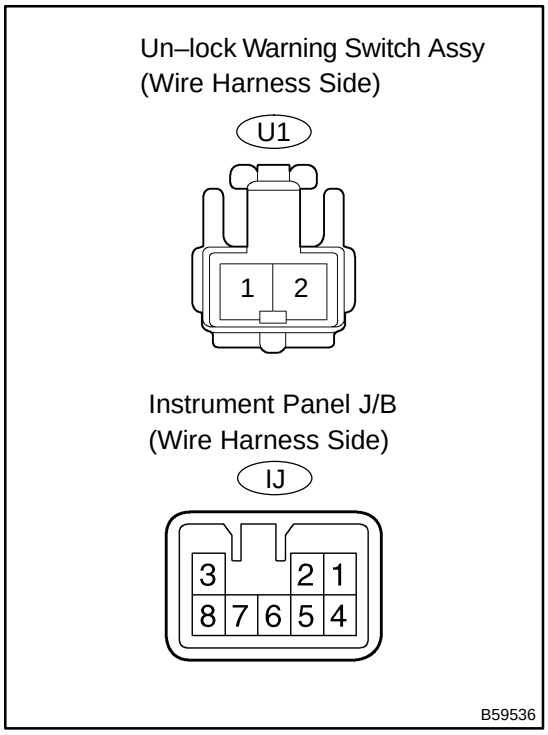

(a) Disconnect the un–lock warning switch assy and instrument panel J/B connectors.
(b) Check the continuity between the terminals of the un–lock warning switch assy and instrument panel J/B connectors, as shown in the illustration and table.

Standard (Check for open):

Symbols (Terminal No.) (Un–lock warning switch ⇔ Instrument panel J/B)	Specified condition
(U1–2) ⇔ KSW (IJ–8)	Continuity
(U1–1) ⇔ Body ground	

NG → **REPAIR OR REPLACE WIRE HARNESS AND CONNECTOR**

OK

3 INSPECT FRONT DOOR COURTESY LAMP SWITCH ASSY (DRIVER'S SIDE)

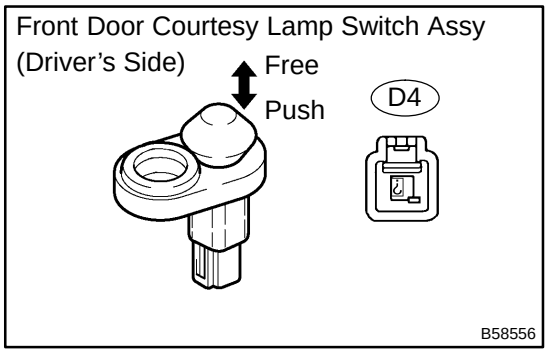

(a) Remove the courtesy lamp switch.
(b) Inspect the courtesy lamp switch continuity, as shown in the illustration and table.

Standard:

Terminal No.	Condition	Specified condition
D4–1 ⇔ Body ground	Free	Continuity
	Push	No continuity

NG → **REPLACE FRONT DOOR COURTESY LAMP SWITCH ASSY**

OK

4 CHECK WIRE HARNESS (FRONT DOOR COURTESY LAMP SWITCH ASSY [DRIVER'S SIDE] ⇔ INSTRUMENT PANEL J/B)

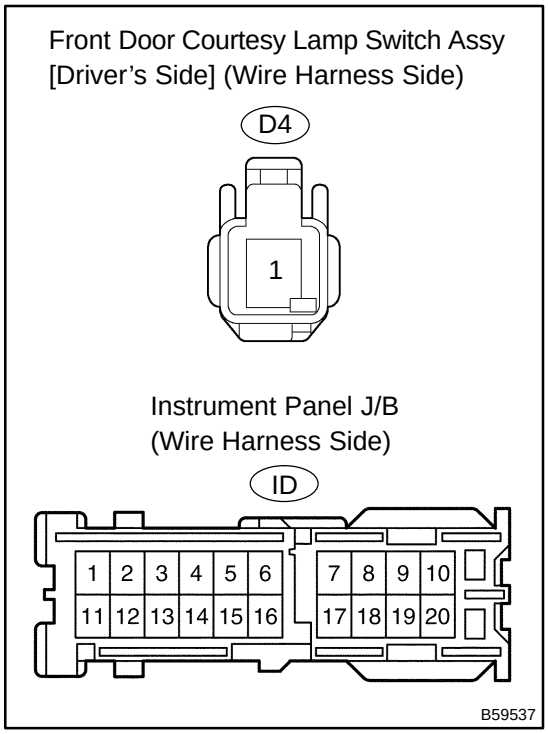

(a) Disconnect the courtesy lamp switch and instrument panel J/B connectors.
(b) Check the continuity between the terminals of the courtesy lamp switch and instrument panel J/B connectors, as shown in the illustration and table.

Standard (Check for open):

Symbols (Terminal No.) (Courtesy lamp switch ⇔ Instrument panel J/B)	Specified condition
(D4–1) ⇔ DCTY (ID–1)	Continuity

NG → **REPAIR OR REPLACE WIRE HARNESS AND CONNECTOR**

OK

REPLACE INTEGRATION RELAY

05CRM–02

CHECK FOR INTERMITTENT PROBLEMS

Hand–held tester only:

By putting the vehicle's ECM in the check mode, the 1 trip detection logic is possible instead of the 2 trip detection logic, and the sensitivity to detect faults is increased. This makes it easier to detect intermittent problems.

(a) Clear the DTCs (See page 05–11).
(b) Set the check mode (See page 05–11).
(c) Perform a simulation test (See page 01–20).
(d) Check the connector and terminal (See page 01–30).
(e) Wiggle the harness and connector (See page 01–30).

CHECKING MONITOR STATUS

HINT:
”MONITOR RESULT” indicates normal or malfunction of each component and system when judgment has done.

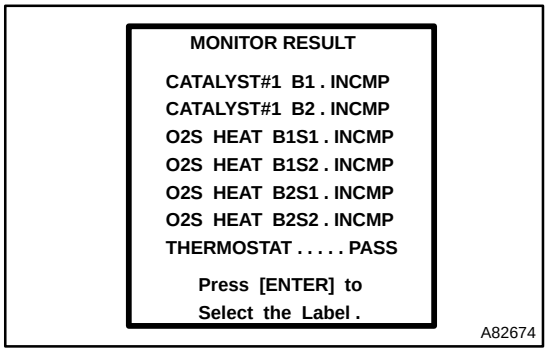

1. HOW TO READ DATA

(a) Connect the hand–held tester to the DLC 3.

(b) Enter ”MONITOR RESULT” from ”DIAGNOSIS / ENHANCED OBD II / MONITOR INFO / MONITOR RESULT” on the hand–held tester. You will see ”Test ID” and ”INCMP”, ”Pass” or ”Fail” on the MONITOR RESULT screen.

HINT:

- INCMP: The judgement has not been done yet.
- PASS: Normal is detected.
- FAIL: Malfunction is detected.

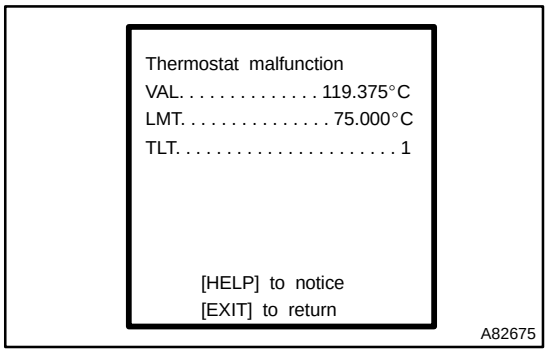

(c) Select a Test ID that you want from the list and press the ”ENTER” button. You will see the following screen:

(1) VAL (TEST VALUE) [Test Data] [Unit]
(2) LMT (TEST LIMIT) [Test Limit] [Unit]
(3) TLT [Test Limit Type]

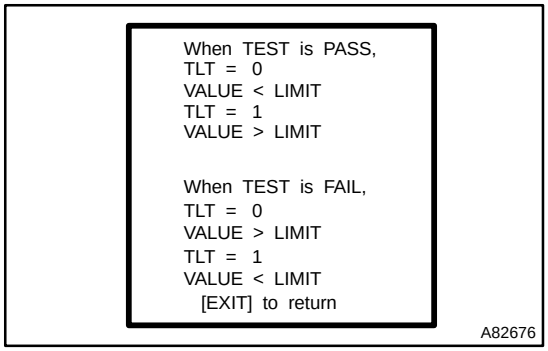

(d) By pressing the ”HELP” button, you can see more information.

HINT:

- Monitor test results can be viewed in the MONITOR RESULT screen.
- Monitor test results indicate the latest malfunction judgement result of this diagnostic.
- TEST VALUE indicates the detection parameter value (Example: P0128 Thermostat Malfunction = Engine coolant temperature) at the time of malfunction (or normal) judgement is done.
- TEST LIMIT indicates a threshold of malfunction judgement (Example: P0128 Thermostat Malfunction = 75°C).
- When the monitor runs, the monitored Parameter’s VALUE is recorded. The value is then compared to the TEST LIMIT to determine if the result is PASS or FAIL.
- By comparing the Parameter VALUE to the TEST LIMIT, it is possible to determine the degree of failure.

- In rare cases, the monitor may have passed even with a DTC set and MIL illuminated. The monitor may have failed on a previous trip, and then passed on the most recent trip. This would indicated an intermittent problem may be the cause of the DTC.

CHECK MODE PROCEDURE

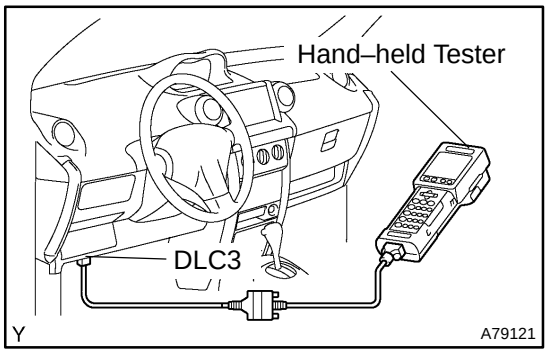

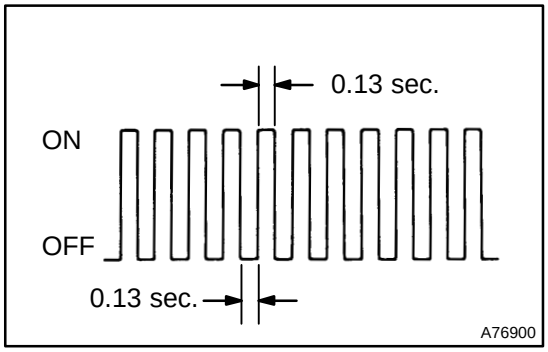

HINT:

Hand–held tester only:

Compared to the normal mode, the check mode has more sensing ability to detect malfunctions. Furthermore, the same diagnostic items which are detected in the normal mode can also be detected in the check mode.

1. CHECK MODE PROCEDURE(Using the hand–held tester)

(a) Check the initial conditions.
  (1) Battery positive voltage 11 V or more
  (2) Throttle valve fully closed
  (3) Transmission in the P or N position
  (4) A/C switched OFF

(b) Turn the ignition switch OFF.

(c) Connect the hand–held tester to the DLC3.

(d) Turn the ignition switch ON.

(e) Switch the hand–held tester from the normal mode to the check mode (check that the MIL flashes).

NOTICE:

If the hand–held tester switches the ECM from the normal mode to the check mode or vice–versa, or if the ignition switch is turned from ON to ACC or OFF during the check mode, the DTC and freeze frame data will be erased.

(f) Start the engine (MIL goes off after the engine starts).

(g) Simulate the conditions of the malfunction described by the customer.

NOTICE:

Leave the ignition switch ON until you have checked the DTC, etc.

(h) After simulating the malfunction conditions, check the DTC and freeze frame data, etc using the hand–held tester diagnosis selector.

HINT:

Do not turn the ignition switch OFF, as turning it OFF switches the diagnosis system from the check mode to the normal mode, which erases all the DTCs, etc.

(i) After checking the DTC, inspect the applicable circuit.

2. CLEAR DTC (Using the OBD II scan tool or hand–held tester)

(a) Connect the OBD II scan tool or hand–held tester to the DLC3.

(b) Turn the ignition switch ON.

(c) Operate the OBD II scan tool or hand–held tester to erase the codes. All the DTCs and freeze frame data will be erased. (See the OBD II scan tool's instruction book for operating instructions.)

3. CLEAR DTC (Not using the OBD II scan tool or hand–held tester)

(a) Disconnect the battery terminal or remove the EFI fuse from the engine room R/B for more than 60 seconds.

05289–10

CUSTOMER PROBLEM ANALYSIS CHECK

ENGINE CONTROL SYSTEM Check Sheet

Inspector's Name

Customer's Name		VIN	
Driver's Name		Production Date	
Date Vehicle Brought in		Licence No.	
Odometer Reading	km miles		

Problem Symptoms	☐ Engine does not Start	☐ Engine does not crank ☐ No initial combustion ☐ No complete combustion
	☐ Difficult to Start	☐ Engine cranks slowly ☐ Other _____
	☐ Poor Idling	☐ Incorrect first idle ☐ Idling rpm is abnormal ☐ High (rpm) ☐ Low (rpm) ☐ Rough idling ☐ Other _____
	☐ Poor Driveability	☐ Hesitation ☐ Back fire ☐ Muffler explosion (after–fire) ☐ Surging ☐ Knocking ☐ Other _____
	☐ Engine Stall	☐ Soon after starting ☐ After accelerator pedal depressed ☐ After accelerator pedal released ☐ During A/C operation ☐ Shifting from N to D ☐ Other _____
	☐ Others	

Data Problem Occurred		
Problem Frequency		☐ Constant ☐ Sometimes (times per day/month) ☐ Once only ☐ Other _____
Condition When Problem Occurs	Weather	☐ Fine ☐ Cloudy ☐ Rainy ☐ Snowy ☐ Various/Other _____
	Outdoor Temperature	☐ Hot ☐ Warm ☐ Cool ☐ Cold (approx. ____ °C/____ °F)
	Place	☐ Highway ☐ Suburbs ☐ Inner City ☐ Uphill ☐ Downhill ☐ Rough road ☐ Other _____
	Engine Temp.	☐ Cold ☐ Warming up ☐ After Warming up ☐ Any temp. ☐ Other _____
	Engine Operation	☐ Starting ☐ Just after starting (min.) ☐ Idling ☐ Racing ☐ Driving ☐ Constant speed ☐ Acceleration ☐ Deceleration ☐ A/C switch ON/OFF ☐ Other _____

Condition of malfunction indicator light (MIL)		☐ Remains on ☐ Sometimes lights up ☐ Does not light up
DTC Inspection	Normal mode (Pre–check)	☐ Normal ☐ Malfunction code(s) (code) ☐ Freeze frame data ( )
	Check Mode	☐ Normal ☐ Malfunction code(s) (code) ☐ Freeze frame data ( )

05CRK–02

DATA LIST/ACTIVE TEST

1. DATA LIST

HINT:

Using the DATA LIST displayed by the hand–held tester or the OBD II scan tool, you can read the value of the switches, sensors, actuators and so on without parts removal. Reading the DATA LIST as a first step of troubleshooting is one method to shorten diagnostic time.

NOTICE:

The values given below for "Normal Condition" are representative values. A vehicle may still be normal even if its value differs from those listed here. Do not solely depend on the "Normal Condition" here when deciding whether a part is faulty or not.

(a) Warm up the engine.
(b) Turn the ignition switch OFF.
(c) Connect the hand–held tester or the OBD II scan tool to the DLC3.
(d) Turn the ignition switch ON.
(e) Push the "ON" button of the hand–held tester or the OBD II scan tool.
(f) Select the item "DIAGNOSIS / ENHANCED OBD II / DATA LIST".
(g) According to the display on the tester, read the "DATA LIST".

Hand–held tester display	Measurement Item/Range (Display)	Normal Condition*1	Diagnostic Note
INJECTOR	Injection period of the No. 1 cylinder/ Min.: 0 ms, Max: 32.64 ms	Idling: 1.1 to 2.5 ms	—
IGN ADVANCE	Ignition timing advance for No. 1 cylinder/ Min.: –64 deg., Max.: 63.5 deg.	Idling: BTDC 8 to 20˚	—
IAC DUTY RATIO	Intake Air Control Valve duty ratio Opening ratio rotary solenoid type ISC valve/ Min.: 0 %, Max.: 99 %	Idling: 25 to 45 % Running without load (2,500 rpm): 12.3 to 17.9 %	—
CALC LOAD	Calculated load by ECM/ Min.: 0 %, Max.: 100 %	Idling: 11.3 to 20.0 % Running without load (2,500 rpm): 11.5 to 17.9 %	—
MAF	Air flow rate from MAF sensor/ Min.: 0 gm/s, Max.: 655 gm/s	Idling: M/T 1.4 to 2.3 gm/s. A/T 1.4 to 2.3 gm/s. Racing without load (2,500 rpm): 5.4 to 7.9 gm/s.	If the value is approximately 0.0 gm/s: • Mass air flow meter power source circuit open • VG circuit open or short If the value is 160.0 gm/s or more: • E2G circuit open
ENGINE SPD	Engine Speed/ Min.: 0 rpm, Max.: 16,383 rpm	Idling: M/T 650 to 750 rpm A/T 650 to 750 rpm	—
COOLANT TEMP	Coolant temperature/ Min.: –40 °C, Max.: 140 °C	After warming up: 80 to 95˚C (176 to 203˚F)	• If the value is –40°C (–40°F): sensor circuit is open. • If the value is greater than 140°C (284°F): sensor circuit is shorted.
INTAKE AIR	Intake air temperature/ Min.: –40 °C, Max.: 140 °C	Equivalent to Ambient Temp.	
THROTTLE POS	Absolute throttle position sensor/ Min.: 0 %, Max.: 100 %	Throttle Fully Closed: 8 to 18 % Throttle Fully Open: 64 to 98 %	Read the value with the ignition switch ON (Do not start engine)
CTP SW	Closed throttle position switch/ ON or OFF	Throttle Fully Closed: ON Throttle Open: OFF	—
VEHICLE SPD	Vehicle Speed/ Min.: 0 km/h, Max.: 255 km/h	Vehicle stopped: 0 km/h (0 mph)	—

Hand–held tester display	Measurement Item/Range (Display)	Normal Condition*1	Diagnostic Note
O2S B1 S1	Heated oxygen sensor output voltage for bank 1 sensor 1/ Min.: 0 V, Max.: 1.275 V	Idling: 0.1 to 0.9 V	Performing the INJ VOL or A/F CONTROL function of the ACTIVE TEST enables the technician to check the voltage output of each sensor.
O2S B1 S2	Heated oxygen sensor output voltage for bank 1 sensor 2/ Min.: 0 V, Max.: 1.275 V	Idling: 0.1 to 0.9 V	
VAPOR PRESS	Vapor Pressure/ Min.: –4.125 kPa, Max.: 2.125 kPa	Fuel tank cap removed: 0 kPa	Pressure inside the fuel tank can be read by the vapor pressure sensor
SHORT FT #1	Short term fuel trim of bank 1/ Min.: –100 %, Max.: 100 %	0 ± 20%	—
LONG FT #1	Long term fuel trim of bank 1/ Min.: –100 %, Max.: 100 %	0 ± 20%	This item is the overall fuel compensation carried out in long–term to compensate for a continual deviation of the short–term fuel trim from the central value.
TOTAL FT #1	Total fuel trim of bank 1: Average value for fuel trim system of bank 1/ Min.: 0.5, Max.: 1.496	Idling: 0.5 to 1.4	—
O2FT B1 S1	Short term fuel trim associated with the bank 1 sensor 2/ Min.: –100 %, Max.: 100 %	0 ± 20 %	Same as SHORT FT #1
O2FT B1 S2	Short term fuel trim associated with the bank 1 sensor 2/ Min.: –100 %, Max.: 100 %	0 ± 20 %	Same as SHORT FT #2
FUEL SYS #1	Fuel system status (Bank 1)/ OL or CL or OL DRIVE or OL FAULT or CL FAULT	Idling after warming up: CLOSED	• OL: Open loop has not yet satisfied conditions to go closed loop. • CL: Closed loop using heated oxygen sensor(s) as feed back for fuel control. • OL DRIVE: Open loop due to driving conditions. (fuel enrichment) • OL FAULT: Open loop due to detected system fault. • CL FAULT: Closed loop but one of heated oxygen sensors, which is used for fuel control, is functioning improperly.
FC IDL	Fuel cut idle/ON or OFF	Fuel cut operating: ON	FC IDL = ”ON” when throttle valve is fully closed and engine speed is over 1,500 rpm.
O2 LR B1 S1	Responsetime of the heated oxygen sensor, lean to rich (bank 1 sensor 1)/ Min.: 0 ms, Max.: 16,711 ms	Idling after warming up: 0 to 1,000 m/s.	—
O2 RL B1 S1	Responsetime of the heated oxygen sensor, from rich to lean (bank 1 sensor 1)/ Min.: 0 ms, Max.: 16,711 ms	Idling after warming up: 0 to 1,000 m/s.	—
MIL	MIL status/ ON or OFF	MIL ON: ON	—
STARTER SIG	Starter Signal/ON or OFF	Cranking: ON	—
A/C SIG	A/C Signal/ON or OFF	A/C ON: ON	—
PNP SW [NSW] *2	Park/neutral position switch signal/ ON or OFF	P or N position: ON	—
ELECT LOAD SIG	Electrical load signal / ON or OFF	Defogger switch ON: ON	—

Hand–held tester display	Measurement Item/Range (Display)	Normal Condition*1	Diagnostic Note
STOP LIGHT SW *2	Stop Light Switch /ON or OFF	• Brake pedal depressed ON • Brake pedal released OFF	—
PS OIL PRESS SW	Power steering signal / ON or OFF	Steering position is; center: OFF Except center:ON	—
PS SIGNAL	Power steering signal/ ON or OFF	When the steering wheel is turned	This signal is usually ON status until the IG switch is turned OFF.
FUEL PUMP / SPD	Fuel pump / speed status / ON/H or OFF/M,L	Idling: ON	—
A/C MAG CLUTCH	A/C magnet clutch status / ON or OFF	A/C magnet clutch ON: ON	—
EVAP VSV	VSV status for EVAP control/ ON or OFF	VSV operating: ON	VSV for EVAP is controlled by the ECM (ground side duty control)
VVT CTRL B1	VVT control status (bank 1)/ ON or OFF	VVT system operation: ON	—
IGNITION	Ignition counter/ Min.: 0, Max.: 400	0 to 400	—
CYL #1, #2, #3, #4	Misfire ratio of the cylinder 1 to 4/ Min.: 0 %, Max.: 50 %	0 %	This item is displayed in only idling
MISFIRE LOAD	Engine load for first misfire range/ Min.: 0 g/rev, Max.: 3.98 g/rev	Misfire 0: 0 g/rev	—
MISFIRE RPM	Engine RPM for first misfire range/ Min.: 0 rpm, Max.: 6,375 rpm	Misfire 0: 0 rpm	—
O2 LR B1 S2	Responsetime of the heated oxygen sensor, lean to rich (bank 1 sensor 2)/ Min.: 0 ms, Max.: 16,711 ms	Idling after warming up: 0 to 1,000 m/s.	—
FC TAU	Fuel Cut TAU: Fuel cut during very light load	Fuel cut operating: ON	The fuel cut is being performed under very light load to prevent the engine combustion from becoming incomplete.
O2 RL B1 S2	Responsetime of the heated oxygen sensor, rich to lean (bank 1 sensor 2)/ Min.: 0 ms, Max.: 16,711 ms	Idling after warming up: 0 to 1,000 m/s.	—
CHECK MODE	Check mode/ON or OFF	Check mode ON:OFF	—

*1: If no conditions are specifically stated for ”Idling”, it means the shift lever is in the N or P position, the A/C switch is OFF and all accessory switches are OFF.
*2: A/T only

2. ACTIVE TEST

HINT:

Performing the ACTIVE TEST using the hand–held tester or the OBD II scan tool allows the relay, VSV, actuator and so on to operate without parts removal. Performing the ACTIVE TEST as a first step of troubleshooting is one method to shorten diagnostic time.

It is possible to display the DATA LIST during the ACTIVE TEST.

(a) Warm up the engine.
(b) Turn the ignition switch OFF.
(c) Connect the hand–held tester or the OBD II scan tool to the DLC3.
(d) Turn the ignition switch ON.
(e) Push the ”ON” button of the hand–held tester or the OBD II scan tool.
(f) Select the item ”DIAGNOSIS / ENHANCED OBD II / ACTIVE TEST”.
(g) According to the display on the tester, perform the ”ACTIVE TEST”.

Hand–held Tester Display	Test Details	Diagnostic Note
INJ VOL	[Test Details] Control the injection volume Min.: –12.5 %, Max.: 24.8 % [Vehicle Condition] Engine speed: 3,000 rpm or less	• All injectors are tested at once. • Injection volume is gradually changed between –12.5 and 25%.
A/F CONTROL	[Test Details] Control the injection volume –12.5 or 25 % (Change the injection volume –12.5 % or 25 %.) [Vehicle Condition] Engine speed: 3,000 rpm or less	The following A/F CONTROL procedure enables the technician to check and graph the voltage outputs of both the A/F sensor and heated oxygen sensor. For displaying the graph indication, enter ”ACTIVE TEST/A/F CONTROL/USER DATA”, then select ”O2S B1S1 and O2S B1S2” by pressing ”YES” button and push ”ENTER” button before pressing ”F4” button.
IAC DUTY RATIO	[Test Details] Control the ISC duty ratio 0 to 90 % [Vehicle Condition] • Engine speed: Idling • Vehicle speed: 0 mph (0 km/h) • Battery voltage: 8.5 V or more	—
CAN CTRL VSV	[Test Details] Activate the VSV for canister control ON or OFF	—
TANK BYPASS VSV	[Test Details] Activate the VSV for tank bypass. ON or OFF	—
EVAP VSV (ALONE)	[Test Details] Activate the VSV for EVAP control ON or OFF	—
A/C MAG CLUTCH	[Test Details] Control the A/C magnet clutch. ON or OFF	—
FUEL PUMP / SPD	[Test Details] Control the fuel pump ON or OFF	—

Hand–held Tester Display	Test Details	Diagnostic Note
VVT CTRL B1	[Test Details] Activate the VVT system (Bank 1). ON or OFF	• ON: Rough idle or engine stall. • OFF: Normal engine speed.
TC/TE1	[Test Details] Connect the TC and TE1 ON or OFF	—
FC IDL PROHBT	[Test Details] Control the idle fuel cut prohibit ON or OFF	—

05DID–01

DEFINITION OF TERMS

Term	Definition
Monitor description	Description of what the ECM monitors and how it detects malfunction (monitoring purpose and its details).
Related DTCs	Diagnostic code
Typical enabling condition	Preconditions that allow the ECM to detect malfunction. With all preconditions satisfied, the ECM sets the DTC when the monitored value(s) exceeds the malfunction threshold(s).
Sequence of operation	The priority order that is applied to monitoring, if multiple sensors and components are used to detect the malfunction. While another sensor is being monitored, the next sensor or component will not be monitored until the previous monitoring has concluded.
Required sensor/components	The sensors and components that are used by the ECM to detect malfunction.
Frequency of operation	The number of times that the ECM checks for malfunction per driving cycle. ”Once per driving cycle” means that the ECM detects malfunction only one time during a single driving cycle. ”Continuous” means that the ECM detects malfunction every time when enabling condition is met.
Duration	The minimum time that the ECM must sense a continuous deviation in the monitored value(s) before setting a DTC. This timing begins after the ”typical enabling conditions” are met.
Malfunction thresholds	Beyond this value, the ECM will conclude that there is malfunction and set a DTC.
MIL operation	MIL illumination timing after a defect is detected. ”Immediately” means that the ECM illuminates the MIL the instant the ECM determines that there is malfunction. ”2 driving cycle” means that the ECM illuminates the MIL if the same malfunction is detected again in the 2nd driving cycle.

05CRG–02

DIAGNOSIS SYSTEM

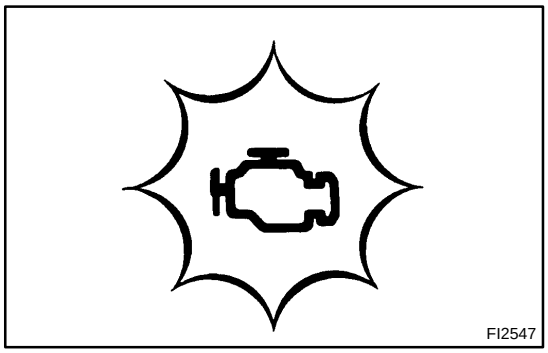
FI2547

1. DESCRIPTION

- When troubleshooting OBD II vehicles, the only difference from the usual troubleshooting procedure is that you need to connect the vehicle to the OBD II scan tool complying with SAE J1978 or the hand–held tester, and read various data output from the vehicle's ECM.
- OBD II regulations require that the vehicle's on–board computer illuminates the Malfunction Indicator Light (MIL) on the instrument panel when the computer detects a malfunction in the emission control system/components or in the powertrain control components which affect vehicle emissions, or a malfunction in the computer. In addition to the MIL illuminating when a malfunction is detected, the applicable Diagnostic Trouble Codes (DTCs) prescribed by SAE J2012 are recorded in the ECM memory (See page 05–35).

If the malfunction does not reoccur in 3 consecutive trips, the MIL goes off automatically but the DTCs remain recorded in the ECM memory.

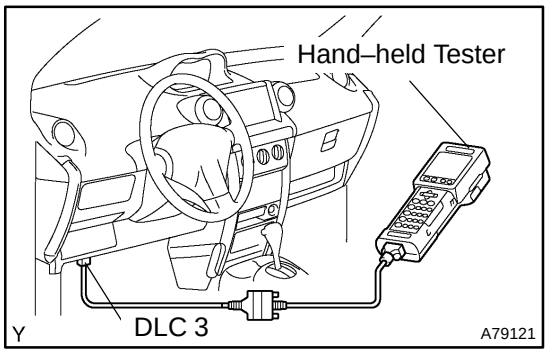

- To check the DTC, connect the hand–held tester or OBD II scan tool to the Data Link Connector 3 (DLC3) of the vehicle. The hand–held tester or OBD II scan tool also enables you to erase the DTC and check the freeze frame data and various forms of engine data (for operating instructions, see the OBD II scan tool's instruction book). The DTC includes SAE controlled codes and manufacturer controlled codes. SAE controlled codes must be set as prescribed by the SAE, while manufacturer controlled codes can be set freely by a manufacturer within the prescribed limits (see the DTC chart on page 05–35).
- The diagnosis system operates in the normal mode during normal vehicle use. It also has a check mode for technicians to simulate malfunction symptoms and troubleshoot it. Most DTCs use the 2 trip detection logic* to prevent erroneous detection, and to ensure a thorough malfunction detection. By switching the ECM to the check mode when troubleshooting, a technician can cause the MIL to illuminate for a malfunction that is only detected once or momentarily (hand–held tester only) (See page 05–11).
- *2 trip detection logic:
  When a malfunction is first detected, the malfunction is temporarily stored in the ECM memory (1st trip). If the same malfunction is detected again during the second

drive test, this second detection causes the MIL to illuminate (2nd trip) (However, the ignition switch must be turned OFF between the 1st trip and 2nd trip).

- Freeze frame data:
  The freeze frame data records the engine conditions (fuel system, calculated load, engine coolant temperature, fuel trim, engine speed, vehicle speed, etc.) when a malfunction is detected. When troubleshooting, it is useful for determining whether the vehicle was running or stopped, the engine was warmed up or not, the air–fuel ratio was lean or rich, etc. at the time of the malfunction.

Priorities for troubleshooting:

If troubleshooting priorities for multiple DTCs are given in the applicable DTC chart, these priorities should be followed.

If no instructions are given, perform troubleshooting for those DTCs according to the following priorities.

(a) DTCs other than fuel trim malfunction (DTCs P0171 and P0172) and misfire (DTCs P0300 to P0304).
(b) Fuel trim malfunction (DTCs P0171 and P0172).
(c) Misfire (DTCs P0300 to P0304).

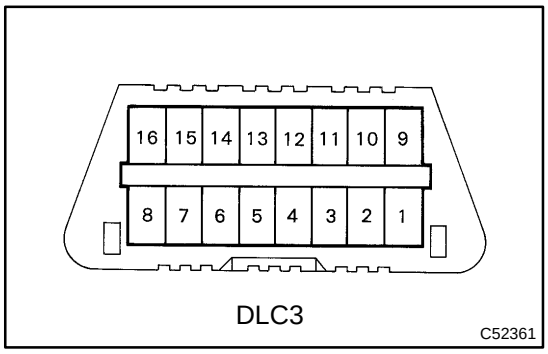

2. CHECK DLC3

The vehicle's ECM uses the ISO 9141–2 for communication protocol. The terminal arrangement of the DLC3 complies with SAE J1962 and matches the ISO 9141–2 format.

Symbol	Terminal No.	Name	Reference terminal	Result	Condition
SIL	7	Bus "+" line	5 – Signal ground	Pulse generation	During transmission
CG	4	Chassis ground	Body ground	1 Ω or less	Always
SG	5	Signal ground	Body ground	1 Ω or less	Always
BAT	16	Battery positive	Body ground	9 to 14 V	Always

HINT:

If the display shows UNABLE TO CONNECT TO VEHICLE when you have connected the cable of the OBD II scan tool or the hand–held tester to the DLC3, turned the ignition switch ON and operated the scan tool, there is a problem on the vehicle side or tool side.

- If the communication is normal when the tool is connected to another vehicle, inspect the DLC3 on the original vehicle.
- If the communication is still impossible when the tool is connected to another vehicle, the problem is probably in the tool itself, so consult the Service Department listed in the tool's instruction manual.

3. INSPECT BATTERY VOLTAGE

Battery Voltage: 11 to 14 V

If voltage is below 11 V, recharge the battery before proceeding.

4. CHECK MIL

(a) The MIL comes on when the ignition switch is turned ON and the engine is not running.

HINT:

If the MIL is not illuminated, troubleshoot the MIL circuit (See page 05–292).

(b) When the engine is started, the MIL should go off. If the MiL remains on, it means that the diagnosis system has detected a malfunction or abnormality in the system.

SFI SYSTEM (April, 2003)

05288–10

HOW TO PROCEED WITH TROUBLESHOOTING

The hand–held tester can be used at step 3, 4, 5, 7, 10.

1	**VEHICLE BROUGHT TO WORKSHOP**

2	**CUSTOMER PROBLEM ANALYSIS (See page 05–4)**

3	**CONNECT HAND–HELD TESTER TO DLC3**

HINT:
If the display indicates a communication fault in the tool, inspect DLC3.

4	**CHECK DTC AND FREEZE FRAME DATA (See page 05–9)**

HINT:
Record or print DTC and freeze frame data, if needed.

5	**CLEAR DTC AND FREEZE FRAME DATA (See page 05–9)**

6	**VISUAL INSPECTION**

7	**SETTING CHECK (TEST) MODE DIAGNOSIS (See page 05–11)**

8	**PROBLEM SYMPTOM CONFIRMATION**

HINT:
If the engine does not start, perform steps 10 and 12 first.

A	Malfunction does not occur
B	Malfunction occurs

B → **GO TO STEP 10**

A

9	SYMPTOM SIMULATION

10	DTC CHECK (See page 05–9)

A	Malfunction code
B	No code

B → GO TO STEP 12

A

11	DTC CHART (See page 05–9)

GO TO STEP 14

12	BASIC INSPECTION (See page 05–13)

A	Wrong parts not confirmed
B	Wrong parts confirmed

B → GO TO STEP 17

A

13	PROBLEM SYMPTOMS TABLE (See page 05–42)

A	Wrong circuit confirmed
B	Wrong parts confirmed

B → GO TO STEP 17

A

14	CHECK ECM POWER SOURCE CIRCUIT (See page 05–273)

15	CIRCUIT INSPECTION

A	Malfunction not confirmed
B	Malfunction confirmed

B → GO TO STEP 18

A

16	CHECK FOR INTERMITTENT PROBLEMS (See page 05–41)

GO TO STEP 18

17	PARTS INSPECTION

18	IDENTIFICATION OF PROBLEM

19	ADJUSTMENT, REPAIR

20	CONFIRMATION TEST

END

05284–12

DIAGNOSTIC TROUBLE CODE CHART

HINT:

- As for the vehicle for MEXICO, refer to Repair Manual 2003 COROLLA (Pub. No. RM938U).
- Parameters listed in the chart may not be exactly the same as your readings due to the type of instrument or other factors.¿

If a malfunction code is displayed during the DTC check in the check mode, check the circuit for the codes listed in the table below. For details of each code, refer to the ”See page” under the respective ”DTC No.” in the DTC chart.

DTC No. (See Page)	Detection Item	Trouble Area	MIL*1	Memory
P0010 (05–44)	Camshaft Position ”A” Actuator Circuit (Bank 1)	• Open or short in oil control valve circuit • Oil control valve • ECM	○	○
P0011 (05–50)	Camshaft Position ”A” –Timing Over–Advanced or System Performance (Bank 1)	• Valve timing • Oil control valve • Camshaft timing gear assy • ECM	○	○
P0012 (05–50)	Camshaft Position ”A” –Timing Over– Retarded (Bank 1)		○	○
P0016 (05–58)	Crankshaft Position – Camshaft Position Correlation (Bank 1 Sensor A)	• Mechanical system (Timing chain has jumped a tooth, chain stretched) • ECM	○	○
P0031 (05–60)	Oxygen Sensor Heater Control Circuit Low (Bank 1 Sensor 1)	• Open or short in heater circuit of heated oxygen sensor • Heated oxygen sensor heater • EFI relay • ECM	○	○
P0032 (05–60)	Oxygen Sensor Heater Control Circuit High (Bank 1 Sensor 1)		○	○
P0037 (05–60)	Oxygen Sensor Heater Control Circuit Low (Bank 1 Sensor 2)		○	○
P0038 (05–60)	Oxygen Sensor Heater Control Circuit High (Bank 1 Sensor 2)		○	○
P0100 (05–65)	Mass or Volume Air Flow Circuit	• Open or short in mass air flow sensor circuit • Mass air flow sensor • ECM	○	○
P0101 (05–72)	Mass or Volume Air Flow Circuit Range/Performance Problem	• Mass air flow sensor	○	○
P0102 (05–65)	Mass or Volume Air Flow Circuit Low Input	• Open or short in mass air flow sensor circuit • Mass air flow sensor • ECM	○	○
P0103 (05–65)	Mass or Volume Air Flow Circuit High Input		○	○
P0110 (05–74)	Intake Air Temperature Circuit	• Open or short in intake air temperature sensor circuit • Intake air temperature sensor (built in mass air flow sensor) • ECM	○	○
P0112 (05–74)	Intake Air Temperature Circuit Low Input		○	○
P0113 (05–74)	Intake Air Temperature Circuit High Input		○	○
P0115 (05–80)	Engine Coolant Temperature Circuit	• Open or short in engine coolant temperature sensor circuit • Engine coolant temperature sensor • ECM	○	○
P0116 (05–85)	Engine Coolant Temperature Circuit Range/Performance Problem	• Cooling system • Engine coolant temperature sensor • Thermostat (water inlet)	○	○
P0117 (05–80)	Engine Coolant Temperature Circuit Low Input	• Open or short in engine coolant temperature sensor circuit • Engine coolant temperature sensor • ECM	○	○
P0118 (05–80)	Engine Coolant Temperature Circuit High Input		○	○
P0120 (05–87)	Throttle/Pedal Position Sensor/ Switch ”A” Circuit	• Throttle position sensor (built in throttle body) • ECM	○	○

DTC No. (See Page)	Detection Item	Trouble Area	MIL*1	Memory
P0121 (05–94)	Throttle/Pedal Position Sensor/ Switch "A" Circuit Range/Performance Problem	• Throttle position sensor (built in throttle body)	○	○
P0122 (05–87)	Throttle/Pedal Position Sensor/ Switch "A" Circuit Low Input	• Throttle position sensor (built in throttle body) • Short in VTA circuit • Open in VC circuit • ECM	○	○
P0123 (05–87)	Throttle/Pedal Position Sensor/ Switch "A" Circuit High Input	• Throttle position sensor (built in throttle body) • Open in VTA circuit • Open in E2 circuit • VC and VTA circuit are short–circuited • ECM	○	○
P0125 (05–96)	Insufficient Coolant Temperature for Closed Loop Fuel Control	• Cooling system • Engine coolant temperature sensor • Thermostat	○	○
P0128 (05–98)	Coolant Thermostat (Coolant Temperature Below Thermostat Regulating Temperature)	• Thermostat • Cooling system • Engine coolant temperature sensor • ECM	○	○
P0130 (05–101)	Oxygen Sensor Circuit (Bank 1 Sensor 1)	• Open or short in heated oxygen sensor (bank 1 sensor 1) circuit • Heated oxygen sensor (bank 1 sensor 1) • Heated oxygen sensor heater (bank 1 sensor 1) • EFI relay • Air induction system • Fuel pressure • Injector • ECM	○	○
P0133 (05–111)	Oxygen Sensor Circuit Slow Response (Bank 1 Sensor 1)	• Open or short in heated oxygen sensor (bank 1 sensor 1) circuit • Heated oxygen sensor (bank 1 sensor 1) • Heated oxygen sensor heater (bank 1 sensor 1) • EFI relay • Air induction system • Fuel pressure • Injector • ECM	○	○
P0134 (05–120)	Oxygen Sensor Circuit No Activity Detected (Bank 1 Sensor 1)	• Open or short in heated oxygen sensor (bank 1 sensor 1) circuit • Heated oxygen sensor (bank 1 sensor 1) • Heated oxygen sensor heater (bank 1 sensor 1) • EFI relay • Air induction system • Fuel pressure • PCV hose connection • PCV valve and hose • Injector • Gas leakage in exhaust system • PCV piping • ECM	○	○
P0136 (05–128)	Oxygen Sensor Circuit Malfunction (Bank 1 Sensor 2)	• Open or short in heated oxygen sensor (bank 1 sensor 2) circuit • Heated oxygen sensor (bank 1 sensor 2) • Heated oxygen sensor heater (bank 1 sensor 2) • EFI relay	○	○

DTC No. (See Page)	Detection Item	Trouble Area	MIL*1	Memory
P0171 (05–136)	System too Lean (Bank 1)	• Air induction system • Injector blockage • Mass air flow sensor • Engine coolant temperature sensor • Fuel pressure • Gas leakage in exhaust system • Open or short in heated oxygen sensor (bank 1, sensor 1) circuit • Heated oxygen sensor (bank 1, sensor 1) • Heated oxygen sensor heater (bank 1, sensor 1) • EFI relay • PCV valve and hose • PCV hose connection • ECM	○	○
P0172 (05–136)	System too Rich (Bank 1)	• Injector leak, blockage • Mass air flow sensor • Engine coolant temperature sensor • Ignition system • Fuel pressure • Gas leakage in exhaust system • Open or short in heated oxygen sensor (bank 1, sensor 1) circuit • Heated oxygen sensor (bank 1, sensor 1) • Heated oxygen sensor heater (bank 1, sensor 1) • EFI relay • ECM	○	○
P0300 (05–149)	Random/Multiple Cylinder Misfire Detected	• Open or short in engine wire • Connector connection • Vacuum hose connection • Ignition system • Injector • Fuel pressure • Mass air flow sensor • Engine coolant temperature sensor • Compression pressure • Valve clearance • Valve timing • PCV hose connection • PCV hose • ECM	○*2	○
P0301 (05–149)	Cylinder 1 Misfire Detected		○*2	○
P0302 (05–149)	Cylinder 2 Misfire Detected		○*2	○
P0303 (05–149)	Cylinder 3 Misfire Detected		○*2	○
P0304 (05–149)	Cylinder 4 Misfire Detected		○*2	○
P0325 (05–163)	Knock Sensor 1 Circuit (Bank 1 or Single Sensor)	• Open or short in knock sensor circuit • Knock sensor (under–torqued or loose) • ECM	○	○
P0327 (05–163)	Knock Sensor 1 Circuit Low Input (Bank 1 or Single Sensor)	• Open or short in knock sensor circuit • Knock sensor (under–torqued or loose) • ECM	○	○
P0328 (05–163)	Knock Sensor 1 Circuit High Input (Bank 1 or Single Sensor)	• Open or short in knock sensor circuit • Knock sensor (under–torqued or loose) • ECM	○	○
P0335 (05–168)	Crankshaft Position Sensor ”A” Circuit	• Open or short in crankshaft position sensor circuit • Crankshaft position sensor • Signal plate (crankshaft) • ECM	○	○
P0339 (05–168)	Crankshaft Position Sensor ”A” Circuit Intermittent	• Open or short in crankshaft position sensor circuit • Crankshaft position sensor • Signal plate (crankshaft) • ECM	—	○

DTC No. (See Page)	Detection Item	Trouble Area	MIL*1	Memory
P0340 (05–173)	Camshaft Position Sensor "A" Circuit (Bank 1 or Single Sensor)	• Open or short in camshaft position sensor circuit • Camshaft position sensor • Camshaft timing pulley • Timing chain has jumped a tooth • ECM	○	○
P0341 (05–173)	Camshaft Position Sensor "A" Circuit Range/Performance (Bank 1 or Single Sensor)	• Open or short in camshaft position sensor circuit • Camshaft position sensor • Camshaft timing pulley • Timing chain has jumped a tooth • ECM	○	○
P0351*3 (05–177)	Ignition Coil "A" Primary/Secondary Circuit	• Ignition system • Open or short in IGF or IGT circuit from ignition coil with igniter to ECM (ignition coil circuit 1 through 4) • Ignition coil with igniter (ignition coil circuit 1 through 4) • ECM	○	○
P0352*3 (05–177)	Ignition Coil "B" Primary/Secondary Circuit		○	○
P0353*3 (05–177)	Ignition Coil "C" Primary/Secondary Circuit		○	○
P0354*3 (05–177)	Ignition Coil "D" Primary/Secondary Circuit		○	○
P0420 (05–186)	Catalyst System Efficiency Below Threshold (Bank 1)	• Gas leakage in exhaust system • Heated oxygen sensor (bank 1 sensor 1, 2) • Three–way catalytic converter	○	○
P0441 (05–193)	Evaporative Emission Control System Incorrect Purge Flow	• Fuel tank cap incorrectly installed • Fuel tank cap cracked or damaged • Vacuum hose cracks, blocked, damaged or disconnected ((1), (2), (3), (4), (5), (6), (7), (8), (9), (10) and (11) in Fig. 1) • Open or short in vapor pressure sensor circuit • Vapor pressure sensor • Open or short in VSV circuit for EVAP • VSV for EVAP • Open or short in VSV circuit for CCV • VSV for CCV • Open or short in VSV circuit for pressure switching valve • VSV for pressure switching valve • Fuel tank cracked, or damaged • Charcoal canister cracked, or damaged • Fuel tank over fill check valve cracked damaged • ECM	○	○
P0442 (05–218)	Evaporative Emission Control System Leak detected (small leak)		○	○
P0446 (05–193)	Evaporative Emission Control System Vent Control Circuit	• Same as DTC No. P0441	○	○
P0451 (05–242)	Evaporative Emission Control System Pressure Sensor Range/Performance	• Open or short in vapor pressure sensor circuit • Vapor pressure sensor • ECM	○	○
P0452 (05–242)	Evaporative Emission Control System Pressure Sensor/Switch Low Input		○	○
P0453 (05–242)	Evaporative Emission Control System Pressure Sensor/Switch High Input		○	○
P0456 (05–218)	Evaporative Emission Control System Leak Detected (very small leak)	• Same as DTC No. P0442	○	○
P0500 (05–247)	Vehicle Speed Sensor "A"	• Open or short in speed sensor circuit • Speed sensor • Combination meter • ECM • Stability control ECU	○	○

DTC No. (See Page)	Detection Item	Trouble Area	MIL*1	Memory
P0505 (05–251)	Idle Air Control System	• Open or short in idle speed control (ISC) valve circuit • Idle speed control (ISC) valve is stuck or closed • A/C switch circuit • Air induction system • PCV valve and hose • ECM	○	○
P0511 (05–251)	Idle Air Control Circuit		○	○
P0560 (05–260)	System Voltage	• Open in back up power source circuit • ECM	○	○
P0606 (05–264)	ECM/PCM Processor	• ECM	○	○
P0617 (05–265)	Starter Relay Circuit High	• Short in Park/Neutral position switch circuit (A/T) • Park/Neutral position switch (A/T) • Clutch start switch (M/T) • ECM	○	○
P0705 (05–379)	Transmission Range Sensor Circuit Malfunction (PRNDL Input)	• Electronic controlled automatic transmission (ECT)	○	○
P0724 (05–384)	Brake Switch "B" Circuit High		○	○
P0741 (05–386)	Torque Converter Clutch Solenoid Performance (Shift Solenoid Valve SL)		○	○
P0751 (05–389)	Shift Solenoid "A" Performance (Shift Solenoid Valve S1)		○	○
P0756 (05–394)	Shift Solenoid "B" Performance (Shift Solenoid Valve S2)		○	○
P0850 (05–379)	Park/Neutral Switch Input Circuit		○	○
P0973 (05–402)	Shift Solenoid "A" Control Circuit Low (Shift Solenoid Valve S1)		○	○
P0974 (05–402)	Shift Solenoid "A" Control Circuit High (Shift Solenoid Valve S1)		○	○
P0976 (05–406)	Shift Solenoid "B" Control Circuit Low (Shift Solenoid Valve S1)		○	○
P0977 (05–406)	Shift Solenoid "B" Control Circuit High (Shift Solenoid Valve S1)		○	○
P2195 (05–101)	Oxygen Sensor Signal Stuck Lean (Bank 1 Sensor 1)	• Open or short in heated oxygen sensor (bank 1 sensor 1) circuit • Heated oxygen sensor (bank 1 sensor 1) • Heated oxygen sensor heater (bank 1 sensor 1) • EFI relay • Air induction system • Fuel pressure • Injector • ECM	○	○
P2196 (05–101)	Oxygen Sensor Signal Stuck Rich (Bank 1 Sensor 1)		○	○
P2716 (05–409)	Pressure Control Solenoid "D" Electrical	• Electronic controlled automatic transmission (ECT)	○	○
P2769 (05–413)	DSL Solenoid Circuit Low (Shift Solenoid Valve DSL)		○	○
P2770 (05–413)	DSL Solenoid Circuit High (Shift Solenoid Valve DSL)		○	○

*1: "○" ... MIL is illuminated, "—" ... MIL is not illuminated.
*2: MIL is illuminated or blinks
*3: This DTC is indicate a malfunction related to primary circuit.

DTC CHECK/CLEAR

NOTICE:

- **If there is no DTC in the normal mode, check the pending fault code using the Continuous Test Results function (Mode 7 for SAE J1979) on the OBD II scan tool or the hand–held tester.**
- **Hand–held tester only:**
  When the diagnosis system is switched from the normal mode to the check mode, all the DTCs and freeze frame data recorded in the normal mode will be erased. So before switching modes, always check the DTCs and freeze frame data, and then write them down.

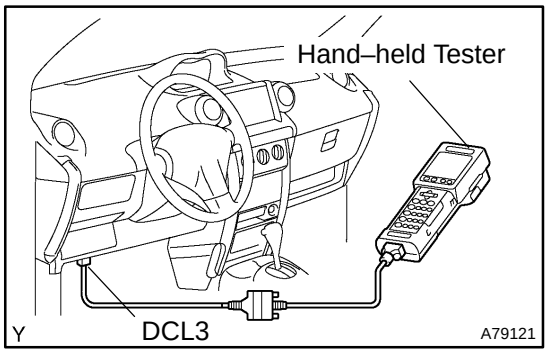

1. CHECK DTC (Using the OBD II scan tool or hand–held tester)

(a) Connect the OBD II scan tool or hand–held tester to the DLC3.

(b) Turn the ignition switch ON.

(c) Use the OBD II scan tool or the hand–held tester to check the DTCs and freeze frame data and then write them down. If you need help with the OBD II scan tool, refer to the scan tool's instruction book.
If there is no DTC in the normal mode, check the pending fault code using the Continuous Test Results function on the OBD II scan tool or the hand–held tester.

(d) See page 05–35 to confirm the details of the DTCs.

NOTICE:

- **When simulating a symptom with the OBD II scan tool (excluding hand–held tester) to check the DTCs, use the normal mode. For code on the DTC chart subject to the "2 trip detection logic", perform either of the following actions.**
- **Turn the ignition switch OFF after the symptom is simulated once. Then repeat the simulation process again. When the problem has been simulated twice, the MIL lights up and the DTCs are recorded in the ECM.**
- **Check the pending fault code using the Continuous Test Results function on the OBD II scan tool.**

2. CLEAR DTC (Using the OBD II scan tool or hand–held tester)

(a) Connect the OBD II scan tool or the hand–held tester to the DLC3.

(b) Turn the ignition switch ON.

(c) Operate the OBD II scan tool or the hand–held tester to erase the codes. All the DTCs and freeze frame data will be erased. (See the OBD II scan tool's instruction book for operating instructions.)

3. CLEAR DTC (Not using the OBD II scan tool or hand–held tester)

(a) Disconnect the battery terminal or remove the EFI fuse from the engine room R/B for more than 60 seconds.

ECM POWER SOURCE CIRCUIT

CIRCUIT DESCRIPTION

When the ignition switch is turned ON, battery positive voltage is applied to the coil which closes the contacts of the EFI main relay (Marked: EFI) and supplies power to terminal +B of the ECM.
This signal causes current to flow to the coil, closing the contacts of the EFI relay and supplying power to terminal +B of the ECM.
If the ignition switch is turned off, the ECM continues to switch on the EFI relay for a maximum of 2 seconds for the initial setting of the ISC valve.

WIRING DIAGRAM

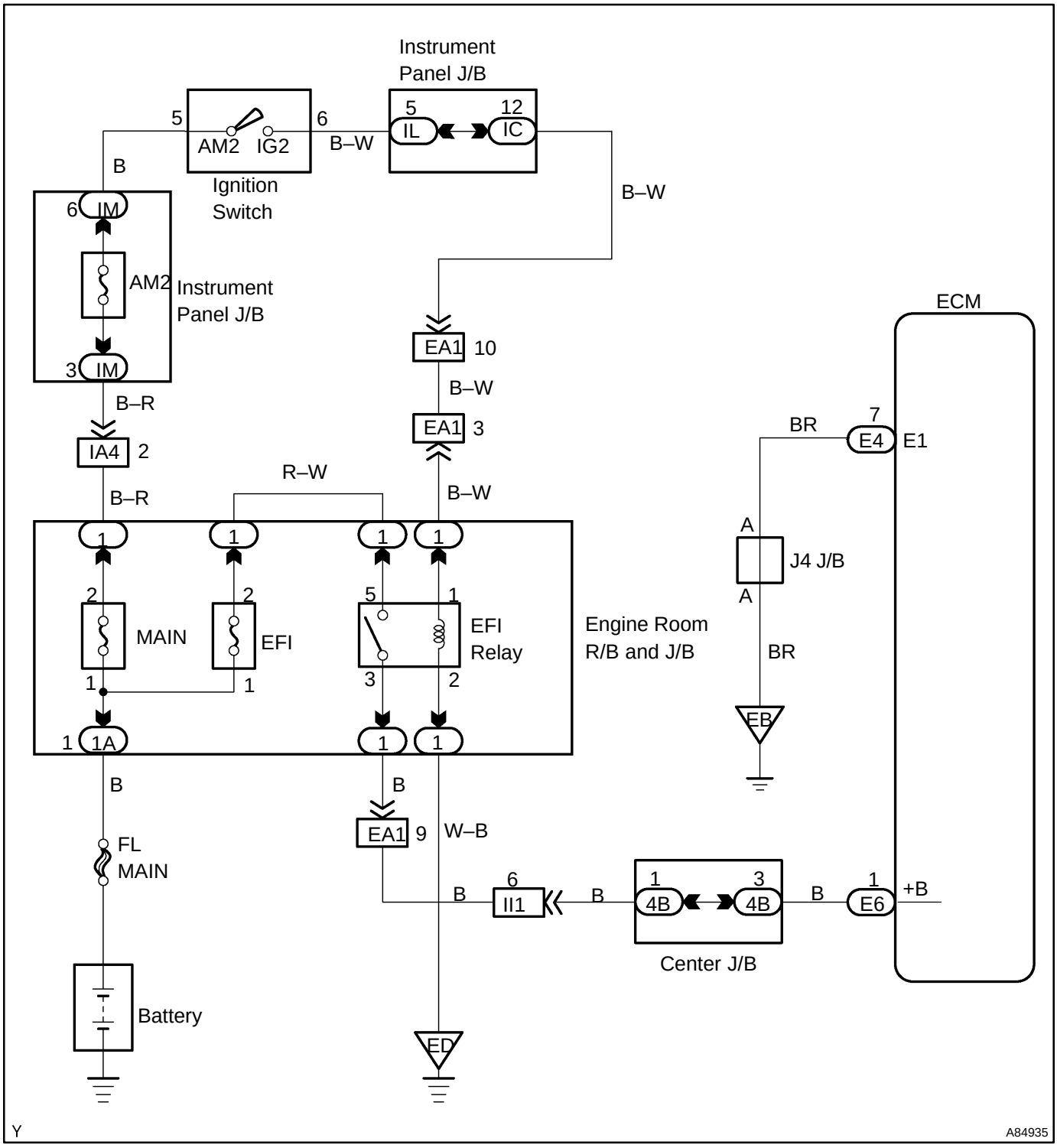

INSPECTION PROCEDURE

1 INSPECT ECM(+B VOLTAGE)

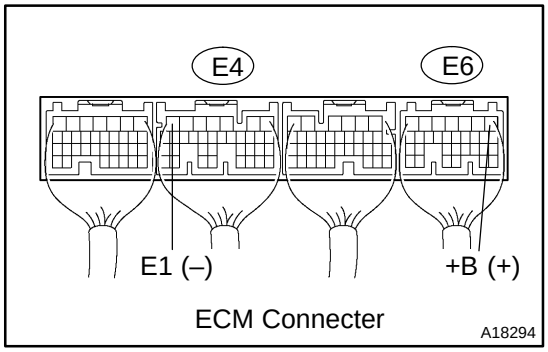

(a) Turn the ignition switch ON.
(b) Measure the voltage between the terminals of the E4 and E6 ECM connectors.

Standard:

Tester Connection	Specified Condition
+B (E6–1) – E1 (E4–7)	8 to 14 V

OK → **REPLACE ECM (See page 10–11)**

NG

2 CHECK HARNESS AND CONNECTOR(ECM – BODY GROUND)

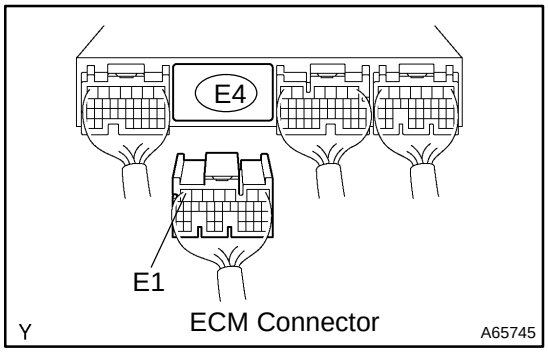

(a) Disconnect the E4 ECM connector.
(b) Check the resistance between the wire harness side connectors.

Standard (Check for open):

Tester Connection	Specified Condition
E1 (E4–7) – Body ground	Below 1 Ω

(c) Reconnect the ECM connector.

NG → **REPAIR OR REPLACE HARNESS OR CONNECTOR**

OK

3 INSPECT IGNITION OR STARTER SWITCH ASSY

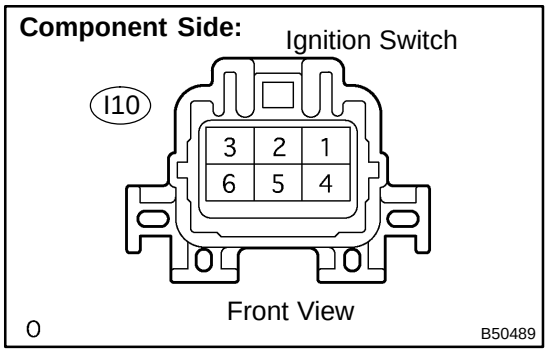

(a) Disconnect the I10 ignition switch connector.
(b) Check for continuity between the connector terminals shown in the chart below.

Switch Position	Tester Connection	Specified Condition
LOCK	All Terminals	No continuity
ACC	1–3	Continuity
ON	1–2, 1–3, 2–3, 5–6	Continuity
START	1–2, 4–5, 4–6, 5–6	Continuity

(c) Reconnect the ignition switch connector.

NG → **REPLACE IGNITION OR STARTER SWITCH ASSY**

OK

4 CHECK FUSE(EFI FUSE)

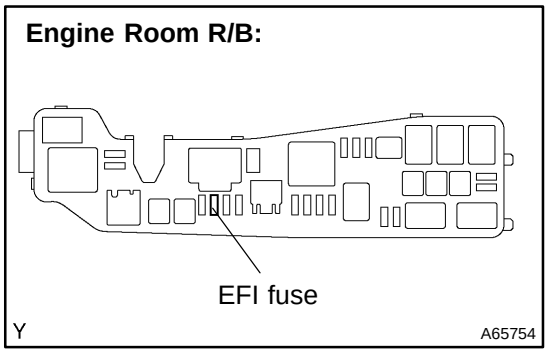

(a) Remove the EFI fuse from the engine room R/B.
(b) Check for continuity in the EFI fuse.
Standard: Continuity
(c) Reinstall the EFI fuse.

NG → **CHECK FOR SHORT IN ALL HARNESSES AND COMPONENTS CONNECTED FUSE**

OK

5 INSPECT EFI RELAY

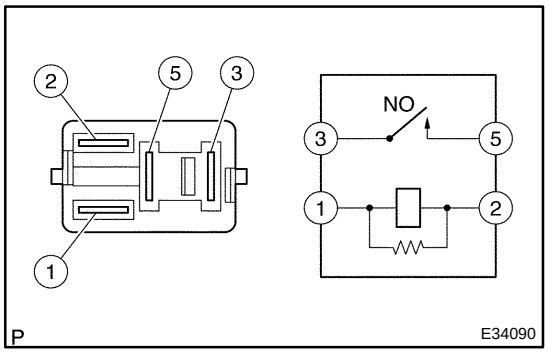

(a) Remove the EFI relay from the engine room R/B.
(b) Check for continuity in the circuit EFI relay.
Standard:

Tester Connection	Specified Condition
1 – 2	Continuity
3 – 5	No continuity
	Continuity (Apply battery voltage to terminals 1 and 2)

(c) Reinstall the EFI fuse.

NG → **REPLACE EFI RELAY**

OK

6	CHECK HARNESS AND CONNECTOR(EFI RELAY – ECM, EFI RELAY – BODY GROUND)

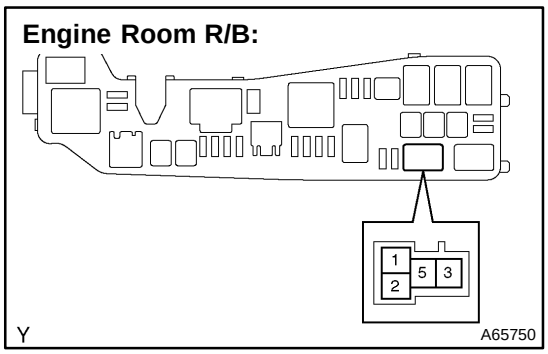

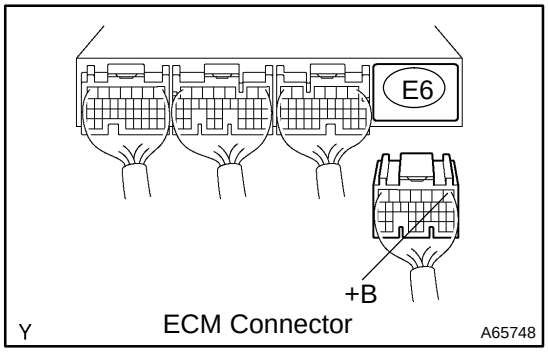

(a) Check the harness and connector between the EFI relay and ECM.
  (1) Remove the EFI relay from the engine room R/B.
  (2) Disconnect the E6 ECM connector.
  (3) Check the resistance between the wire harness side connectors.

Standard (Check for open):

Tester Connection	Specified Condition
EFI relay (3) – +B (E6–1)	Below 1 Ω

Standard (Check for short):

Tester Connection	Specified Condition
EFI relay (3) or +B (E6–1) – Body ground	10 kΩ or higher

  (4) Reconnect the ECM connector.
  (5) Reinstall the EFI relay.

(b) Check the harness and connector between the EFI relay and body ground.
  (1) Remove the EFI relay from the engine room R/B.
  (2) Check the resistance between the wire harness side connector and body ground.

Standard (Check for open):

Tester Connection	Specified Condition
EFI relay (2) – Body ground	Below 1 Ω

  (3) Reinstall the EFI relay.

OK → **REPAIR OR REPLACE HARNESS OR CONNECTOR**

NG

CHECK AND REPAIR HARNESS AND CONNECTOR (TERMINAL +B OF ECM – BATTERY POSITIVE TERMINAL)

05CRL–02

FAIL–SAFE CHART

If any of the following codes is recorded, the ECM enters the fail–safe mode.

DTC No.	Fail–Safe Operation	Fail–Safe Deactivation Conditions
P0031 P0032 P0037 P0038	The heater circuit in which the abnormality is detected is turned off	Ignition switch OFF
P0100 P0102 P0103	Ignition timing is calculated from engine speed and a throttle angle	”Pass” condition detected.
P0110 P0112 P0113	Intake air temperature is fixed at 20˚C (68˚F)	”Pass” condition detected.
P0115 P0117 P0118	Engine coolant temperature is fixed at 80˚C (176˚F)	”Pass” condition detected.
P0120 P0122 P0123	Fuel cut intermittently	”Pass” condition detected and ignition switch OFF
P0121	Fuel cut intermittently	”Pass” condition detected and ignition switch OFF
P0325 P0327 P0328	Max. ignition timing retardation	Ignition switch OFF
P0351 P0352 P0353 P0354	Fuel cut	”Pass” condition detected.

FUEL PUMP CONTROL CIRCUIT

CIRCUIT DESCRIPTION

In the diagram below, when the engine is cranked, current flows from terminal ST2 of the ignition switch to the starter relay coil and also current flows to terminal STA of the ECM (STA signal).
When the STA signal and NE signal are input to the ECM, Tr is turned ON, current flows to the coil of the circuit opening relay, the relay switches on, power is supplied to the fuel pump and the fuel pump operates. While the NE signal is generated (engine running), the ECM keeps Tr ON (circuit opening relay ON) and the fuel pump also keeps operating.

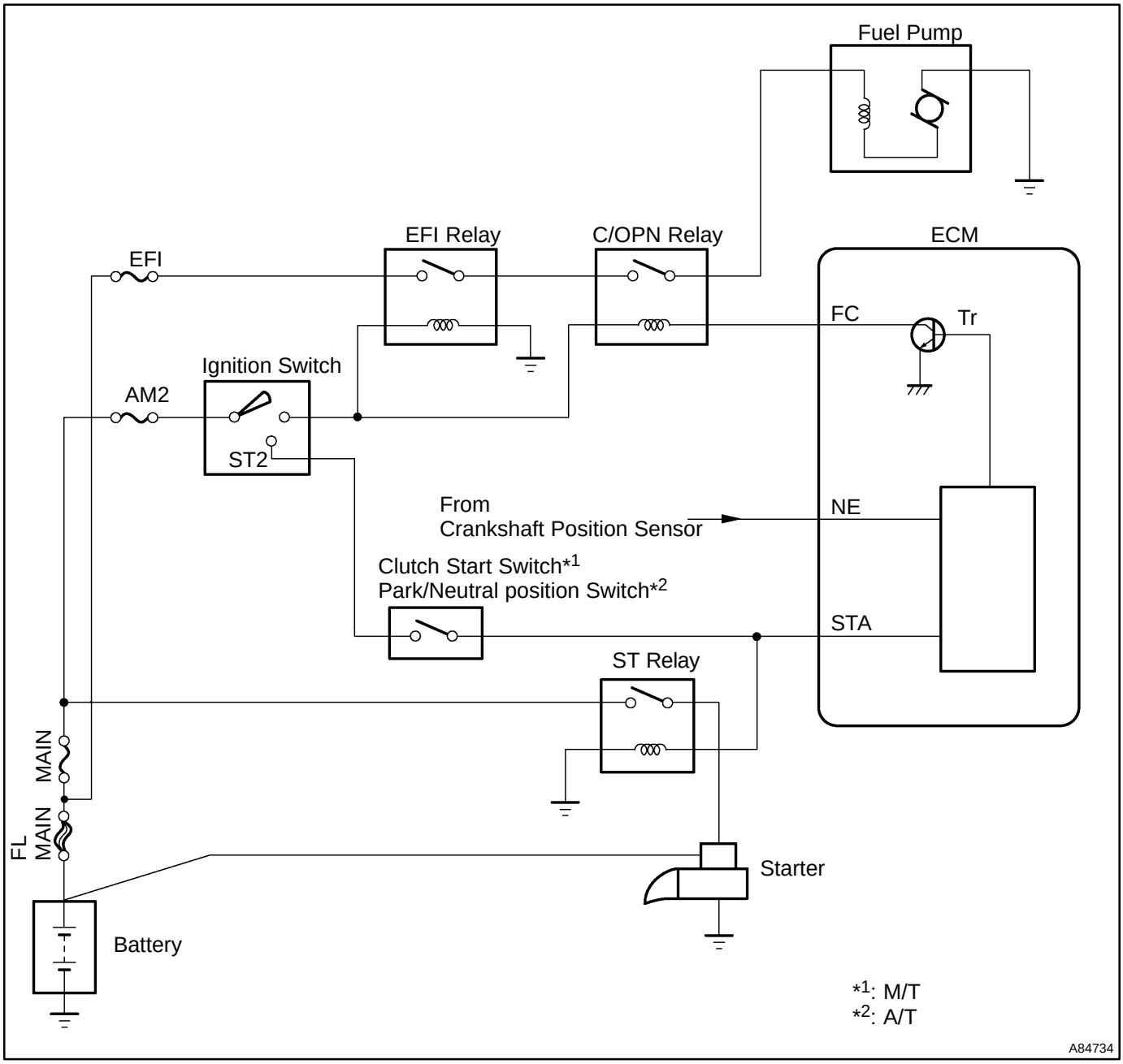

WIRING DIAGRAM

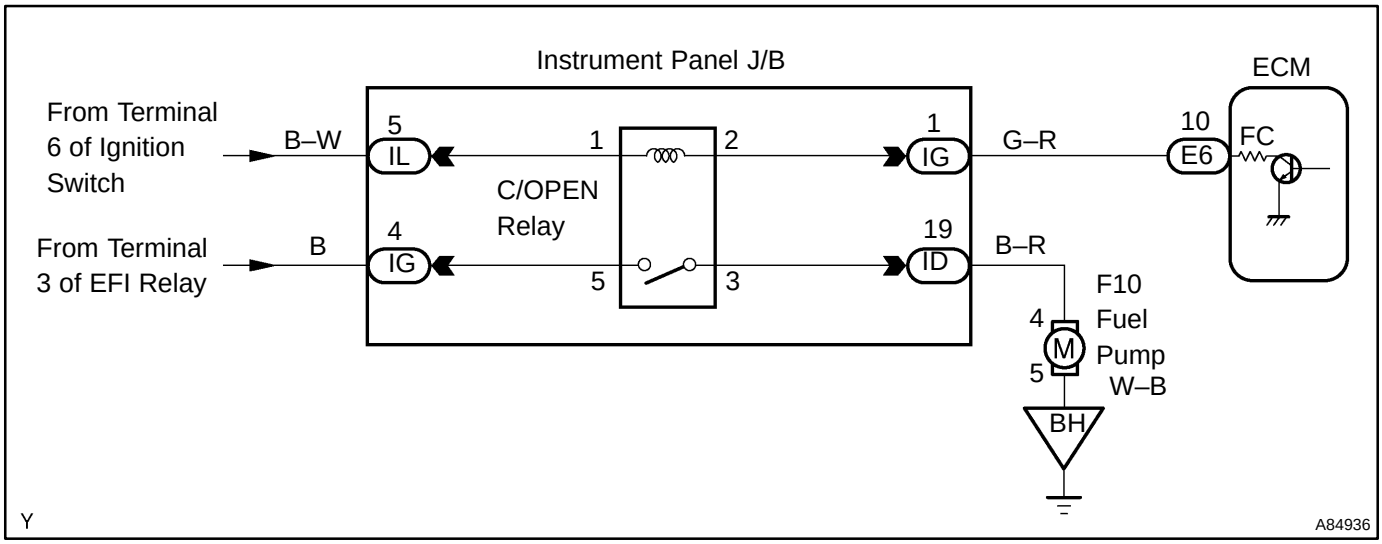

INSPECTION PROCEDURE

Hand–held tester:

1	**PERFORM ACTIVE TEST BY HAND–HELD TESTER(OPERATION OF CIRCUIT OPENING RELAY)**

(a) Connect the hand–held tester to the DLC3.
(b) Turn the ignition switch ON and push the hand–held tester main switch ON.
(c) Select the item ”DIAGNOSIS / ENHANCED OBD II / ACTIVE TEST / FUEL PUMP / SPD”.
(d) Check the relay operation while operating it with the hand–held tester.
Standard: Operating noise can be heard from the relay.

OK	**Go to step 6**

NG

2	**INSPECT ECM POWER SOURCE CIRCUIT (See page 05–273)**

NG	**REPAIR OR REPLACE POWER SOURCE CIRCUIT**

OK

3 INSPECT CIRCUIT OPENING RELAY

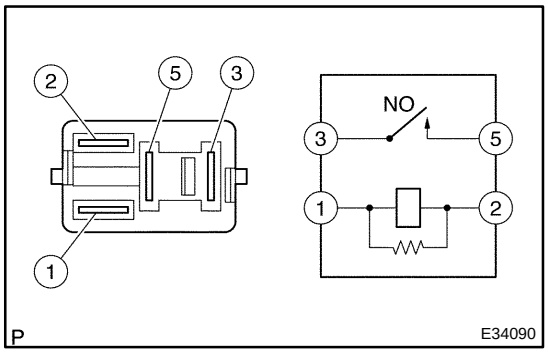

(a) Remove the circuit opening relay from the instrument panel J/B.

(b) Check for continuity in the circuit opening relay.

Standard:

Tester Connection	Specified Condition
1 – 2	Continuity
3 – 5	No continuity
	Continuity (Apply battery voltage to terminals 1 and 2)

(c) Reinstall the circuit opening relay.

NG → **REPLACE CIRCUIT OPENING RELAY**

OK

4 INSPECT ECM(FC VOLTAGE)

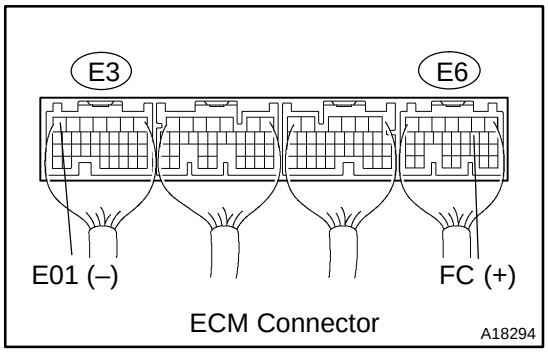

(a) Turn the ignition switch ON.

(b) Measure the voltage between the terminals of the E3 and E6 ECM connectors.

Standard:

Tester Connection	Specified Condition
FC (E6–10) – E01 (E3–7)	9 to 14 V

OK → **REPLACE ECM (See page 10–11)**

NG

5 CHECK HARNESS AND CONNECTOR(EFI RELAY – CIRCUIT OPENING RELAY)

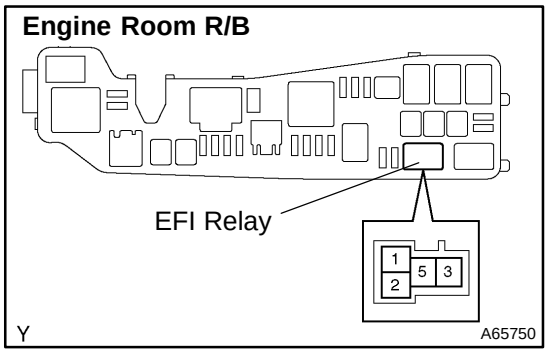

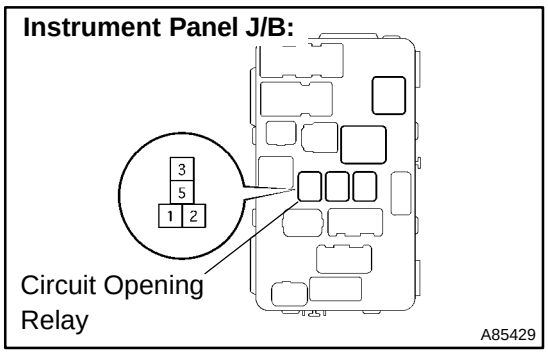

(a) Remove the EFI relay from the engine room R/B.
(b) Remove the circuit opening relay from the instrument panel J/B.
(c) Check the resistance between the wire harness side connectors.

Standard (Check for open):

Tester Connection	Specified Condition
EFI relay (1) – Circuit opening relay (1)	Below 1 Ω
EFI relay (3) – Circuit opening relay (5)	

Standard (Check for short):

Tester Connection	Specified Condition
EFI relay (1) or Circuit opening relay (1) – Body ground	10 kΩ or higher
EFI relay (3) or Circuit opening relay (5) – Body ground	

(d) Reinstall the circuit opening relay.
(e) Reinstall the EFI relay.

NG → **REPAIR OR REPLACE HARNESS OR CONNECTOR**

OK

REPLACE ECM (See page 10–11)

6 INSPECT FUEL PUMP (See page 11–7)

NG → **REPAIR OR REPLACE FUEL PUMP (See page 11–16)**

OK

7	CHECK HARNESS AND CONNECTOR(CIRCUIT OPENING RELAY – FUEL PUMP, FUEL PUMP – BODY GROUND)

Instrument Panel J/B:

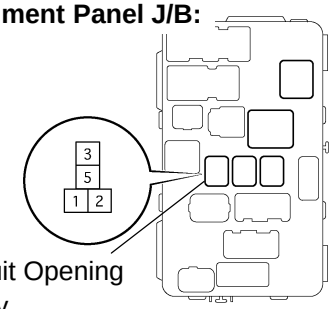

Wire Harness Side:

F10 Fuel Pump Connector



(a) Remove the circuit opening relay from the instrument panel J/B.

(b) Disconnect the F10 fuel pump connector.

(c) Check the resistance between the wire harness side connectors.

Standard (Check for open):

Tester Connection	Specified Condition
Circuit opening relay (3) – Fuel pump (F10–4)	Below 1 Ω
Fuel pump (F10–5) – Body ground	

Standard (Check for short):

Tester Connection	Specified Condition
Circuit opening relay (3) or Fuel pump (F10–4) – Body ground	10 kΩ or higher

(d) Reconnect the fuel pump connector.

(e) Reinstall the circuit opening relay.

NG → **REPAIR OR REPLACE HARNESS OR CONNECTOR**

OK

REPLACE ECM (See page 10–11)

OBD II scan tool (excluding hand–held tester):

1	CHECK OPERATION OF FUEL PUMP

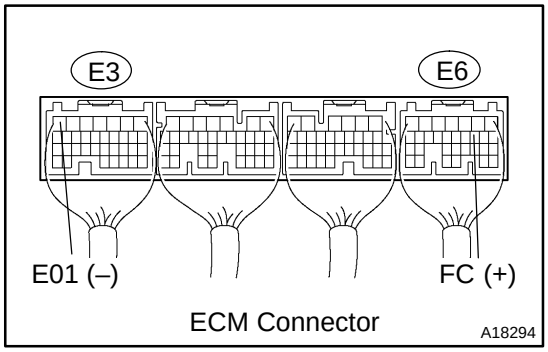

(a) Turn the ignition switch ON.
(b) Connect between terminals FC and E01 of the ECM connector.
(c) Check for fuel pressure in the fuel inlet hose when it is pinched off.
Result: There is pressure in fuel inlet hose.

HINT:
At this time, you will hear the fuel flowing sound.

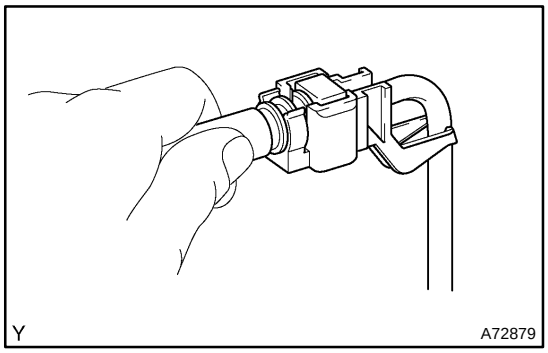

OK → **PROCEED TO NEXT CIRCUIT INSPECTION SHOWN ON PROBLEM SYMPTOMS TABLE (See page 05–42)**

NG

2	INSPECT ECM POWER SOURCE CIRCUIT (See page 05–273)

NG → **REPAIR OR REPLACE ECM POWER SOURCE CIRCUIT**

OK

3	INSPECT CIRCUIT OPENING RELAY

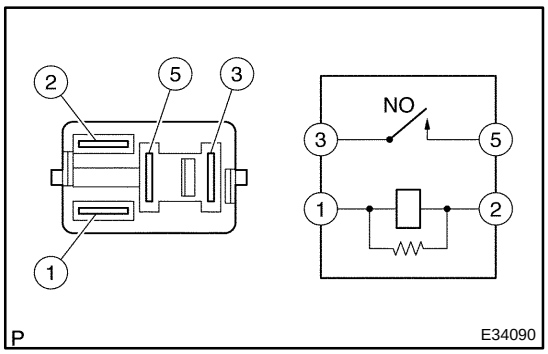

(a) Remove the circuit opening relay from the instrument panel J/B.
(b) Check for continuity in the circuit opening relay.
Standard:

Tester Connection	Specified Condition
1 – 2	Continuity
3 – 5	No continuity
	Continuity (Apply battery voltage to terminals 1 and 2)

(c) Reinstall the circuit opening relay.

NG → **REPLACE CIRCUIT OPENING RELAY**

OK

4 INSPECT ECM(FC VOLTAGE)

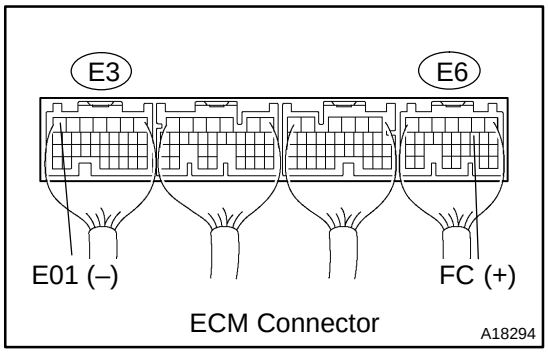

(a) Turn the ignition switch ON.
(b) Measure the voltage between the terminals of the E3 and E6 ECM connectors.

Standard:

Tester Connection	Specified Condition
FC (E6–10) – E01 (E3–7)	9 to 14 V

OK → **REPLACE ECM (See page 10–11)**

NG

5 CHECK HARNESS AND CONNECTOR(EFI RELAY – CIRCUIT OPENING RELAY)

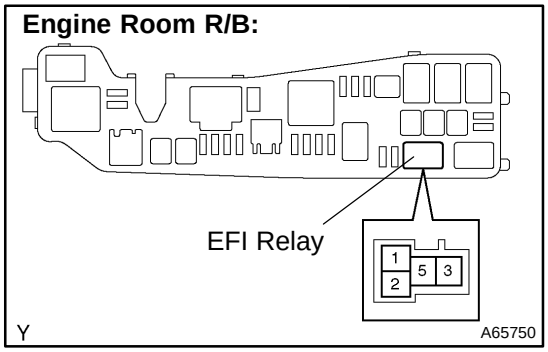

(a) Remove the EFI relay from the engine room R/B.
(b) Remove the circuit opening relay from the instrument panel J/B.
(c) Check the resistance between the wire harness side connectors.

Standard (Check for open):

Tester Connection	Specified Condition
EFI relay (1) – Circuit opening relay (1)	Below 1 Ω
EFI relay (3) – Circuit opening relay (5)	

Standard (Check for short):

Tester Connection	Specified Condition
EFI relay (1) or Circuit opening relay (1) – Body ground	10 kΩ or higher
EFI relay (3) or Circuit opening relay (5) – Body ground	

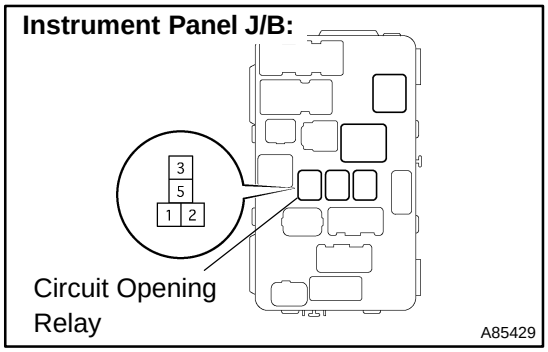

(d) Reinstall the circuit opening relay.
(e) Reinstall the EFI relay.

NG → **REPAIR OR REPLACE HARNESS AND CONNECTOR**

OK

REPLACE ECM (See page 10–11)

6 INSPECT FUEL PUMP

NG → **REPAIR OR REPLACE FUEL PUMP**

OK

7	CHECK HARNESS AND CONNECTOR(CIRCUIT OPENING RELAY – FUEL PUMP,FUEL PUMP – BODY GROUND)

Instrument Panel J/B:

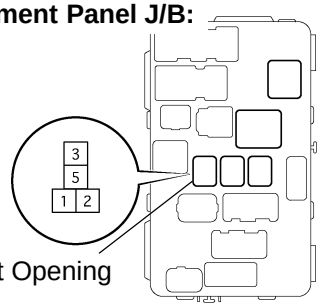

Wire Harness Side

F10 Fuel Pump Connector



(a) Remove the circuit opening relay from the instrument panel J/B.
(b) Disconnect the F10 fuel pump connector.
(c) Check the resistance between the wire harness side connectors.

Standard (Check for open):

Tester Connection	Specified Condition
Circuit opening relay (3) – Fuel pump (F10–4)	Below 1 Ω
Fuel pump (F10–5) – Body ground	

Standard (Check for short):

Tester Connection	Specified Condition
Circuit opening relay (3) or Fuel pump (F10–4) – Body ground	10 kΩ or higher

(d) Reconnect the fuel pump connector.
(e) Reinstall the circuit opening relay.

NG → **REPAIR OR REPLACE HARNESS AND CONNECTOR**

OK

REPLACE ECM (See page 10–11)

05CRJ–02

BASIC INSPECTION

When the malfunction is not confirmed in the DTC check, troubleshooting should be carried out in all the possible circuits considered as causes of the problem. In many cases, by carrying out the basic engine check shown in the following flowchart, the location causing the problem can be found quickly and efficiently. Therefore, using this check is essential in the engine troubleshooting.

1	CHECK BATTERY VOLTAGE

NOTICE:
Carry out this check with the engine stopped and ignition switch OFF.

	OK	NG
Voltage	11 V or more	Less than 11 V

NG → **CHARGE OR REPLACE BATTERY**

OK

2	CHECK IF ENGINE WILL CRANK

NG → **PROCEED TO PROBLEM SYMPTOMS TABLE ON PAGE 05–42**

OK

3	CHECK IF ENGINE STARTS

NG → **GO TO STEP 7**

OK

4	CHECK AIR FILTER

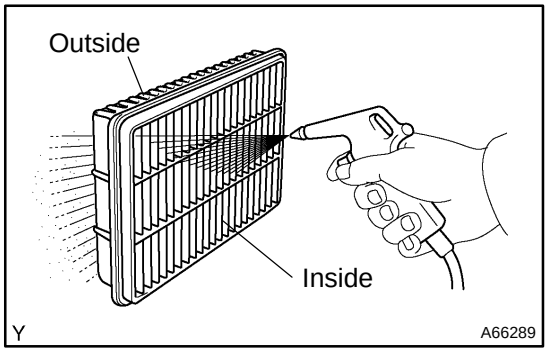

(a) Visually check that the air filter is not excessively dirty or oily.

NOTICE:
If necessary, clean the filter with compressed air. First blow from the inside thoroughly, then blow from the outside of the filter.

NG → **CLEAN OR REPLACE**

OK

5	CHECK IDLE SPEED (See page 14–1)

NG → **PROCEED TO PROBLEM SYMPTOMS TABLE ON PAGE 05–42**

OK

6	CHECK IGNITION TIMING (See page 14–1)

NG → PROCEED TO PAGE 14–1 AND CONTINUE TO TROUBLESHOOT

OK

PROCEED TO PROBLEM SYMPTOMS TABLE ON PAGE 05–42

7	CHECK FUEL PRESSURE (See page 11–5)

NG → PROCEED TO PAGE 11–1 AND CONTINUE TO TROUBLESHOOT

OK

8	CHECK FOR SPARK (See page 18–1)

NG → PROCEED TO PAGE 18–1 AND CONTINUE TO TROUBLESHOOT

OK

PROCEED TO PROBLEM SYMPTOMS TABLE ON PAGE 05–42

05DIF–01

LIST OF DISABLE A MONITOR

HINT:

This table indicates ECM monitoring status for the items in the upper columns if the DTCs in each line on the left are being set.

Monitor disablement (○−not disabled, ×−disabled, N−not applicable)

Monitor detected malfunction	Fault code	Component/system	P0010, P0020 VVT VSV 1, 2	P0011 VVT System 1 – Advance	P0012 VVT System 1 – Retard	P0016, P0018 VVT System – Misalinment	P0021 VVT System 2 – Advance	P0022 VVT System 2 – Retard	P0030–P0050 Fr O2S heater	P0100, P0101 MAF sensor	P0105, P0106 MAP sensor	P0110 IAT sensor	P0115, P0116 ECT sensor	P0120, P0121 TP sensor	P0125 insufficient ECT for Closed Loop	P0128 Thermostat	P0130–P0153 Fr O2S	P0134, P0154 Fr O2S, A/F sensor (No Activity)	P0135, P0155 A/F sensor heater	P0136, P0156 Rr O2S	P0141–P0167 Rr O2S heater	P0171, P0172 Fuel system	P0174, P0175 Fuel system	P0300–P0308 Misfire	P0325, P0330 Knock sensor	P0335 CKP sensor	P0340, P0341 CMP sensor	P0340–P0346 VVT sensor 1, 2	P0351–P0358 Ignitor	P0385 CKP sensor 2	P0401 EGR system (closed)	P0402 EGR system (open)	P0405 Lift sensor	P0409 Lift sensor	P0420, P0430 Catelyst
	P0010, P0020	VVT VSV 1, 2		○	○	○	○	○	○	○	○	○	○	○	○	○	×	○	○	○	○	○	×	○	○	○	○	○	○	○	○	○	○	○	○
	P0011	VVT System 1 – Advance	○		○	×	○	×	○	○	○	○	○	○	○	○	×	○	○	○	○	○	×	×	○	○	○	○	○	○	×	×	○	○	×
	P0012	VVT System 1 – Retard	○	○		×	○	×	○	○	○	○	○	○	○	○	×	○	○	○	○	○	×	×	○	○	○	○	○	○	×	×	○	○	×
	P0016, P0018	VVT System – Misalinment	○	○	○		○	○	○	○	○	○	○	○	○	○	○	○	○	○	○	○	○	○	○	○	○	○	○	○	○	○	○	○	○
	P0021	VVT System 2 – Advance	○	○	×	×		○	○	○	○	○	○	○	○	○	×	○	○	○	○	○	×	×	○	○	○	○	○	○	×	×	○	○	×
	P0022	VVT System 2 – Retard	○	○	×	×	○		○	○	○	○	○	○	○	○	×	○	○	○	○	○	×	×	○	○	○	○	○	○	×	×	○	○	×
	P0030–P0050	Fr O2S heater	○	○	○	○	○	○		○	○	○	○	○	○	○	×	×	×	N	×	○	×	×	○	○	○	○	○	○	×	×	○	○	×
	P0100, P0101	MAF sensor	○	×	×	○	×	×	○		○	○	○	○	×	○	×	×	×	×	×	○	×	×	×	○	○	○	○	○	×	×	○	○	×
	P0105, P0106	MAP sensor	○	×	×	○	×	×	○	○		○	○	○	×	○	×	×	×	×	×	○	×	×	×	○	○	○	○	○	×	×	○	○	×
	P0110	IAT sensor	○	○	○	○	○	○	○	○	○		○	○	○	○	×	×	×	○	×	○	○	○	×	○	○	○	○	○	×	×	○	○	○
	P0115, P0116	ECT sensor	○	×	×	×	×	×	○	○	×	○			○	×	×	×	×	○	×	○	○	×	×	○	○	○	○	○	×	×	○	×	×
	P0120, P0121	TP sensor	○	○	○	○	○	○	○	○	○	×	○	○		○	○	×	×	○	×	○	○	×	×	×	○	○	○	○	×	×	○	○	×
	P0125	insufficient ECT for Closed Loop	○	×	×	○	×	×	○	○	×	○	×	○	○		○	×	×	×	×	○	○	×	×	×	○	○	○	○	×	×	○	×	×
	P0128	Thermostat	○	○	○	○	○	○	○	○	○	○	○	○	○	○		○	○	○	○	○	○	○	○	○	○	○	○	○	○	○	○	○	○
	P0130–P0153	Fr O2S	○	○	○	○	○	○	○	○	○	○	○	○	○	○	×		×	N	×	○	○	○	○	○	○	○	○	○	×	×	○	○	×
	P0134, P0154	Fr O2S, A/F sensor (No Activity)	○	○	○	○	○	○	○	○	○	○	○	○	○	○	×	×		×	×	○	×	×	×	○	○	○	○	○	×	×	○	○	×
	P0135, P0155	A/F sensor heater	○	○	○	○	○	○	○	○	○	○	○	○	○	○	×	N	N		×	○	×	×	○	○	○	○	○	○	×	×	○	○	×
	P0136, P0156	Rr O2S	○	○	○	○	○	○	○	○	○	○	○	○	○	○	○	○	○	○		○	○	○	○	○	○	○	○	○	○	○	○	○	○
	P0141–P0167	Rr O2S heater	○	○	○	○	○	○	○	○	○	○	○	○	○	○	○	○	○	○	×		○	○	○	○	○	○	○	○	○	○	○	○	×
	P0171, P0172	Fuel system	○	○	○	○	○	○	○	○	○	○	○	○	○	○	×	×	×	○	×	○			○	○	○	○	○	○	○	○	×	×	○	×
	P0174, P0175	Fuel system	○	○	○	○	○	○	○	○	○	○	○	○	○	○	×	×	×	○	×	○			○	○	○	○	○	○	○	○	×	×	○	×
	P0300–P0308	Misfire	○	○	○	○	○	○	○	○	○	○	○	○	○	○	×	×	×	○	×	○	○	○		○	○	○	○	○	○	○	×	×	○	×
	P0325, P0330	Knock sensor	○	○	○	○	○	○	○	○	○	○	○	○	○	○	○	○	○	○	○	○	○	○	○		○	○	○	○	○	○	×	×	○	○
	P0335	CKP sensor	○	×	×	○	×	×	○	○	×	○	×	○	○	○	×	×	×	○	×	○	×	×	×	×		○	○	○	○	○	×	×	○	×
	P0340, P0341	CMP sensor	○	×	×	○	×	×	○	○	×	○	×	○	○	○	×	×	×	○	×	○	×	×	×	×	○		○	○	○	○	×	×	○	×
	P0340–P0346	VVT sensor 1, 2	○	○	○	○	○	○	○	○	○	○	○	○	○	○	×	○	○	○	○	○	○	○	○	○	○	○		○	○	○	○	○	○
	P0351–P0358	Ignitor	○	○	○	○	○	○	○	○	○	○	○	○	○	○	×	○	○	○	○	○	×	×	○	○	○	○	○		○	×	×	○	×
	P0385	CKP sensor 2	○	×	×	○	×	×	○	○	×	○	×	○	○	○	×	×	×	○	×	○	×	×	×	×	○	○	○	○		○	×	×	○	×
	P0401	EGR system (closed)	○	○	○	○	○	○	○	○	○	○	○	○	○	○	×	○	○	○	○	○	×	×	○	○	○	○	○	○	○		○	○	×
	P0402	EGR system (open)	○	○	○	○	○	○	○	○	○	○	○	○	○	○	×	×	×	○	×	○	×	×	○	○	○	○	○	○	○	○		○	○	×
	P0405, P0409	Lift sensor	○	○	○	○	○	○	○	○	○	○	○	○	○	○	○	○	○	○	○	○	○	○	○	○	○	○	○	○	○	○	○		○	○
	P0420, P0430	Catelyst	○	○	○	○	○	○	○	○	○	○	○	○	○	○	○	○	○	○	○	○	○	○	○	○	○	○	○	○	○	○	○	○		
	P0442–P0456	EVAP system	○	○	○	○	○	○	○	○	○	○	○	○	○	○	○	×	×	○	×	○	○	○	○	○	○	○	○	○	○	○	○	○	○	○
	P0450, P0451	EVAP press sensor	○	○	○	○	○	○	○	○	○	○	○	○	○	○	○	○	○	○	○	○	○	○	○	○	○	○	○	○	○	○	○	○	○	○
	P0500	VSS	○	○	○	○	○	○	○	○	○	○	○	○	○	○	×	×	×	○	×	○	×	×	×	○	○	○	○	○	×	×	○	○	×
	P0505, P0511	IAC valve	○	○	○	○	○	○	○	○	○	○	○	○	○	○	○	×	○	○	○	○	○	○	○	○	○	○	○	○	○	○	○	○	○	○
	P0510	Idle switch	○	○	○	○	○	○	○	×	○	×	○	○	○	○	×	×	○	○	×	○	×	×	×	○	○	○	○	○	○	○	×	○	○	×
	P0560	Battery	○	○	○	○	○	○	○	○	○	○	○	○	○	○	○	○	○	○	○	○	○	○	○	○	○	○	○	○	○	○	○	○	○	○
	P0617	Starter signal	○	○	○	○	○	○	○	○	○	○	○	○	○	○	○	○	○	○	○	○	○	○	○	○	○	○	○	○	○	○	○	○	○	○
	P0705	Shift lever position switch	○	○	○	○	○	○	○	○	○	○	○	○	○	○	○	○	○	○	○	○	○	○	○	○	○	○	○	○	○	○	○	○	○	○
	P0710	Trans fluid temp sensor	○	○	○	○	○	○	○	○	○	○	○	○	○	○	○	○	○	○	○	○	○	○	○	○	○	○	○	○	○	○	○	○	○	○
	P0715–P0717	Output speed sensor	○	○	○	○	○	○	○	○	○	○	○	○	○	○	○	○	○	○	○	○	○	○	○	○	○	○	○	○	○	○	○	○	○	○
	P0715–P0717	Input speed sensor	○	○	○	○	○	○	○	○	○	○	○	○	○	○	○	○	○	○	○	○	○	○	○	○	○	○	○	○	○	○	○	○	○	○
	P0724	Stop lamp switch	○	○	○	○	○	○	○	○	○	○	○	○	○	○	○	○	○	○	○	○	○	○	○	○	○	○	○	○	○	○	○	○	○	○
	P0741–P0796	Trans solenoid (function)	○	○	○	○	○	○	○	○	○	○	○	○	○	○	○	○	○	○	○	○	○	○	○	○	○	○	○	○	○	○	○	○	○	○
	P0748–P0798	Trans solenoid (range)	○	○	○	○	○	○	○	○	○	○	○	○	○	○	○	○	○	○	○	○	○	○	○	○	○	○	○	○	○	○	○	○	○	○
	P0850	PNP switch	○	○	○	○	○	○	○	○	○	○	○	○	○	○	○	○	○	○	○	○	○	○	○	×	○	○	○	○	○	○	○	○	○	○
	P1010, P1020	VVTL	○	○	○	○	○	○	○	○	○	○	○	○	○	○	×	○	○	○	○	○	×	×	○	○	○	○	○	○	○	○	○	○	○	○
	P1100	BARO sensor	○	○	○	○	○	○	○	○	○	○	○	○	○	○	○	×	○	○	×	○	○	○	○	○	○	○	○	○	○	○	○	○	○	○
	P1120, P1121	Accel position sensor	○	○	○	○	○	○	○	○	○	○	○	○	○	○	○	○	○	○	○	○	○	○	○	○	○	○	○	○	○	○	○	○	○	○
	P1125, P1128	Throttle motor	○	○	○	○	○	○	○	○	○	○	○	○	○	○	○	○	○	○	○	○	○	○	○	○	○	○	○	○	○	○	○	○	○	○
	P1126	Electronic magnet clutch	○	○	○	○	○	○	○	○	○	○	○	○	○	○	○	○	○	○	○	○	○	○	○	○	○	○	○	○	○	○	○	○	○	○
	P1129	Electronic throttle system	○	○	○	○	○	○	○	○	○	○	○	○	○	○	○	○	○	○	○	○	○	○	○	○	○	○	○	○	○	○	○	○	○	○
	P1400, P1401	Sub–TP sensor	○	○	○	○	○	○	○	○	○	○	○	○	○	○	○	×	×	○	×	○	○	○	○	○	○	○	○	○	○	○	○	○	○	○
	P1405, P1406	Turbo press sensor	○	○	○	○	○	○	○	○	○	○	○	○	○	○	○	○	○	○	○	○	○	○	○	○	○	○	○	○	○	○	○	○	○	○
	P1430	HC adsorber ACT press sensor	○	○	○	○	○	○	○	○	○	○	○	○	○	○	○	○	○	○	○	○	○	○	○	○	○	○	○	○	○	○	○	○	○	○
	P1511, P1512	Turbo VSV	○	○	○	○	○	○	○	○	○	○	○	○	○	○	○	○	○	○	○	○	○	○	○	○	○	○	○	○	○	○	○	○	○	○
	P1605	Knock control module	○	○	○	○	○	○	○	○	○	○	○	○	○	○	○	○	○	○	○	○	○	○	○	○	○	○	○	○	○	○	○	○	○	○
	P1652–P1662	Turbo VSV 1 – 4	○	○	○	○	○	○	○	○	○	○	○	○	○	○	○	○	○	○	○	○	○	○	○	○	○	○	○	○	○	○	○	○	○	○
	P2196, P2198	A/F sensor (rationality)	○	○	○	○	○	○	N	○	○	○	○	○	○	○	×	N	N		×	○	○	○	○	○	○	○	○	○	○	×	×	○	○	×
	P2237, P2240	A/F sensor (open)	○	○	○	○	○	○	N	○	○	○	○	○	○	○	×	N	N		×	○	○	○	○	○	○	○	○	○	○	×	×	○	○	×
	P2714–P2759	Trans solenoid (SLU–SLD)	○	○	○	○	○	○	○	○	○	○	○	○	○	○	○	○	○	○	○	○	○	○	○	○	○	○	○	○	○	○	○	○	○	○
	P2A00, P2A03	A/F sensor (slow response)	○	○	○	○	○	○	N	○	○	○	○	○	○	○	×	N	N	○	×	○	○	○	○	○	○	○	○	○	○	×	×	○	○	×

G26588

Monitor disablement (○—not disabled, ×—disabled, N—not applicable)

Fault code	Component/system	P0440–P0446 EVAP system	P0450, P0451 EVAP press sensor	P0500 VSS (ECT2 sensor)	P0500 VSS (ECT1 sensor, non-ECT)	P0500 VSS (M/T)	P0505, P0511 IAC valve	P0510 Idle switch	P0560 Battery	P0617 Starter signal	P0705 Shift lever position switch	P0710 Trans fluid temp sensor	P0715–P0717 Output speed sensor	P0715–P0717 Input speed sensor	P0724 Stop lamp switch	P0741–P0796 Trans solenoid (function) *1	P0741–P0796 Trans solenoid (function) *2	P0748–P0798 Trans solenoid (range)	P0850 PNP switch	P1010, P1020 VVTL	P1100 BARO sensor	P1120, P1121 Accel position sensor	P1125, P1128 Throttle motor	P1126 Electronic magnet clutch	P1129 Electronic throttle system	P1400, P1401 Sub–TP sensor	P1405, P1406 Turbo press sensor	P1430 HC adsorber ACT press sensor	P1511, P1512 Turbo VSV	P1605 Knock control module	P1652–P1662 Turbo VSV 1 – 4	P2196, P2198 A/F sensor (rationality)	P2237, P2240 A/F sensor (open)	P2714–P2759 Trans solenoid (SLU–SLD)	P2A00, P2A03 A/F sensor (slow response)
Monitor detected malfunction	P0010, P0020 VVT VSV 1, 2	○	○	○	○	○	○	○	○	○	○	○	○	○	○	×	○	○	○	○	○	○	○	○	○	○	○	○	○	○	○	○	○	○	○
	P0011 VVT System 1 – Advance	×	○	○	○	○	×	○	○	○	○	○	○	○	○	○	○	○	○	○	○	○	○	○	○	○	○	○	○	○	○	○	○	○	○	○
	P0012 VVT System 1 – Retard	×	○	○	○	○	×	○	○	○	○	○	○	○	○	○	○	○	○	○	○	○	○	○	○	○	○	○	○	○	○	○	○	○	○	○
	P0016, P0018 VVT System – Misalinment	○	○	○	○	○	○	○	○	○	○	○	○	○	○	○	○	○	○	○	○	○	○	○	○	○	○	○	○	○	○	○	○	○	○	○
	P0021 VVT System 2 – Advance	×	○	○	○	○	×	○	○	○	○	○	○	○	○	○	○	○	○	○	○	○	○	○	○	○	○	○	○	○	○	○	○	○	○	○
	P0022 VVT System 2 – Retard	×	○	○	○	○	×	○	○	○	○	○	○	○	○	○	○	○	○	○	○	○	○	○	○	○	○	○	○	○	○	○	○	○	○	○
	P0030–P0050 Fr O2S heater	○	○	○	○	○	○	○	○	○	○	○	○	○	○	×	○	○	○	○	○	○	○	○	○	○	○	○	○	○	○	○	N	○	○	N
	P0100, P0101 MAF sensor	×	○	○	○	×	×	○	○	○	○	○	○	○	○	×	○	○	○	×	○	○	○	○	○	○	○	○	○	○	○	○	×	×	○	×
	P0105, P0106 MAP sensor	×	○	○	○	×	×	○	○	○	○	○	○	○	○	×	○	○	○	×	○	○	○	○	○	○	○	○	○	○	○	○	×	×	○	×
	P0110 IAT sensor	×	○	○	○	○	○	○	○	○	○	○	○	○	○	×	○	○	○	○	○	○	○	○	○	○	○	○	○	○	○	○	×	×	○	×
	P0115, P0116 ECT sensor	×	○	○	○	×	×	○	○	○	○	○	○	○	○	×	×	○	○	○	×	○	○	○	○	○	○	○	○	○	○	○	×	×	○	×
	P0120, P0121 TP sensor	×	○	○	×	○	×	○	○	○	○	○	○	○	○	×	○	○	○	○	○	○	○	○	○	○	○	○	○	○	○	○	×	×	○	×
	P0125 insufficient ECT for Closed Loop	×	○	○	○	×	×	○	○	○	○	○	○	○	○	×	×	○	○	×	○	○	○	○	○	○	○	○	○	○	○	○	×	×	○	×
	P0128 Thermostat	○	○	○	○	○	○	○	○	○	○	○	○	○	○	○	○	○	○	○	○	○	○	○	○	○	○	○	○	○	○	○	○	○	○	○
	P0130–P0153 Fr O2S	○	○	○	○	○	×	○	○	○	○	○	○	○	○	×	○	○	○	○	○	○	○	○	○	○	○	○	○	○	○	○	N	N	○	N
	P0134, P0154 Fr O2S, A/F sensor (No Activity)	×	○	○	○	○	×	○	○	○	○	○	○	○	○	×	○	○	○	○	○	○	○	○	○	○	○	○	○	○	○	○	×	×	○	×
	P0135, P0155 A/F sensor heater	○	○	○	○	○	×	○	○	○	○	○	○	○	○	○	○	○	○	○	○	○	○	○	○	○	○	○	○	○	○	○	×	×	○	×
	P0136, P0156 Rr O2S	○	○	○	○	○	○	○	○	○	○	○	○	○	○	○	○	○	○	○	○	○	○	○	○	○	○	○	○	○	○	○	×	○	○	○
	P0141–P0167 Rr O2S heater	○	○	○	○	○	○	○	○	○	○	○	○	○	○	○	○	○	○	○	○	○	○	○	○	○	○	○	○	○	○	○	×	○	○	○
	P0171, P0172 Fuel system	×	○	○	○	○	×	○	○	○	○	○	○	○	○	×	○	○	○	○	○	○	○	○	○	○	○	○	○	○	○	○	×	×	○	×
	P0174, P0175 Fuel system	×	○	○	○	○	×	○	○	○	○	○	○	○	○	×	○	○	○	○	○	○	○	○	○	○	○	○	○	○	○	○	×	×	○	×
	P0300–P0308 Misfire	×	○	○	○	○	×	○	○	○	○	○	○	○	○	×	○	○	○	○	○	○	○	○	○	○	○	○	○	○	○	○	×	×	○	×
	P0325, P0330 Knock sensor	○	○	○	○	○	○	○	○	○	○	○	○	○	○	×	○	○	○	○	○	○	○	○	○	○	○	○	○	○	○	○	○	○	○	○
	P0335 CKP sensor	×	○	○	○	○	×	○	○	○	○	○	○	○	○	×	○	○	○	×	○	○	○	○	○	○	○	○	○	○	○	○	×	×	○	×
	P0340, P0341 CMP sensor	×	○	○	○	○	×	○	○	○	○	○	○	○	○	×	○	○	○	×	○	○	○	○	○	○	○	○	○	○	○	○	×	×	○	×
	P0340–P0346 VVT sensor 1, 2	○	○	○	○	○	○	○	○	○	○	○	○	○	○	○	○	○	○	○	○	○	○	○	○	○	○	○	○	○	○	○	○	○	○	○
	P0351–P0358 Ignitor	×	○	○	○	○	×	○	○	○	○	○	○	○	○	×	○	○	○	○	○	○	○	○	○	○	○	○	○	○	○	○	○	○	○	○
	P0385 CKP sensor 2	×	○	○	○	○	×	○	○	○	○	○	○	○	○	○	○	○	○	×	○	○	○	○	○	○	○	○	○	○	○	○	×	×	○	×
	P0401 EGR system (closed)	○	○	○	○	○	○	○	○	○	○	○	○	○	○	×	○	○	○	○	○	○	○	○	○	○	○	○	○	○	○	○	○	○	○	○
	P0402 EGR system (open)	×	○	○	○	○	×	○	○	○	○	○	○	○	○	×	○	○	○	○	○	○	○	○	○	○	○	○	○	○	○	○	×	×	○	×
	P0405, P0409 Lift sensor	○	○	○	○	○	○	○	○	○	○	○	○	○	○	○	○	○	○	○	○	○	○	○	○	○	○	○	○	○	○	○	○	○	○	○
	P0420, P0430 Catelyst	○	○	○	○	○	○	○	○	○	○	○	○	○	○	○	○	○	○	○	○	○	○	○	○	○	○	○	○	○	○	○	○	○	○	○
	P0442–P0456 EVAP system	▨	○	○	○	○	×	○	○	○	○	○	○	○	○	○	○	○	○	○	○	○	○	○	○	○	○	○	○	○	○	○	×	×	○	×
	P0450, P0451 EVAP press sensor	×	▨	○	○	○	○	○	○	○	○	○	○	○	○	○	○	○	○	○	○	○	○	○	○	○	○	○	○	○	○	○	○	○	○	○
	P0500 VSS	×	○	▨	▨	▨	×	○	○	○	○	○	×	×	○	×	×	○	○	○	○	○	○	○	○	○	○	○	○	○	○	○	×	×	○	×
	P0505, P0511 IAC valve	○	○	○	○	○	▨	○	○	○	○	○	○	○	○	○	○	○	○	○	○	○	○	○	○	○	○	○	○	○	○	○	×	×	○	×
	P0510 Idle switch	×	○	○	○	○	×	▨	○	○	○	○	○	○	○	○	×	○	○	○	○	○	○	○	○	○	○	○	○	○	○	○	×	×	○	×
	P0560 Battery	○	○	○	○	○	○	○	▨	○	○	○	○	○	○	○	○	○	○	○	○	○	○	○	○	○	○	○	○	○	○	○	○	○	○	○
	P0617 Starter signal	○	○	○	○	○	○	○	○	▨	○	○	○	○	○	○	○	○	○	○	○	○	○	○	○	○	○	○	○	○	○	○	○	○	○	○
	P0705 Shift lever position switch	○	○	○	○	○	○	○	○	○	▨	○	○	○	○	○	○	○	○	○	○	○	○	○	○	○	○	○	○	○	○	○	○	○	○	○
	P0710 Trans fluid temp sensor	○	○	○	○	○	○	○	○	○	○	▨	○	○	○	○	○	○	○	○	○	○	○	○	○	○	○	○	○	○	○	○	○	○	○	○
	P0715–P0717 Output speed sensor	○	○	○	○	○	○	○	○	○	○	○	▨	○	○	×	○	○	○	○	○	○	○	○	○	○	○	○	○	○	○	○	○	○	○	○
	P0715–P0717 Input speed sensor	○	○	○	○	○	○	○	○	○	○	○	○	▨	○	○	○	○	○	○	○	○	○	○	○	○	○	○	○	○	○	○	○	○	○	○
	P0724 Stop lamp switch	○	○	○	○	○	○	○	○	○	○	○	○	○	▨	○	○	○	○	○	○	○	○	○	○	○	○	○	○	○	○	○	○	○	○	○
	P0741–P0796 Trans solenoid (function)	○	○	○	○	○	○	○	○	○	○	○	○	○	○	▨	▨	○	○	○	○	○	○	○	○	○	○	○	○	○	○	○	○	○	○	○
	P0748–P0798 Trans solenoid (range)	○	○	○	○	○	○	○	○	○	○	○	○	○	○	▨	▨	▨	○	○	○	○	○	○	○	○	○	○	○	○	○	○	○	○	○	○
	P0850 PNP switch	○	○	○	○	○	×	○	○	○	○	○	○	○	○	×	○	○	▨	○	○	○	○	○	○	○	○	○	○	○	○	○	○	○	○	○
	P1010, P1020 VVTL	○	○	○	○	○	○	○	○	○	○	○	○	○	○	○	○	○	○	▨	○	○	○	○	○	○	○	○	○	○	○	○	○	○	○	○
	P1100 BARO sensor	○	○	○	○	○	○	○	○	○	○	○	○	○	○	×	○	○	○	○	▨	○	○	○	○	○	○	○	○	○	○	○	×	×	○	×
	P1120, P1121 Accel position sensor	○	○	○	○	○	○	○	○	○	○	○	○	○	○	○	○	○	○	○	○	▨	○	○	○	○	○	○	○	○	○	○	○	○	○	○
	P1125, P1128 Throttle motor	○	○	○	○	○	○	○	○	○	○	○	○	○	○	○	○	○	○	○	○	○	▨	○	○	○	○	○	○	○	○	○	○	○	○	○
	P1126 Electronic magnet clutch	○	○	○	○	○	○	○	○	○	○	○	○	○	○	○	○	○	○	○	○	○	○	▨	○	○	○	○	○	○	○	○	○	○	○	○
	P1129 Electronic throttle system	○	○	○	○	○	○	○	○	○	○	○	○	○	○	○	○	○	○	○	○	○	○	○	▨	○	○	○	○	○	○	○	○	○	○	○
	P1400, P1401 Sub–TP sensor	○	○	○	○	○	○	○	○	○	○	○	○	○	○	○	○	○	○	○	○	○	○	○	○	▨	○	○	○	○	○	○	×	×	○	×
	P1405, P1406 Turbo press sensor	○	○	○	○	○	○	○	○	○	○	○	○	○	○	○	○	○	○	○	○	○	○	○	○	○	▨	○	○	○	○	○	○	○	○	○
	P1430 HC adsorber ACT press sensor	×	×	○	○	○	○	○	○	○	○	○	○	○	○	○	○	○	○	○	○	○	○	○	○	○	○	▨	○	○	○	○	○	○	○	○
	P1511, P1512 Turbo VSV	○	○	○	○	○	○	○	○	○	○	○	○	○	○	○	○	○	○	○	○	○	○	○	○	○	○	○	▨	○	○	○	○	○	○	○
	P1605 Knock control module	○	○	○	○	○	○	○	○	○	○	○	○	○	○	×	○	○	○	○	○	○	○	○	○	○	○	○	○	▨	○	○	○	○	○	○
	P1652–P1662 Turbo VSV 1 – 4	○	○	○	○	○	○	○	○	○	○	○	○	○	○	○	○	○	○	○	○	○	○	○	○	○	○	○	○	○	▨	○	○	○	○	○
	P2196, P2198 A/F sensor (rationality)	○	○	○	○	○	×	○	○	○	○	○	○	○	○	×	○	○	○	○	○	○	○	○	○	○	○	○	○	○	○	▨	○	○	○	×
	P2237, P2240 A/F sensor (open)	○	○	○	○	○	×	○	○	○	○	○	○	○	○	×	○	○	○	○	○	○	○	○	○	○	○	○	○	○	○	○	▨	○	○	×
	P2714–P2759 Trans solenoid (SLU–SLD)	○	○	○	○	○	○	○	○	○	○	○	○	○	○	×	○	○	○	○	○	○	○	○	○	○	○	○	○	○	○	○	○	▨	○	○
	P2A00, P2A03 A/F sensor (slow response)	○	○	○	○	○	×	○	○	○	○	○	○	○	○	×	○	○	○	○	○	○	○	○	○	○	○	○	○	○	○	○	○	○	▨	○

G26589

MIL CIRCUIT

CIRCUIT DESCRIPTION

The ignition switch provides circuit power and the ECM provides the circuit ground that illuminates the MIL. MIL operation is checked visually:

It should be illuminated when the ignition is first turned on. If the MIL is off all of the time or on all of the time, use the procedure below to troubleshoot it. The MIL is used to indicate the ECM's detection of a vehicle malfunction. Follow this procedure using the hand–held tester or an OBD II scan tool to determine the cause of the problem and to check the MIL.

WIRING DIAGRAM

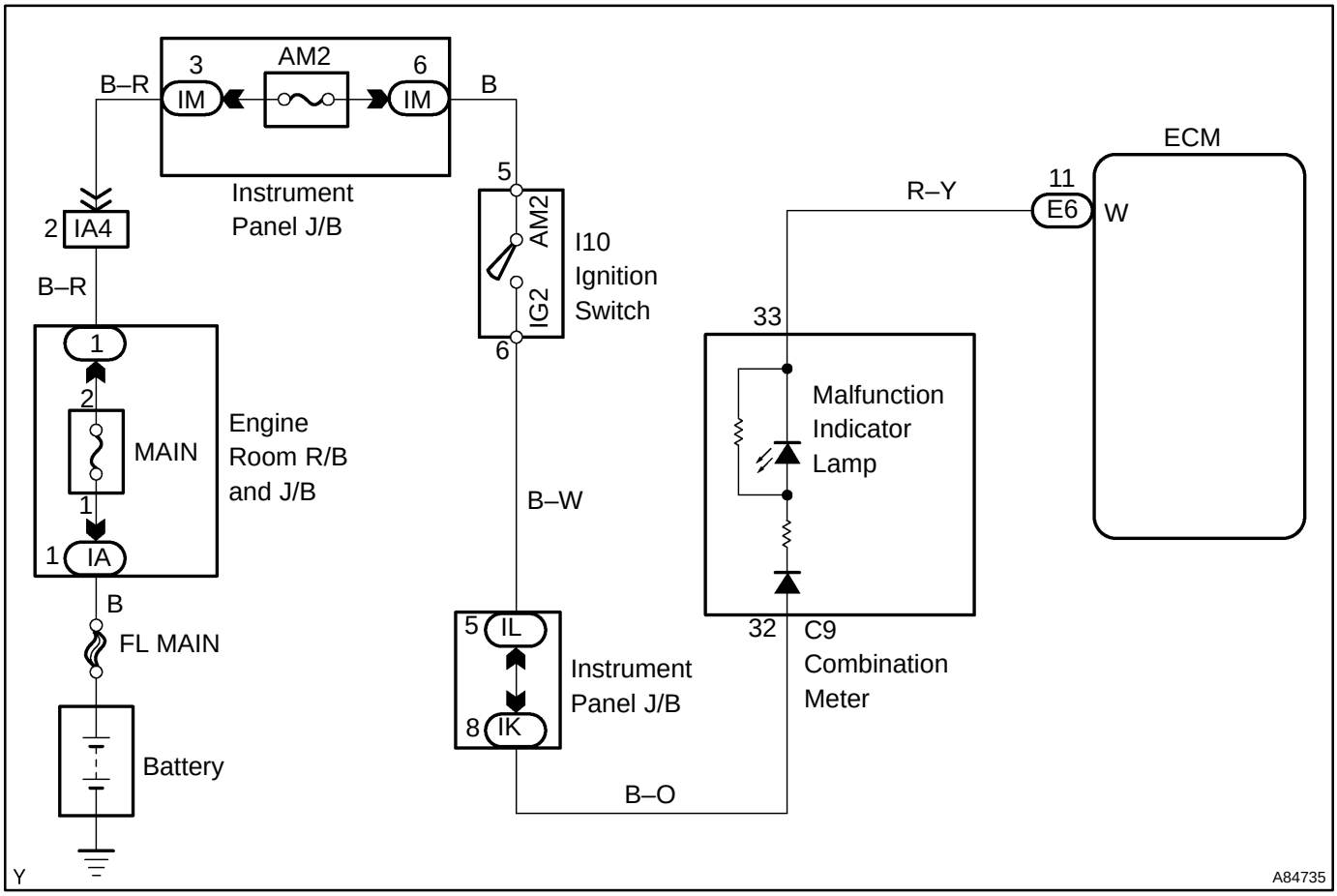

INSPECTION PROCEDURE

HINT:

Troubleshoot each trouble symptom in accordance with the chart below.

MIL remains on	Start inspection from step 1
MIL is not illuminated	Start inspection from step 3

1	CLEAR DTC

(a) Connect the hand–held tester or the OBD II scan tool to the DLC 3.
(b) Turn the ignition switch ON and push the hand–held tester or the OBD II scan tool main switch ON.
(c) Read the DTC (See page 05–9).
(d) Clear the DTC (See page 05–9).
(e) Check that MIL is not illuminated.
Standard: MIL is not illuminated

OK	REPAIR CIRCUIT INDICATED BY OUTPUT CODE (See page 05–35)

NG

2	CHECK HARNESS AND CONNECTOR(CHECK FOR SHORT IN WIRE HARNESS)

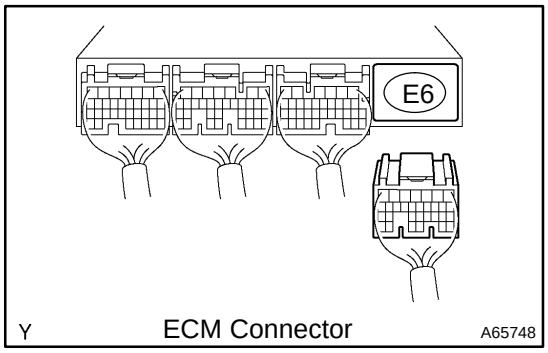

(a) Disconnect the E6 ECM connector.
(b) Turn the ignition switch ON.
(c) Check that MIL is not illuminated.
Standard: MIL is not illuminated
(d) Reconnect the ECM connector.

OK	REPLACE ECM (See page 10–11)

NG

CHECK AND REPAIR HARNESS AND CONNECTOR (COMBINATION METER – ECM)

3	CHECK THAT MIL IS ILLUMINATED

(a) Check that MIL is illuminated when turning the ignition switch ON.
Standard: MIL is illuminated

OK	SYSTEM OK

NG

4	INSPECT COMBINATION METER ASSY (MIL CIRCUIT)

(a) See the combination meter troubleshooting on page (See page 05–638).

NG	REPAIR OR REPLACE BULB OR COMBINATION METER ASSEMBLY

OK

CHECK AND REPAIR HARNESS AND CONNECTOR (COMBINATION METER – ECM)

05285–11

LOCATION

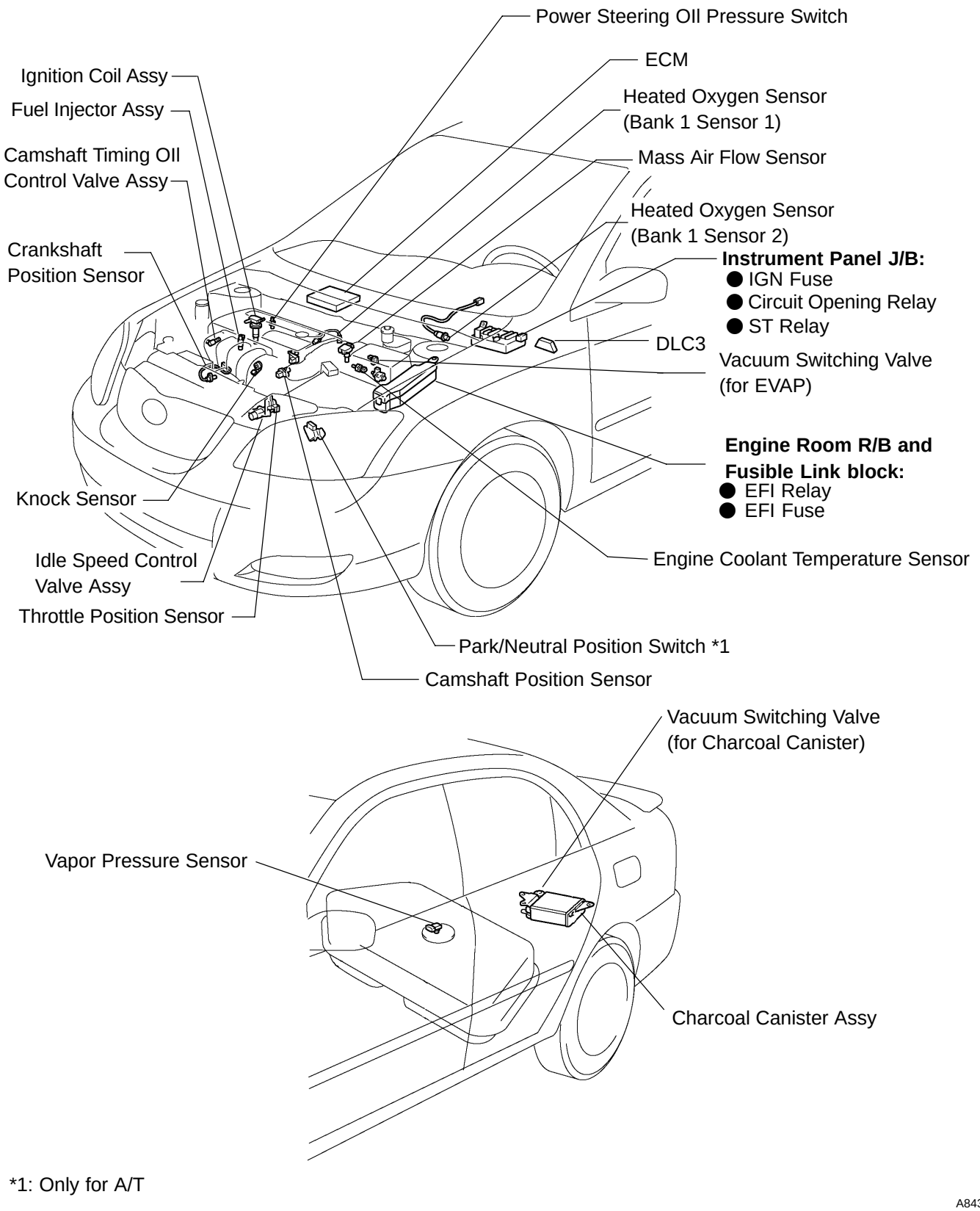

*1: Only for A/T

A84398

05DIE–01

TOYOTA/LEXUS PART AND SYSTEM NAME LIST

This reference list indicates the part names used in this manual along with their definitions.

TOYOTA/LEXUS name	Definition
Toyota HCAC system, Hydro–carbon Adsorptive Catalyst (HCAC) system, HC adsorptive three–way catalyst	HC adsorptive three–way catalytic converter
Variable Valve Timing sensor, VVT sensor	Camshaft position sensor
Variable valve timing system, VVT system	Camshaft timing control system
Camshaft timing oil control valve, Oil control valve, OCV, VVT, VSV	Camshaft timing oil control valve
Variable timing and lift	Camshaft timing and lift control
Crankshaft position sensor ”A”	Crankshaft position sensor
Engine speed sensor	Crankshaft position sensor
THA	Intake air temperature
Knock control module	Engine knock control module
Knock sensor	Engine knock sensor
Mass or volume air flow circuit	Mass air flow sensor circuit
Vacuum sensor	Manifold air pressure sensor
Internal control module, Control module, Engine control ECM, PCM	Power train control module
FC idle	Deceleration fuel cut
Idle air control valve	Idle speed control
VSV for CCV, Canister close valve, VSV for canister control	Evaporative emissions canister vent valve
VSV for EVAP, Vacuum switching valve assembly No. 1, EVAP VSV, Purge VSV	Evaporative emissions canister purge valve
VSV for pressure switching valve, Bypass VSV	Evaporative emission pressure switching valve
Vapor pressure sensor, EVAP pressure sensor, Evaporative emission control system pressure sensor	Fuel tank pressure sensor
Charcoal canister	Evaporative emissions canister
ORVR system	On–boad refueling vapor recovery system
Intake manifold runner control	Intake manifold tuning system
Intake manifold runner valve, IMRV, IACV (runner valve)	Intake manifold tuning valve
Intake control VSV	Intake manifold tuning solenoid valve
AFS	Air fuel ratio sensor
O2 sensor	Heated oxygen sensor
Oxygen sensor pumping current circuit	Oxygen sensor output signal
Oxygen sensor reference ground circuit	Oxygen sensor signal ground
Accel position sensor	Accelerator pedal position sensor
Throttle actuator control motor, Actuator control motor, Electronic throttle motor, Throttle control motor	Electronic throttle actuator
Electronic throttle control system, Throttle actuator control system	Electronic throttle control system
Throttle/pedal position sensor, Throttle/pedal position switch, Throttle position sensor/switch	Throttle position sensor
Turbo press sensor	Turbocharger pressure sensor
Turbo VSV	Turbocharger pressure control solenoid valve
P/S pressure switch	Power–steering pressure switch
VSV for ACM	Active control engine mount
Speed sensor, Vehicle speed sensor ”A”, Speed sensor for skid control ECU	Vehicle speed sensor
ATF temperature sensor, Trans. fluid temp. sensor, ATF temperature sensor ”A”	Transmission fluid temperature sensor
Electronic controlled automatic transmission, ECT	Electronically controlled automatic
Intermediate shaft speed sensor ”A”	Counter gear speed sensor

TOYOTA/LEXUS name	Definition
Output speed sensor	Output shaft speed sensor
Input speed sensor, Input turbine speed sensor ”A”, Speed sensor (NT), Turbine speed sensor	Input turbine speed sensor
PNP switch, NSW	Park/neutral position switch
Pressure control solenoid	Transmission pressure control solenoid
Shift solenoid	Transmission shift solenoid valve
Transmission control switch, Shift lock control unit	Shift lock control module
Engine immobiliser system, Immobiliser system	Vehicle anti–theft system

DTC	P0010	CAMSHAFT POSITION ”A” ACTUATOR CIRCUIT (BANK 1)

CIRCUIT DESCRIPTION

The Variable Valve Timing (VVT) system includes the ECM, the Oil Control Valve (OCV) and the VVT controller. The ECM sends a target ”duty–cycle” control signal to the OCV. This control signal, applied to the OCV, regulates the oil pressure supplied to the VVT controller. Camshaft timing control is performed based on engine operation conditions such as the intake air volume, throttle position and engine coolant temperature. The ECM controls the OCV, based on the signals output from the sensors. The VVT controller regulates the intake camshaft angle using oil pressure through the OCV. As result, the relative position between the camshaft and the crankshaft is optimized, and the engine torque improves, fuel economy improves, and exhaust emissions decrease under overall driving conditions. Also, the ECM detects the actual valve timing using signals from the camshaft position sensor and the crankshaft position sensor, and performs the feedback control. This is how target valve timing is verified by the ECM.

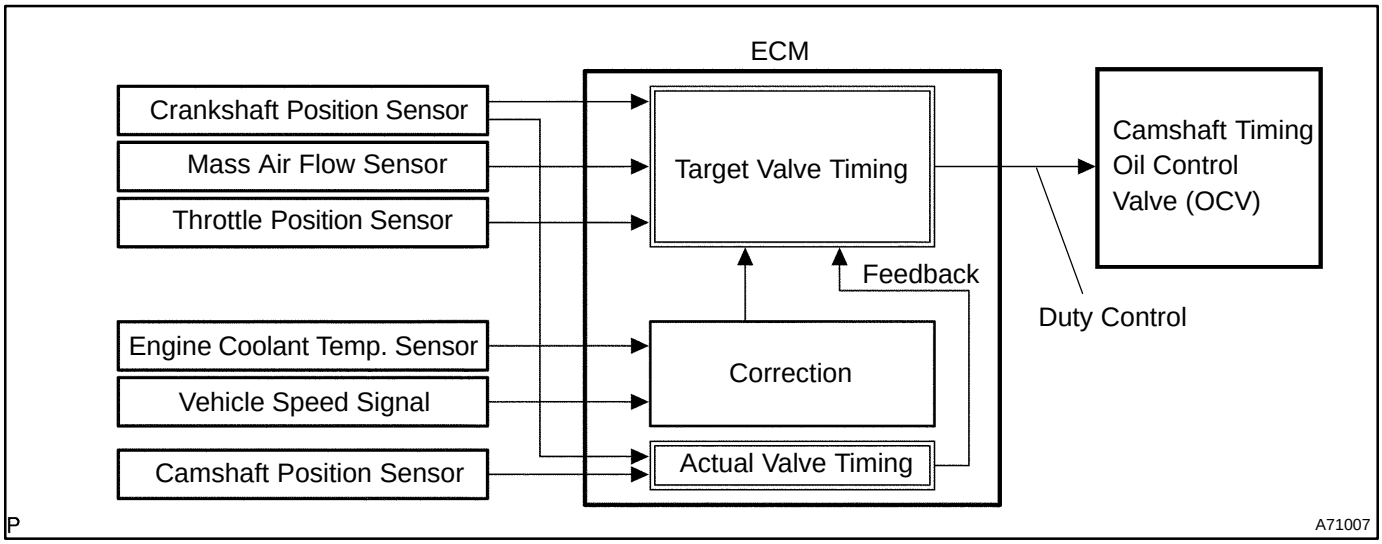

DTC No.	DTC Detection Condition	Trouble Area
P0010	Open or short in oil control valve circuit	• Open or short in oil control valve circuit • Oil control valve • ECM

MONITOR DESCRIPTION

After the ECM sends the ”target” duty–cycle signal to the OCV, the ECM monitors the OCV current to establish an ”actual” duty–cycle. The ECM detects a malfunction and sets a DTC when the actual duty–cycle ratio varies from the target duty–cycle ratio.

MONITOR STRATEGY

Related DTCs	P0010	VVT oil control valve bank 1 range check
Required sensors/components	OCV	
Frequency of operation	Continuous	
Duration	1 seconds	
MIL operation	Immediately	
Sequence of operation	None	

TYPICAL ENABLING CONDITIONS

Item	Specification	
	Minimum	Maximum
The monitor will run whenever the following DTCs are not present	See ”List of Disable a Monitor” (On page 05–25)	
Battery voltage	11 V	13 V
Target duty ratio	–	70 %
Starter	OFF	
Current cut status	Not cut	

TYPICAL MALFUNCTION THRESHOLDS

Detection Criteria	Threshold
One of the following condition is met:	(a) or (b)
(a) Output signal duty for OCV	Output duty ratio is 100 % (always ON) despite the target duty ratio is less than 70 %
(b) Output signal duty for OCV	Output duty is 3 % or less despite the ECM supplying the current to the OCV

COMPONENT OPERATING RANGE

Parameter	Standard Value
Output signal duty for OCV	Between 3 % and 100 %

WIRING DIAGRAM

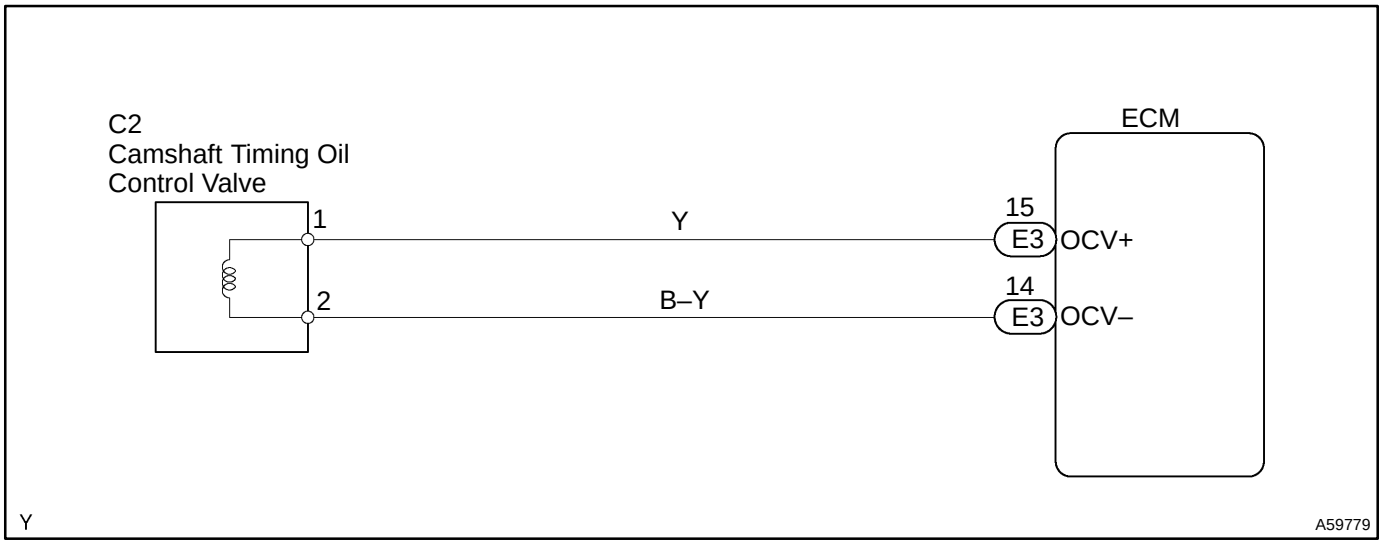

INSPECTION PROCEDURE

HINT:

Read freeze frame data using the hand–held tester or the OBD II scan tool. Freeze frame data records the engine conditions when a malfunction is detected. When troubleshooting, it is useful for determining whether the vehicle was running or stopped, the engine was warmed up or not, the air–fuel ratio was lean or rich, etc. at the time of the malfunction.

Hand–held tester:

1	**PERFORM ACTIVE TEST BY HAND–HELD TESTER(OPERATE OCV)**

(a) Connect the hand–held tester to the DLC3.
(b) Start the engine and warm it up.
(c) Turn the ignition switch ON and push the hand–held tester main switch ON.
(d) Select the item ”DIAGNOSIS / ENHANCED OBD II / ACTIVE TEST / VVT CTRL B1”.
(e) Check the engine speed when operating the Oil control valve (OCV) by the hand–held tester.
Standard:

Tester Operation	Specified Condition
OCV is OFF	Normal engine speed
OCV is ON	Rough idle or engine stall

OK → **CHECK FOR INTERMITTENT PROBLEMS (See page 05–41)**

NG

2	**INSPECT CAMSHAFT TIMING OIL CONTROL VALVE ASSY(OCV) (See page 10–2)**

NG → **REPLACE CAMSHAFT TIMING OIL CONTROL VALVE ASSY**

OK

3 INSPECT ECM(OCV SIGNAL)

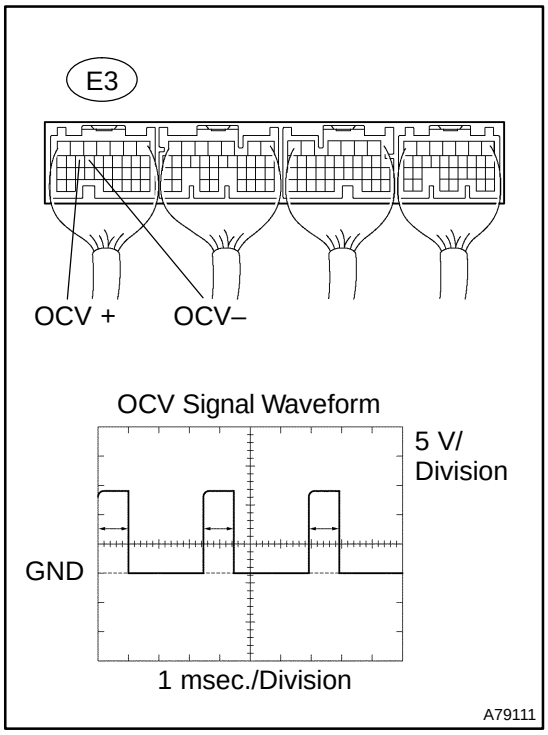

(a) Inspection using the oscilloscope.
(b) During idling, check the waveform between the terminals of the E3 ECM connector.

Standard:

Tester Connection	Specified Condition
OCV+ (E3–15) – OCV– (E3–14)	Correct waveform is as shown

NG → **REPLACE ECM (See page 10–11)**

OK

4 CHECK HARNESS AND CONNECTOR(CAMSHAFT TIMING OIL CONTROL VALVE (OCV) – ECM)

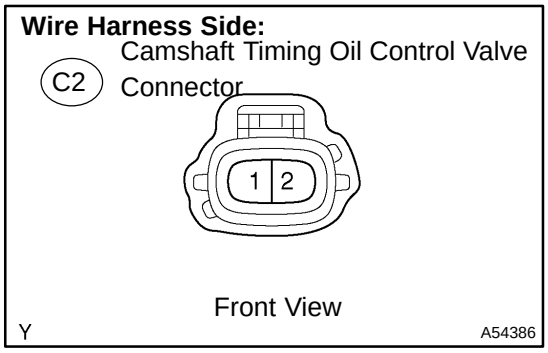

(a) Disconnect the C2 camshaft timing oil control valve connector.
(b) Disconnect the E3 ECM connector.
(c) Check the resistance between the wire harness side connectors.

Standard (Check for open):

Tester Connection	Specified Condition
Oil control valve (C2–1) – OCV+ (E3–15)	Below 1 Ω
Oil control valve (C2–2) – OCV– (E3–14)	

Standard (Check for short):

Tester Connection	Specified Condition
Oil control valve (C2–1) or OCV+ (E3–15) – Body ground	10 kΩ or higher
Oil control valve (C2–2) or OCV– (E3–14) – Body ground	

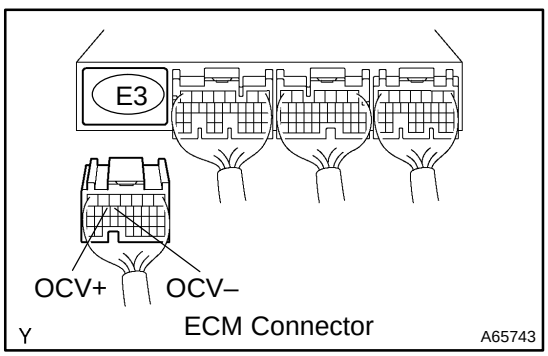

(d) Reconnect the camshaft timing oil control valve connector.
(e) Reconnect the ECM connector.

NG → **REPAIR OR REPLACE HARNESS OR CONNECTOR**

OK

CHECK FOR INTERMITTENT PROBLEMS (See page 05–41)

OBDII scan tool (excluding hand–held tester):

1	INSPECT CAMSHAFT TIMING OIL CONTROL VALVE ASSY(OPERATE OCV)

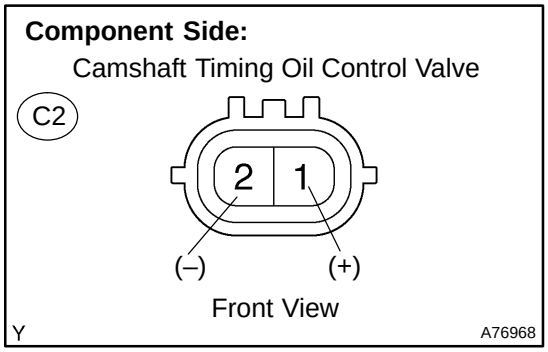

(a) Disconnect the C2 camshaft timing oil control valve connector.
(b) Apply positive battery voltage between the terminals of the camshaft timing oil control valve.
(c) Check the engine speed.
Standard:
Engine speed is rough idle or engine is stalled.
(d) Reconnect the camshaft timing oil control valve connector.

NG → **REPLACE CAMSHAFT TIMING OIL CONTROL VALVE ASSY**

OK

2	INSPECT ECM(OCV SIGNAL)

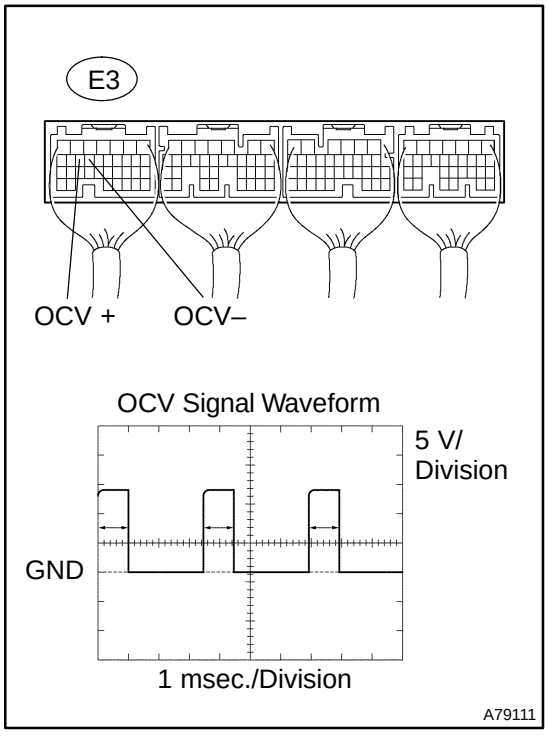

(a) Inspection using the oscilloscope.
(b) During idling, check the waveform between the terminals of the E3 ECM connector.
Standard:

Tester Connection	Specified Condition
OCV+ (E3–15) – OCV– (E3–14)	Correct waveform is as shown

NG → **REPLACE ECM (See page 10–11)**

OK

3	CHECK HARNESS AND CONNECTOR(CAMSHAFT TIMING OIL CONTROL VALVE (OCV) – ECM)

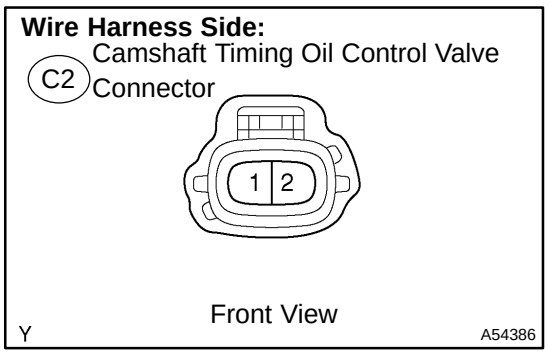

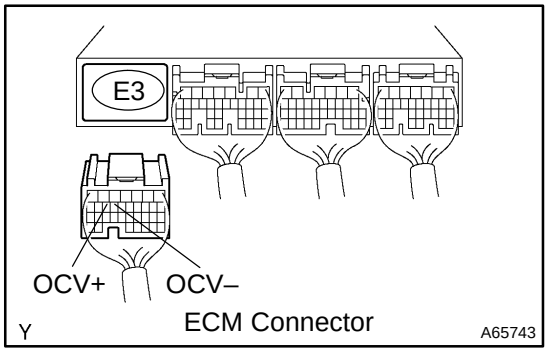

(a) Disconnect the C2 camshaft timing oil control valve connector.

(b) Disconnect the E3 ECM connector.

(c) Check the resistance between the wire harness side connectors.

Standard (Check for open):

Tester Connection	Specified Condition
Oil control valve (C2–1) – OCV+ (E3–15)	Below 1 Ω
Oil control valve (C2–2) – OCV– (E3–14)	

Standard (Check for short):

Tester Connection	Specified Condition
Oil control valve (C2–1) or OCV+ (E3–15) – Body ground	10 kΩ or higher
Oil control valve (C2–2) or OCV– (E3–14) – Body ground	

(d) Reconnect the camshaft timing oil control valve connector.

(e) Reconnect the ECM connector.

NG → **REPAIR OR REPLACE HARNESS OR CONNECTOR**

OK

CHECK FOR INTERMITTENT PROBLEMS (See page 05–41)

DTC	P0011	CAMSHAFT POSITION ”A” –TIMING OVER–ADVANCED OR SYSTEM PERFORMANCE (BANK 1)

DTC	P0012	CAMSHAFT POSITION ”A” –TIMING OVER–RETARDED (BANK 1)

CIRCUIT DESCRIPTION

Refer to DTC P0010 on page 05–44.

DTC No.	DTC Detection Condition	Trouble Area
P0011	Condition (a) or (b) continues after engine is warmed up and engine speed at 550 to 4,000 rpm (Problem of the advanced OCV): (a) Valve timing does not change from current valve timing (b) Current valve timing is fixed	• Valve timing • Oil control valve • Camshaft timing gear assy • ECM
P0012	Condition (a) or (b) continues after engine is warmed up and engine speed at 550 to 4,000 rpm (Problem of the retarded OCV): (a) Valve timing does not change from current valve timing (b) Current valve timing is fixed	

MONITOR DESCRIPTION

The ECM optimizes the valve timing using the Variable Valve Timing (VVT) system to control the intake valve camshaft. The VVT system includes the ECM, the Oil Control Valve (OCV) and the VVT controller. The ECM sends a target ”duty–cycle” control signal to the OCV. This control signal, applied to the OCV, regulates the oil pressure supplied to the VVT controller. The VVT controller can advance or retard the intake valve camshaft.

Example:

When a difference between the targeted and actual valve timing is more than 5° camshaft angle ”CA” and this condition continues for more than 4.5 sec, and if the OCV is forcibly activated 63 times or more.

Advanced cam DTCs are subject to ”1 trip” detection logic.

Retarded cam DTCs are subject to ”2 trip” detection logic.

MONITOR STRATEGY

Related DTCs	P0011	VVT system advance (bank 1)
	P0012	VVT system retard (bank 1)
Required sensors/components	Main sensors	Camshaft position sensor
	Related sensors	Engine coolant temperature sensor, crankshaft position sensor
Frequency of operation	Once per drive cycles	
Duration	10 sec	
MIL operation	P0011: Immediately P0012: 2 driving cycles	
Sequence of operation	None	

TYPICAL ENABLING CONDITIONS

Item	Specification	
	Minimum	Maximum
The monitor will run whenever the following DTCs are not present	See "List of Disable a Monitor" (On page 05–25)	
Battery voltage	11 V	–
Engine speed	550 rpm	4,000 rpm
Engine coolant temperature	75°C (167°F)	100°C (212°F)

TYPICAL MALFUNCTION THRESHOLDS

Detection Criteria	Threshold
Duration time of the following conditions (a) and (b) are met:	4.5 seconds or more
(a) Following conditions are met:	1 and 2
1. VVT control status	Feedback
2. Deviation of valve timing (Difference between targeted and actual valve timing)	More than 5°CA
(b) Following conditions is met:	
Response of valve timing	1 sec/°CA or more

WIRING DIAGRAM

Refer to DTC P0010 on page 05–44.

INSPECTION PROCEDURE

HINT:

Advanced timing over (Valve timing is out of specified range)	P0011
Retarded timing over (Valve timing is out of specified range)	P0012

- If DTC P0011 or P0012 is displayed, check the VVT system circuit.
- Read freeze frame data using the hand–held tester or the OBD II scan tool. Freeze frame data records the engine conditions when a malfunction is detected. When troubleshooting, it is useful for determining whether the vehicle was running or stopped, the engine was warmed up or not, the air–fuel ratio was lean or rich, etc. at the time of the malfunction.

Hand–held tester:

1	**CHECK VALVE TIMING(CHECK FOR LOOSE AND JUMPED TOOTH OF TIMING CHAIN) (See page 14–82)**

NG → **ADJUST VALVE TIMING (See page 14–82)**

OK

2	PERFORM ACTIVE TEST BY HAND–HELD TESTER(OPERATE OCV)

(a) Connect the hand–held tester to the DLC3.
(b) Start the engine and warm it up.
(c) Turn the ignition switch ON and push the hand–held tester main switch ON.
(d) Select the item ”DIAGNOSIS / ENHANCED OBD II / ACTIVE TEST / VVT CTRL B1”.
(e) Check the engine speed when operating the OCV by the hand–held tester.
Standard:

Tester Operation	Specified Condition
OCV is OFF	Normal engine speed
OCV is ON	Rough idle or engine stall

NG → **Go to step 4**

OK

3	CHECK IF DTC OUTPUTS REOCCUR

(a) Clear the DTCs.
(1) Operate the hand–held tester to erase the codes, or disconnect the battery terminal or remove the EFI fuse for more than 60 seconds.
(b) Start and warm up the engine.
(c) Drive the vehicle around for 10 minutes or more.
(d) Read output DTCs using the hand–held tester.
Standard: No DTC output.
HINT:
*: DTC P0011 or P0012 is output when a foreign object in engine oil is caught in some part of the system. These codes will stay registered even if the system returns to normal after a short time. These foreign objects are then captured by the oil filter, thus eliminating the source of the problem.
(e) Reconnect the battery terminal or install the EFI fuse.

OK → **VVT SYSTEM OK ***

NG

4	INSPECT ECM(OCV SIGNAL)

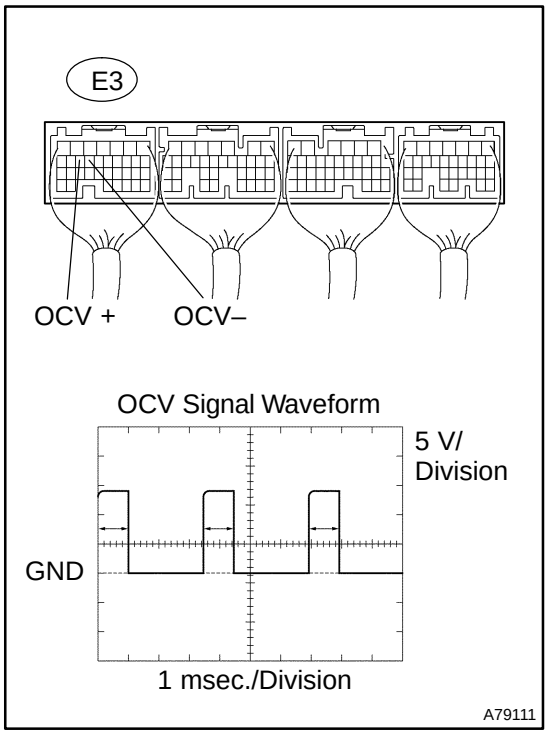

(a) Inspect using the oscilloscope.
(b) During idling, check the waveform between the terminals of the E3 ECM connector.

Standard:

Tester Connection	Specified Condition
OCV+ (E3–15) – OCV– (E3–14)	Correct waveform is as shown

NG → **REPLACE ECM (See page 10–11)**

OK

5	INSPECT OIL CONTROL VALVE FILTER

NG → **REPLACE OIL CONTROL VALVE FILTER**

OK

6	INSPECT CAMSHAFT TIMING OIL CONTROL VALVE ASSY(OCV) (See page 10–2)

OK → **Go to step 8**

NG

7	REPLACE CAMSHAFT TIMING OIL CONTROL VALVE ASSY(OCV)

GO

8	INSPECT CAMSHAFT TIMING GEAR ASSY (See page 14–96)

OK → **Go to step 10**

NG

9	REPLACE CAMSHAFT TIMING GEAR ASSY

GO

10	CHECK FOR BLOCKAGE(OCV, OIL CHECK VALVE AND OIL HOLE)

NG → REPAIR OR REPLACE

OK

11	CHECK IF DTC OUTPUTS REOCCUR

(a) Clear the DTCs.
  (1) Operate the hand–held tester to erase the codes, or disconnect the battery terminal or remove the EFI fuse for more than 60 seconds.
(b) Start and warm up the engine.
(c) Drive the vehicle around for 10 minutes or more.
(d) Read output DTC using the hand–held tester.

Standard: No DTC output.

HINT:

*: DTC P0011 or P0012 is output when a foreign object in engine oil is caught in some part of the system. These codes will stay registered even if the system returns to normal after a short time. These foreign objects are then captured by the oil filter, thus eliminating the source of the problem.

(e) Reconnect the battery terminal or install the EFI fuse.

OBDII scan tool (excluding hand–held tester):

OK → VVT SYSTEM OK *

NG

REPLACE ECM (See page 10–11)

1	CHECK VALVE TIMING(CHECK FOR LOOSE AND JUMPED TOOTH OF TIMING CHAIN) (See page 14–82)

NG → ADJUST VALVE TIMING (See page 14–82)

OK

2	CHECK OPERATION OF OCV

Component Side:

C2

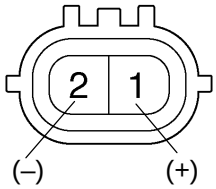

Camshaft Timing Oil Control Valve

Y A76968

(a) Start the engine.
(b) Check the engine speed at (1) and (2).
  (1) Disconnect the C2 camshaft timing oil control valve connector.
  (2) Apply battery positive voltage between the terminals of the camshaft timing oil control valve.

Result:

Proceed to	Check (1)	Check (2)
A	Normal engine speed	Rough idle or engine stall
B	Conditions other than A	

  (3) Reconnect the camshaft timing oil control valve connector.

B → **Go to step 4**

A

3	CHECK IF DTC OUTPUTS REOCCUR(CHECK IF DTC OUTPUT RECURS)

(a) Clear the DTCs.
  (1) Operating the OBD II scan tool to erase the codes, or disconnect the battery terminal or remove the EFI fuse for more than 60 seconds.
(b) Start and warm up the engine.
(c) Drive the vehicle around for 10 minutes or more.
(d) Read output DTCs using the OBD II scan tool.

Standard: No DTC output.

HINT:

*: DTC P0011 or P0012 is output when a foreign object in engine oil is caught in some part of the system. These codes will stay registered even if the system returns to normal after a short time. These foreign objects are then captured by the oil filter, thus eliminating the source of the problem.

OK → **VVT SYSTEM OK ***

NG

4	INSPECT ECM(OCV SIGNAL)

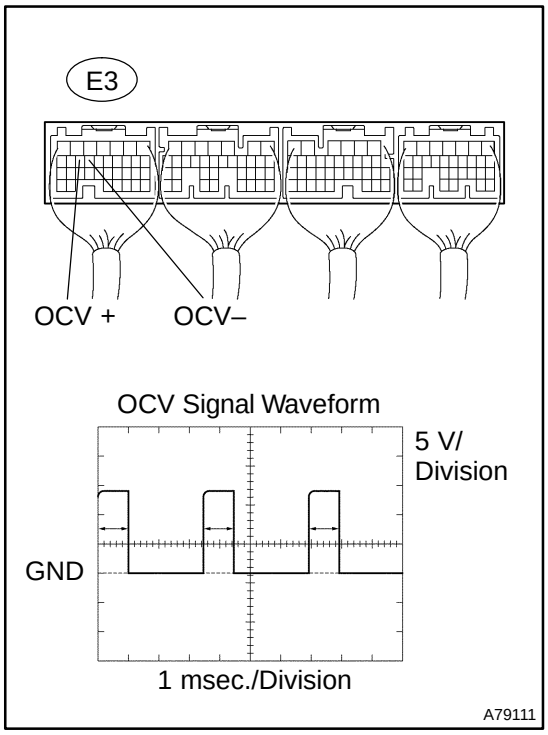

(a) Inspect using the oscilloscope.
(b) During idling, check the waveform between the terminals of the E3 ECM connector.

Standard:

Tester Connection	Specified Condition
OCV+ (E3–15) – OCV– (E3–14)	Correct waveform is as shown

NG → **REPLACE ECM (See page 10–11)**

OK

5	INSPECT OIL CONTROL VALVE FILTER

NG → **REPLACE OIL CONTROL VALVE FILTER**

OK

6	INSPECT CAMSHAFT TIMING OIL CONTROL VALVE ASSY(OCV) (See page 10–2)

OK → **Go to step 8**

NG

7	REPLACE CAMSHAFT TIMING OIL CONTROL VALVE ASSY(OCV)

GO

8	INSPECT CAMSHAFT TIMING GEAR ASSY (See page 14–96)

OK → **Go to step 10**

NG

9	REPLACE CAMSHAFT TIMING GEAR ASSY

GO

10	CHECK FOR BLOCKAGE(OCV, OIL CHECK VALVE AND OIL HOLE)

NG → REPAIR OR REPLACE

OK

11	CHECK IF DTC OUTPUTS REOCCUR

(a) Clear the DTCs.
  (1) Operate the OBD II scan tool to erase the codes, or disconnect the battery terminal or remove the EFI fuse for more than 60 seconds.
(b) Start and warm up the engine.
(c) Drive the vehicle around for 10 minutes or more.
(d) Read output DTCs using the OBD II scan tool.

Standard: No DTC output.

HINT:

*: DTC P0011 or P0012 is output when a foreign object in engine oil is caught in some part of the system. These codes will stay registered even if the system returns to normal after a short time. These foreign objects are then captured by the oil filter, thus eliminating the source of the problem.

(e) Reconnect the battery terminal or install the EFI fuse.

OK → VVT SYSTEM OK

NG

REPLACE ECM (See page 10–11)

DTC	P0016	CRANKSHAFT POSITION – CAMSHAFT POSITION CORRELATION (BANK 1 SENSOR A)

CIRCUIT DESCRIPTION

Refer to DTC P0335 on page 05–168.

DTC No.	DTC Detection Condition	Trouble Area
P0016	Deviation in crankshaft position sensor signal and camshaft position sensor signal (2 trip detection logic)	• Mechanical system (Timing chain has jumped a tooth, chain stretched) • ECM

MONITOR DESCRIPTION

The ECM optimizes the valve timing using the Variable Valve Timing (VVT) system to control the intake valve camshaft. The VVT system includes the ECM, the Oil Control Valve (OCV) and the VVT controller. The ECM sends a target ”duty–cycle” control signal to the OCV. This control signal, applied to the OCV, regulates the oil pressure supplied to the VVT controller. The VVT controller can advance or retard the intake valve camshaft. The ECM calibrates the valve timing of the VVT system by setting the camshaft to the maximum retard angle when the engine speed is idling. The ECM closes the OCV to retard the cam. The ECM stores this valve as ”VVT learned value” (When the difference between the target valve timing and the actual valve timing is 5 ° or less, the ECM learns it).

If the learned value meets both of the following conditions (”a” and ”b”), the ECM interprets this as a defect in the VVT system and set a DTC.

(a) ”VVT learning” value is less than 24°CA, or more than 46°CA.

(b) Above condition continues for more than 18 seconds.

MONITOR STRATEGY

Related DTCs	P0016	Deviation in crankshaft position sensor signal and camshaft position sensor signal (bank 1)
Required sensors/components	Crankshaft position sensor, camshaft position sensor	
Frequency of operation	Once per drive cycles	
Duration	60 seconds	
MIL operation	2 drive cycles	
Sequence of operation	None	

TYPICAL ENABLING CONDITIONS

Item	Specification	
	Minimum	Maximum
The monitor will run whenever the following DTCs are not present	See ”List of Disable a Monitor” (On page 05–25)	
VVT feedback mode	ON	
Engine speed	600 rpm	1,400 rpm

TYPICAL MALFUNCTION THRESHOLDS

Detection Criteria	Threshold
Either the following condition is met:	(a) or (b)
(a) ”VVT learned” value	Less than 24°CA
(b) ”VVT learned” value	More than 46°CA

WIRING DIAGRAM

Refer to DTC P0335 on page 05–168.

INSPECTION PROCEDURE

HINT:

Read freeze frame data using the hand–held tester or the OBD II scan tool. Freeze frame data records the engine conditions when a malfunction is detected. When troubleshooting, it is useful for determining whether the vehicle was running or stopped, the engine was warmed up or not, the air–fuel ratio was lean or rich, etc. at the time of the malfunction.

1	**CHECK VALVE TIMING(CHECK FOR LOOSE AND JUMPED TOOTH OF TIMING CHAIN) (See page 14–82)**

NG → **ADJUST VALVE TIMING (See page 14–82) (REPAIR OR REPLACE TIMING CHAIN)**

OK

REPLACE ECM (See page 10–11)

DTC	P0031	OXYGEN SENSOR HEATER CONTROL CIRCUIT LOW (BANK 1 SENSOR 1)

DTC	P0032	OXYGEN SENSOR HEATER CONTROL CIRCUIT HIGH (BANK 1 SENSOR 1)

DTC	P0037	OXYGEN SENSOR HEATER CONTROL CIRCUIT LOW (BANK 1 SENSOR 2)

DTC	P0038	OXYGEN SENSOR HEATER CONTROL CIRCUIT HIGH (BANK 1 SENSOR 2)

CIRCUIT DESCRIPTION

Refer to DTC P0130 on page 05–101.

HINT:

The ECM provides a pulse width modulated control circuit to adjust current through the heater. The heated oxygen sensor heater circuit uses a relay on the B+ side of the circuit.

Reference (Bank 1 Sensor 1 System Drawing):

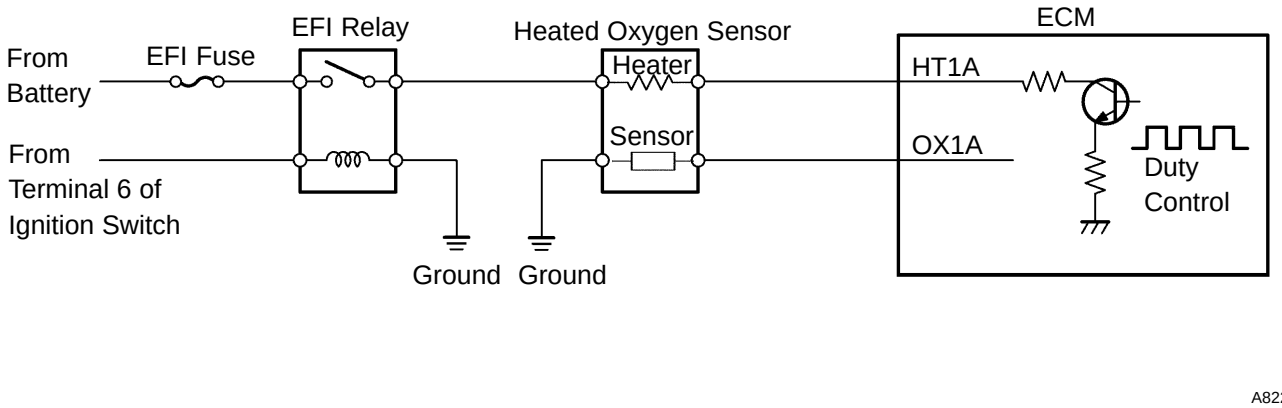

DTC No.	DTC Detection Condition	Trouble Area
P0031 P0037	Heated current is 0.25 A or less when heater operates with B+ greater than 11.5 V (1 trip detection logic)	• Open or short in heater circuit of heated oxygen sensor • Heated oxygen sensor heater • EFI relay • ECM
P0032 P0038	Heated current exceeds 3.5 A when heater operates (1 trip detection logic)	

MONITOR DESCRIPTION

The ECM uses the heated oxygen sensor information to regulate the air–fuel ratio close to a stoichiometric ratio. This maximizes the catalytic converter's ability to purify the exhaust gas. The sensor detects oxygen levels in the exhaust gas and sends this signal to the ECM.

The inner surface of the sensor element is exposed to the outside air. The outer surface of the sensor element is exposed to the exhaust gas. The sensor element is made of the platinum coated zirconia and includes an integrated heating element. The heated oxygen sensor has the characteristic whereby its output voltage change suddenly in the vicinity of the stoichiometric air–fuel ratio. When heated, the sensor becomes very efficient. If the temperature of the exhaust is low, the sensor will not generate useful voltage signals without supplemental heating. The ECM regulates the supplemental heating using a duty–cycle approach to regulate the average current in the heater element. If the heater current is out of the normal range, the sensor's output signals will be inaccurate and the ECM cannot regulate the air–fuel ratio properly. When the heater current is out of the normal operating range, the ECM interprets this as a malfunction and sets a DTC.

Example:

The ECM will set a high current DTC if the current in the sensor is more than 2 A when the heater is OFF. Similarly, the ECM will set a low current DTC if the current is less than 0.25 A when the heater is ON.

MONITOR STRATEGY

Related DTCs	P0031, P0037	Heated oxygen sensor heater current bank 1 sensor 1, sensor 2 (low current)
	P0032, P0038	Heated oxygen sensor heater current bank 1 sensor 1, sensor 2 (high current)
Required sensors/components	Main sensors	Heated oxygen sensor
	Related sensors	Vehicle speed sensor
Frequency of operation	Continuous	
Duration	0.3 seconds	
MIL operation	1 driving cycle	
Sequence of operation	None	

TYPICAL ENABLING CONDITIONS

Item	Specification	
	Minimum	Maximum
The monitor will run whenever the following DTCs are not present	See "List of Disable a Monitor" (On page 05–25)	
P0032, P0038 (High current):		
Intrusive heating is OFF		
P0031, P0037 (Low current):		
Either following condition is met:	A or B	
A. Following conditions are met:	1, 2, 3, 4 and 5	
1. Time after engine start	250 seconds	500 seconds
2. Battery voltage	10.5 V	16 V
3. Vehicle speed	–	56 mph (90 km/h)
4. Misfire	No detect	
5. Pass/Fail detection in this driving cycle	No detect	
B. Following conditions are met:	1, 2, 3, 4 and 5	
1. Time after engine start	500 seconds	–
2. Battery voltage	10.5 V	16 V
3. Vehicle speed	25 mph (40 km/h)	–
4. Misfire	None detected	
5. Pass/Fail detection in this driving cycle	Pass and fail detection has not occurred yet	

TYPICAL MALFUNCTION THRESHOLDS

Detection Criteria	Threshold
P0032, P0038 (High current):	
Heated oxygen sensor heater current	More than 2 A (while intrusive heating is off)
P0031, P0037 (Low current):	
Heated oxygen sensor heater current	Less than 0.25 A (at 0.3 seconds after heater "ON")

COMPONENT OPERATING RANGE

Parameter	Standard Value
Heated oxygen sensor heater current under the following conditions: • Idling • Heated oxygen sensor is warmed up • Battery voltage is 11 to 14 V	0.4 to 1.0 A

MONITOR RESULT (MODE 06 DATA)

Test ID	Comp ID	Description of Test Data	Description of Test Limit	Unit	Conversion Factor
$04	$81 to $82	Maximum heated oxygen sensor heater current	Maximum threshold heater current to detect heated oxygen sensor heater circuit malfunction	A	Multiply by 0.000076

Refer to page 05–27 for detailed information on Checking Monitor Status.

WIRING DIAGRAM

Refer to DTC P0130 on page 05–101.

INSPECTION PROCEDURE

HINT:

- If different DTCs related to different systems that have terminal E2 as the ground terminal are output simultaneously, terminal E2 may be open.
- Read freeze frame data using the hand–held tester or the OBD II scan tool. Freeze frame data records the engine conditions when a malfunction is detected. When troubleshooting, it is useful for determining whether the vehicle was running or stopped, the engine was warmed up or not, the air–fuel ratio was lean or rich, etc. at the time of the malfunction.

1 INSPECT HEATED OXYGEN SENSOR(HEATER RESISTANCE)

Component Side:

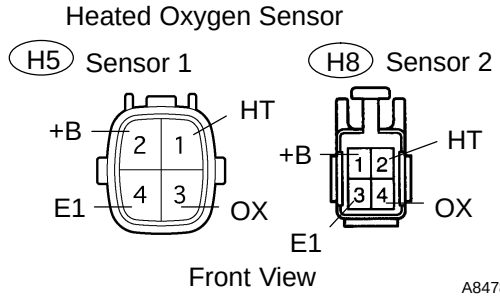

(a) Disconnect the H5 or H8 heated oxygen sensor connector.

(b) Measure the resistance between the terminals of the heated oxygen sensor connector.

Standard:

Tester Connection	Specified Condition
HT (H5–1) – +B (H5–2)	5 to 10 Ω at 20 °C (68 °F)
HT (H5–1) – E1 (H5–4)	10 kΩ or higher
HT (H8–2) – +B (H8–1)	5 to 10 Ω at 20 °C (68 °F)
HT (H8–2) – E1 (H8–3)	10 kΩ or higher

(c) Reconnect the heated oxygen sensor connector.

NG → **REPLACE HEATED OXYGEN SENSOR**

OK

2 INSPECT EFI RELAY

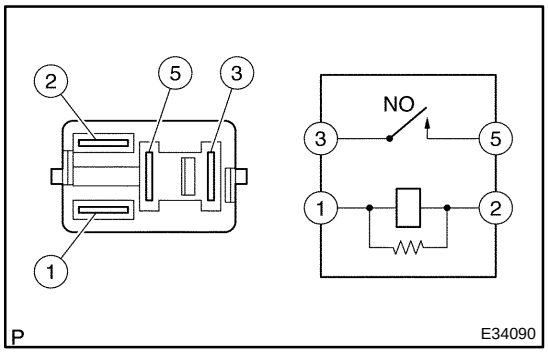

(a) Remove the EFI relay from the engine room R/B.
(b) Check for continuity in the EFI relay.
Standard:

Tester Connection	Specified Condition
1 – 2	Continuity
3 – 5	No continuity
	Continuity (Apply battery voltage to terminals 1 and 2)

(c) Reinstall the EFI relay.

NG → **REPLACE EFI RELAY**

OK

3 INSPECT ECM(HT1A OR HT1B VOLTAGE)

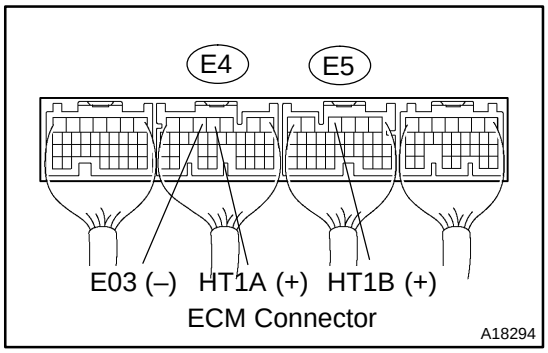

(a) Turn the ignition switch ON.
(b) Measure the voltage between the applicable terminals of the E4 and E5 ECM connectors.
Standard:

Tester Connection	Specified Condition
HT1A (E5–4) – E03 (E4–5)	9 to 14 V
HT1B (E5–4) – E03 (E4–5)	9 to 14 V

OK → **REPLACE ECM (See page 10–11)**

NG

4	CHECK HARNESS AND CONNECTOR(HEATED OXYGEN SENSOR – ECM, HEATED OXYGEN SENSOR – EFI RELAY)

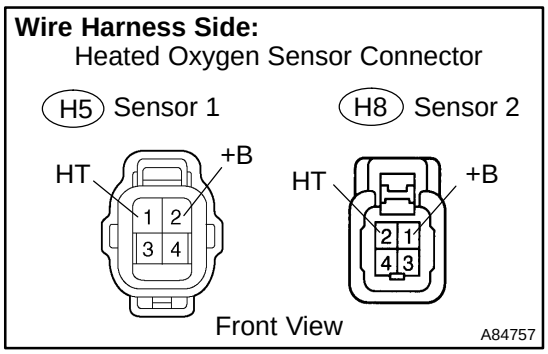

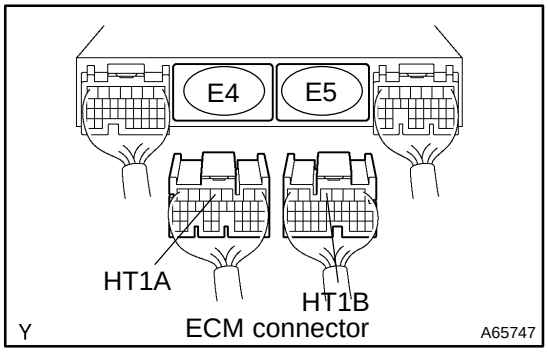

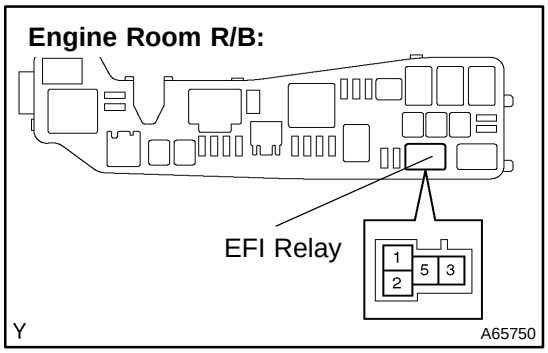

(a) Check the harness and connector between the ECM and heated oxygen sensor connectors.

(1) Disconnect the H5 or H8 heated oxygen sensor connector.

(2) Disconnect the E4 or E5 ECM connector.

(3) Check the resistance between the wire harness side connectors.

Standard (Check for open):

Tester Connection	Specified Condition
HT (H5–1) – HT1A (E4–4)	Below 1 Ω
HT (H8–2) – HT1B (E5–4)	Below 1 Ω

Standard (Check for short):

Tester Connection	Specified Condition
HT (H5–1) or HT1A (E4–4) – Body ground	10 kΩ or higher
HT (H8–2) or HT1B (E5–4) – Body ground	10 kΩ or higher

(4) Reconnect the heated oxygen sensor connector.

(5) Reconnect the ECM connector.

(b) Check the harness and connector between the heated oxygen sensor connector and EFI relay.

(1) Disconnect the H5 or H8 heated oxygen sensor connector.

(2) Remove the EFI relay from the engine room R/B.

(3) Check the resistance between the wire harness side connectors.

Standard (Check for open):

Tester Connection	Specified Condition
+B (H5–2) – EFI relay (3)	Below 1 Ω
+B (H8–1) – EFI relay (3)	Below 1 Ω

Standard (Check for short):

Tester Connection	Specified Condition
+B (H5–2) or EFI relay (3) – Body ground	10 kΩ or higher
+B (H8–1) or EFI relay (3) – Body ground	10 kΩ or higher

(4) Reconnect the heated oxygen sensor connector.

(5) Reinstall the EFI relay.

NG → **REPAIR OR REPLACE HARNESS OR CONNECTOR**

OK

REPLACE ECM (See page 10–11)

DTC	P0100	MASS OR VOLUME AIR FLOW CIRCUIT

DTC	P0102	MASS OR VOLUME AIR FLOW CIRCUIT LOW INPUT

DTC	P0103	MASS OR VOLUME AIR FLOW CIRCUIT HIGH INPUT

CIRCUIT DESCRIPTION

The MAF (Mass Air Flow) sensor measures the amount of air flowing through the throttle valve. The ECM uses this information to determine the fuel injection time and provide a proper air–fuel ratio. Inside the MAF sensor, there is a heated platinum wire exposed to the flow of intake air.

By applying a specific current to the wire, the ECM heats this wire to a given temperature. The flow of incoming air cools the wire and an internal thermister, changing their resistance. To maintain a constant current value, the ECM varies the voltage applied to these components in the MAF sensor. The voltage level is proportional to the airflow through the sensor and the ECM interprets this voltage as the intake air amount.

The circuit is constructed so that the platinum hot wire and the temperature sensor provides a bridge circuit, with the power transistor controlled so that the potential of A and B remains equal to maintain the set temperature.

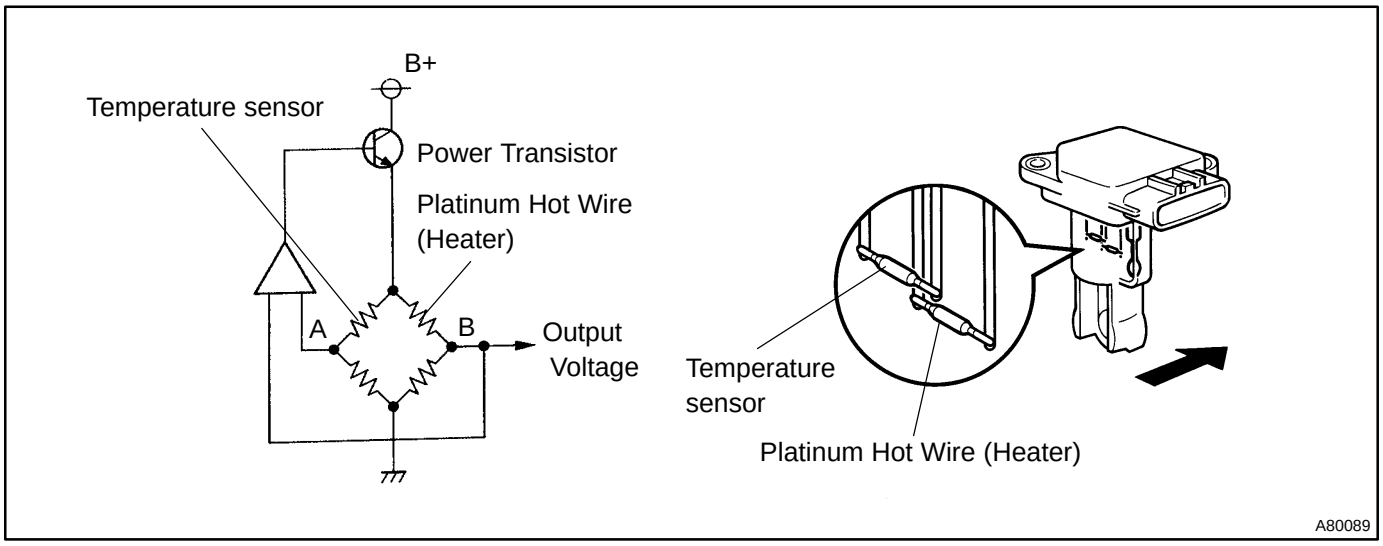

DTC No.	DTC Detection Condition	Trouble Area
P0100	When the mass air flow sensor circuit has an open or short for more than 3 seconds.	• Open or short in mass air flow sensor circuit • Mass air flow sensor • ECM
P0102	When the mass air flow sensor circuit has an open for more than 3 seconds.	
P0103	When the mass air flow sensor circuit has a short for more than 3 seconds.	

HINT:

After confirming DTC P0100, P0102 or P0103, confirm the mass air flow ratio in the ”DIAGNOSIS / ENHANCED OBD II / DATA LIST / ALL” using the hand–held tester or the OBD II scan tool.

Air Flow Value (gm/s)	Malfunction
Approx. 0.0	• Mass air flow sensor power source circuit open • VG circuit open or short
271.0 or more	• EVG circuit open

MONITOR DESCRIPTION

If there is a defect in the sensor or an open or short circuit, the voltage level will deviate outside the normal operating range. The ECM interprets this deviation as a defect in the MAF sensor and sets a DTC.
Example:
When the sensor voltage output is less than 0.2 V or more than 4.9 V and if either the condition continues for more than 3 seconds.

MONITOR STRATEGY

Related DTCs	P0100	Mass air flow sensor circuit range check (fluttering)
	P0102	Mass air flow sensor circuit range check (low voltage)
	P0103	Mass air flow sensor circuit range check (high voltage)
Required sensors/components	Mass air flow sensor	
Frequency of operation	Continuous	
Duration	3 seconds	
MIL operation	Immediately (when engine speed at 4,000rpm or less) 2 driving cycles (when engine speed at 4,000 rpm or more)	
Sequence of operation	None	

TYPICAL ENABLING CONDITIONS

The monitor will run whenever the following DTCs are not present	See ”List of Disable a Monitor” (On page 05–25)

TYPICAL MALFUNCTION THRESHOLDS

Detection Criteria	Threshold
P0100:	
Mass air flow sensor voltage	Less than 0.2 V or more than 4.9 V
P0102:	
Mass air flow sensor voltage	Less than 0.2 V
P0103:	
Mass air flow sensor voltage	More than 4.9 V

COMPONENT OPERATING RANGE

Parameter	Standard Value
Mass air flow sensor voltage	0.4 to 2.2 V

WIRING DIAGRAM

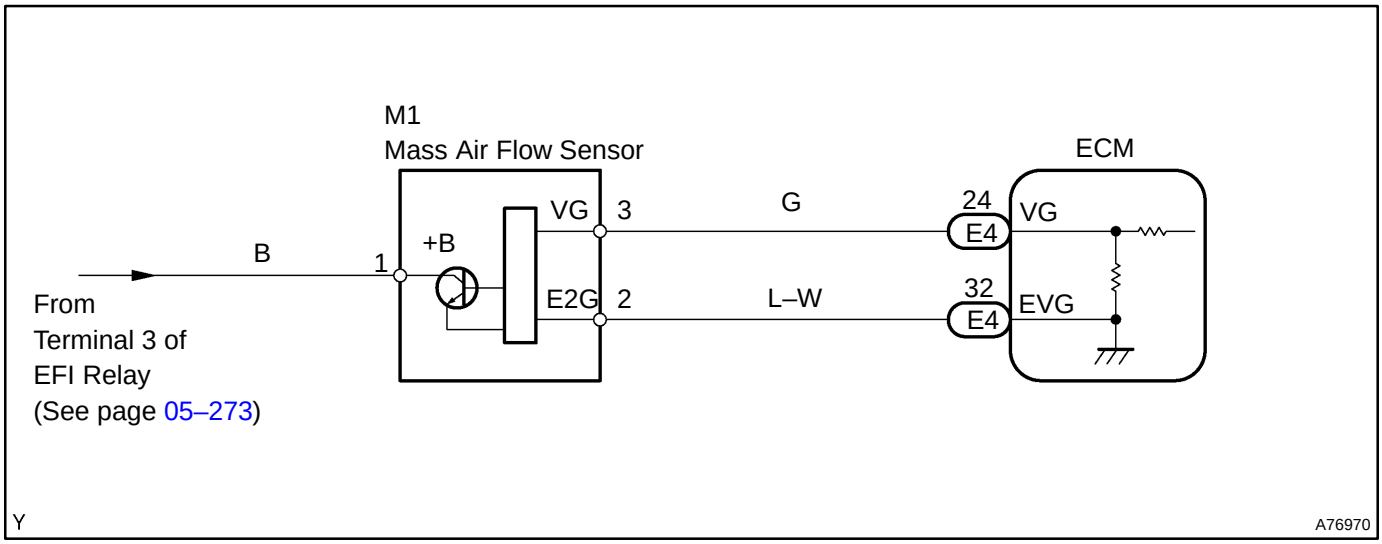

INSPECTION PROCEDURE

HINT:

Read freeze frame data using the hand−held tester or the OBD II scan tool. Freeze frame data records the engine conditions when a malfunction is detected. When troubleshooting, it is useful for determining whether the vehicle was running or stopped, the engine was warmed up or not, the air–fuel ratio was lean or rich, etc. at the time of the malfunction.

1	READ VALUE OF HAND–HELD TESTER OR OBD II SCAN TOOL(MASS AIR FLOW RATE)

(a) Connect the hand–held tester or the OBD II scan tool to the DLC3.
(b) Start the engine.
(c) Push the hand–held tester or the OBD II scan tool main switch ON.
(d) Select the item ”DIAGNOSIS / ENHANCED OBD II / DATA LIST / ALL / MAF” and read its value displayed on the hand–held tester or the OBD II scan tool.

Result:

Air Flow Rate (gm/s)	Proceed to
0.0	A
271.0 or more	B
Between 1.0 and 270.0 (*1)	C

*1: The value must be changed when the throttle valve is opened or closed.

B → **Go to step 6**

C → **CHECK FOR INTERMITTENT PROBLEMS (See page 05–41)**

A

2 INSPECT MASS AIR FLOW SENSOR(POWER SOURCE)

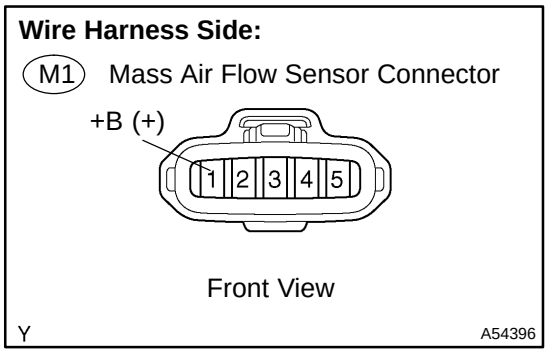

(a) Turn the ignition switch ON.
(b) Disconnect the M1 mass air flow sensor connector.
(c) Measure the voltage between the terminal of the wire harness side connector and body ground.

Standard:

Tester Connection	Specified Condition
+B (M1–1) – Body ground	9 to 14 V

(d) Reconnect the mass air flow sensor connector.

NG → **Go to step 5**

OK

3 INSPECT ECM(VG VOLTAGE)

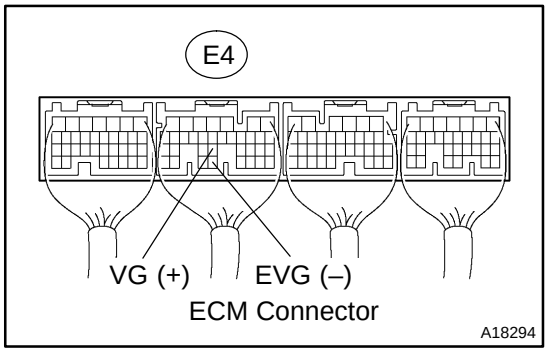

(a) Start the engine.
(b) Measure the voltage between the terminals of the E4 ECM connector.

HINT:
The shift position should be P or N and the A/C switch should be turned OFF.

Standard:

Tester Connection	Condition	Specified Condition
VG (E4–24) – EVG (E4–32)	Engine is idling	1.1 to 1.5 V

NG → **REPLACE ECM (See page 10–11)**

OK

4 CHECK HARNESS AND CONNECTOR(MASS AIR FLOW SENSOR – ECM)

Wire Harness Side:

M1 Mass Air Flow Sensor Connector

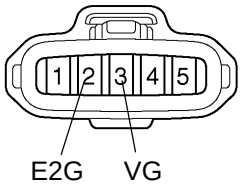

Front View

Y A54396

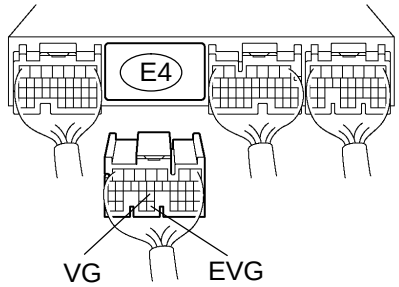

Y ECM Connector A65745

(a) Disconnect the M1 mass air flow sensor connector.
(b) Disconnect the E4 ECM connector.
(c) Check the resistance between the wire harness side connectors.

Standard (Check for open):

Tester Connection	Specified Condition
VG (M1–3) – VG (E4–24)	Below 1 Ω
E2G (M1–2) – EVG (E4–32)	

Standard (Check for short):

Tester Connection	Specified Condition
VG (M1–3) or VG (E4–24) – Body ground	10 kΩ or higher

(d) Reconnect the mass air flow sensor connector.
(e) Reconnect the ECM connector.

NG → **REPAIR OR REPLACE HARNESS OR CONNECTOR**

OK

REPLACE MASS AIR FLOW SENSOR

5 CHECK HARNESS AND CONNECTOR(MASS AIR FLOW SENSOR – EFI RELAY)

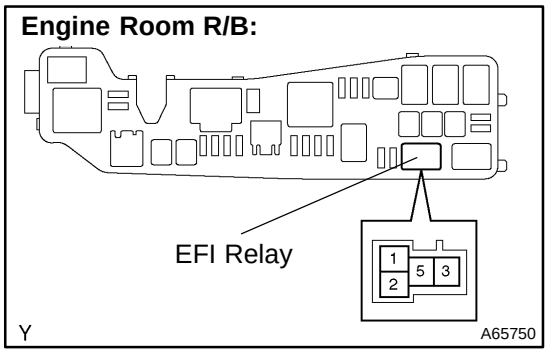

(a) Remove the EFI relay from the engine room R/B.
(b) Disconnect the M1 mass air flow sensor connector.
(c) Check the resistance between the wire harness side connectors.

Standard (Check for open):

Tester Connection	Specified Condition
+B (M1–1) – EFI relay (3)	Below 1 Ω

Standard (Check for short):

Tester Connection	Specified Condition
+B (M1–1) or EFI relay (3) – Body ground	10 kΩ or higher

(d) Reconnect the mass air flow sensor connector.
(e) Reinstall the EFI relay.

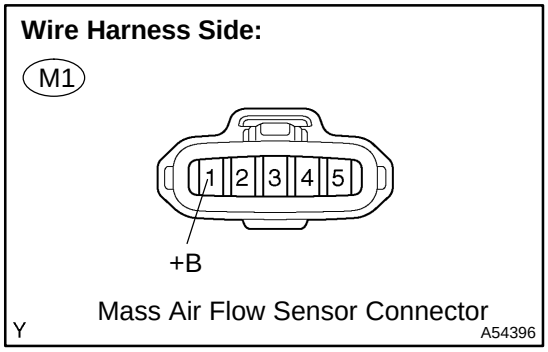

NG → **REPAIR OR REPLACE HARNESS OR CONNECTOR**

OK

CHECK FOR ECM POWER SOURCE CIRCUIT (See page 05–273)

6 INSPECT ECM(SENSOR GROUND)

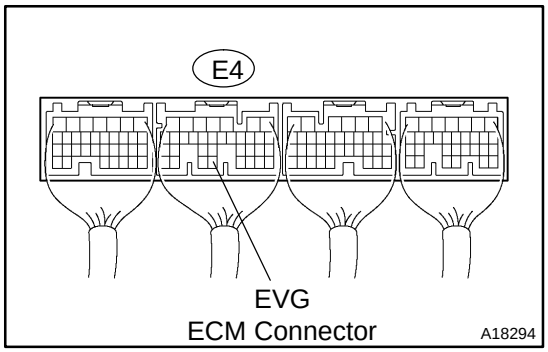

(a) Check the resistance between the terminals of the E4 ECM connector.

Standard:

Tester Connection	Specified Condition
EVG (E4–32) – Body ground	Below 1 Ω

NG → **REPLACE ECM (See page 10–11)**

OK

7	CHECK HARNESS AND CONNECTOR(MASS AIR FLOW SENSOR – ECM)

Wire Harness Side:

M1 Mass Air Flow Sensor Connector

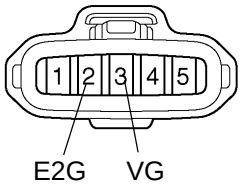

Front View

Y A54396

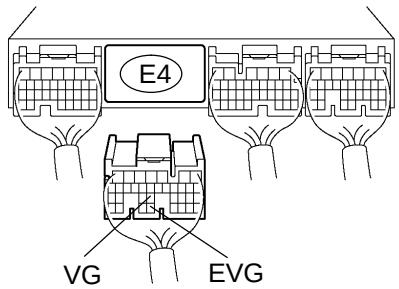

Y ECM Connector A65745

(a) Disconnect the M1 mass air flow sensor connector.
(b) Disconnect the E4 ECM connector.
(c) Check the resistance between the wire harness side connectors.

Standard (Check for open):

Tester Connection	Specified Condition
VG (M1–3) – VG (E4–24)	Below 1 Ω
E2G (M1–2) – EVG (E4–32)	

Standard (Check for short):

Tester Connection	Specified Condition
VG (M1–3) or VG (E4–24) – Body ground	10 kΩ or higher

(d) Reconnect the ECM connector.
(e) Reconnect the mass air flow sensor connector.

NG → **REPAIR OR REPLACE HARNESS OR CONNECTOR**

OK

REPLACE MASS AIR FLOW SENSOR

DTC	P0101	MASS OR VOLUME AIR FLOW CIRCUIT RANGE/PERFORMANCE PROBLEM

CIRCUIT DESCRIPTION

Refer to DTCs P0100 on page 05–65.

DTC No.	DTC Detection Condition	Trouble Area
P0101	After engine is warmed up, conditions (a) to (d) continue for more than 10 seconds (2 trip detection logic): (a) Engine speed less than 900 rpm (b) Throttle valve fully closed (c) Mass air flow sensor output greater than 2.2 V (d) Engine coolant temperature higher than 70°C (158°F)	• Mass air flow sensor
	Conditions (a) and (b) continue for more than 6 seconds: (2 trip detection logic) (a) VTA greater than 0.1 V (b) Mass air flow sensor output less than 0.4 V	

MONITOR DESCRIPTION

The MAF (Mass Air Flow) sensor helps the ECM calculates the amount of air flowing through the throttle valve. The ECM uses this information to determine the fuel injection time and provides a proper air–fuel ratio. Inside the MAF sensor, there is a heated platinum wire exposed to the flow of intake air. By applying a specific current to the wire, the ECM heats this wire to a given temperature. The flow of incoming air cools the wire and an internal thermister, changing their resistance. To maintain a constant current value, the ECM varies the voltage applied to these components in the MAF sensor. The voltage level is proportional to the air flow through the sensor and the ECM interprets this voltage as the intake air amount. If there is a defect in the sensor or an open or short circuit, the voltage level will deviate outside the normal operating range. The ECM interprets this deviation as a defect in the MAF sensor and sets a DTC.
Example: If the voltage is more than 2.2 V at idle, or less than 0.4 V at idle off, the ECM interprets this as a defect in the MAF sensor and sets a DTC.

MONITOR STRATEGY

Related DTCs	P0101	Mass air flow sensor rationality
Required sensors/components	Main sensors	Mass air flow sensor
	Related sensors	Engine speed sensor, engine coolant temperature sensor, throttle position sensor
Frequency of operation	Continuous	
Duration	10 seconds (high voltage) 6 seconds (Low voltage)	
MIL operation	2 driving cycles	
Sequence of operation	None	

TYPICAL ENABLING CONDITIONS

Item	Specification	
	Minimum	Maximum
The monitor will run whenever the following DTCs are not present	See "List of Disable a Monitor" (On page 05–25)	
High voltage:		
Engine speed	–	900 rpm
Idle	ON	
Engine coolant temperature	70°C (158°F)	–
Low voltage:		
Engine speed	0 rpm	–
Throttle position	0.1 V	–

TYPICAL MALFUNCTION THRESHOLDS

Detection Criteria	Threshold
Mass air flow sensor voltage (high voltage)	More than 2.2 V
Mass air flow sensor voltage (low voltage)	Less than 0.4 V

WIRING DIAGRAM

Refer to DTC P0100 on page 05–65.

INSPECTION PROCEDURE

HINT:

Read freeze frame data using the hand−held tester or the OBD II scan tool. Freeze frame data records the engine conditions when a malfunction is detected. When troubleshooting, it is useful for determining whether the vehicle was running or stopped, the engine was warmed up or not, the air–fuel ratio was lean or rich, etc. at the time of the malfunction.

1 CHECK OTHER DTC OUTPUT(IN ADDITION TO DTC P0101)

(a) Connect the hand–held tester or the OBD II scan tool to the DLC3.
(b) Turn the ignition switch ON and push the hand–held tester or the OBD II scan tool main switch ON.
(c) Select the item "DIAGNOSIS / ENHANCED OBD II / DTC INFO / CURRENT CODES".
(d) Read the DTCs.

Result:

Display (DTC output)	Proceed to
P0101 and other DTCs	A
P0101	B

HINT:

If any other codes besides P0101 are output, perform the troubleshooting for those DTCs first.

B → **REPLACE MASS AIR FLOW SENSOR**

A

GO TO RELEVANT DTC CHART (See page 05–35)

DTC	P0110	INTAKE AIR TEMPERATURE CIRCUIT

DTC	P0112	INTAKE AIR TEMPERATURE CIRCUIT LOW INPUT

DTC	P0113	INTAKE AIR TEMPERATURE CIRCUIT HIGH INPUT

CIRCUIT DESCRIPTION

(Fig.1)

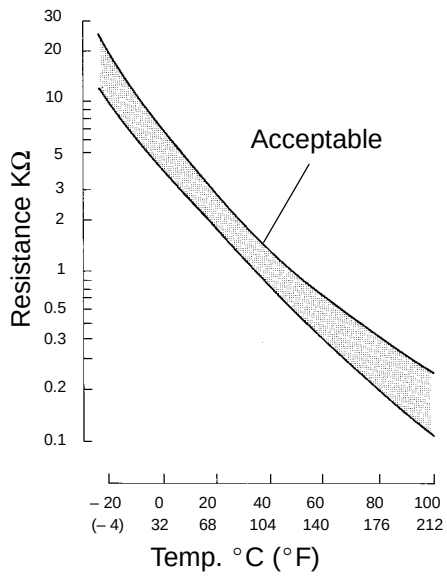

The intake air temperature (IAT) sensor, mounted on the mass air flow (MAF) sensor, monitors the intake air temperature. The IAT sensor has a thermistor that varies its resistance depending on the temperature of the intake air. When the air temperature is low, the resistance in the thermistor increases. When the temperature is high, the resistance drops. The variations in resistance are reflected as voltage changes to the ECM terminal. (See Fig. 1).

The intake air temperature sensor is connected to the ECM. The 5 V power source voltage in the ECM is applied to the intake air temperature sensor from terminal THA (THAR) via resistor R.

That is, the resistor R and the intake air temperature sensor are connected in series. When the resistance value of the intake air temperature sensor changes in accordance with changes in the intake air temperature, the potential at terminal THA (THAR) also changes. Based on this signal, the ECM increases the fuel injection volume to improve the drive ability during cold engine operation.

DTC No.	Proceed to	DTC Detection Condition	Trouble Area
P0110	Step 1	Open or short in intake air temperature sensor circuit for 0.5 seconds	• Open or short in intake air temperature sensor circuit • Intake air temperature sensor (built in mass air flow sensor) • ECM
P0112	Step 4	Short in intake air temperature sensor circuit for 0.5 seconds	
P0113	Step 2	Open in intake air temperature sensor circuit for 0.5 seconds	

HINT:

After confirming DTC P0110, P0112 or P0113, confirm the intake air temperature in the ”DIAGNOSIS / ENHANCED OBD II / DATA LIST / ALL” using the hand–held tester or the OBD II scan tool.

Temperature Displayed	Malfunction
–40˚C (–40˚F)	Open circuit
140˚C (284˚F) or more	Short circuit

MONITOR DESCRIPTION

The ECM monitors the sensor voltage and uses this value to calculate the intake air temperature. When the sensor output voltage deviates from the normal operating range, the ECM interprets this as a fault in the IAT sensor and sets a DTC.

Example:

When the sensor voltage output equal to –40°C (–40°F) or more than 140°C (284°F).

MONITOR STRATEGY

Related DTCs	P0110	Intake air temperature sensor range check (fluttering)
	P0112	Intake air temperature sensor range check (low resistance)
	P0113	Intake air temperature sensor range check (high resistance)
Required sensors/components	Intake air temperature sensor	
Frequency of operation	Continuous	
Duration	0.5 seconds	
MIL operation	Immediately	
Sequence of operation	None	

TYPICAL ENABLING CONDITIONS

The monitor will run whenever the following DTCs are not present	See ”List of Disable a Monitor” (On page 05–25)

TYPICAL MALFUNCTION THRESHOLDS

Detection Criteria	Threshold
P0110:	
Intake air temperature sensor resistance (Intake air temperature)	Less than 98.5 Ω or more than 156 kΩ (more than 140°C (284°F) or less than –40°C (–40°F)
P0112:	
Intake air temperature sensor resistance (Intake air temperature)	Less than 98.5 Ω (more than 140°C (284°F))
P0113:	
Intake air temperature sensor resistance (Intake air temperature)	More than 156 kΩ (less than –40°C (–40°F))

COMPONENT OPERATING RANGE

Parameter	Standard Value
Intake air temperature sensor resistance	98.5 Ω (140°C (281°F)) to 156 kΩ (–40°C (–40°F)

WIRING DIAGRAM

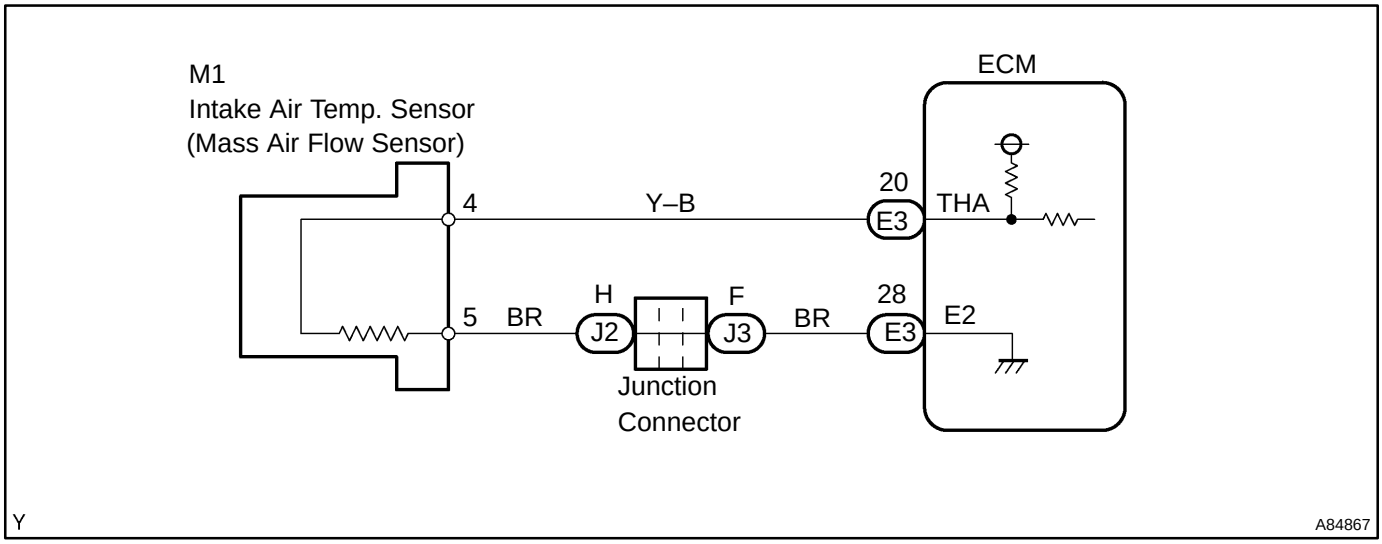

2004 COROLLA (RM1037U)

INSPECTION PROCEDURE

HINT:

- If different DTCs related to different systems that have terminal E2 as the ground terminal are output simultaneously, terminal E2 may be open.
- Read freeze frame data using the hand−held tester or the OBD II scan tool. Freeze frame data records the engine conditions when a malfunction is detected. When troubleshooting, it is useful for determining whether the vehicle was running or stopped, the engine was warmed up or not, the air–fuel ratio was lean or rich, etc. at the time of the malfunction.

1	READ VALUE OF HAND–HELD TESTER OR OBD II SCAN TOOL(INTAKE AIR TEMPERATURE)

(a) Connect the hand–held tester or the OBD II scan tool to the DLC3.
(b) Turn the ignition switch ON and push the hand–held tester or the OBD II scan tool main switch ON.
(c) Select the item ”DIAGNOSIS / ENHANCED OBD II / DATA LIST / ALL / INTAKE AIR” and read its value displayed on the hand–held tester or the OBD II scan tool.
Temperature: Same value as the actual intake air temperature.
Result:

Temperature Displayed	Proceed to
–40˚C (–40˚F)	A
140˚C (284˚F) or more	B
OK (Same as present temperature)	C

HINT:

- If there is an open circuit, the hand–held tester or the OBD II scan tool indicates –40˚C (–40˚F).
- If there is a short circuit, the hand–held tester or the OBD II scan tool indicates 140˚C (284˚F) or more.

B → **Go to step 4**

C → **CHECK FOR INTERMITTENT PROBLEMS (See page 05–41)**

A

2	READ VALUE OF HAND–HELD TESTER OR OBD II SCAN TOOL(CHECK FOR OPEN IN WIRE HARNESS)

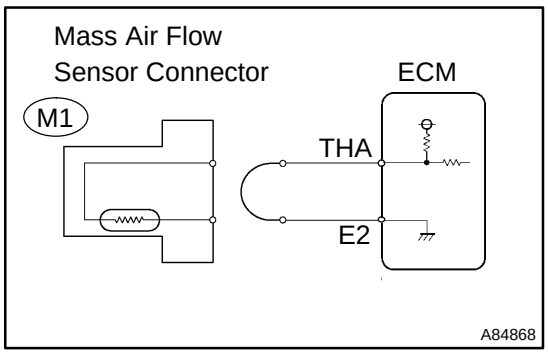

(a) Disconnect the M1 mass air flow sensor connector.
(b) Connect terminals THA and E2 of the mass air flow sensor wire harness side connector.
(c) Turn the ignition switch ON.
(d) Select the item ”DIAGNOSIS / ENHANCED OBD II / DATA LIST / ALL / INTAKE AIR” and read its value displayed on the hand–held tester or the OBD II scan tool.
Temperature value: 140°C (284°F) or more
(e) Reconnect the mass air flow sensor connector.

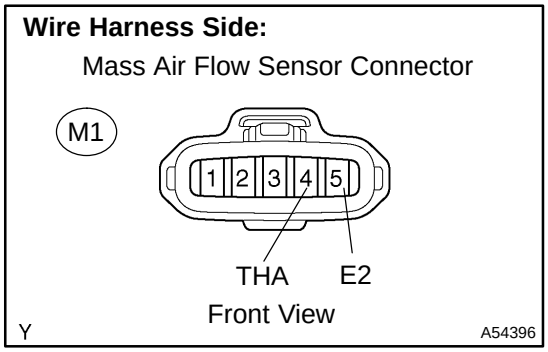

OK → **CONFIRM GOOD CONNECTION AT SENSOR. IF OK, REPLACE MASS AIR FLOW SENSOR**

NG

3	READ VALUE OF HAND–HELD TESTER OR OBD II SCAN TOOL(CHECK FOR OPEN IN ECM)

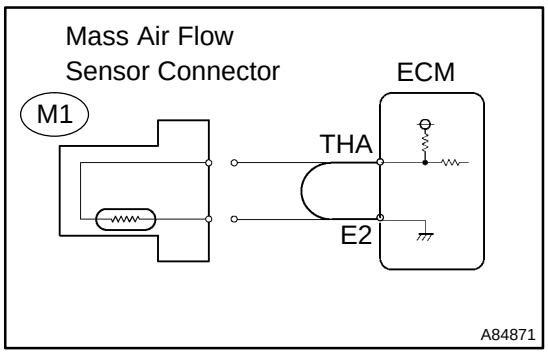

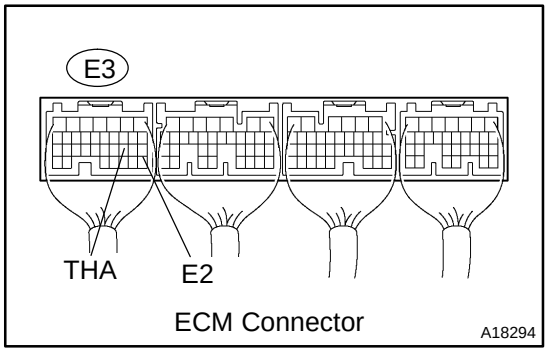

(a) Disconnect the M1 mass air flow sensor connector.
(b) Connect the terminals THA and E2 of the E3 ECM connector.

HINT:
Before checking, do a visual and contact pressure check on the ECM connector.

(c) Turn the ignition switch ON.
(d) Select the item ”DIAGNOSIS / ENHANCED OBD II / DATA LIST / ALL / INTAKE AIR” and read its value displayed on the hand–held tester or the OBD II scan tool.
Temperature value: 140°C (284°F) or more
(e) Reconnect the mass air flow sensor connector.

OK → **REPAIR OR REPLACE HARNESS OR CONNECTOR**

NG

CONFIRM GOOD CONNECTION AT ECM. IF OK, REPLACE ECM (See page 10–11)

4	READ VALUE OF HAND–HELD TESTER OR OBD II SCAN TOOL(CHECK FOR SHORT IN WIRE HARNESS)

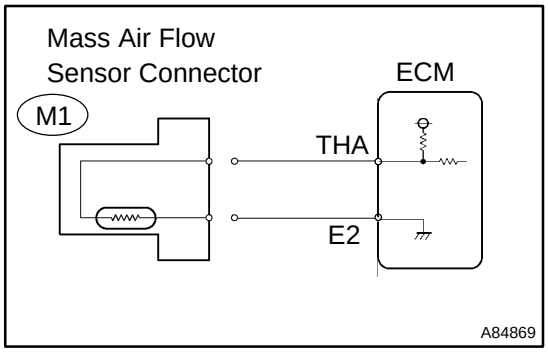

(a) Disconnect the M1 mass air flow sensor connector.
(b) Turn the ignition switch ON.
(c) Select the item ”DIAGNOSIS / ENHANCED OBD II / DATA LIST / ALL / INTAKE AIR” and read its value displayed on the hand–held tester or the OBD II scan tool.
Temperature value: –40°C (–40°F)
(d) Reconnect the mass air flow sensor connector.

OK → **REPLACE MASS AIR FLOW SENSOR**

NG

5	READ VALUE OF HAND–HELD TESTER OR OBD II SCAN TOOL(CHECK FOR SHORT IN ECM)

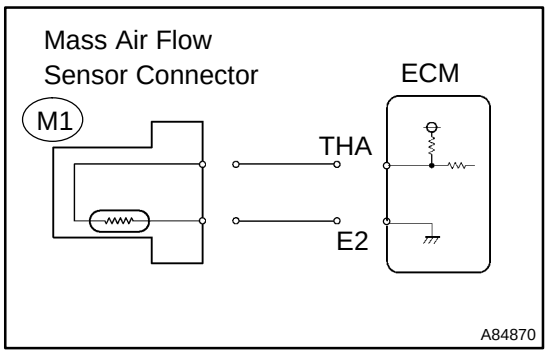

(a) Disconnect the E3 ECM connector.
(b) Turn the ignition switch ON.
(c) Select the item ”DIAGNOSIS / ENHANCED OBD II / DATA LIST / ALL / INTAKE AIR” and read its value displayed on the hand–held tester or the OBD II scan tool.
Temperature value: –40°C (–40°F)
(d) Reconnect the ECM connector.

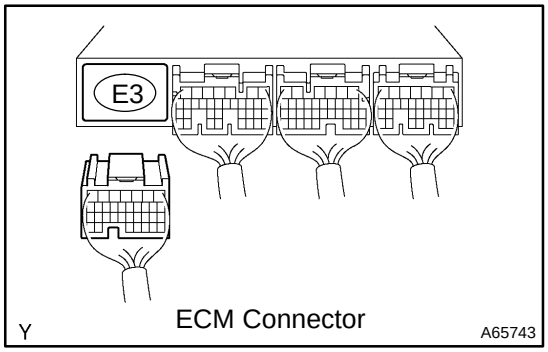

OK → **REPAIR OR REPLACE HARNESS OR CONNECTOR**

NG

REPLACE ECM (See page 10–11)

DTC	P0115	ENGINE COOLANT TEMPERATURE CIRCUIT

DTC	P0117	ENGINE COOLANT TEMPERATURE CIRCUIT LOW INPUT

DTC	P0118	ENGINE COOLANT TEMPERATURE CIRCUIT HIGH INPUT

CIRCUIT DESCRIPTION

A thermistor is built in the engine coolant temperature sensor and changes the resistance value according to the engine coolant temperature.
The structure of the sensor and connection to the ECM is the same as those of the intake air temperature sensor.
HINT:
If the ECM detects the DTC P0115, P0117 or P0118, it operates the fail–safe function in which the engine coolant temperature is assumed to be 80 °C (176 °F).

DTC No.	Proceed to	DTC Detection Condition	Trouble Area
P0115	Step 1	Open or short in engine coolant temperature sensor circuit for 0.5 seconds	• Open or short in engine coolant temperature sensor circuit • Engine coolant temperature sensor • ECM
P0117	Step 4	Short in engine coolant temperature sensor circuit for 0.5 seconds	
P0118	Step 2	Open in engine coolant temperature sensor circuit for 0.5 seconds	

HINT:
After confirming DTC P0115, P0117 or P0118, confirm the engine coolant temperature in the ”DIAGNOSIS/ ENHANCED OBD II/DATA LIST/ALL” using the hand–held tester or the OBD II scan tool.

Temperature Displayed	Malfunction
–40˚C (–40˚F)	Open circuit
140˚C (284˚F) or more	Short circuit

MONITOR DESCRIPTION

The engine coolant temperature (ECT) sensor is used to monitor the engine coolant temperature. The ECT sensor has a thermistor that varies its resistance depending on the temperature of the engine coolant. When the coolant temperature is low, the resistance in the thermistor increases. When the temperature is high, the resistance drops. The variations in resistance are reflected in the voltage output from the sensor. The ECM monitors the sensor voltage and uses this value to calculate the engine coolant temperature. When the sensor output voltage deviates from the normal operating range, the ECM interprets this as a fault in the ECT sensor and sets a DTC.
Example:
When the ECM calculates that the ECT is –40°C (–40°F), or more than 140°C (284°F), and if either the condition continues for 0.5 sec or more, the ECM will set a DTC.

MONITOR STRATEGY

Related DTCs	P0115	Engine coolant temperature sensor range check (fluttering)
	P0117	Engine coolant temperature sensor range check (low resistance)
	P0118	Engine coolant temperature sensor range check (high resistance)
Required sensors/components	Engine coolant temperature sensor	
Frequency of operation	Continuous	
Duration	0.5 seconds	
MIL operation	Immediately	
Sequence of operation	None	

TYPICAL ENABLING CONDITIONS

The monitor will run whenever the following DTCs are not present	See ”List of Disable a Monitor” (On page 05–25)

TYPICAL MALFUNCTION THRESHOLDS

Detection Criteria	Threshold
P0115:	
Engine coolant temperature sensor resistance (coolant temperature)	Less than 79 Ω or more than 156 kΩ (more than 140°C (284°F) or less than –40°C (–40°F))
P0117:	
Engine coolant temperature sensor resistance (coolant temperature)	Less than 79 Ω (more than 140°C (284°F))
P0118:	
Engine coolant temperature sensor resistance (coolant temperature)	More than 156 kΩ (less than –40°C (–40°F))

COMPONENT OPERATING RANGE

Parameter	Standard Value
Engine coolant temperature sensor resistance	79 Ω (140°C (281°F)) to 156 kΩ (–40°C (–40°F))

WIRING DIAGRAM

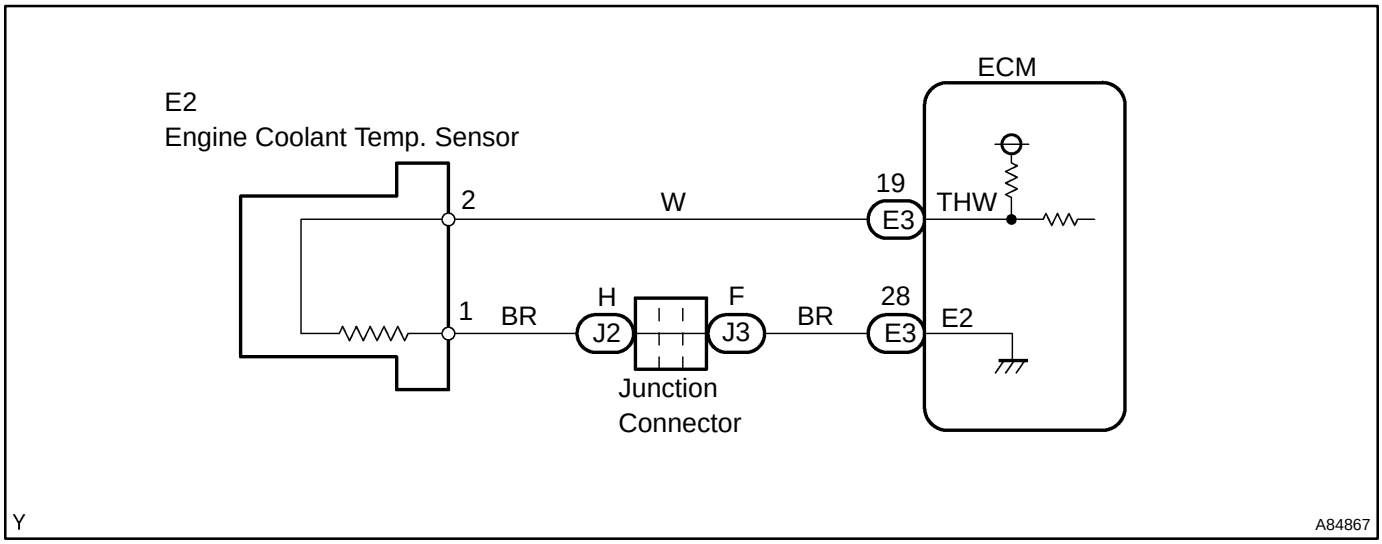

INSPECTION PROCEDURE

HINT:

- If different DTCs related to different systems that have terminal E2 as the ground terminal are output simultaneously, terminal E2 may be open.
- Read freeze frame data using the hand−held tester or the OBD II scan tool. Freeze frame data records the engine conditions when a malfunction is detected. When troubleshooting, it is useful for determining whether the vehicle was running or stopped, the engine was warmed up or not, the air–fuel ratio was lean or rich, etc. at the time of the malfunction.

1	READ VALUE OF HAND–HELD TESTER OR OBD II SCAN TOOL(ENGINE COOLANT TEMPERATURE)

(a) Connect the hand–held tester or the OBD II scan tool to the DLC3.
(b) Turn the ignition switch ON and push the hand–held tester or the OBD II scan tool main switch ON.
(c) Select the item ”DIAGNOSIS / ENHANCED OBD II / DATA LIST / ALL / COOLANT TEMP” and read its value displayed on the hand–held tester or the OBD II scan tool.
Temperature: Same value as the actual intake air temperature.
Result:

Temperature Displayed	Proceed to
–40˚C (–40˚F)	A
140˚C (284˚F) or more	B
OK (Same as present temperature)	C

HINT:

- If there is an open circuit, the hand–held tester or the OBD II scan tool indicates –40˚C (–40˚F).
- If there is a short circuit, the hand–held tester or the OBD II scan tool indicates 140˚C (284˚F) or more.

B → **Go to step 4**

C → **CHECK FOR INTERMITTENT PROBLEMS (See page 05–41)**

A

2	READ VALUE OF HAND–HELD TESTER OR OBD II SCAN TOOL(CHECK FOR OPEN IN WIRE HARNESS)

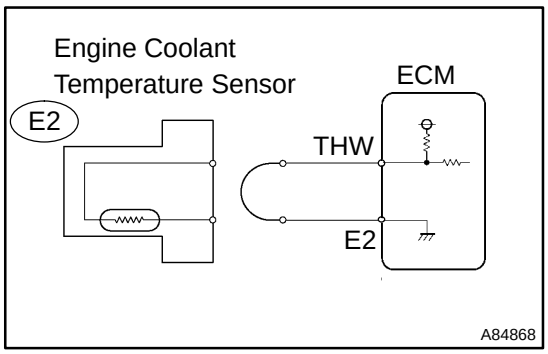

(a) Disconnect the E2 engine coolant temperature sensor connector.
(b) Connect terminals 1 and 2 of the engine coolant temperature sensor connector on the wire harness side.
(c) Turn the ignition switch ON.
(d) Select the item "DIAGNOSIS / ENHANCED OBD II / DATA LIST / ALL / COOLANT TEMP" and read its value displayed on the hand–held tester or the OBD II scan tool.
Temperature value: 140°C (284°F) or more
(e) Reconnect the engine coolant temperature sensor connector.

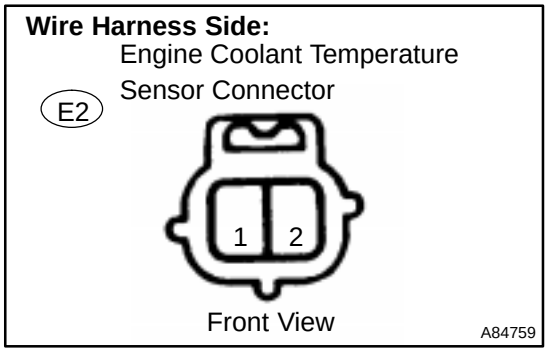

OK → **CONFIRM GOOD CONNECTION AT SENSOR. IF OK, REPLACE ENGINE COOLANT TEMP. SENSOR**

NG

3	READ VALUE OF HAND–HELD TESTER OR OBD II SCAN TOOL(CHECK FOR OPEN IN ECM)

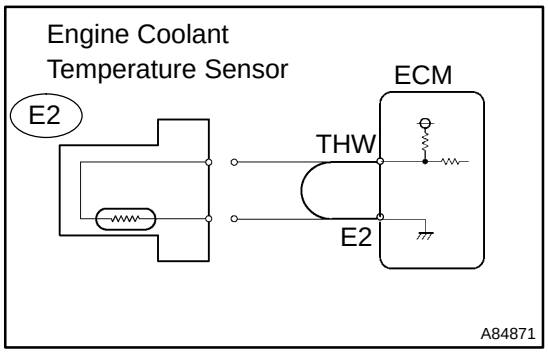

(a) Disconnect the E2 engine coolant temperature sensor connector.
(b) Connect the terminals THW and E2 of the E3 ECM connector.

HINT:
Before checking, do a visual and contact pressure check on the ECM connector.

(c) Turn the ignition switch ON.
(d) Select the item "DIAGNOSIS / ENHANCED OBD II / DATA LIST / ALL / COOLANT TEMP" and read its value displayed on the hand–held tester or the OBD II scan tool.
Temperature value: 140°C (284°F) or more
(e) Reconnect the engine coolant temperature sensor connector.

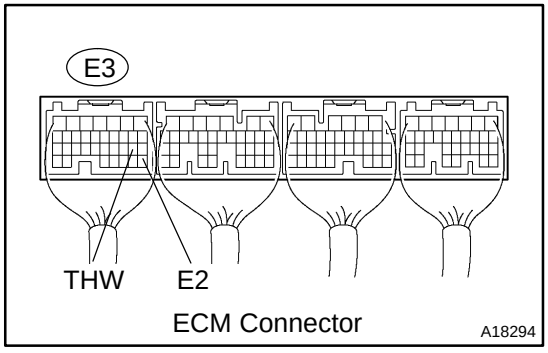

OK → **REPAIR OR REPLACE HARNESS OR CONNECTOR**

NG

CONFIRM GOOD CONNECTION AT ECM. IF OK, REPLACE ECM (See page 10–11)

4	READ VALUE OF HAND–HELD TESTER OR OBD II SCAN TOOL(CHECK FOR SHORT IN WIRE HARNESS)

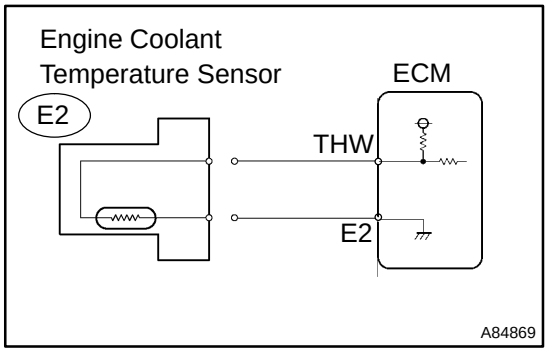

(a) Disconnect the E2 engine coolant temperature sensor connector.
(b) Turn the ignition switch ON.
(c) Select the item "DIAGNOSIS / ENHANCED OBD II / DATA LIST / ALL / COOLANT TEMP" and read its value displayed on the hand–held tester or the OBD II scan tool.
Temperature value: –40°C (–40°F)
(d) Reconnect the engine coolant temperature sensor connector.

OK → **REPLACE ENGINE COOLANT TEMPERATURE SENSOR**

NG

5	READ VALUE OF HAND–HELD TESTER OR OBD II SCAN TOOL(CHECK FOR SHORT IN ECM)

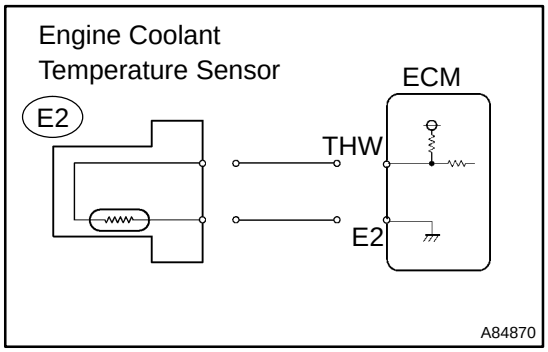

(a) Disconnect the E3 ECM connector.
(b) Turn the ignition switch ON.
(c) Select the item "DIAGNOSIS / ENHANCED OBD II / DATA LIST / ALL / COOLANT TEMP" and read its value displayed on the hand–held tester or the OBD II scan tool.
Temperature: –40°C (–40°F)
(d) Reconnect the ECM connector.

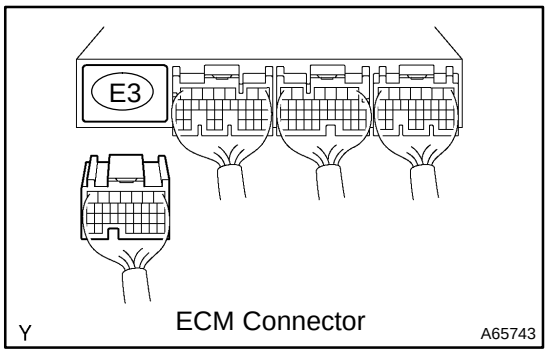

OK → **REPAIR OR REPLACE HARNESS OR CONNECTOR**

NG

REPLACE ECM (See page 10–11)

DTC	P0116	ENGINE COOLANT TEMP. CIRCUIT RANGE/PERFORMANCE PROBLEM

CIRCUIT DESCRIPTION

Refer to DTC P0115 on page 05–80.

DTC No.	DTC Detection Condition	Trouble Area
P0116	If engine coolant temperature (ECT) was between 35°C (95°F) and 60°C (140°F) when starting the engine, and also conditions (a) and (b) are met: (a) Vehicle has run with acceleration and deceleration (b) ETC still remains within 3°C (5.4°F) of the starting temperature (2 trip detection logic)	• Engine coolant temperature sensor
	If engine coolant temperature (ECT) was more than 60°C when starting the engine, and also conditions (a) and (b) are met: (a) Vehicle has run with acceleration and deceleration (b) ECT still remains within 1°C (1.8°F) of the starting temperature (6 trip detection logic)	

MONITOR DESCRIPTION

The engine coolant temperature (ECT) sensor is used to monitor the engine coolant temperature. The ECT sensor has a thermistor that varies its resistance depending on the temperature of the engine coolant. When the coolant temperature is low, the resistance in the thermistor increases. When the temperature is high, the resistance drops. The variations in resistance are reflected in the voltage output from the sensor. The ECM monitors the sensor voltage and uses this value to calculate the engine coolant temperature. When the sensor output voltage deviates from the normal operating range, the ECM interprets this as a fault in the ECT sensor and sets a DTC.

Examples:

1) Upon starting the engine, the coolant temperature (ECT) was between 35°C (95°F) and 60°C (140°F). If after driving for 250 seconds, the ECT still remains within 3°C (5.4°F) of the staring temperature, a DTC will be set. (2 trip detection logic)

2) Upon starting the engine, the coolant temperature (ECT) was over 60°C (140°F). If after driving for 250 seconds, the ECT still remains within 1°C (1.8°F) of the starting temperature, a DTC will be set. (6 trip detection logic)

MONITOR STRATEGY

Related DTCs	P0116	Engine coolant temperature sensor range check (stuck)
Required sensors/components	Main sensors	Engine coolant temperature sensor
	Related sensors	Intake air temperature sensor, crankshaft position sensor, mass air flow sensor
Frequency of operation	Continuous	
Duration	250 seconds	
MIL operation	2 driving cycles (when temperature is fixed between 35°C (95°F) and 60°C (140°F)) 6 driving cycles (when temperature is fixed at 60°C (140°F) or more)	
Sequence of operation	None	

TYPICAL ENABLING CONDITIONS

Item	Specification	
	Minimum	Maximum
The monitor will run whenever the following DTCs are not present	See "List of Disable a Monitor" (On page 05–25)	
Case 1 (when temperature is fixed between 35°C (95°F) and 60°C (140°F)):		
Cumulative idle off period	250 seconds	–
Speed increased more than 19 mph (30 km/h)	10 times	–
Engine coolant temperature	35°C (95°F)	60°C (140°F)
Intake air temperature	–6.7°C (20°F)	–
Case 2 (When temperature is fixed at 60°C (140°F) or more):		
Engine coolant temperature	60°C (140°F)	104.4°C (220°F)
Intake air temperature	–6.7°C (20°F)	–
Stop and go	Stop for 20 seconds or more and accelerate to more than 44 mph (70 km/h)	
44 mph (70 km/h) in less than 40 seconds	Decrease from 40 mph (65 km/h) to 2 mph (3 km/h) in 35 seconds and stop for 10 seconds	

TYPICAL MALFUNCTION THRESHOLDS

Detection Criteria	Threshold
Case1 (When temperature is fixed between 35°C (95°F) and 60°C (140°F)):	
Change of engine coolant temperature value	Less than 3°C (5.4°F)
Case2 (When temperature is fixed at 60°C (140°F) or more):	
Change of engine coolant temperature value	1°C (1.8°F) or less

COMPONENT OPERATING RANGE

Parameter	Standard Value
Engine coolant temperature (ECT) sensor's output	Indicating the same temperature as the actual ECT

WIRING DIAGRAM

Refer to DTC P0115 on page 05–80.

INSPECTION PROCEDURE

HINT:

- If DTCs P0115, P0116, P0117, P0118 and P0125 are output simultaneously, the engine coolant temperature sensor circuit may be open or short. Perform the troubleshooting of DTC P0115, P0117 or P0118 first.
- Read freeze frame data using the hand–held tester or the OBD II scan tool. Freeze frame data records the engine conditions when a malfunction is detected. When troubleshooting, it is useful for determining whether the vehicle was running or stopped, the engine was warmed up or not, the air–fuel ratio was lean or rich, etc. at the time of the malfunction.

REPLACE ENGINE COOLANT TEMPERATURE SENSOR

DTC	P0120	THROTTLE/PEDAL POSITION SENSOR/SWITCH ”A” CIRCUIT

DTC	P0122	THROTTLE/PEDAL POSITION SENSOR/SWITCH ”A” CIRCUIT LOW INPUT

DTC	P0123	THROTTLE/PEDAL POSITION SENSOR/SWITCH ”A” CIRCUIT HIGH INPUT

HINT:
This is the purpose for the ”throttle position sensor”.

CIRCUIT DESCRIPTION

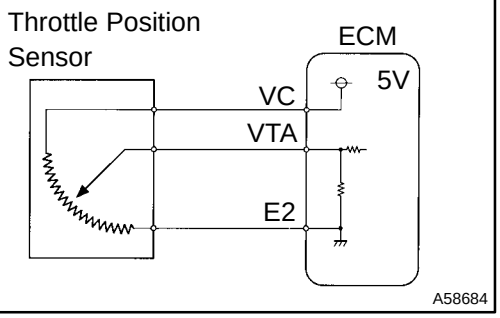

The throttle position sensor is mounted in the throttle body and detects the throttle valve opening angle.
When the throttle valve is fully closed, a voltage of approximately 0.3 to 1.0 V is applied to terminal VTA of the ECM. The voltage applied to terminal VTA of the ECM increases in proportion to the opening angle of the throttle valve and becomes approximately 3.2 to 4.9 V when the throttle valve is fully opened. The ECM judges the vehicle driving conditions from these signals input from terminal VTA, uses them as one of the conditions for deciding the air–fuel ratio correction, power increase correction and fuel–cut control etc.

DTC No.	DTC Detection Condition	Trouble Area
Condition (a) of DTC P0120, P0122 or P0123 continues for 5 seconds (Open or short in throttle position sensor circuit)		
P0120	Detection conditions for DTCs P0122 and P0123 are not satisfied but condition (a) is satisfied (a) VTA less than 0.1 V or VTA more than 4.9 V	• Open or short in throttle position sensor circuit • Throttle position sensor (built in throttle body) • ECM
P0122	(a) VTA stays less than 0.1 V for 5 seconds or more	• Throttle position sensor (built in throttle body) • Short in VTA circuit • Open in VC circuit • ECM
P0123	(a) VTA stays more than 4.9 V for 5 seconds or more	• Throttle position sensor (built in throttle body) • Open in VTA circuit • Open in E2 circuit • VC and VTA circuit are short–circuited • ECM

HINT:
After confirming DTCs, confirm the throttle valve opening percentage and closed throttle position switch condition using the hand–held tester or the OBD II scan tool.

Throttle valve opening position expressed as percentage		Trouble Area
Throttle valve fully closed	Throttle valve fully open	
0 %	0 %	VC circuit open VTA circuit open or short
Approx. 100 %	Approx. 100 %	E2 circuit open

MONITOR DESCRIPTION

The throttle position sensor varies its resistance with the throttle valve angle. The ECM applies a regulated reference voltage to the throttle position sensor “+: VC” terminal and calculates the angle of the throttle valve based on the voltage present at the throttle position sensor “signal: VTA” terminal.
When the throttle valve is near the fully closed position, the output voltage of the throttle position sensor is low. When it is near the fully open position, the output voltage is high.
If the ECM detects that the output voltage of the throttle position sensor is out of the normal range, the ECM interprets this as a malfunction in the throttle position sensor and sets a DTC.

MONITOR STRATEGY

Related DTCs	P0120	Throttle position sensor range check (fluttering)
	P0122	Throttle position sensor range check (low voltage)
	P0123	Throttle position sensor range check (high voltage)
Required sensors/components	Throttle position sensor	
Frequency of operation	Continuous	
Duration	5 seconds	
MIL operation	Immediately	
Sequence of operation	None	

TYPICAL ENABLING CONDITION

The monitor will run whenever the following DTCs are not present	See ”List of Disable a Monitor” (On page 05–25)

TYPICAL MALFUNCTION THRESHOLDS

Detection Criteria	Threshold
P0120:	
VTA voltage	Flutters beyond the normal range
P0122:	
VTA voltage	less than 0.1 V
P0123:	
VTA voltage	more than 4.9 V

COMPONENT OPERATING RANGE

Parameter	Standard Value
Throttle position sensor voltage	0.1 to 4.9 V

WIRING DIAGRAM

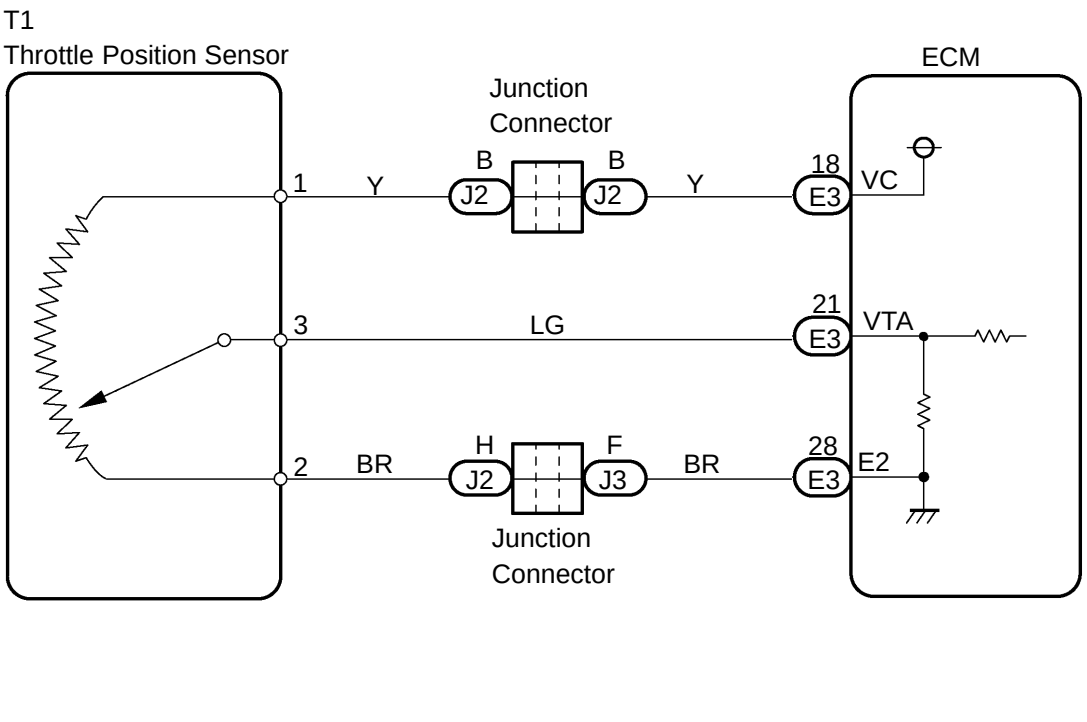

INSPECTION PROCEDURE

HINT:

- If different DTCs related to different systems that have terminal E2 as the ground terminal are output simultaneously, terminal E2 may be open.
- Read freeze frame data using the hand–held tester or the OBD II scan tool. Freeze frame data records the engine conditions when a malfunction is detected. When troubleshooting, it is useful for determining whether the vehicle was running or stopped, the engine was warmed up or not, the air–fuel ratio was lean or rich, etc. at the time of the malfunction.

Hand–held tester:

1	READ VALUE OF HAND–HELD TESTER(THROTTLE VALVE OPENING PERCENTAGE)

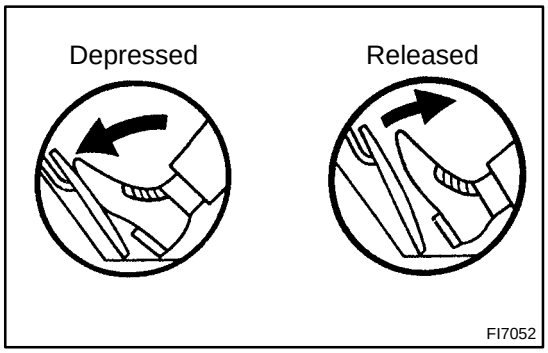

(a) Connect the hand–held tester to the DLC3.
(b) Turn the ignition switch ON.
(c) Select the item "DIAGNOSIS / ENHANCED OBD II / DATA LIST / ETCS / THROTTLE POS" and read its value displayed on the hand–held tester.

Result:

Accelerator Pedal Operation	Throttle Valve Opening Position (%)	Proceed to
Releasing and depressing	0	A
	From approx. 0 to 75	B
	Approx. 100	C

B → **CHECK FOR INTERMITTENT PROBLEMS (See page 05–41)**

C → **Go to step 4**

A

2	INSPECT THROTTLE POSITION SENSOR

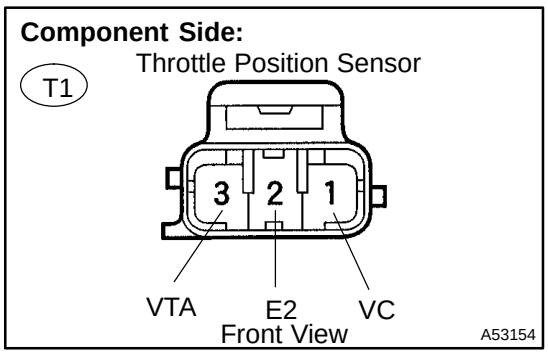

(a) Disconnect the T1 throttle position sensor connector.
(b) Measure the resistance between the terminals of the throttle position sensor.

Standard:

Tester Connection	Throttle Valve	Specified Condition
VC (T1–1) – E2 (T1–2)	—	2.5 to 5.9 kΩ
VTA (T1–3) – E2 (T1–2)	Fully closed	0.2 to 5.7 kΩ
	Fully open	2.0 to 10.2 kΩ

(c) Reconnect the throttle position sensor connector.

NG → **REPLACE THROTTLE POSITION SENSOR**

OK

3 CHECK HARNESS AND CONNECTOR(ECM – THROTTLE POSITION SENSOR)

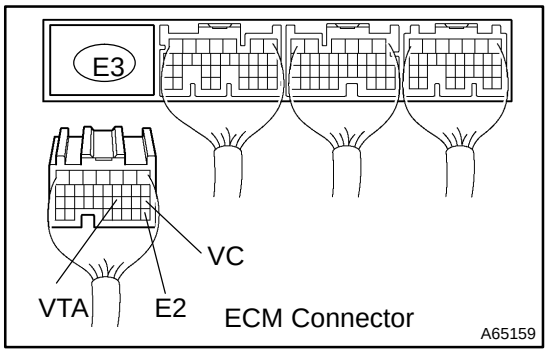

(a) Disconnect the E3 ECM connector.
(b) Measure the resistance between the terminals of the E3 ECM connector.
Standard:

Tester Connection	Throttle Valve	Specified Condition
VC (E3–18) – E2 (E3–28)	—	2.5 to 5.9 kΩ
VTA(E3–21) – E2 (E3–28)	Fully closed	0.2 to 5.7 kΩ
	Fully open	2.0 to 10.2 kΩ

(c) Check the resistance between the terminals of the E3 ECM connector.
Standard (Check for short):

Tester Connection	Specified Condition
VC (E3–18) – Body ground	10 kΩ or higher
VTA (E3–28) – Body ground	

(d) Reconnect the ECM connector.

NG → **REPAIR OR REPLACE HARNESS OR CONNECTOR**

OK

REPLACE ECM (See page10–11)

4 INSPECT THROTTLE POSITION SENSOR

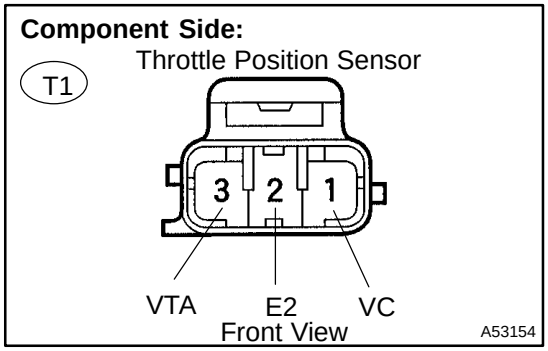

(a) Disconnect the T1 throttle position sensor connector.
(b) Measure the resistance between the terminals of the throttle position sensor.
Standard:

Tester Connection	Throttle Valve	Specified Condition
VC (T1–1) – E2 (T1–2)	—	2.5 to 5.9 kΩ
VTA (T1–3) – E2 (T1–2)	Fully closed	0.2 to 5.7 kΩ
	Fully open	2.0 to 10.2 kΩ

(c) Reconnect the throttle position sensor connector.

NG → **REPLACE THROTTLE POSITION SENSOR**

OK

5	CHECK HARNESS AND CONNECTOR(ECM – THROTTLE POSITION SENSOR)

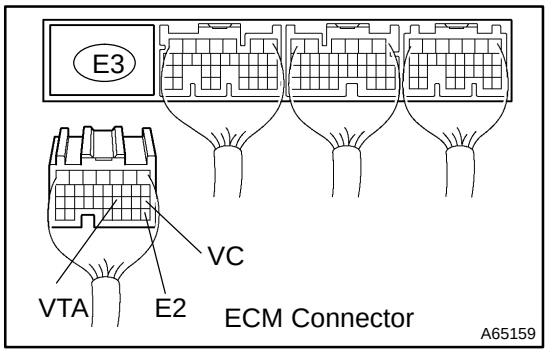

(a) Disconnect the E3 ECM connector.
(b) Disconnect the T1 throttle position sensor connector.
(c) Check the resistance between the wire harness side connectors.

Standard (Check for open):

Tester Connection	Specified Condition
VC (T1–1) – VC (E3–18)	Below 1 Ω
VTA (T1–3) – VTA (E3–21)	
E2 (T1–2) – E2 (E3–28)	

Standard (Check for short):

Tester Connection	Specified Condition
VC (T1–1) or VC (E3–18) – Body ground	10 kΩ or higher
VTA (T1–3) or VTA (E3–21) – Body ground	

(d) Reconnect the throttle position sensor connector.
(e) Reconnect the ECM connector.

Wire Harness Side:

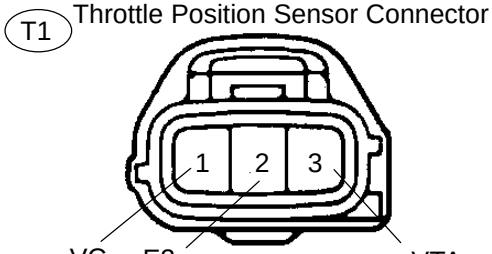

NG → **REPAIR OR REPLACE HARNESS OR CONNECTOR**

OK →

REPLACE ECM (See page 10–11)

OBD II scan tool (excluding hand–held tester):

1	INSPECT THROTTLE POSITION SENSOR

Component Side:

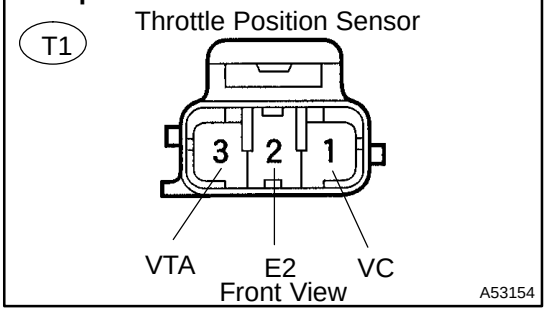

(a) Disconnect the T1 throttle position sensor connector.
(b) Measure the resistance between the terminals of the throttle position sensor.

Standard:

Tester Connection	Throttle Valve	Specified Condition
VC (T1–1) – E2 (T1–2)	—	2.5 to 5.9 kΩ
VTA (T1–3) – E2 (T1–2)	Fully closed	0.2 to 5.7 kΩ
	Fully open	2.0 to 10.2 kΩ

(c) Reconnect the throttle position sensor connector.

NG → **REPLACE THROTTLE POSITION SENSOR**

OK →

2 CHECK HARNESS AND CONNECTOR(THROTTLE POSITION SENSOR – ECM)

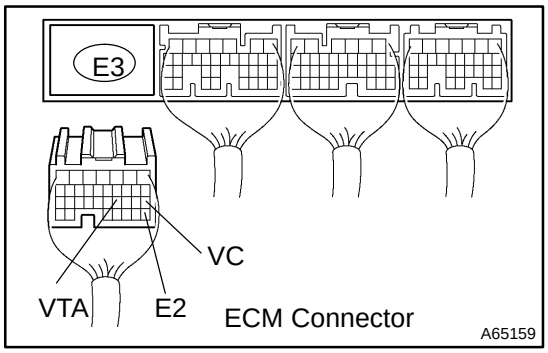

(a) Disconnect the E3 ECM connector.

(b) Measure the resistance between the terminals of the E3 ECM connector.

Standard:

Tester Connection	Throttle valve	Specified Condition
VC (E3–18) – E2 (E3–28)	—	2.5 to 5.9 kΩ
VTA(E3–21) – E2 (E3–28)	Fully closed	0.2 to 5.7 kΩ
	Fully open	2.0 to 10.2 kΩ

(c) Check the resistance between the terminals of the E3 ECM connector.

Standard (Check for short):

Tester Connection	Specified Condition
VC (E3–18) – Body ground	10 kΩ or higher
VTA (E3–28) – Body ground	

(d) Reconnect the ECM connector.

NG → **REPAIR OR REPLACE HARNESS OR CONNECTOR**

OK

REPLACE ECM (See page 10–11)

DTC	P0121	THROTTLE/PEDAL POSITION SENSOR/SWITCH ”A” CIRCUIT RANGE/PERFORMANCE PROBLEM

HINT:
This is the purpose of the ”throttle position sensor”.

CIRCUIT DESCRIPTION

Refer to DTC P0120 on page 05–87.

DTC No.	DTC Detection Condition	Trouble Area
P0121	The following condition is met 4 times. After the vehicle speed has exceeded 19 mph (30 km/h) once, the throttle position sensor output value is out of normal range when the throttle valve is closed at 0 km/h	• Throttle position sensor (built in throttle body)

MONITOR DESCRIPTION

The throttle position sensor varies its resistance with the angle of the throttle valve. The ECM applies a regulated reference voltage to the throttle position sensor “+” terminal and calculates the angle of the throttle valve based on the voltage present at the throttle position sensor “signal” terminal.
When the throttle valve is near the fully closed position, the output voltage of the throttle position sensor is low. When it is near the fully open position, the output voltage is high.
The ECM checks the indicated angle of the throttle valve during “stop and go” conditions. If the indicated angle (or voltage) in the “closed throttle” position is out of the specified range, the ECM interprets this as a malfunction in the throttle position sensor and sets a DTC.

MONITOR STRATEGY

Related DTCs	P0121	Throttle position sensor rationality
Required sensors/components	Main sensors	Throttle position sensor
	Related sensors	Vehicle speed sensor
Frequency of operation	Continuous	
Duration	Within 10 seconds	
MIL operation	2 driving cycles	
Sequence of operation	None	

TYPICAL ENABLING CONDITION

Item	Specification	
	Minimum	Maximum
The monitor will run whenever the following DTCs are not present	See ”List of Disable a Monitor” (On page 05–25)	
Throttle valve position	Closed angle position	
”Stop and Go”	4 times	–

”Stop and go” is defined as follows:
”Stop” indicates a vehicle speed of 0 mph (0 km/h). ”Go” indicates a vehicle speed of 18.6 mph (30 km/h).

TYPICAL MALFUNCTION THRESHOLDS

Detection Criteria	Threshold
Throttle valve at closed angle position	26.2° or more
	Less than 7.4°

COMPONENT OPERATING RANGE

Parameter	Standard Value
Throttle valve at closed angle position	Between 7.5° and 21°

INSPECTION PROCEDURE

HINT:

Read freeze frame data using the hand−held tester or the OBD II scan tool. Freeze frame data records the engine conditions when a malfunction is detected. When troubleshooting, it is useful for determining whether the vehicle was running or stopped, the engine was warmed up or not, the air–fuel ratio was lean or rich, etc. at the time of the malfunction.

1	CHECK OTHER DTC OUTPUT(IN ADDITION P0121)

(a) Connect the hand–held tester or the OBD II scan tool to the DLC3.
(b) Turn the ignition switch ON and push the hand–held tester or the OBD II scan tool main switch ON.
(c) Select the item ”DIAGNOSIS / ENHANCED OBD II / DTC INFO / CURRENT CODES”.
(d) Read the DTCs.

Result:

Display (DTC output)	Proceed to
”P0121” and other DTCs	A
P0121	B

HINT:

If any other codes besides P0121 is output, perform the troubleshooting for those DTCs first.

B → **REPLACE THROTTLE POSITION SENSOR**

A

GO TO RELEVANT DTC CHART (See page 05–35)

DTC	P0125	INSUFFICIENT COOLANT TEMPERATURE FOR CLOSED LOOP FUEL CONTROL

CIRCUIT DESCRIPTION

Refer to DTC P0115 on page 05–80.

DTC No.	DTC Detection Condition	Trouble Area
P0125	If the engine coolant temperature (ECT) was less than –6.6˚C (20°F) when starting the engine, and 20 minutes after the engine start, the ECT sensor still indicates below 20˚C (68°F)	• Cooling system • Engine coolant temperature sensor • Thermostat
	If the ECT was between –6.6˚C (20°F) and 10˚C (50°F) when start, 5 minutes after the start, the ECT sensor still indicates below 20˚C (68°F)	
	If the ECT was greater than 10˚C (50°F) when starting the engine, and 2 minutes after the engine start, ECT sensor still indicates below 20˚C (68°F)	

MONITOR DESCRIPTION

The engine coolant temperature (ECT) sensor is used to monitor the temperature of the engine coolant. The resistance of the sensor varies with the actual coolant temperature. The ECM applies a voltage to the sensor and the varying resistance of the sensor causes the signal voltage to vary. The ECM monitors the ECT signal voltage after engine start–up. If, after sufficient time has passed, the sensor still reports that the engine is not warm enough for closed–loop fuel control, the ECM interprets this as a fault in the sensor or cooling system.

Example:

The engine coolant temperature was 0°C (32°F) at engine start. After 5 minutes running time, the coolant temperature sensor still indicates that the engine is not warm enough to begin air–fuel ratio feedback control. The ECM interprets this as a fault in the sensor or cooling system and will set a DTC.

MONITOR STRATEGY

Related DTCs	P0125	Insufficient coolant temperature for closed loop fuel control
Required sensors/components	Main sensors	Engine coolant temperature sensor, cooling system, thermostat
	Related sensors	Mass air flow sensor
Frequency of operation	Continuous	
Duration	• 20 minutes • 5 minutes • 2 minutes (Depending on ECT at engine start)	
MIL operation	2 driving cycles	
Sequence of operation	None	

TYPICAL ENABLING CONDITIONS

Item	Specification	
	Minimum	Maximum
The monitor will run whenever the following DTCs are not present	See "List of Disable a Monitor" table (On page 05–25)	
Intake air amount per second	0.1 g/sec	–
Fuel cut	OFF	

TYPICAL MALFUNCTION THRESHOLDS

Detection Criteria	Threshold
Time until detected engine coolant temperature (ECT) reaches the closed–loop enabling temperature	(a), (b) or (c)
(a) ECT at engine start is 10°C (50°F) or more	2 minutes or more
(b) ECT at engine start is between –6.7°C (20°F) and 10°C (50°F)	5 minutes or more
(c) ETC at engine start is –6.7°C (20°F) or less	20 minutes or more

WIRING DIAGRAM

Refer to DTC P0115 on page 05–80.

INSPECTION PROCEDURE

HINT:

- If DTCs P0115, P0116, P0117, P0118 and P0125 are output simultaneously, the engine coolant temperature sensor circuit may be open or short. Perform the troubleshooting of DTC P0115, P0117 or P0118 first.
- Read freeze frame data using the hand−held tester or the OBD II scan tool. Freeze frame data records the engine conditions when a malfunction is detected. When troubleshooting, it is useful for determining whether the vehicle was running or stopped, the engine was warmed up or not, the air–fuel ratio was lean or rich, etc. at the time of the malfunction.

1 CHECK OTHER DTC OUTPUT(IN ADDITION TO DTC P0125)

(a) Connect the hand–held tester or the OBD II scan tool to the DLC3.
(b) Turn the ignition switch ON and push the hand–held tester or the OBD II scan tool main switch ON.
(c) Select the item ”DIAGNOSIS / ENHANCED OBD II / DTC INFO / CURRENT CODES”.
(d) Read the DTCs.

Result:

Display (DTC output)	Proceed to
P0125	A
P0125 and other DTCs	B

HINT:

If any other codes besides P0125 are output, perform the troubleshooting for those DTCs first.

B → **GO TO RELEVANT DTC CHART (See page 05–35)**

A

2 INSPECT THERMOSTAT (See page 16–3)

NG → **REPLACE THERMOSTAT (See page 16–11)**

OK

REPLACE ENGINE COOLANT TEMPERATURE SENSOR

DTC	P0128	COOLANT THERMOSTAT (COOLANT TEMPERATURE BELOW THERMOSTAT REGULATING TEMPERATURE)

HINT:
This is the purpose of the ”thermostat” malfunction detection.

CIRCUIT DESCRIPTION

If the engine coolant temperature (ECT) does not reach 75˚C (167˚F) despite sufficient warm – up time has elapsed.

DTC No.	DTC Detection Condition	Trouble Area
P0128	Condition (a), (b) and (c): (a) Cold start (b) After engine is warmed up (c) Engine coolant temperature is less than 75˚C (167˚F)	• Thermostat • Cooling system • Engine coolant temperature sensor • ECM

MONITOR DESCRIPTION

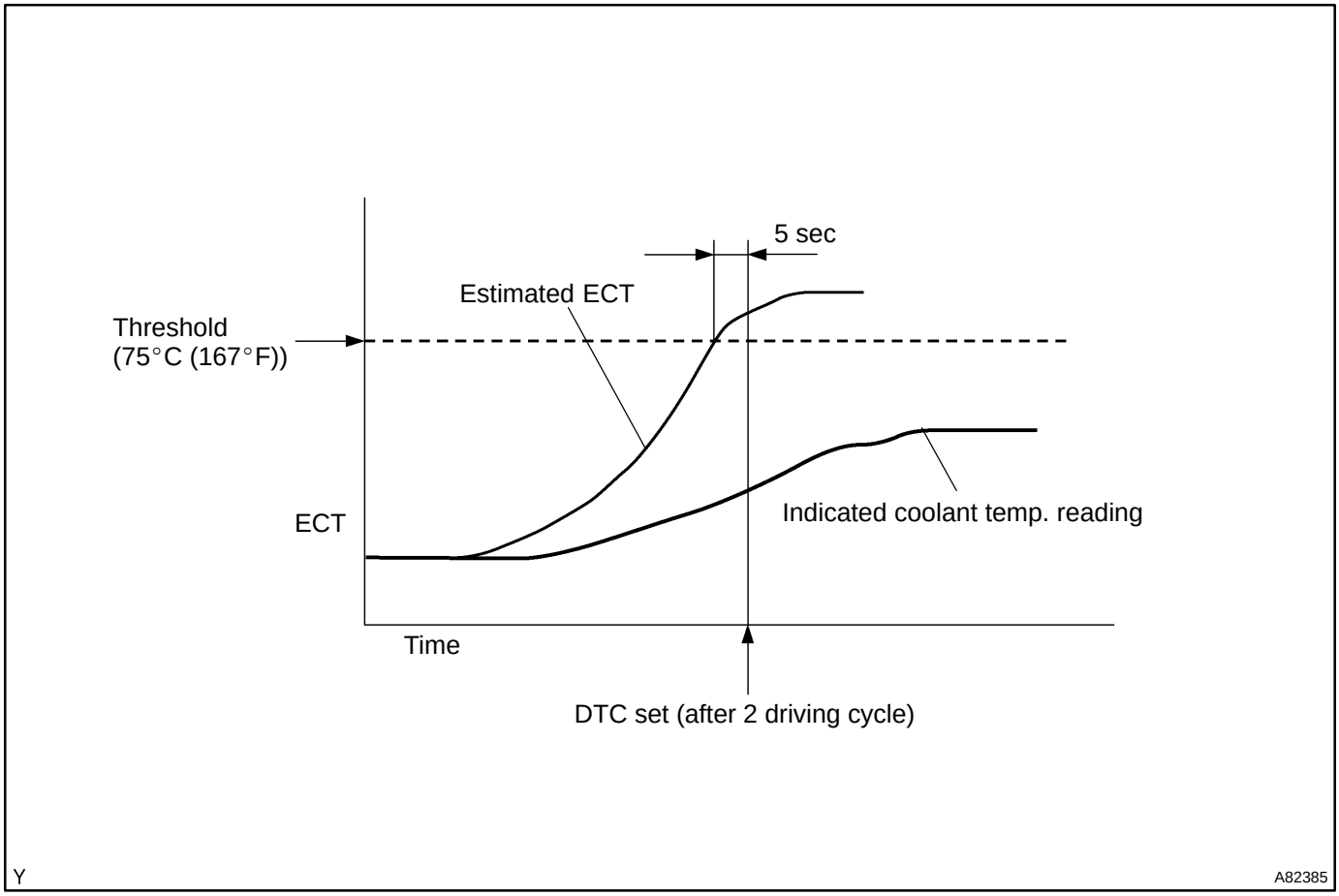

The ECM estimates the engine coolant temperature (ECT) based on starting temperature, engine loads, and engine speeds. The ECM then compares the estimated ECT with the actual ECT. When the estimated ECT reaches 75°C (167°F) the ECM checks the actual ECT. If the actual ECT is less than 75°C (167°F), the ECM will interpret this as a fault in the thermostat or engine cooling system or thermostat and set a DTC.

MONITOR STRATEGY

Related DTCs	P0128	Thermostat
Required sensors/components	Main sensors	Engine coolant temperature sensor, engine cooling system, thermostat
	Related sensors	Intake air temperature sensor, vehicle speed sensor
Frequency of operation	Once per drive cycle	
Duration	15 minutes	
MIL operation	2 driving cycles	
Sequence of operation	None	

TYPICAL ENABLING CONDITIONS

Item	Specification	
	Minimum	Maximum
The monitor will run whenever the following DTCs are not present	See "List of Disable a Monitor" (On page 05–25)	
Battery voltage	11.0 V	–
Intake air temperature (at engine start)	–10°C (14°F)	35°C (95°F)
Engine coolant temperature (at engine start)	–10°C (14°F)	35°C (95°F)
Engine coolant temperature – Intake air temperature (at engine start)	–15°C (–27°F)	7°C (12.6°F)

TYPICAL MALFUNCTION THRESHOLDS

Detection Criteria	Threshold
(1) Estimated engine coolant temperature	75°C (167°F) or more
(2) Engine coolant temperature sensor output value	Less than 75°C (167°F)
Duration period of both (1) and (2)	5 seconds or more

COMPONENT OPERATING RANGE

Parameter	Standard Value
Engine coolant temperature sensor output value after warm–up	75°C (167°F) or more

MONITOR RESULT (MODE 06 DATA)

Test ID	Comp ID	Description of Test Data	Description of Test Limit	Unit	Conversion Factor
$08	$81	Difference between estimated and actual engine coolant temperatures is calculated by ECM. The value stored when estimated coolant temperature =75°C (167°F)	Malfunction criteria for thermostat	Degree C	Multiply by 0.625 and minus 40

Refer to page 05–27 for the detailed information on Checking Monitor Status.

INSPECTION PROCEDURE

HINT:

Read freeze frame data using the hand–held tester or the OBD II scan tool. Freeze frame data records the engine conditions when a malfunction is detected. When troubleshooting, it is useful for determining whether the vehicle was running or stopped, the engine was warmed up or not, the air–fuel ratio was lean or rich, etc. at the time of the malfunction.

1	CHECK COOLING SYSTEM

(a) Check that there is a defect in the cooling system which causes overcool, such as abnormal radiator fan operation, modified cooling system and so on.

NG → REPAIR OR REPLACE COOLING SYSTEM

OK

2	INSPECT THERMOSTAT (See page 16–3)

NG → REPLACE THERMOSTAT (See page 16–11)

OK

3	CHECK OTHER DTC OUTPUT(IN ADDITION TO DTC P0128)

(a) Connect the hand–held tester or the OBD II scan tool to the DLC3.
(b) Turn the ignition switch ON and push the hand–held tester or the OBD II scan tool main switch ON.
(c) Select the item ”DIAGNOSIS / ENHANCED OBD II / DTC INFO / CURRENT CODES”.
(d) Read the DTCs.

Result:

Display (DTC output)	Proceed to
P0128	A
P0128 and other DTCs	B

HINT:
If any other codes besides P0128 is output, perform the troubleshooting for those DTCs first.

B → GO TO RELEVANT DTC CHART (See page 05–35)

A

REPLACE ECM (See page 10–11)

DTC	P0130	OXYGEN SENSOR CIRCUIT MALFUNCTION (BANK 1 SENSOR 1)

DTC	P2195	OXYGEN SENSOR SIGNAL STUCK LEAN (BANK 1 SENSOR 1)

DTC	P2196	OXYGEN SENSOR SIGNAL STUCK RICH (BANK 1 SENSOR 1)

CIRCUIT DESCRIPTION

The rear heated oxygen sensor is used to monitor oxygen concentration in the exhaust gas. For optimum catalytic converter operation, the air fuel mixture must be maintained near the ideal ”stoichiometric” ratio. The heated oxygen sensor output voltage changes suddenly in the vicinity of the stoichiometric ratio. The ECM adjusts the fuel injection time so that the air–fuel ratio is nearly stoichiometric.

When the air–fuel ratio becomes LEAN, the oxygen concentration in the exhaust gas increases. And the heated oxygen sensor informs the ECM of the LEAN condition (low voltage, i.e. less than 0.45 V).

When the air–fuel ratio is RICHER than the stoichiometric air–fuel ratio, the oxygen will be vanished from the exhaust gas. And the heated oxygen sensor informs the ECM of the RICH condition (high voltage, i.e. more than 0.45 V).

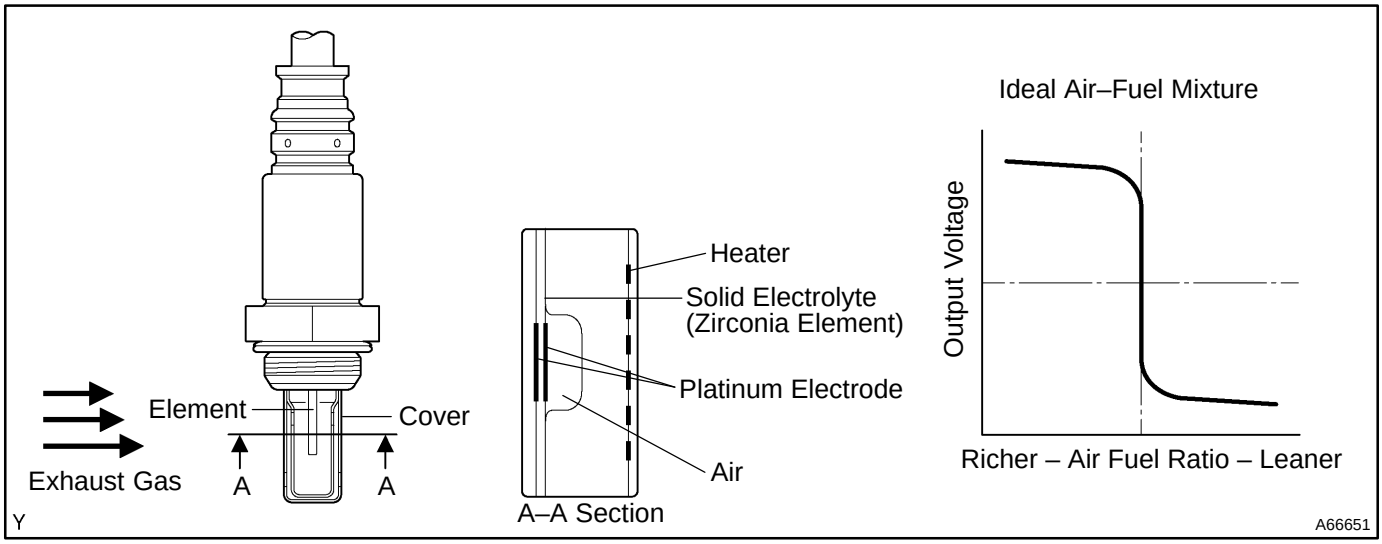

DTC No.	DTC Detection Condition	Trouble Area
P0130	Output voltage of heated oxygen sensor remains at 0.4 V or more, or 0.5 V or less, during idling after engine is warmed up (2 trip detection logic)	• Open or short in heated oxygen sensor (bank 1 sensor 1) circuit • Heated oxygen sensor (bank 1 sensor 1) • Heated oxygen sensor heater (bank 1 sensor 1) • EFI relay • Air induction system • Fuel pressure • Injector • ECM
P2195	Output voltage of heated oxygen sensor remains at 0.5 V or less, during idling after engine is warmed up (2 trip detection logic)	
P2196	Output voltage of heated oxygen sensor remains at 0.4 V or more, during idling after engine is warmed up (2 trip detection logic)	

HINT:

- Sensor 1 refers to the sensor closest to the engine assembly.
- The output voltage of the heated oxygen sensor and the short–term fuel trim value can be read using the hand–held tester or the OBD II scan tool.

MONITOR DESCRIPTION

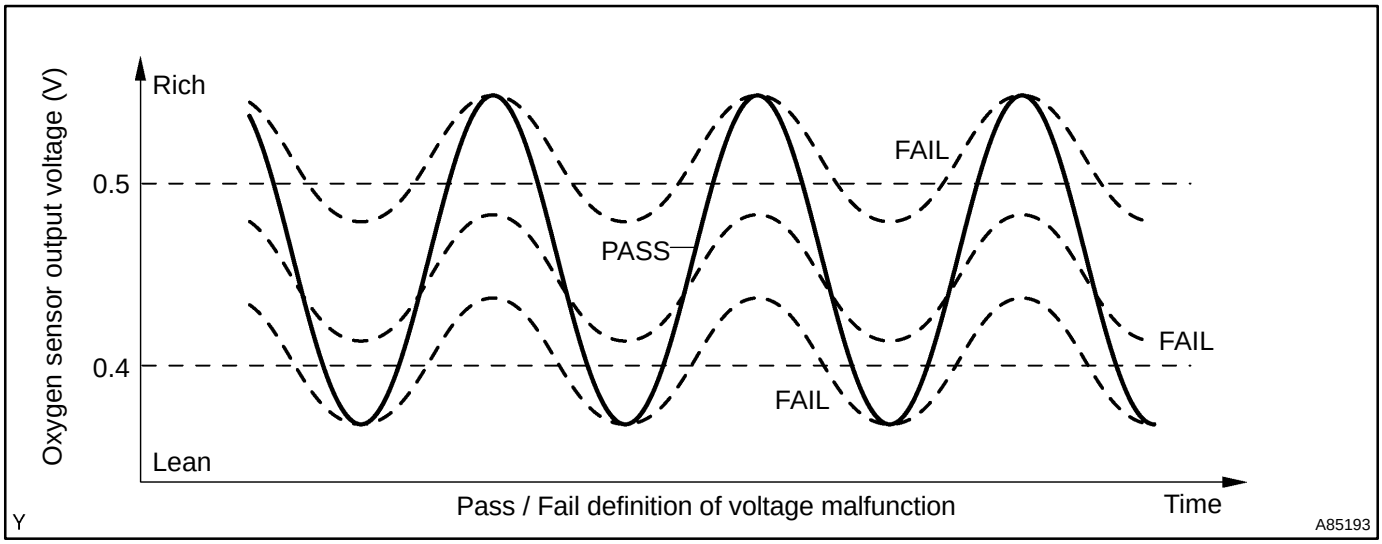

The engine control module (ECM) uses the heated oxygen sensor information to regulate the air–fuel ratio near to the stoichiometric air–fuel ratio. The sensor detects oxygen levels in the exhaust gases and sends this signal to the ECM. This maximizes the catalytic converter's ability to purify the exhaust gases.
The heated oxygen sensor element consists of the platinum coated zirconia and heating element. The inner surface of sensor element is exposed to the outside air, and the outer surface of sensor element is exposed to the exhaust gases. The sensor generates between 0 V and 1 V of the voltage output in response to the oxygen concentration in the exhaust gases. The sensor's output voltage varies suddenly in the vicinity of the stoichiometric air–fuel ratio.
Under normal condition, the output voltage from the heated oxygen sensor alternates between RICH and LEAN sides periodically. When it is 0.4 V or less, the air–fuel ratio is judged as LEAN.
If the heated oxygen sensor outputs RICH signal (or LEAN signal) constantly, or if the heated oxygen sensor cannot output enough voltage to reach the minimum specification, the ECM interprets this as a malfunction in the heated oxygen sensor and sets a DTC.

MONITOR STRATEGY

Related DTCs	P0130	Front heated oxygen sensor voltage is constant
	P2195	Front heated oxygen sensor voltage is constant at lean side
	P2196	Front heated oxygen sensor voltage is constant at rich side
Required sensors/components	Main sensors	Front heated oxygen senor
	Related sensors	Crank shaft position sensor, vehicle speed sensor
Frequency of operation	Once per drive cycles	
Duration	18 to 36 seconds x 3	
MIL operation	2 driving cycles	
Sequence of operation	None	

TYPICAL ENABLING CONDITION

Item	Specification	
	Minimum	Maximum
The monitor will run whenever the following DTCs are not present	See "List of Disable a Monitor" (On page 05–25)	
There is history of following condition (a) and (b) a met:	20 seconds (Continuously)	–
(a) Vehicle speed	25 mph (40 km/h)	–
(b) Engine speed	900 rpm	–
Time after engine start	120 seconds	–
Idle	ON	
Fuel system status	Closed loop	

TYPICAL MALFUNCTION THRESHOLDS

Detection Criteria	Threshold
P0130:	
Sensor voltage is 0.5 V or less for 18 seconds or more	3 times or more
Sensor voltage is 0.4 V or more for 18 seconds or more	
P2195:	
Front heated oxygen sensor voltage is 0.5 V or less for 18 seconds or more	3 times or more
P2196:	
Front heated oxygen sensor voltage is 0.4 V or more for 18 seconds or more	3 times or more

COMPONENT OPERATING RANGE

Parameter	Standard Value
In the normal condition, the heated oxygen sensor voltage	0 to 1 V

MONITOR RESULT (MODE 06 DATA)

Test ID	Comp ID	Description of test data	Description of test limit	Unit	Conversion factor
$03	–	Not supported by mode $06, but by mode $05	–	–	–

Refer to page 05–27 for detailed information on Checking Monitor Status.

WIRING DIAGRAM

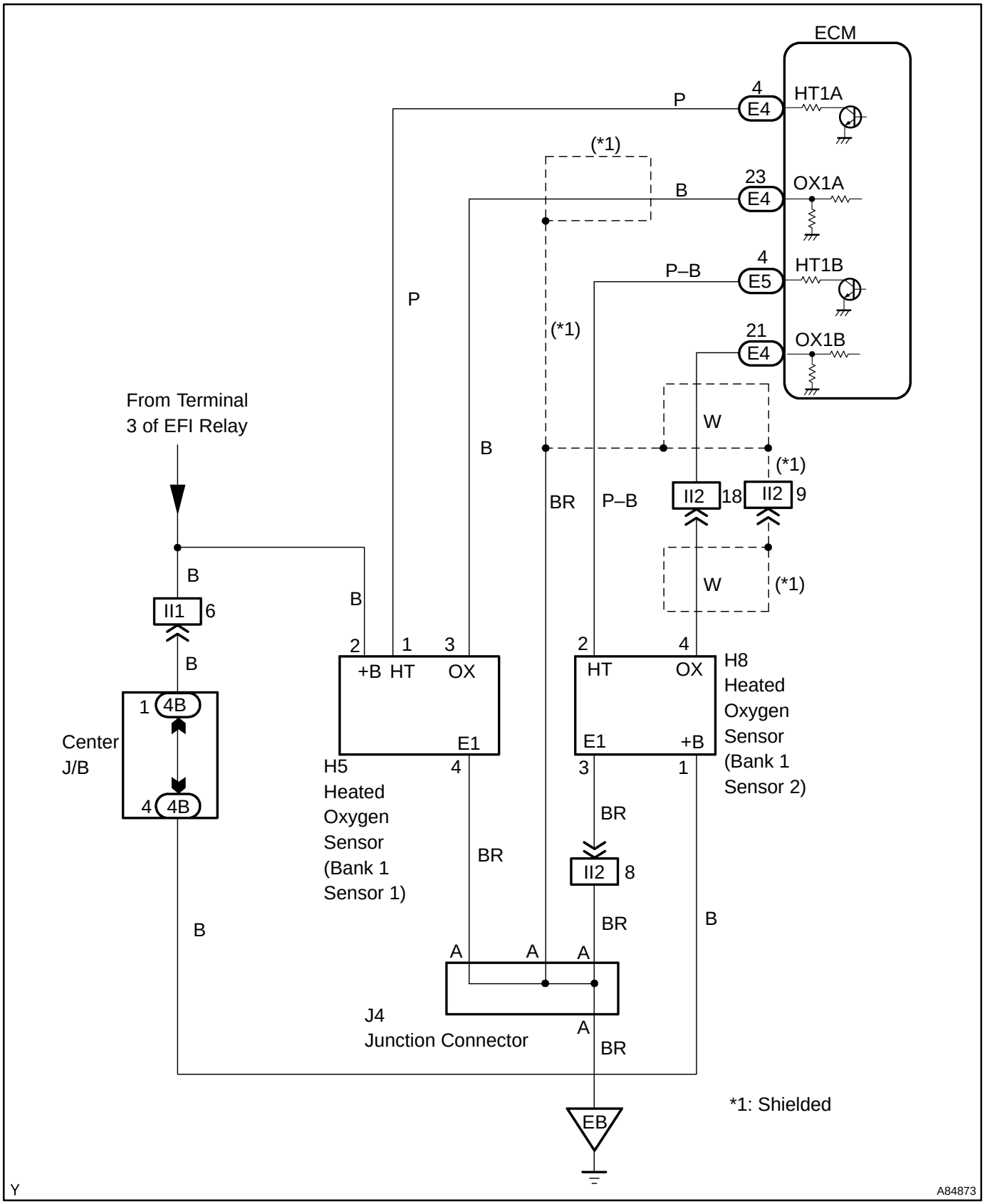

CONFIRMATION DRIVING PATTERN

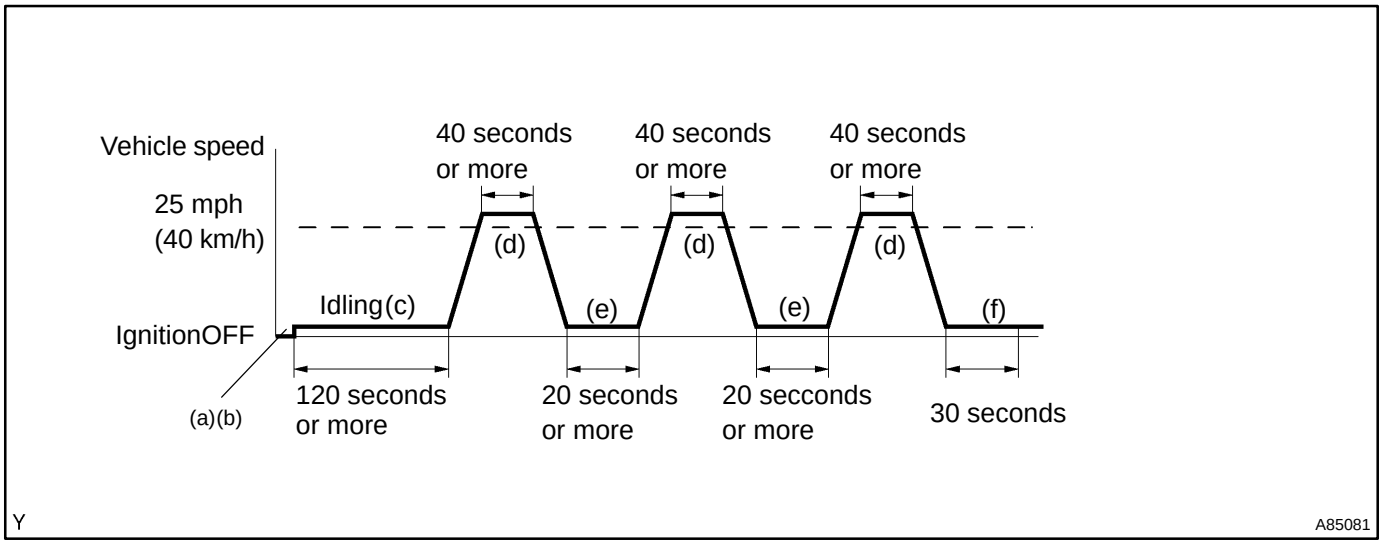

(a) Connect the hand–held tester to the DLC3.
(b) Switch the hand–held tester from the ”normal mode” to the ”check mode” (See page 05–11).
(c) Start the engine and let the engine idle for 120 seconds or more.
(d) Drive the vehicle at 25 mph (40 km/h) or more for 40 seconds or more.
(e) Let the engine idle for 20 seconds or more. Perform steps (d) and (e) at least 3 times.
(f) Let the engine idle for 30 seconds.

HINT:
If a malfunction exists, the MIL will be illuminated on the multi information display during step (f).

NOTICE:
If the conditions in this test are not strictly followed, detection of a malfunction will not occur.
If you do not have the hand–held tester, turn the ignition switch OFF after performing steps from (c) to (f), then perform steps from (c) to (f) again.

INSPECTION PROCEDURE

HINT:
Hand–held tester only:
Narrowing down the trouble area is possible by performing ”A/F CONTROL” ACTIVE TEST (heated oxygen sensor or other trouble areas can be distinguished).

(a) Perform ACTIVE TEST using hand–held tester (A/F CONTROL).

HINT:
”A/F CONTROL” is the ACTIVE TEST which changes the injection volume to –12.5 % or +25 %.

(1) Connect the hand–held tester to the DLC3 on the vehicle.
(2) Turn the ignition switch ON.
(3) Warm up the engine by running the engine speed at 2,500 rpm for approximately 90 seconds.
(4) Select the item ”DIAGNOSIS / ENHANCED OBD II / ACTIVE TEST / A/F CONTROL”.
(5) Perform ”A/F CONTROL” with the engine in an idle condition (press the right or left button).

Result:

Heated oxygen sensor reacts in accordance with increase and decrease of injection volume
+25 % → rich output: More than 0.5 V,
–12.5 % → lean output: Less than 0.4 V

NOTICE:
There is a delay of few seconds in the sensor 1 (front sensor) output, and there is about 20 seconds delay at maximum in the sensor 2 (rear sensor).

	Output voltage of heated oxygen sensor (sensor 1: front sensor)	Output voltage of heated oxygen sensor (sensor 2: rear sensor)	Mainly suspect trouble area
Case 1	Injection volume +25 % –12.5 % 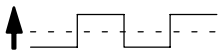 Output voltage More than 0.5 V Less than 0.4 V  **OK**	Injection volume +25 % –12.5 % 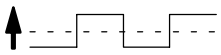 Output voltage More than 0.5 V Less than 0.4 V 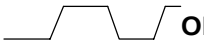 **OK**	—
Case 2	Injection volume +25 % –12.5 % 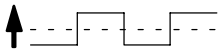 Output voltage No reaction **NG**	Injection volume +25 % –12.5 % 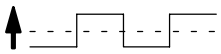 Output voltage More than 0.5 V Less than 0.4 V 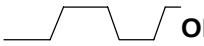 **OK**	Sensor 1: front sensor (sensor 1, heater, sensor 1 circuit)
Case 3	Injection volume +25 % –12.5 % 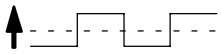 Output voltage More than 0.5 V Less than 0.4 V  **OK**	Injection volume +25 % –12.5 % 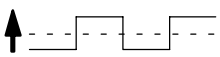 Output voltage No reaction **NG**	Sensor 2: rear sensor (sensor 2, heater, sensor 2 circuit)
Case 4	Injection volume +25 % –12.5 % 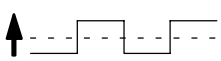 Output voltage No reaction **NG**	Injection volume +25 % –12.5 % 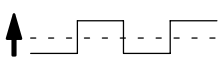 Output voltage No reaction **NG**	Extremely rich or lean actual air–fuel ratio (Injector, fuel pressure, gas leakage in exhaust system, etc.)

The following of A/F CONTROL procedure enables the technician to check and graph the voltage outputs of both the heated oxygen sensors.
For displaying the graph indication, enter ”ACTIVE TEST / A/F CONTROL / USER DATA”, then select ”O2S B1S1 and O2S B1S2” by pressing ”YES” button and push ”ENTER” button before pressing ”F4” button.
NOTICE:
If the vehicle is short of fuel, the air–fuel ratio becomes LEAN and heated oxygen sensor DTCs will be recorded, and the MIL then comes on.
HINT:

- If different DTCs related to different systems that have terminal E2 as the ground terminal are output simultaneously, terminal E2 may be open.
- Read freeze frame data using the hand−held tester or the OBD II scan tool. Freeze frame data records the engine conditions when a malfunction is detected. When troubleshooting, it is useful for determining whether the vehicle was running or stopped, the engine was warmed up or not, the air–fuel ratio was lean or rich, etc. at the time of the malfunction.
- A high heated oxygen sensor (sensor 1) voltage (0.5 V or more) could be caused by a rich air fuel mixture. Check for conditions that would cause the engine to run rich.
- A low heated oxygen sensor (sensor 1) voltage (0.4 V or less) could be caused by a lean air fuel mixture. Check for conditions that would cause the engine to run lean.

1	CHECK OTHER DTC OUTPUT(IN ADDITION TO HEATED OXYGEN SENSOR DTCS)

(a) Connect the hand–held tester or the OBD II scan tool to the DLC3.
(b) Turn the ignition switch ON and push the hand–held tester or the OBD II scan tool main switch ON.
(c) Select the item ”DIAGNOSIS / ENHANCED OBD II / DTC INFO / CURRENT CODES”.
(d) Read the DTCs.
Result:

Display (DTC output)	Proceed to
”P0130, P2195 and/or P2196”	A
”P0130, P2195 and/or P2196” and other DTCs	B

HINT:
If any other codes besides P0130, P2195 and/or P2196 are output, perform the troubleshooting for those DTCs first.

B → **GO TO RELEVANT DTC CHART (See page 05–35)**

A

2	READ VALUE OF HAND–HELD TESTER OR OBD II SCAN TOOL(OUTPUT VOLTAGE OF HEATED OXYGEN SENSOR)

(a) Connect the hand–held tester or the OBD II scan tool to the DLC3.
(b) Start the engine and push the hand–held tester or the OBD II scan tool main switch ON.
(c) Select the item ”DIAGNOSIS / ENHANCED OBD II / DATA LIST / ALL / O2S B1S1”.
(d) Warm up the heated oxygen sensor with the engine speed at 2,500 rpm for approximately 90 seconds.
(e) Read the output voltage of the heated oxygen sensor during idling.
Heated oxygen sensor output voltage:
Alternates repeatedly between less than 0.4 V and more than 0.5 V (See the following table).

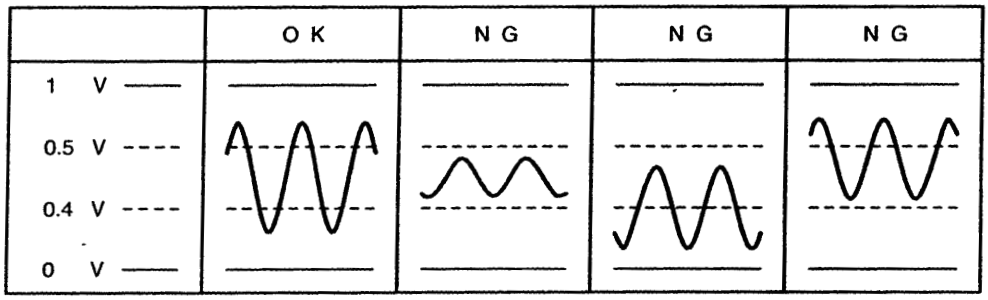

A85076

OK → **Go to step 9**

NG

3 INSPECT HEATED OXYGEN SENSOR(HEATER RESISTANCE)

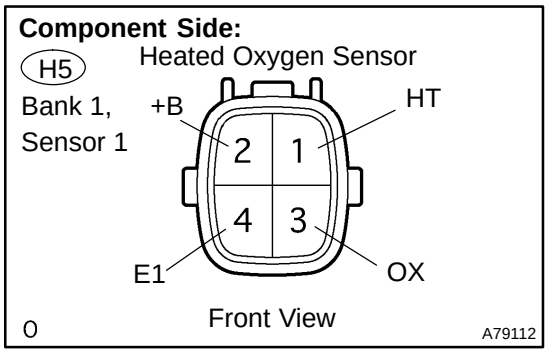

(a) Disconnect the H5 heated oxygen sensor connector.

(b) Measure the resistance between the terminals of the heated oxygen sensor connector.

Standard:

Tester Connection	Specified Condition
HT (H5–1) – +B (H5–2)	5 to 10 Ω at 20 °C (68 °F)
HT (H5–1) – E1 (H5–4)	10 kΩ or higher

(c) Reconnect the heated oxygen sensor connector.

NG → **REPLACE HEATED OXYGEN SENSOR**

OK

4 INSPECT EFI RELAY

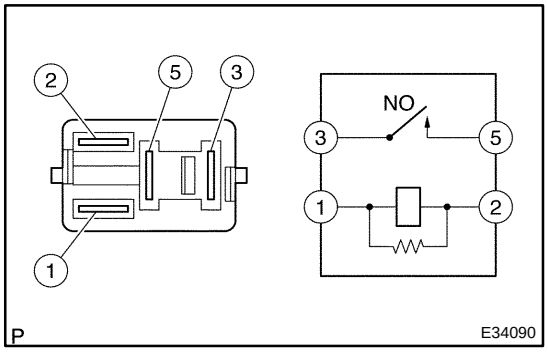

(a) Remove the EFI relay from the engine room R/B.

(b) Check for continuity in the EFI relay.

Standard:

Tester Connection	Specified Condition
1 – 2	Continuity
3 – 5	No continuity
	Continuity (Apply battery voltage to terminals 1 and 2)

(c) Reinstall the EFI relay.

NG → **REPLACE EFI RELAY**

OK

5 CHECK HARNESS AND CONNECTOR(HEATED OXYGEN SENSOR – ECM)

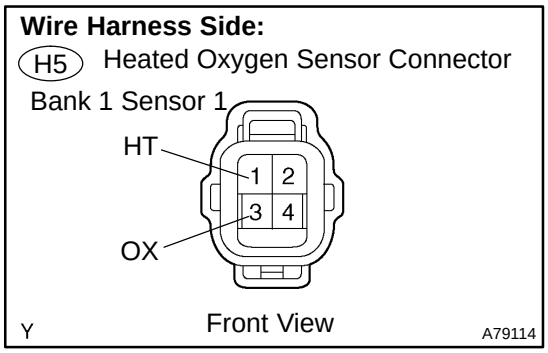

(a) Disconnect the H5 heated oxygen sensor connector.
(b) Disconnect the E4 ECM connector.
(c) Check the resistance between the wire harness side connectors.

Standard (Check for open):

Tester Connection	Specified Condition
HT (H5–1) – HT1A (E4–4)	Below 1 Ω
OX (H5–3) – OX1A (E4–23)	

Standard (Check for short):

Tester Connection	Specified Condition
HT (H5–1) or HT1A (E4–4) – Body ground	10 kΩ or higher
OX (H5–3) or OX1A (E4–23) – Body ground	

(d) Reconnect the ECM connector.
(e) Reconnect the heated oxygen sensor connector.

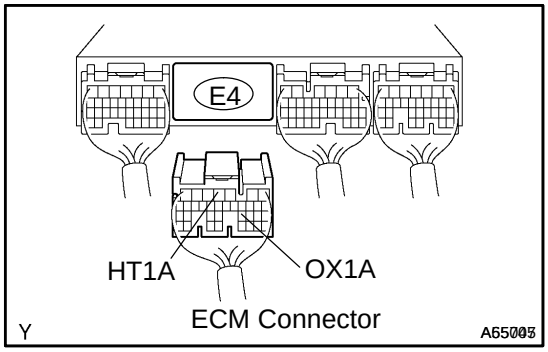

Reference (Bank 1 Sensor 1 System Drawing)

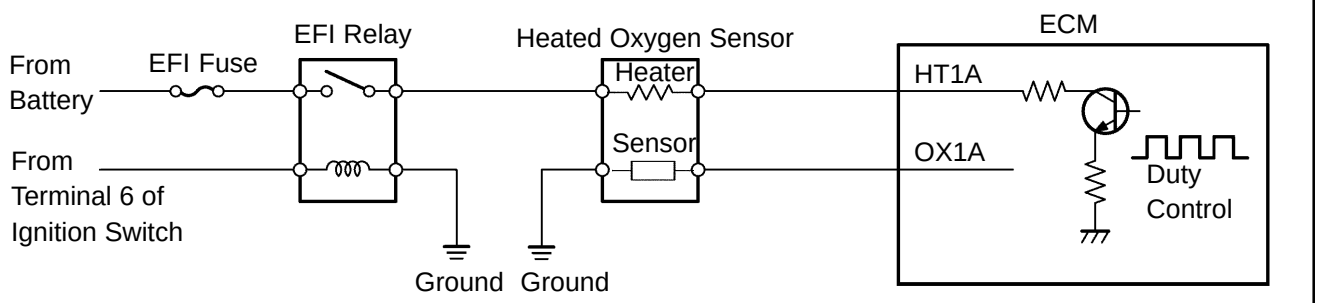

NG → **REPAIR OR REPLACE HARNESS OR CONNECTOR**

OK

6	CHECK AIR INDUCTION SYSTEM

(a) Check the air induction system for vacuum leaks.

NG → REPAIR OR REPLACE AIR INDUCTION SYSTEM

OK

7	CHECK FUEL PRESSURE (See page 11–5)

(a) Check the fuel pressure (high or low pressure).

NG → REPAIR OR REPLACE FUEL SYSTEM

OK

8	INSPECT FUEL INJECTOR ASSY(INJECTION AND VOLUME) (See page 11–7)

NG → REPLACE FUEL INJECTOR ASSY

OK

REPLACE HEATED OXYGEN SENSOR

9	PERFORM CONFIRMATION DRIVING PATTERN

HINT:
Clear all DTCs prior to performing the confirmation driving pattern.

GO

10	READ OUTPUT DTC(HEATED OXYGEN SENSOR DTCS ARE OUTPUT AGAIN)

(a) Connect the hand–held tester or the OBD II scan tool to the DLC3.
(b) Turn the ignition switch ON and push the hand–held tester or the OBD II scan tool main switch ON.
(c) Read the DTC using the hand–held tester or the OBD II scan tool.
Result:

Display (DTC output)	Proceed to
”P0130, P2195 and/or P2196”	A
”P0130, P2195 and/or P2196” are not output	B

B → CHECK FOR INTERMITTENT PROBLEMS (See page 05–41)

A

REPLACE HEATED OXYGEN SENSOR

DTC	P0133	OXYGEN SENSOR CIRCUIT SLOW RESPONSE (BANK 1 SENSOR 1)

CIRCUIT DESCRIPTION

Refer to DTC P0130 on page 05–101.

DTC No.	DTC Detection Condition	Trouble Area
P0133	After engine has been warmed up, if response time that heated oxygen sensor's output voltage reaches from RICH to LEAN. or from LEAN to RICH, is 0.6 second or more during idling. (2 trip detection logic)	• Open or short in heated oxygen sensor (bank 1 sensor 1) circuit • Heated oxygen sensor (bank 1 sensor 1) • Heated oxygen sensor heater (bank 1 sensor 1) • EFI relay • Air induction system • Fuel pressure • Injector • ECM •
	If response time of heated oxygen sensor's output voltage in one RICH–LEAN cycle is 6 seconds or more during idling. (2 trip detection logic)	

HINT:
Sensor 1 refers to the sensor closest to the engine assembly.

MONITOR DESCRIPTION

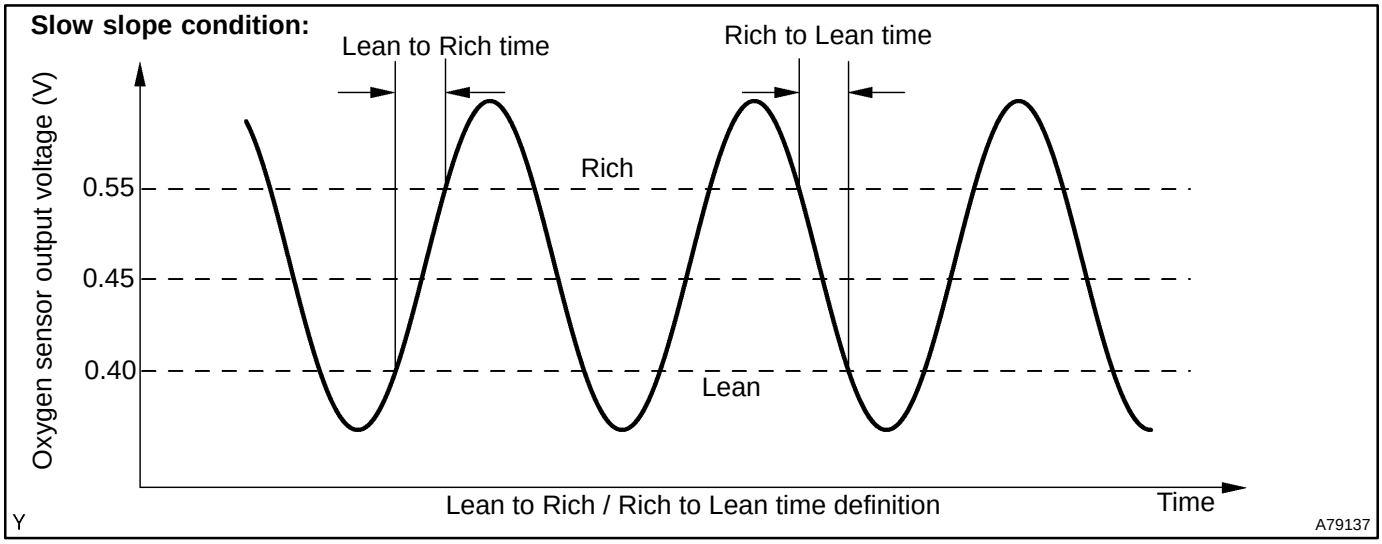

The engine control module (ECM) uses the heated oxygen sensor information to regulate the air–fuel ratio close to a stoichiometric ratio. This maximizes the catalytic converter's ability to purify the exhaust gases. The sensor detects oxygen levels in the exhaust gas and sends this signal to the ECM.
The inner surface of the sensor element is exposed to the outside air. The outer surface of the sensor element is exposed to the exhaust gas. The sensor element is made of the platinum coated zirconia and includes an integrated heating element. The heated oxygen sensor has the characteristic whereby its output voltage change suddenly in the vicinity of the stoichiometric air–fuel ratio. The heated oxygen sensor generates waveform of a voltage between 0 V and 1 V in response to the oxygen concentration in exhaust gas. When the output voltage of the heated oxygen sensor is 0.55 V or more, the ECM judges that the air–fuel ratio is RICH. When it is 0.40 V or less, the ECM judges that the air–fuel ratio is LEAN.
The ECM monitors the response feature of the heated oxygen sensor. If the response time of the sensor output status change from RICH to LEAN or vice versa becomes longer, the ECM interprets this as a malfunction in the heated oxygen sensor and sets a DTC.

Frequency condition:

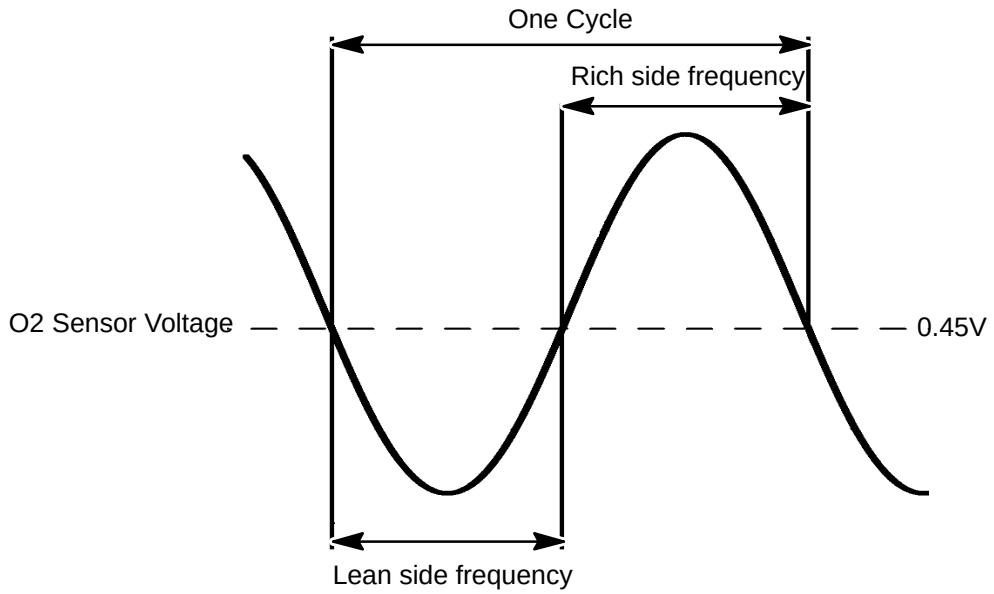

MONITOR STRATEGY

Related DTCs	P0133	Front heated oxygen sensor response monitor
Required sensors/components	Main sensors	Front heated oxygen sensor
	Related sensors	Crank shaft position sensor, vehicle speed sensor, mass air flow sensor
Frequency of operation	Once per drive cycles	
Duration	Within 60 seconds	
MIL operation	2 driving cycles	
Sequence of operation	None	

TYPICAL ENABLING CONDITION

Item	Specification	
	Minimum	Maximum
The monitor will run whenever the following DTCs are not present	See "List of Disable a Monitor" (On page 05–25)	
Frequency idle condition:		
There is a history that the following condition (a) and (b) were met for 20seconds		
(a) Vehicle speed	25 mph (40 km/h)	–
(b) Engine speed	900 rpm	–
Time after engine start	120 seconds	–
Idle	ON	
Vehicle speed	–	3 mph (5 km/h)
Fuel system status	Closed loop	
Engine coolant temperature	40°C (104°F)	–
Frequency cruise condition:		
There is a history that the following condition (a) and (b) were met for 20seconds		
(a) Vehicle speed	25 mph (40 km/h)	–
(b) Engine speed	900 rpm	–
Intake air amount	5 g/s	14.5 g/s
Time after engine start	120 sec	–
Idle	OFF	
Fuel system status	Closed loop	

Engine speed	1,000 rpm	3,500 rpm
Engine coolant temperature	70°C (104°F)	–
Slow slope condition:		
There is a history that the following condition (a) and (b) were met for 20seconds		
(a) Vehicle speed	25 mph (40 km/h)	–
(b) Engine speed	900 rpm	–
Time after engine start	120 seconds	–
Idle	ON	
Vehicle speed	–	3 mph (5 km/h)
Fuel system status	Closed loop	
Engine coolant temperature	40°C (104°F)	–

TYPICAL MALFUNCTION THRESHOLDS

Detection Criteria	Threshold
Frequency idle condition	
Time required by the voltage output to change in one cycle	w/ AT: 6 sec or more w/ MT: 5.5 sec or more
Frequency cruise condition	
Time required by the voltage output to change in one cycle	a specific time or more
Slow slope condition	
Time that output voltage of front heated oxygen sensor increase from 0.4V to 0.55V and drops from 0.55V to 0.4V	0.6 seconds or more

COMPONENT OPERATING RANGE

Parameter	Standard Value
Voltage output of the front heated oxygen sensor fluctuates between 0.40 V and 0.5 V in an instant.	

WIRING DIAGRAM

Refer to DTC P0130 on page 05–101.

INSPECTION PROCEDURE

HINT:

Hand–held tester only:

Narrowing down the trouble area is possible by performing ”A/F CONTROL” ACTIVE TEST (heated oxygen sensor or other trouble areas can be distinguished). Perform ACTIVE TEST using hand–held tester (A/F CONTROL).

(a) Perform ACTIVE TEST using the hand–held tester (A/F CONTROL).

HINT:

”A/F CONTROL” is the ACTIVE TEST which changes the injection volume to –12.5 % or +25 %.

(1) Connect the hand–held tester to the DLC3 on the vehicle.
(2) Turn the ignition switch ON.
(3) Warm up the engine by running the engine speed at 2,500 rpm for approximately 90 seconds.
(4) Select the item ”DIAGNOSIS / ENHANCED OBD II / ACTIVE TEST / A/F CONTROL”.
(5) Perform ”A/F CONTROL” with the engine in an idle condition (press the right or left button).

Result:

Heated oxygen sensor reacts in accordance with increase and decrease of injection volume
+25 % → rich output: More than 0.5 V,
–12.5 % → lean output: Less than 0.4 V

NOTICE:

There is a delay of few seconds in the sensor 1 (front sensor) output, and there is about 20 seconds delay at maximum in the sensor 2 (rear sensor)

	Output voltage of heated oxygen sensor (sensor 1: front sensor)	Output voltage of heated oxygen sensor (sensor 2: rear sensor)	Mainly suspect trouble area
Case 1	Injection volume +25 % –12.5 % Output voltage More than 0.5 V Less than 0.4V **OK**	Injection volume +25 % –12.5 % Output voltage More than 0.5 V Less than 0.4V **OK**	—
Case 2	Injection volume +25 % –12.5 % Output voltage No reaction **NG**	Injection volume +25 % –12.5 % Output voltage More than 0.5 V Less than 0.4V **OK**	Sensor 1: front sensor (sensor 1, heater, sensor 1 circuit)
Case 3	Injection volume +25 % –12.5 % Output voltage More than 0.5 V Less than 0.4V **OK**	Injection volume +25 % –12.5 % Output voltage No reaction **NG**	Sensor 2: rear sensor (sensor 2, heater, sensor 2 circuit)
Case 4	Injection volume +25 % –12.5 % Output voltage No reaction **NG**	Injection volume +25 % –12.5 % Output voltage No reaction **NG**	Extremely rich or lean actual air–fuel ratio (Injector, fuel pressure, gas leakage in exhaust system, etc.)

The following of A/F CONTROL procedure enables the technician to check and graph the voltage outputs of both the heated oxygen sensors.
For displaying the graph indication, enter ”ACTIVE TEST / A/F CONTROL / USER DATA”, then select ”O2S B1S1 and O2S B1S2” by pressing ”YES” button and push ”ENTER” button before pressing ”F4” button.

NOTICE:

If the vehicle is short of fuel, the air–fuel ratio becomes LEAN and DTC P0133 will be recorded, and the MIL then comes on.

HINT:

- If different DTCs related to different systems that have terminal E2 as the ground terminal are output simultaneously, terminal E2 may be open.
- Read freeze frame data using the hand−held tester or the OBD II scan tool. Freeze frame data records the engine conditions when a malfunction is detected. When troubleshooting, it is useful for determining whether the vehicle was running or stopped, the engine was warmed up or not, the air–fuel ratio was lean or rich, etc. at the time of the malfunction.
- A high heated oxygen sensor (sensor 1) voltage (0.5 V or more) could be caused by a rich air fuel mixture. Check for conditions that would cause the engine to run rich.
- A low heated oxygen sensor (sensor 1) voltage (0.4 V or less) could be caused by a lean air fuel mixture. Check for conditions that would cause the engine to run lean.

1	CHECK OTHER DTC OUTPUT(IN ADDITION TO DTC P0133)

(a) Connect the hand–held tester or the OBD II scan tool to the DLC3.
(b) Turn the ignition switch ON and push the hand–held tester or the OBD II scan tool main switch ON.
(c) Read the DTCs using the hand–held tester or the OBD II scan tool.
Result:

Display (DTC output)	Proceed to
P0133	A
P0133 and other DTCs	B

HINT:
If any other codes besides P0133 are output, perform the troubleshooting for those DTCs first.

B → **GO TO RELEVANT DTC CHART (See page 05–35)**

A

2	READ VALUE OF HAND–HELD TESTER OR OBD II SCAN TOOL(HEATED OXYGEN SENSOR DURING IDLING)

(a) Connect the hand–held tester or the OBD II scan tool to the DLC3.
(b) Start the engine and push the hand–held tester or the OBD II scan tool main switch ON.
(c) Select the item ”DIAGNOSIS / ENHANCED OBD II / DATA LIST / ALL / O2S B1S1”.
(d) Warm up the heated oxygen sensor with the engine speed at 2,500 rpm for approximately 90 seconds.
(e) Read the output voltage of the heated oxygen sensor during idling.
Heated oxygen sensor output voltage:
Alternates between less than 0.35 V and more than 0.45 V, and period of ”t” must exist less than 0.6 sec. (See the following table).

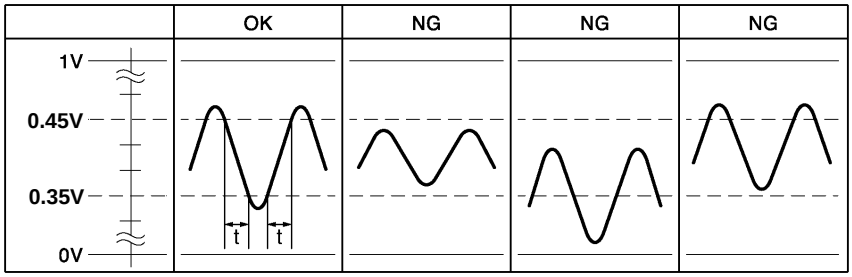

N A85082

OK → **Go to step 9**

NG

3	INSPECT HEATED OXYGEN SENSOR(HEATER RESISTANCE)

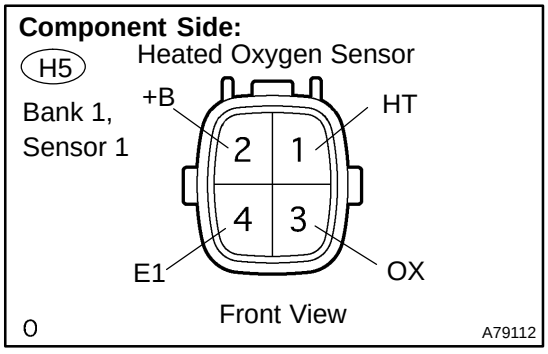

(a) Disconnect the H5 heated oxygen sensor connector.
(b) Measure the resistance between the terminals of the heated oxygen sensor connector.
Standard:

Tester Connection	Specified Condition
HT (H5–1) – +B (H5–2)	5 to 10 Ω at 20 °C (68 °F)
HT (H5–1) – E1 (H5–4)	10 kΩ or higher

(c) Reconnect the heated oxygen sensor connector.

NG → **REPLACE HEATED OXYGEN SENSOR**

OK

4 INSPECT EFI RELAY

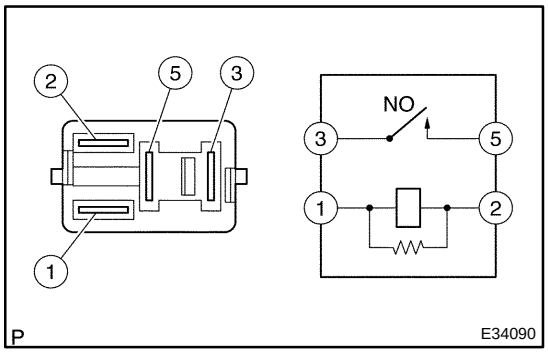

(a) Remove the EFI relay from the engine room R/B.

(b) Check for continuity in the EFI relay.

Standard:

Tester Connection	Specified Condition
1 – 2	Continuity
3 – 5	No continuity
	Continuity (Apply battery voltage to terminals 1 and 2)

(c) Reinstall the EFI relay.

NG → **REPLACE EFI RELAY**

OK

5 CHECK HARNESS AND CONNECTOR(HEATED OXYGEN SENSOR – ECM)

Wire Harness Side:

H5 Heated Oxygen Sensor Connector

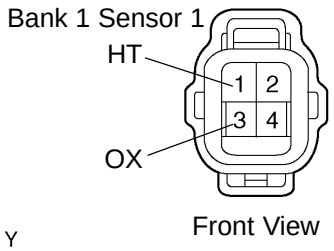

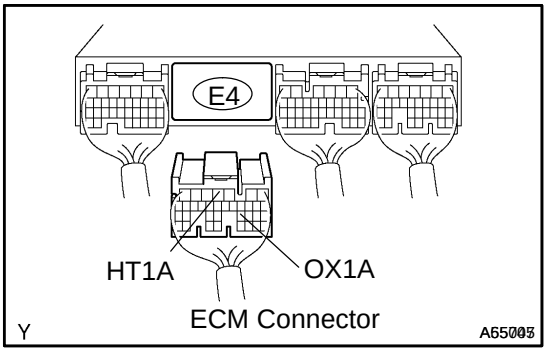

(a) Disconnect the H5 heated oxygen sensor connector.

(b) Disconnect the E4 ECM connector.

(c) Check the resistance between the wire harness side connectors.

Standard (Check for open):

Tester Connection	Specified Condition
HT (H5–1) – HT1A (E4–4)	Below 1 Ω
OX (H5–3) – OX1A (E4–23)	

Standard (Check for short):

Tester Connection	Specified Condition
HT (H5–1) or HT1A (E4–4) – Body ground	10 kΩ or higher
OX (H5–3) or OX1A (E4–23) – Body ground	

(d) Reconnect the ECM connector.

(e) Reconnect the heated oxygen sensor connector.

Reference (Bank 1 Sensor 1 System Drawing):

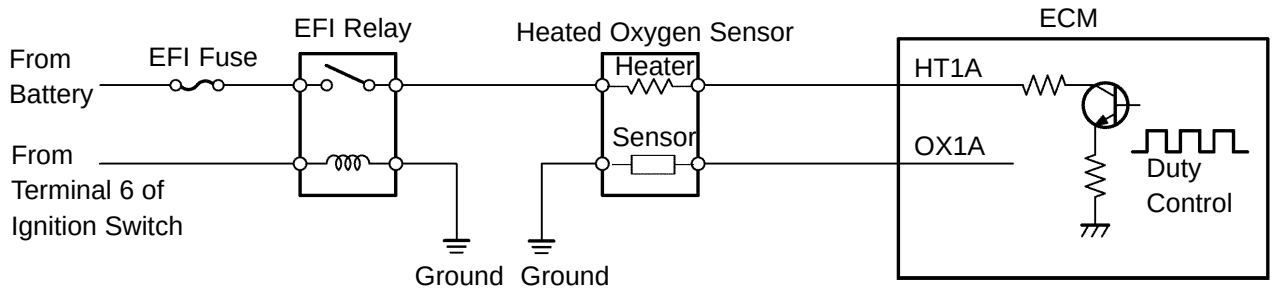

NG → **REPAIR OR REPLACE HARNESS OR CONNECTOR**

OK →

6	CHECK AIR INDUCTION SYSTEM

(a) Check the air induction system for vacuum leaks.

NG → REPAIR OR REPLACE AIR INDUCTION SYSTEM

OK

7	CHECK FUEL PRESSURE (See page 11–5)

(a) Check the fuel pressure (high or low pressure).

NG → REPAIR OR REPLACE FUEL SYSTEM

OK

8	INSPECT FUEL INJECTOR ASSY(INJECTION AND VOLUME) (See page 11–7)

NG → REPLACE FUEL INJECTOR ASSY

OK

REPLACE HEATED OXYGEN SENSOR

9	PERFORM CONFIRMATION DRIVING PATTERN (See page 05–101)

HINT:
Clear all DTCs prior to performing the confirmation driving pattern.

GO

10	READ OUTPUT DTC(DTC P0133 IS OUTPUT AGAIN)

(a) Connect the hand–held tester or the OBD II scan tool to the DLC3.
(b) Turn the ignition switch ON and push the hand–held tester or the OBD II scan tool main switch ON.
(c) Read the DTCs using the hand–held tester or the OBD II scan tool.
Result:

Display (DTC output)	Proceed to
P0133	A
No output	B

B → CHECK FOR INTERMITTENT PROBLEMS (See page 05–41)

A

REPLACE HEATED OXYGEN SENSOR

DTC	P0134	OXYGEN SENSOR CIRCUIT NO ACTIVITY DETECTED (BANK 1 SENSOR 1)

CIRCUIT DESCRIPTION

Refer to DTC P0130 on page 05–101.

DTC No.	DTC Detecting Condition	Trouble Area
P0134	After engine is warmed up, heated oxygen sensor (bank 1 sensor 1) output does not indicate RICH (greater than 0.45 V) even once when conditions (a), (b), (c), (d) and (e) continue for more than 65 seconds (1 trip detection logic) : (a) Engine speed: 1,400 rpm or more (b) Vehicle speed: 24.8 mph (40 km/h) or more (c) Throttle valve is not fully closed (d) 180 seconds or more after starting engine (e) Engine coolant temperature is more than 40 °C (104 °F)	• Open or short in heated oxygen sensor (bank 1 sensor 1) circuit • Heated oxygen sensor (bank 1 sensor 1) • Heated oxygen sensor heater (bank 1 sensor 1) • EFI relay • Air induction system • Fuel pressure • PCV hose connection • PCV valve and hose • Injector • Gas leakage in exhaust system • PCV piping • ECM

HINT:
After confirming DTC P0134, check the output voltage of the heated oxygen sensor (bank 1 sensor 1) in the ”DIAGNOSIS / ENHANCED OBD II / DATA LIST / ALL” using the hand−held tester or the OBD II scan tool. If the output voltage of the heated oxygen sensor is always less than 0.1 V, the sensor circuit may be open or short.

MONITOR DESCRIPTION

The ECM uses the heated oxygen sensor to optimize the air–fuel mixture in the closed–loop fuel control. This control helps decrease exhaust emissions by providing the catalyst with a nearly stoichiometric mixture. The sensor detects the oxygen level in the exhaust gas and the ECM uses this data to control the air–fuel ratio. The sensor output voltage ranges from 0 V to 1 V. If the signal voltage is less than 0.4 V, the air–fuel ratio is LEAN. If the signal voltage is more than 0.5 V, the air–fuel ratio is RICH. If the sensor does not indicate RICH even once despite the conditions for the closed–loop fuel control being met and a specified time period has passed, the ECM will conclude that the closed–loop fuel control is malfunctioning. The ECM will illuminate the MIL and a DTC is set.

MONITOR STRATEGY

Related DTCs	P0134	Excessive time to enter closed loop
Required sensors/components	Main sensors	Front heated oxygen sensor
	Related sensors	Crank shaft position sensor, engine coolant temperature sensor, vehicle speed sensor
Frequency of operation	Once per drive cycles	
Duration	65 seconds	
MIL operation	1 driving cycles	
Sequence of operation	None	

TYPICAL ENABLING CONDITION

Item	Specification	
	Minimum	Maximum
The monitor will run whenever the following DTCs are not present	See "List of Disable a Monitor" (On page 05–25)	
Time after following conditions are met:	50 seconds	–
Engine coolant temperature	40°C	–
Engine speed	1,400 rpm	–
Vehicle speed	25 mph (40 km/h)	–
Idle	OFF	
Time after engine start	180 seconds	–

TYPICAL MALFUNCTION THRESHOLDS

Detection Criteria	Threshold
Front heated oxygen sensor voltage	less than 0.45 V

COMPONENT OPERATING RANGE

Parameter	Standard Value
In the normal condition, the font heated oxygen sensor voltage	0 to 1 V

WIRING DIAGRAM

Refer to DTC P0130 on page 05–101.

INSPECTION PROCEDURE

HINT:

Hand–held tester only:

Narrowing down the trouble area is possible by performing "A/F CONTROL" ACTIVE TEST (heated oxygen sensor or other trouble areas can be distinguished).

(a) Perform ACTIVE TEST using hand–held tester (A/F CONTROL).

HINT:

"A/F CONTROL" is the ACTIVE TEST which changes the injection volume to –12.5 % or +25 %.

(1) Connect the hand–held tester to the DLC3 on the vehicle.
(2) Turn the ignition switch ON.
(3) Warm up the engine by running the engine speed at 2,500 rpm for approximately 90 seconds.
(4) Select the item "DIAGNOSIS / ENHANCED OBD II / ACTIVE TEST / A/F CONTROL".
(5) Perform "A/F CONTROL" with the engine in an idle condition (press the right or left button).

Result:

Heated oxygen sensor reacts in accordance with increase and decrease of injection volume
+25 % → rich output: More than 0.5 V,
–12.5 % → lean output: Less than 0.4 V

NOTICE:
There is a delay of few seconds in the sensor 1 (front sensor) output, and there is about 20 seconds delay at maximum in the sensor 2 (rear sensor).

	Output voltage of heated oxygen sensor (sensor 1: front sensor)	Output voltage of heated oxygen sensor (sensor 2: rear sensor)	Mainly suspect trouble area
Case 1	Injection volume +25 % –12.5 % 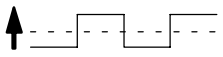 Output voltage More than 0.5 V Less than 0.4V  **OK**	Injection volume +25 % –12.5 % 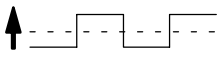 Output voltage More than 0.5 V Less than 0.4V 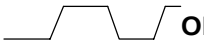 **OK**	—
Case 2	Injection volume +25 % –12.5 % 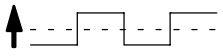 Output voltage No reaction **NG**	Injection volume +25 % –12.5 % 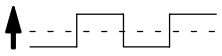 Output voltage More than 0.5 V Less than 0.4V 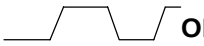 **OK**	Sensor 1: front sensor (sensor 1, heater, sensor 1 circuit)
Case 3	Injection volume +25 % –12.5 % 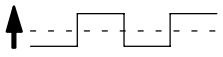 Output voltage More than 0.5 V Less than 0.4V  **OK**	Injection volume +25 % –12.5 % 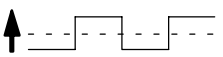 Output voltage No reaction **NG**	Sensor 2: rear sensor (sensor 2, heater, sensor 2 circuit)
Case 4	Injection volume +25 % –12.5 % 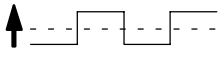 Output voltage No reaction **NG**	Injection volume +25 % –12.5 % 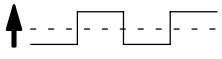 Output voltage No reaction **NG**	Extremely rich or lean actual air–fuel ratio (Injector, fuel pressure, gas leakage in exhaust system, etc.)

The following of A/F CONTROL procedure enables the technician to check and graph the voltage outputs of both the heated oxygen sensors.
For displaying the graph indication, enter ”ACTIVE TEST / A/F CONTROL / USER DATA”, then select ”O2S B1S1 and O2S B1S2” by pressing ”YES” button and push ”ENTER” button before pressing ”F4” button.
HINT:

- If different DTCs related to different systems that have terminal E2 as the ground terminal are output simultaneously, terminal E2 may be open.
- Read freeze frame data using the hand−held tester or the OBD II scan tool. Freeze frame data records the engine conditions when a malfunction is detected. When troubleshooting, it is useful for determining whether the vehicle was running or stopped, the engine was warmed up or not, the air–fuel ratio was lean or rich, etc. at the time of the malfunction.
- A high heated oxygen sensor (sensor 1) voltage (0.5 V or more) could be caused by a rich air fuel mixture. Check for conditions that would cause the engine to run rich.
- A low heated oxygen sensor (sensor 1) voltage (0.4 V or less) could be caused by a lean air fuel mixture. Check for conditions that would cause the engine to run lean.

1	CHECK OTHER DTC OUTPUT(IN ADDITION TO DTC P0134)

(a) Connect the hand–held tester or the OBD II scan tool to the DLC3.
(b) Turn the ignition switch ON and push the hand–held tester or the OBD II scan tool main switch ON.
(c) Select the item ”DIAGNOSIS / ENHANCED OBD II / DTC INFO / CURRENT CODES”.
(d) Read the DTCs.

Result:

Display (DTC output)	Proceed to
P0134	A
P0134 and other DTCs	B

HINT:
If any other codes besides P0134 are output, perform the troubleshooting for those DTCs first.

B → **GO TO RELEVANT DTC CHART (See page 05–35)**

A

2	READ VALUE OF HAND–HELD TESTER OR OBD II SCAN TOOL(OUTPUT VOLTAGE OF HEATED OXYGEN SENSOR)

(a) Connect the hand–held tester or the OBD II scan tool to the DLC3.
(b) Turn the ignition switch ON and push the hand–held tester or the OBD II scan tool main switch ON.
(c) Select the item ”DIAGNOSIS / ENHANCED OBD II / DATA LIST / ALL / O2S B1S1”.
(d) Warm up the engine to the normal operating temperature above 75°C (169°F).
(e) Read the output voltage of the heated oxygen sensor when the engine speed is suddenly increased.

HINT:
Quickly accelerate the engine to 4,000 rpm 3 times by using the accelerator pedal.

Standard:
Heated oxygen sensor outputs a RICH signal (0.45 V or more) at least once.

OK → **Go to step 12**

NG

3	CHECK CONNECTION OF PCV HOSE

NG → **REPAIR OR REPLACE PCV HOSE**

OK

4 INSPECT HEATED OXYGEN SENSOR(HEATER RESISTANCE)

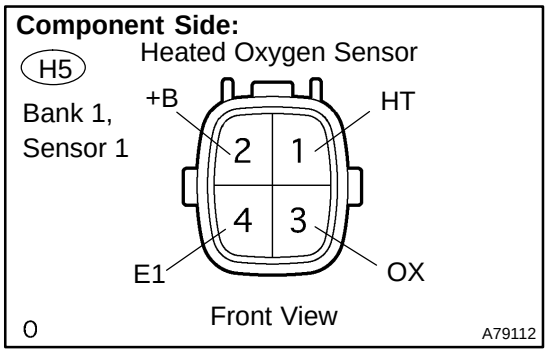

(a) Disconnect the H5 heated oxygen sensor connector.
(b) Measure the resistance between the terminals of the heated oxygen sensor connector.

Standard:

Tester Connection	Specified Condition
HT (H5–1) – +B (H5–2)	5 to 10 Ω at 20 °C (68 °F)
HT (H5–1) – E1 (H5–4)	10 kΩ or higher

(c) Reconnect the heated oxygen sensor connector.

NG → **REPLACE HEATED OXYGEN SENSOR**

OK

5 INSPECT EFI RELAY

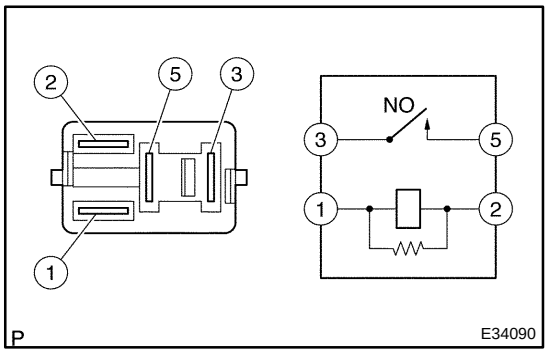

(a) Remove the EFI relay from the engine room R/B.
(b) Check for continuity in the EFI relay.

Standard:

Tester Connection	Specified Condition
1 – 2	Continuity
3 – 5	No continuity
	Continuity (Apply battery voltage to terminals 1 and 2)

(c) Install the EFI relay.

NG → **REPLACE EFI RELAY**

OK

6	CHECK HARNESS AND CONNECTOR(HEATED OXYGEN SENSOR – ECM)

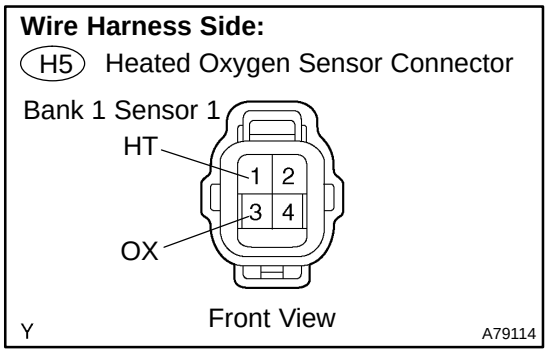

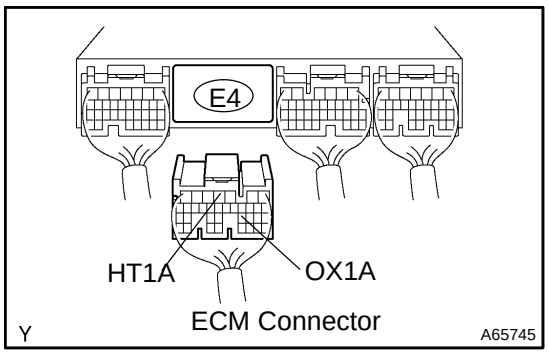

(a) Disconnect the H5 heated oxygen sensor connector.
(b) Disconnect the E4 ECM connector.
(c) Check the resistance between the wire harness side connectors.

Standard (Check for open):

Tester Connection	Specified Condition
HT (H5–1) – HT1A (E4–4)	Below 1 Ω
OX (H5–3) – OX1A (E4–23)	

Standard (Check for short):

Tester Connection	Specified Condition
HT (H5–1) or HT1A (E4–4) – Body ground	10 kΩ or higher
OX (H5–3) or– OX1A (E4–23) – Body ground	

(d) Reconnect the ECM connector.
(e) Reconnect the heated oxygen sensor connector.

Reference (Bank 1 Sensor 1 System Drawing):

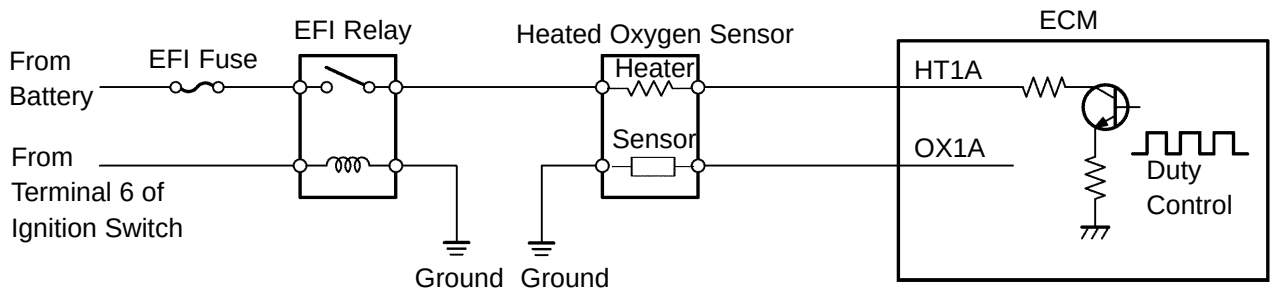

NG → **REPAIR OR REPLACE HARNESS OR CONNECTOR**

OK

7	CHECK WHETHER MISFIRE IS OCCURRED OR NOT BY MONITORING DTC AND DATA LIST

NG → **PERFORM TROUBLESHOOTING FOR MISFIRE (See page 05–149)**

OK

8	CHECK AIR INDUCTION SYSTEM

(a) Check the air induction system for vacuum leaks.

NG → REPAIR OR REPLACE AIR INDUCTION SYSTEM

OK

9	CHECK FUEL PRESSURE (See page 11–5)

(a) Check the fuel pressure (high or low pressure).

NG → REPAIR OR REPLACE FUEL SYSTEM

OK

10	INSPECT FUEL INJECTOR ASSY(INJECTION AND VOLUME) (See page 11–7)

NG → REPLACE FUEL INJECTOR ASSY

OK

11	CHECK FOR EXHAUST GAS LEAKS

NG → REPAIR OR REPLACE EXHAUST GAS LEAKAGE POINT

OK

REPLACE HEATED OXYGEN SENSOR

12	PERFORM CONFIRMATION DRIVING PATTERN (See page 05–101)

HINT:
Clear all DTCs prior to performing the confirmation pattern.

GO

13	READ OUTPUT DTC(DTC P0134 IS OUTPUT AGAIN)

(a) Connect the hand–held tester or the OBD II scan tool to the DLC3.
(b) Turn the ignition switch ON and push the hand–held tester or the OBD II scan tool main switch ON.
(c) Select the item ”DIAGNOSIS / ENHANCED OBD II / DTC INFO / CURRENT CODES”.
(d) Read the DTCs.
Result:

Display (DTC output)	Proceed to
No output	A
P0134	B

B → REPLACE ECM (See page 10–11)

A

14	CONFIRM IF VEHICLE HAS RUN OUT OF FUEL IN PAST

NO → CHECK FOR INTERMITTENT PROBLEMS (See page 05–41)

YES

DTC IS CAUSED BY RUNNING OUT OF FUEL

DTC	P0136	OXYGEN SENSOR CIRCUIT MALFUNCTION (BANK 1 SENSOR 2)

CIRCUIT DESCRIPTION

Refer to DTC P0130 on page 05–101.

DTC No	DTC Detection Condition	Trouble Area
P0136	The following condition (a) or (b) continues for 300 seconds or more: (a) During driving with the engine warmed up, heated oxygen sensor output does not change. (b) Heated oxygen sensor output is very low most of the time.	• Open or short in heated oxygen sensor (bank 1 sensor 2) circuit • Heated oxygen sensor (bank 1 sensor 2) • Heated oxygen sensor heater (bank 1 sensor 2) • EFI relay

HINT:
Sensor 2 refers to the sensor farthest away from the engine assembly.

MONITOR DESCRIPTION

The heated oxygen sensor generates waveform of a voltage between 0 V and 1 V in response to the oxygen concentration in the exhaust gases. When the output voltage of the heated oxygen sensor is 0.5 V or more, the ECM judges that the air–fuel ratio is RICH. When it is 0.40 V or less, the ECM judges that the air–fuel ratio is LEAN.
If the rear heated oxygen sensor output dose not change between RICH and LEAN during ”Stop and GO” driving, the ECM interprets this as a malfunction in the rear heated oxygen sensor and sets a DTC. Also, if the sensor output remains at less than 0.05 V for more than 156 seconds when ECM monitored the heated oxygen sensor for 260 seconds while the air fuel feedback is being performed (the detecting condition differs depending on the type of vehicles), the ECM will interpret this as a fault. In either case, the ECM will turn on the MIL and set a DTC.

MONITOR STRATEGY

Related DTCs	P0136	Heated oxygen sensor output voltage (bank 1)
Required sensors/components	Main sensors	Rear heated oxygen sensor
	Related sensors	Mass air flow sensor, vehicle speed sensor
Frequency of operation	Once per drive cycles	
Duration	300 seconds	
MIL operation	2 driving cycles	
Sequence of operation	None	

TYPICAL ENABLING CONDITIONS

Item	Specification	
	Minimum	Maximum
The monitor will run whenever the following DTCs are not present	See "List of Disable a Monitor" (On page 05–25)	
Case 1:		
Vehicle speed	2 mph (3 km/h)	–
Idle	OFF	
Fuel cut	OFF	
Time after fuel cut ON to OFF	5 seconds	–
Intake air amount per revolution	0.3 g/rev (AT) 0.22 g/rev (MT)	–
Case 2 (Output voltage):		
Time while the following conditions A and B are met	290 seconds (Engine coolant temperature is less than 75°C (167°F)) 240 seconds (Engine coolant temperature is 75°C (167°F) or more)	–
A. Fuel system status	Closed–loop	
B. Idle	OFF	
Deceleration count (The number of times accelerating and decelerating)	30 times	–
Deceleration is counted up when vehicle decelerates	3 mph (5 km/h) / 2 seconds	–

TYPICAL MALFUNCTION THRESHOLDS

Detection Criteria	Threshold
Case 1:	
Following conditions are met:	1, 2 and 3
1. Cumulative heated oxygen sensor monitor time	260 seconds or more (AT) 190 seconds or more (MT)
2. Time while heated oxygen sensor voltage is less than 0.05V	156 seconds or more (AT) 114 seconds or more (MT)
3. Maximum heated oxygen sensor rich time (0.45V or more)	Less than 20 seconds
Case 2:	
Number of heated oxygen sensor voltage "switching"	0 times or less
"Switching" is counted when the sensor signal crosses the minimum or maximum voltage	
Minimum voltage	0.4 V or less
Maximum voltage	0.5 V or more

COMPONENT OPERATING RANGE

Parameter	Standard Value
Heated oxygen sensor voltage	0 to 1 V

MONITOR RESULT (MODE 06 DATA)

Test ID	Comp ID	Description of test data	Description of test limit	Unit	Conversion factor
$03	–	Not supported by mode $06, but by mode $05	–	–	–

Refer to page 05–27 for detailed information on Checking Monitor Status.

WIRING DIAGRAM

Refer to DTC P0130 on page 05–101.

CONFIRMATION DRIVING PATTERN

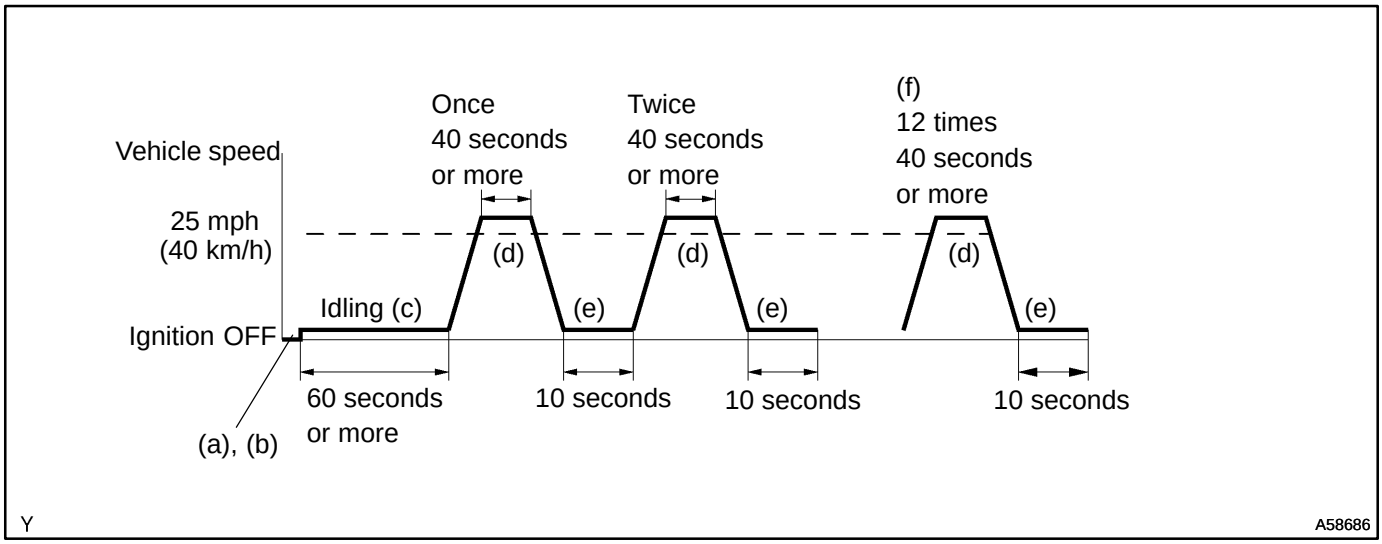

(a) Connect the hand–held tester to the DLC3.
(b) Switch the hand–held tester from the normal mode to the check mode (See page 05–11).
(c) Start the engine and let it idle for 60 seconds or more.
(d) Drive the vehicle at 25 mph (40 km/h) or more for 40 seconds or more.
(e) Let the engine idle for 10 seconds or more.
(f) Perform steps (d) and (e) 12 times.

HINT:

If a malfunction exists, the MIL will be illuminated on the multi information display during step (f).

NOTICE:

If the conditions in this test are not strictly followed, a malfunction detection will not occur. If you do not have a hand–held tester, turn the ignition switch OFF after performing steps from (c) to (f), then perform steps from (c) to (f) again.

INSPECTION PROCEDURE

HINT:

Hand–held tester only:

Narrowing down the trouble area is possible by performing ”A/F CONTROL” ACTIVE TEST (heated oxygen sensor or other trouble areas can be distinguished).

(a) Perform ACTIVE TEST using hand–held tester (A/F CONTROL).

HINT:

”A/F CONTROL” is the ACTIVE TEST which changes the injection volume to –12.5 % or +25 %.

(1) Connect the hand–held tester to the DLC3 on the vehicle.
(2) Turn the ignition switch ON.
(3) Warm up the engine by running the engine speed at 2,500 rpm for approximately 90 seconds.
(4) Select the item ”DIAGNOSIS / ENHANCED OBD II / ACTIVE TEST / A/F CONTROL”.
(5) Perform ”A/F CONTROL” with the engine in an idle condition (press the right or left button).

Result:

Heated oxygen sensor reacts in accordance with increase and decrease of injection volume
+25 % → rich output: More than 0.5 V,
–12.5 % → lean output: Less than 0.4 V

NOTICE:

There is a delay of few seconds in the sensor 1 (front sensor) output, and there is about 20 seconds delay at maximum in the sensor 2 (rear sensor).

	Output voltage of heated oxygen sensor (sensor 1: front sensor)	Output voltage of heated oxygen sensor (sensor 2: rear sensor)	Mainly suspect trouble area
Case 1	Injection volume +25 % –12.5 % Output voltage More than 0.5 V Less than 0.4V **OK**	Injection volume +25 % –12.5 % Output voltage More than 0.5 V Less than 0.4V **OK**	—
Case 2	Injection volume +25 % –12.5 % Output voltage No reaction **NG**	Injection volume +25 % –12.5 % Output voltage More than 0.5 V Less than 0.4V **OK**	Sensor 1: front sensor (sensor 1, heater, sensor 1 circuit)
Case 3	Injection volume +25 % –12.5 % Output voltage More than 0.5 V Less than 0.4V **OK**	Injection volume +25 % –12.5 % Output voltage No reaction **NG**	Sensor 2: rear sensor (sensor 2, heater, sensor 2 circuit)
Case 4	Injection volume +25 % –12.5 % Output voltage No reaction **NG**	Injection volume +25 % –12.5 % Output voltage No reaction **NG**	Extremely rich or lean actual air–fuel ratio (Injector, fuel pressure, gas leakage in exhaust system, etc.)

The following of A/F CONTROL procedure enables the technician to check and graph the voltage outputs of both the heated oxygen sensors.
For displaying the graph indication, enter ”ACTIVE TEST / A/F CONTROL / USER DATA”, then select ”O2S B1S1 and O2S B1S2” by pressing ”YES” button and push ”ENTER” button before pressing ”F4” button.
HINT:

- If different DTCs related to different systems that have terminal E2 as the ground terminal are output simultaneously, terminal E2 may be open.
- Read freeze frame data using the hand–held tester or the OBD II scan tool. Freeze frame data records the engine conditions when a malfunction is detected. When troubleshooting, it is useful for determining whether the vehicle was running or stopped, the engine was warmed up or not, the air–fuel ratio was lean or rich, etc. at the time of the malfunction.

1	CHECK OTHER DTC OUTPUT(IN ADDITION TO DTC P0136)

(a) Connect the hand–held tester or the OBD II scan tool to the DLC3.
(b) Turn the ignition switch ON and push the hand–held tester or the OBD II scan tool main switch ON.
(c) Select the item ”DIAGNOSIS / ENHANCED OBD II / DTC INFO / CURRENT CODES”.
(d) Read the DTCs.
Result:

Display (DTC output)	Proceed to
P0136	A
P0136 and other DTCs	B

HINT:
If any other codes besides P0136 are output, perform the troubleshooting for those DTCs first.

B → **GO TO RELEVANT DTC CHART (See page 05–35)**

A

2	READ VALUE OF HAND–HELD TESTER OR OBD II SCAN TOOL(OUTPUT VOLTAGE OF HEATED OXYGEN SENSOR)

(a) Connect the hand–held tester or the OBD II scan tool to the DLC3.
(b) Start the engine and push the hand–held tester or the OBD II scan tool main switch ON.
(c) Select the item ”DIAGNOSIS / ENHANCED OBD II / DATA LIST / ALL / O2S B1S2”.
(d) After warming up the engine, run the engine at 2,500 rpm for 3 minutes.
(e) Read the output voltage of the heated oxygen sensor (sensor 2) when the engine rpm is suddenly increased.

HINT:
Quickly accelerate the engine to 4,000 rpm 3 times by using the accelerator pedal.
Standard:
The output voltage of heated oxygen sensor (sensor 2): Alternates from 0.4 V or less to 0.5 V or more.

OK → **Go to step 6**

NG

3 INSPECT HEATED OXYGEN SENSOR(HEATER RESISTANCE)

Component Side:

H8 Heated Oxygen Sensor

Bank 1, Sensor 2

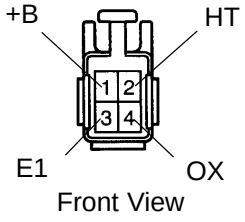

A84555

(a) Disconnect the H8 heated oxygen sensor connector.
(b) Measure the resistance between the terminals of the heated oxygen sensor connector.

Standard:

Tester Connection	Specified Condition
HT (H8–2) – +B (H8–1)	5 to 10 Ω at 20 °C (68 °F)
HT (H8–2) – E1 (H8–3)	10 kΩ or higher

(c) Reconnect the heated oxygen sensor connector.

NG → **REPLACE HEATED OXYGEN SENSOR**

OK

4 INSPECT EFI RELAY

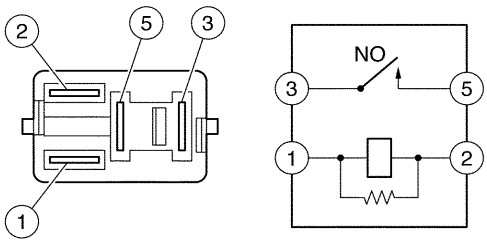

E34090

(a) Remove the EFI relay from the engine room R/B.
(b) Check for continuity in the EFI relay.

Standard:

Tester Connection	Specified Condition
1 – 2	Continuity
3 – 5	No continuity
	Continuity (Apply battery voltage to terminals 1 and 2)

(c) ReInstall the EFI relay.

NG → **REPLACE EFI RELAY**

OK

5	CHECK HARNESS AND CONNECTOR(HEATED OXYGEN SENSOR – ECM)

Wire Harness Side:

H8 Heated Oxygen Sensor Connector

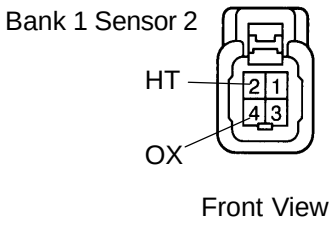

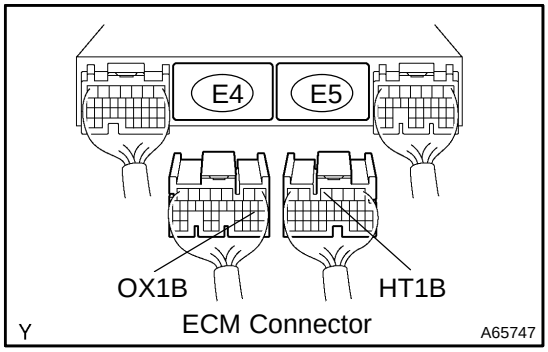

(a) Disconnect the H8 heated oxygen sensor connector.
(b) Disconnect the E4 and E5 ECM connector.
(c) Check the resistance between the wire harness side connectors.

Standard (Check for open):

Tester Connection	Specified Condition
HT (H8–2) – HT1B (E5–4)	Below 1 Ω
OX (H8–4) – OX1B (E4–21)	

Standard (Check for short):

Tester Connection	Specified Condition
HT (H8–2) or HT1B (E5–4) – Body ground	10 kΩ or higher
OX (H8–4) or OX1B (E4–21) – Body ground	

(d) Reconnect the ECM connector.
(e) Reconnect the heated oxygen sensor connector.

Reference (Bank 1 Sensor 2 System Drawing):

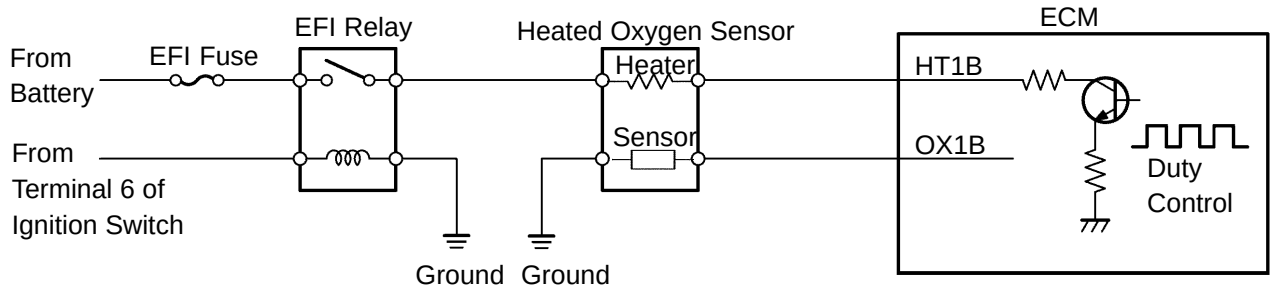

NG → **REPAIR OR REPLACE HARNESS OR CONNECTOR**

OK →

REPLACE HEATED OXYGEN SENSOR

6	PERFORM CONFIRMATION DRIVING PATTERN

HINT:
Clear all DTCs prior to performing the confirmation driving pattern.

GO

7	READ OUTPUT DTC(DTC P0136 IS OUTPUT AGAIN)

(a) Connect the hand–held tester or the OBD II scan tool to the DLC3.
(b) Turn the ignition switch ON and push the hand–held tester or the OBD II scan tool main switch ON.
(c) Select the item ”DIAGNOSIS / ENHANCED OBD II / DTC INFO / CURRENT CODES”.
(d) Read the DTCs.
Result:

Display (DTC output)	Proceed to
P0136	A
No output	B

B → **CHECK FOR INTERMITTENT PROBLEMS (See page 05–41)**

A

REPLACE HEATED OXYGEN SENSOR

DTC	P0171	SYSTEM TOO LEAN (BANK 1)

DTC	P0172	SYSTEM TOO RICH (BANK 1)

CIRCUIT DESCRIPTION

The fuel trim is related to the feedback compensation value, not to the basic injection time. The fuel trim includes the short–term fuel trim and the long–term fuel trim.

The short–term fuel trim is the short–term fuel compensation used to maintain the air–fuel ratio at stoichiometric air–fuel ratio. The signal from the heated oxygen sensor indicates whether the air–fuel ratio is RICH or LEAN compared to the stoichiometric air–fuel ratio. This variance triggers a reduction in the fuel volume if the air–fuel ratio is RICH, and an increase in the fuel volume if it is LEAN.

The long–term fuel trim is the overall fuel compensation carried out in long–term to compensate for a continual deviation of the short–term fuel trim from the central value, due to individual engine differences, wear overtime and changes in the operating environment.

If both the short–term fuel trim and the long–term fuel trim are LEAN or RICH beyond a certain value, it is detected as a malfunction and the MIL is illuminated.

DTC No.	DTC Detection Condition	Trouble Area
P0171	When air–fuel ratio feedback is stable after warming up engine, fuel trim is considerably in error on LEAN side (2 trip detection logic)	• Air induction system • Injector blockage • Mass air flow sensor • Engine coolant temperature sensor • Fuel pressure • Gas leakage in exhaust system • Open or short in heated oxygen sensor (bank 1, sensor 1) circuit • Heated oxygen sensor (bank 1, sensor 1) • Heated oxygen sensor heater (bank 1, sensor 1) • EFI relay • PCV valve and hose • PCV hose connection • ECM
P0172	When air–fuel ratio feedback is stable after warming up engine, fuel trim is considerably in error on RICH side (2 trip detection logic)	• Injector leak, blockage • Mass air flow sensor • Engine coolant temperature sensor • Ignition system • Fuel pressure • Gas leakage in exhaust system • Open or short in heated oxygen sensor (bank 1, sensor 1) circuit • Heated oxygen sensor (bank 1, sensor 1) • Heated oxygen sensor heater (bank 1, sensor 1) • EFI relay • ECM

HINT:

- When DTC P0171 is recorded, the actual air–fuel ratio is on the LEAN side. When DTC P0172 is recorded, the actual air–fuel ratio is on the RICH side.
- If the vehicle runs out of fuel, the air–fuel ratio is LEAN and DTC P0171 may be recorded. The MIL then comes on.
- If the total of the short–term fuel trim value and long–term fuel trim value is within ± 35 % (engine coolant temperature is more than 75 °C (167°F)), the system is functioning normally.

MONITOR DESCRIPTION

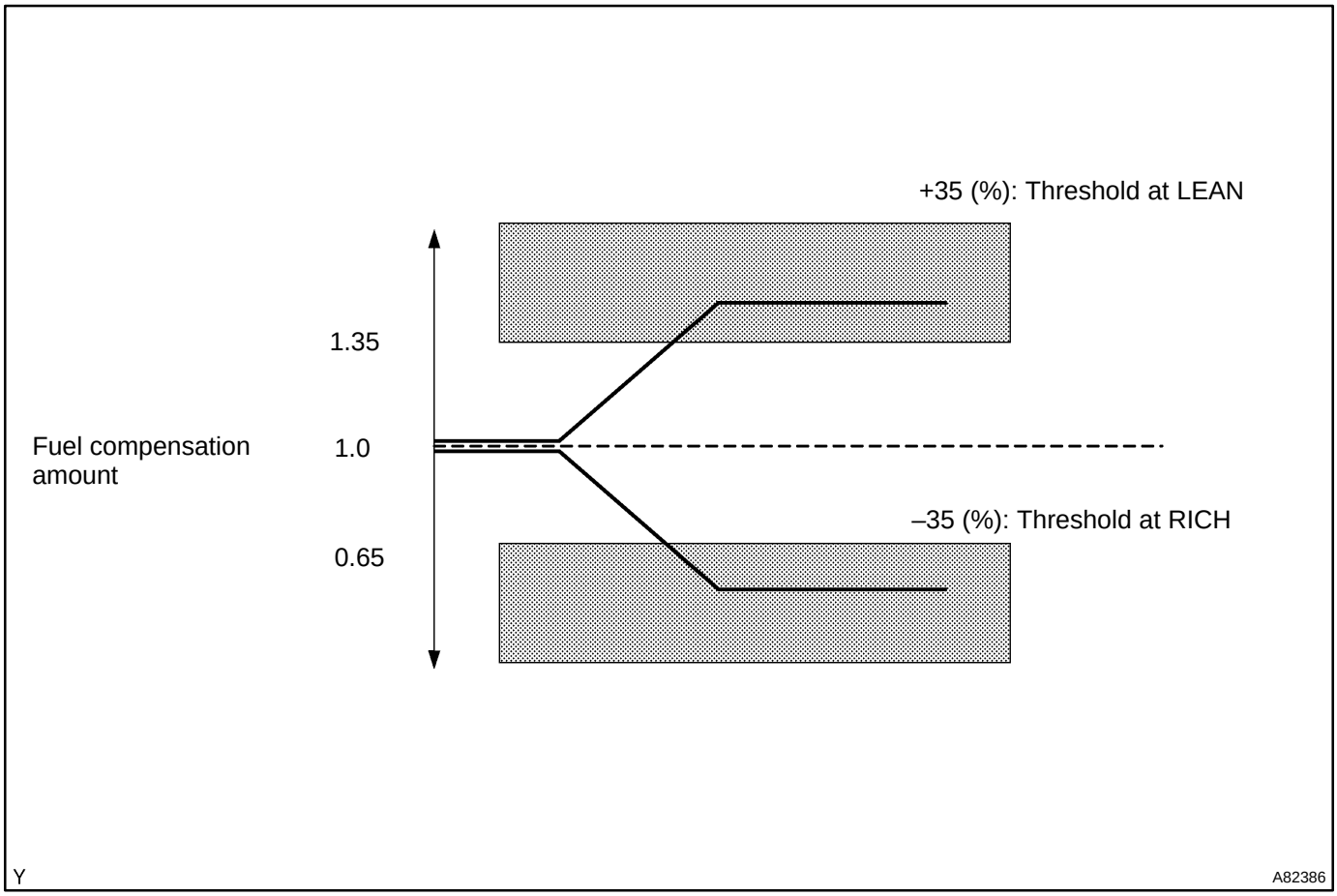

Under the closed–loop fuel control, fuel injection amounts that deviate from the ECM's estimated fuel amount will cause a change in the long–term fuel trim compensation value. This long–term fuel trim is adjusted when there are persistent deviations in the short–term fuel trim values. And the deviation from a simulated fuel injection amount by the ECM affects a smoothed fuel trim learning value which is the combination of smoothed short–term fuel trim (fuel feedback compensation value) and smoothed long–term fuel trim (learning value of the air–fuel ratio). When the smoothed fuel trim learning value exceeds the DTC threshold, the ECM interprets this as a fault in the fuel system and sets a DTC.
Example:
The smoothed fuel trim leaning value is more than +35% or less than –35%, the ECM interprets this as a fail in the fuel system.

MONITOR STRATEGY

Related DTCs	P0171	Fuel system lean (bank 1)
	P0172	Fuel system rich (bank 1)
Required sensors/components	Main sensors	Heated oxygen sensor
	Related sensors	Engine coolant temperature sensor, mass air flow sensor, crankshaft position sensor
Frequency of operation	Continuous	
Duration	10 seconds	
MIL operation	2 driving cycles	
Sequence of operation	None	

TYPICAL ENABLING CONDITIONS

Item	Specification	
	Minimum	Maximum
The monitor will run whenever the following DTCs are not present	See "List of Disable a Monitor" (On page 05–25)	
Battery voltage	11 V	–
Fuel system: Closed loop	13 seconds	–
One of the following condition is met:	(a) or (b)	
(a) Engine speed	–	1,100 rpm
(b) Intake air amount per revolution	0.14 g/rev	–

TYPICAL MALFUNCTION THRESHOLDS

Detection Criteria	Threshold
Following condition is continue for 3 seconds ("a" or "b")	
(a) Smoothed fuel trim learning value (lean)	35 % or more
(b) Smoothed fuel trim learning value (rich)	–35 % or less

WIRING DIAGRAM

Refer to DTC P0130 on page 05–101.

INSPECTION PROCEDURE

HINT:

Hand–held tester only:

Narrowing down the trouble area is possible by performing "A/F CONTROL" ACTIVE TEST (heated oxygen sensor or other trouble areas can be distinguished).

(a) Perform ACTIVE TEST using hand–held tester (A/F CONTROL).

HINT:

"A/F CONTROL" is the ACTIVE TEST which changes the injection volume to –12.5 % or +25 %.

(1) Connect the hand–held tester to the DLC3 on the vehicle.

(2) Turn the ignition switch ON.

(3) Warm up the engine by running the engine speed at 2,500 rpm for approximately 90 seconds.

(4) Select the item "DIAGNOSIS / ENHANCED OBD II / ACTIVE TEST / A/F CONTROL".

(5) Perform "A/F CONTROL" with the engine in an idle condition (press the right or left button).

Result:

Heated oxygen sensor reacts in accordance with increase and decrease of injection volume
+25 % → rich output: More than 0.5 V,
–12.5 % → lean output: Less than 0.4 V

NOTICE:
There is a delay of few seconds in the sensor 1 (front sensor) output, and there is about 20 seconds delay at maximum in the sensor 2 (rear sensor).

	Output voltage of heated oxygen sensor (sensor 1: front sensor)	Output voltage of heated oxygen sensor (sensor 2: rear sensor)	Mainly suspect trouble area
Case 1	Injection volume +25 % –12.5 % 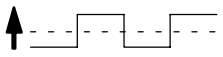 Output voltage More than 0.5 V Less than 0.4V  **OK**	Injection volume +25 % –12.5 % 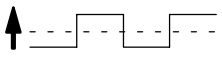 Output voltage More than 0.5 V Less than 0.4V 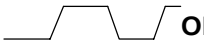 **OK**	—
Case 2	Injection volume +25 % –12.5 % 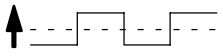 Output voltage No reaction **NG**	Injection volume +25 % –12.5 % 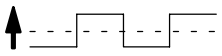 Output voltage More than 0.5 V Less than 0.4V 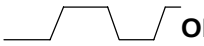 **OK**	Sensor 1: front sensor (sensor 1, heater, sensor 1 circuit)
Case 3	Injection volume +25 % –12.5 % 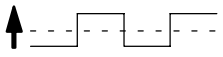 Output voltage More than 0.5 V Less than 0.4V  **OK**	Injection volume +25 % –12.5 % 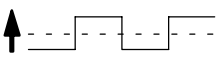 Output voltage No reaction **NG**	Sensor 2: rear sensor (sensor 2, heater, sensor 2 circuit)
Case 4	Injection volume +25 % –12.5 % 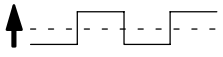 Output voltage No reaction **NG**	Injection volume +25 % –12.5 % 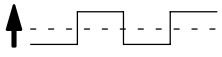 Output voltage No reaction **NG**	Extremely rich or lean actual air–fuel ratio (Injector, fuel pressure, gas leakage in exhaust system, etc.)

The following of A/F CONTROL procedure enables the technician to check and graph the voltage outputs of both the heated oxygen sensors.
For displaying the graph indication, enter ”ACTIVE TEST / A/F CONTROL / USER DATA”, then select ”O2S B1S1 and O2S B1S2” by pressing ”YES” button and push ”ENTER” button before pressing ”F4” button.
HINT:

- If different DTCs related to different systems that have terminal E2 as the ground terminal are output simultaneously, terminal E2 may be open.
- Read freeze frame data using the hand−held tester or the OBD II scan tool. Freeze frame data records the engine conditions when a malfunction is detected. When troubleshooting, it is useful for determining whether the vehicle was running or stopped, the engine was warmed up or not, the air–fuel ratio was lean or rich, etc. at the time of the malfunction.
- A high heated oxygen sensor (sensor 1) voltage (0.5 V or more) could be caused by a rich air fuel mixture. Check for conditions that would cause the engine to run rich.
- A low heated oxygen sensor (sensor 1) voltage (0.4 V or less) could be caused by a lean air fuel mixture. Check for conditions that would cause the engine to run lean.

1	CHECK AIR INDUCTION SYSTEM

(a) Check the air induction system for vacuum leaks.

NG → REPAIR OR REPLACE AIR INDUCTION SYSTEM

OK

2	CHECK CONNECTION OF PCV HOSE

NG → REPAIR OR REPLACE PCV HOSE

OK

3	INSPECT FUEL INJECTOR ASSY(INJECTION AND VOLUME) (See page 11–5)

NG → REPLACE FUEL INJECTOR ASSY (See page 11–10)

OK

4 INSPECT MASS AIR FLOW SENSOR

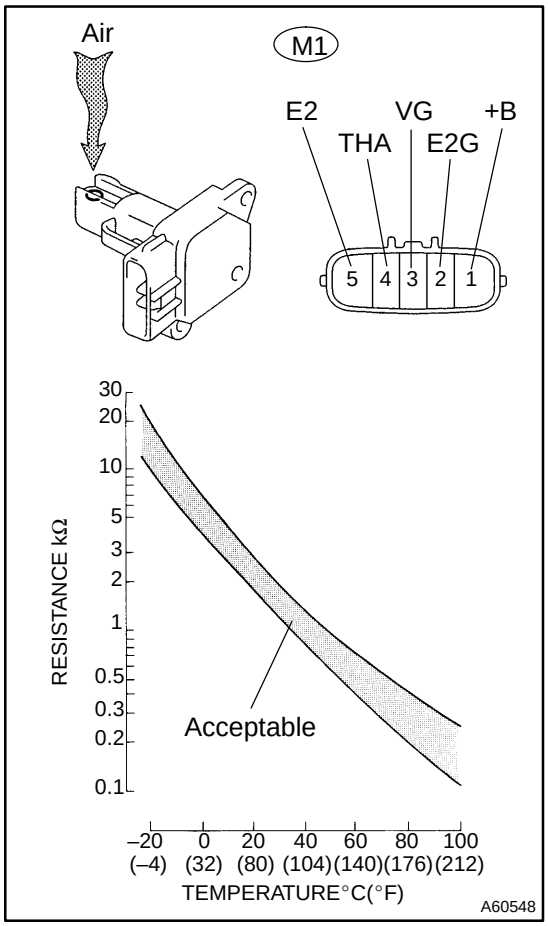

(a) Remove the mas air flow sensor.

(b) Inspect output voltage.

(1) Apply battery voltage across terminals +B and E2G.

(2) Connect the positive (+) tester prove to terminal VG, and negative (–) tester prove to terminal E2G.

(3) Blow air into the mass air flow sensor, and check that the voltage fluctuates.

(c) Resistance inspection.

(1) Measure the resistance between the terminals of the intake air temperature sensor.

Standard:

Tester Connection	Temperature	Specified Condition
THA (M1–4) – E2 (M1–5)	–20 °C (–4 °F)	13.6 to 18.4 kΩ
	20 °C (68 °F)	2.21 to 2.69 kΩ
	60 °C (140 °F)	0.49 to 0.67 kΩ

(d) Reinstall the mas air flow sensor.

NG → **REPLACE MASS AIR FLOW SENSOR**

OK

5	INSPECT ENGINE COOLANT TEMPERATURE SENSOR(RESISTANCE)

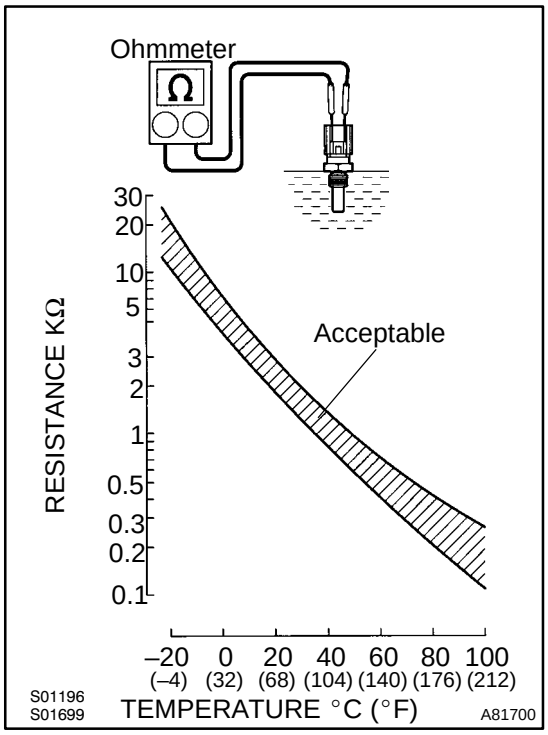

(a) Remove the engine coolant temperature sensor.

(b) Measure the resistance between the terminals of the engine coolant temperature sensor.

Standard:

Tester Connection	Temperature	Specified Condition
1 – 2	20°C (68°F)	2.32 to 2.59 kΩ
	80°C (176°F)	0.310 to 0.326 kΩ

NOTICE:

If you checking the engine coolant temperature sensor in water, be careful not to allow water to go into the terminals. After checking, dry the sensor.

HINT:

Alternate procedure: Connect an ohmmeter to the installed engine coolant temperature sensor and read the resistance. Use an infrared thermometer to measure the engine temperature in the immediate vicinity of the sensor. Compare these values to the resistance/temperature graph. Change the engine temperature (warm up or allow to cool down) and repeat the test.

(c) Reinstall the engine coolant temperature sensor.

NG → **REPLACE ENGINE COOLANT TEMPERATURE SENSOR**

OK

6	CHECK FOR SPARK AND IGNITION (See page 18–1)

NG → **REPAIR OR REPLACE**

OK

7	CHECK FUEL PRESSURE (See page 11–5)

(a) Check the fuel pressure (high or low pressure).

NG → **CHECK AND REPLACE FUEL SYSTEM**

OK

8	CHECK FOR EXHAUST GAS LEAKAGE

NG → **REPAIR OR REPLACE EXHAUST GAS LEAKAGE POINT (See page 15–2)**

OK

9	READ VALUE OF HAND–HELD TESTER OR OBD II SCAN TOOL(OUTPUT VOLTAGE OF HEATED OXYGEN SENSOR (BANK 1 SENSOR 1))

(a) Connect the hand–held tester or the OBD II scan tool to the DLC3.
(b) Start the engine and push the hand–held tester or the OBD II scan tool main switch ON.
(c) Select the item ”DIAGNOSIS / ENHANCED OBD II / DATA LIST / ALL / O2S B1S1”.
(d) Warm up the heated oxygen sensor with the engine speed at 2,500 rpm for approximately 90 seconds.
(e) Read the output voltage of the heated oxygen sensor during idling.
Heated oxygen sensor output voltage:
Alternates repeatedly between less than 0.4 V and more than 0.5 V (See the following table).

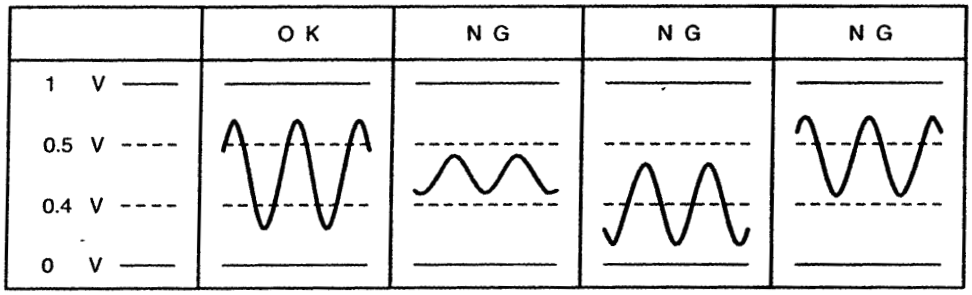

A85076

OK → **Go to step 17**

NG

10	INSPECT HEATED OXYGEN SENSOR(HEATER RESISTANCE)

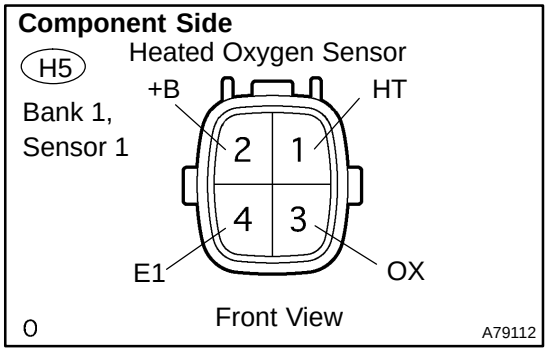

(a) Disconnect the H5 heated oxygen sensor connector.
(b) Measure the resistance between the terminals of the heated oxygen sensor connector.
Standard:

Tester Connection	Specified Condition
HT (H5–1) – +B (H5–2)	5 to 10 Ω at 20 °C (68 °F)
HT (H5–1) – E1 (H5–4)	10 kΩ or higher

(c) Reconnect the heated oxygen sensor connector.

NG → **REPLACE HEATED OXYGEN SENSOR**

OK

11	INSPECT EFI RELAY

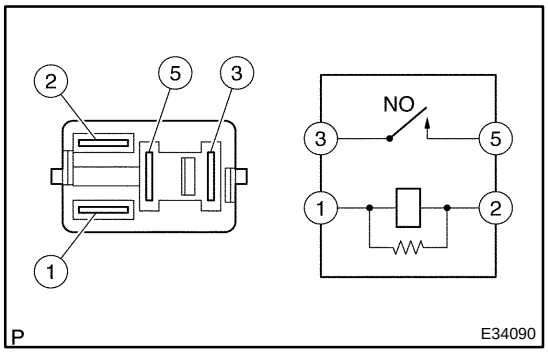

(a) Remove the EFI relay from the engine room R/B.
(b) Check for continuity in the EFI relay.

Standard:

Tester Connection	Specified Condition
1 – 2	Continuity
3 – 5	No continuity
	Continuity (Apply battery voltage to terminals 1 and 2)

(c) Reinstall the EFI relay.

NG → **REPLACE EFI RELAY**

OK

12 CHECK HARNESS AND CONNECTOR(HEATED OXYGEN SENSOR – ECM)

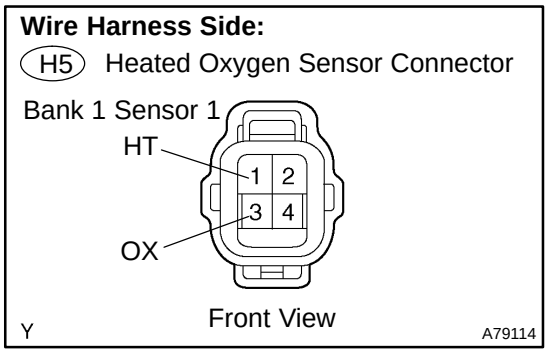

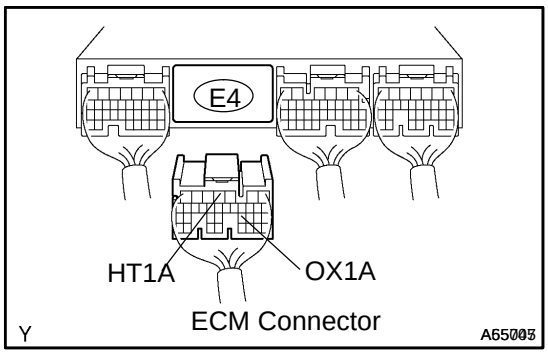

(a) Disconnect the H5 heated oxygen sensor connector.
(b) Disconnect the E4 ECM connector.
(c) Check the resistance between the wire harness side connectors.

Standard (Check for open):

Tester Connection	Specified Condition
HT (H5–1) – HT1A (E4–4)	Below 1 Ω
OX (H5–3) – OX1A (E4–23)	

Standard (Check for short):

Tester Connection	Specified Condition
HT (H5–1) or HT1A (E4–4) – Body ground	10 kΩ or higher
OX (H5–3) or OX1A (E4–23) – Body ground	

(d) Reconnect the ECM connector.
(e) Reconnect the heated oxygen sensor connector.

Reference (Bank 1 Sensor 1 System Drawing):

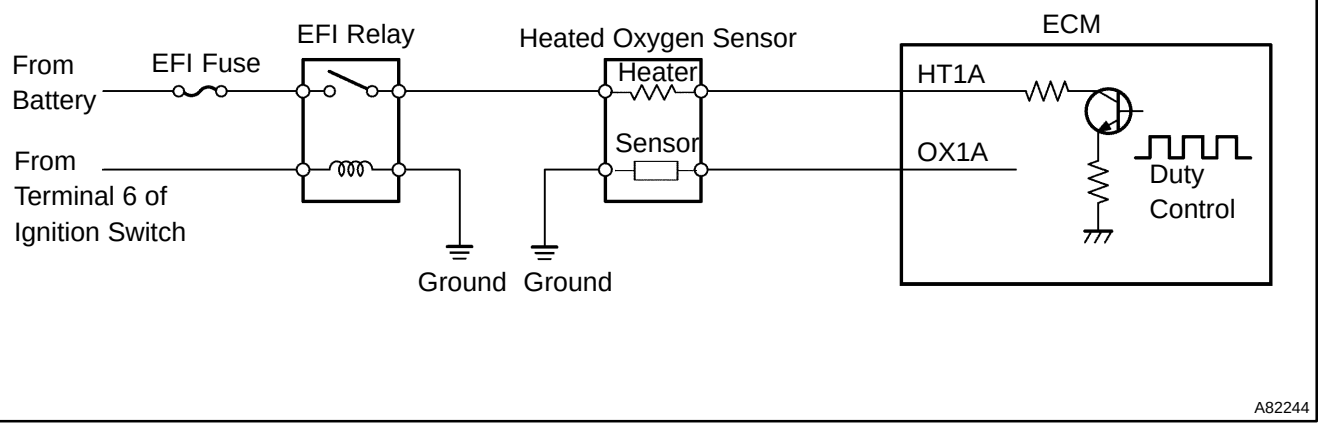

NG → **REPAIR OR REPLACE HARNESS OR CONNECTOR**

OK

13	REPLACE HEATED OXYGEN SENSOR

HINT:
Check the air induction system for vacuum leaks.

GO

14	PERFORM CONFIRMATION DRIVING PATTERN

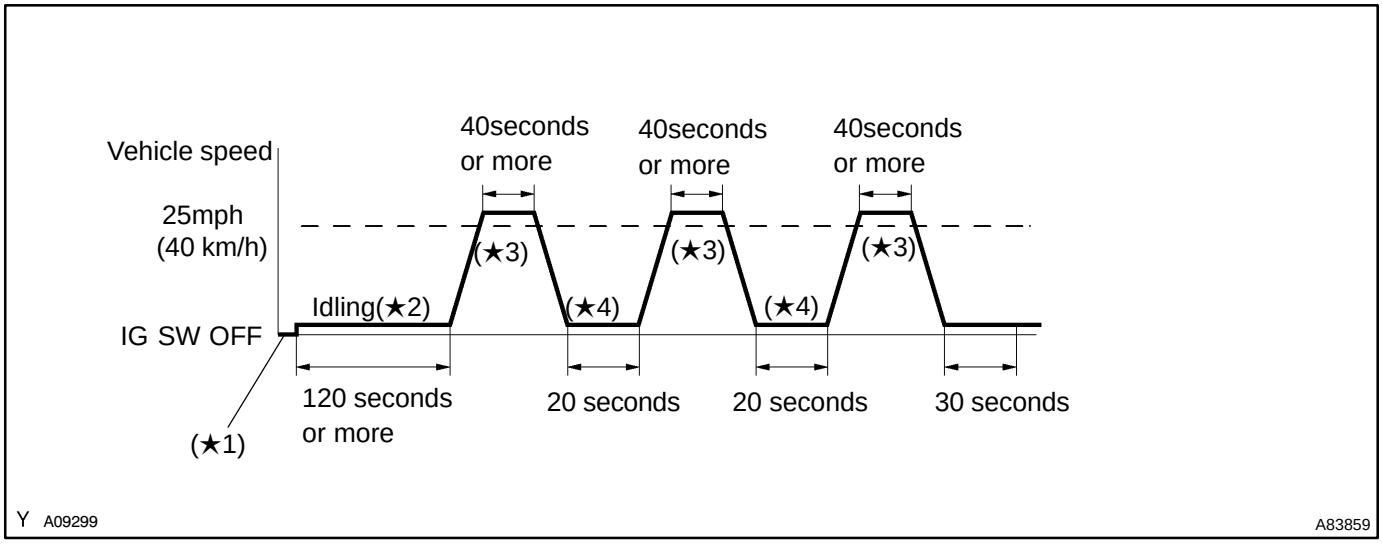

(a) Connect the hand–held tester to the DLC3. (★1)
(b) Switch the hand–held tester from the normal mode to the check mode (See page 05–11). (★1)
(c) Start the engine and let it idle for 120 seconds or more. (★2)
(d) Drive the vehicle at 25 mph (40 km/h) or more for 40 seconds or more. (★3)
(e) Let the engine idle for 20 seconds or more. (★4)
(f) Perform steps (d) and (e) at least 3 times.

HINT:
If a malfunction exists, the MIL will be illuminated on the multi–information display during step (f).

NOTICE:
If the conditions in this test are not strictly followed, detection of a malfunction will not occur. If you do not have the hand–held tester, turn the ignition switch OFF after performing steps from (c) to (f), then perform steps from (c) to (f) again.

GO

15	READ OUTPUT DTC(DTC P0171 AND/OR P0172 ARE OUTPUT AGAIN)

(a) Connect the hand–held tester or the OBD II scan tool to the DLC3.
(b) Turn the ignition switch ON and push the hand–held tester or the OBD II scan tool main switch ON.
(c) Select the item ”DIAGNOSIS / ENHANCED OBD II / DTC INFO / CURRENT CODES”.
(d) Read the DTCs.

Result:

Display (DTC output)	Proceed to
”P0171 and/or P0172” are not output	A
”P0171 and/or P0172”	B

B → **REPLACE ECM (See page 10–11) AND PERFORM CONFIRMATION DRIVING PATTERN (Refer to step 14)**

A

16	CONFIRM IF VEHICLE HAS RUN OUT OF FUEL IN PAST

NO → **CHECK FOR INTERMITTENT PROBLEMS (See page 05–41)**

YES

DTC IS CAUSED BY RUNNING OUT OF FUEL (DTCS P0171 AND/OR P0172)

17	PERFORM CONFIRMATION DRIVING PATTERN

HINT:
Clear all DTCs prior to performing the confirmation driving pattern. (Refer to step 14)

GO

18	READ OUTPUT DTC(DTC P0171 AND/OR P0172 ARE OUTPUT AGAIN)

(a) Connect the hand–held tester or the OBD II scan tool to the DLC3.
(b) Turn the ignition switch ON and push the hand–held tester or the OBD II scan tool main switch ON.
(c) Select the item ”DIAGNOSIS / ENHANCED OBD II / DTC INFO / CURRENT CODES”.
(d) Read the DTCs.

Result:

Display (DTC output)	Proceed to
”P0171 and/or P0172”	A
”P0171 and/or P0172” are not output	B

B → **Go to step 22**

A

19	REPLACE HEATED OXYGEN SENSOR

GO

20	PERFORM CONFIRMATION DRIVING PATTERN (See page 05–29)

HINT:
Clear all DTCs prior to performing the confirmation driving pattern. (Refer to step 14)

GO

21	READ OUTPUT DTC(DTC P0171 AND/OR P0172 ARE OUTPUT AGAIN)

(a) Connect the hand–held tester or the OBD II scan tool to the DLC3.
(b) Turn the ignition switch ON and push the hand–held tester or the OBD II scan tool main switch ON.
(c) Select the item ”DIAGNOSIS / ENHANCED OBD II / DTC INFO / CURRENT CODES”.
(d) Read the DTCs.
Result:

Display (DTC output)	Proceed to
”P0171 and/or P0172” are not output	A
”P0171 and/or P0172”	B

B → **REPLACE ECM (See page 10–11) AND PERFORM CONFIRMATION DRIVING PATTERN (Refer to step 14)**

A

22	CONFIRM IF VEHICLE HAS RUN OUT OF FUEL IN PAST

NO → **CHECK FOR INTERMITTENT PROBLEMS (See page 05–41)**

YES

DTC IS CAUSED BY RUNNING OUT OF FUEL

DTC	P0300	RANDOM/MULTIPLE CYLINDER MISFIRE DETECTED

DTC	P0301	CYLINDER 1 MISFIRE DETECTED

DTC	P0302	CYLINDER 2 MISFIRE DETECTED

DTC	P0303	CYLINDER 3 MISFIRE DETECTED

DTC	P0304	CYLINDER 4 MISFIRE DETECTED

CIRCUIT DESCRIPTION

When a misfire occurs in the engine, hydrocarbons (HC) enter the exhaust in high concentrations. If this HC concentration is high enough, there could be an increase in exhaust emissions levels. High concentrations of HC passing through the catalyst also cause to temperature of the catalyst to increase, possibly damaging the catalyst. To prevent this increase in the emissions and limit the possibility of thermal damage, the ECM monitors the misfire rate. When the temperature of the catalyst reaches a point of thermal degradation, the ECM will blink the MIL. For monitoring misfire, the ECM uses both the camshaft position sensor and crankshaft position sensor. The camshaft position sensor is used to identify misfiring cylinders and the crankshaft position sensor is used to measure variations in the crankshaft rotation speed. The misfire counter increments when crankshaft rotation speed variations exceed threshold values.
The ECM illuminates the MIL if the misfiring rate exceeds a threshold value and could cause emissions deterioration.

DTC No.	DTC Detection Condition	Trouble Area
P0300	Misfiring of random cylinders is detected	• Open or short in engine wire • Connector connection • Vacuum hose connection • Ignition system • Injector • Fuel pressure • Mass air flow sensor • Engine coolant temperature sensor • Compression pressure • Valve clearance • Valve timing • PCV hose connection • PCV hose • ECM
P0301 P0302 P0303 P0304	Misfiring of each cylinder is detected	

HINT:
When codes for a misfiring cylinder are recorded repeatedly but no random misfire code is recorded, it indicates that the misfires have been detected and recorded at different times.

Reference: Inspection using oscilloscope
With the engine idling, check the waveform between terminals #10 to #40 and E01 of the ECM connectors.
HINT:
The correct waveform is as shown.

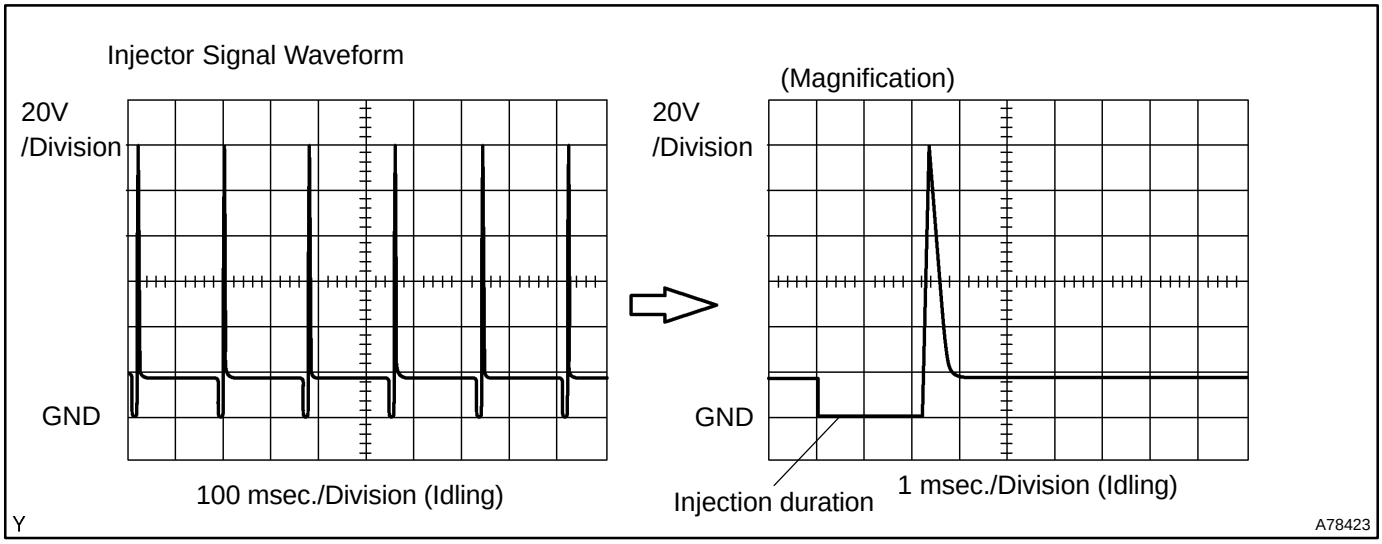

MONITOR DESCRIPTION

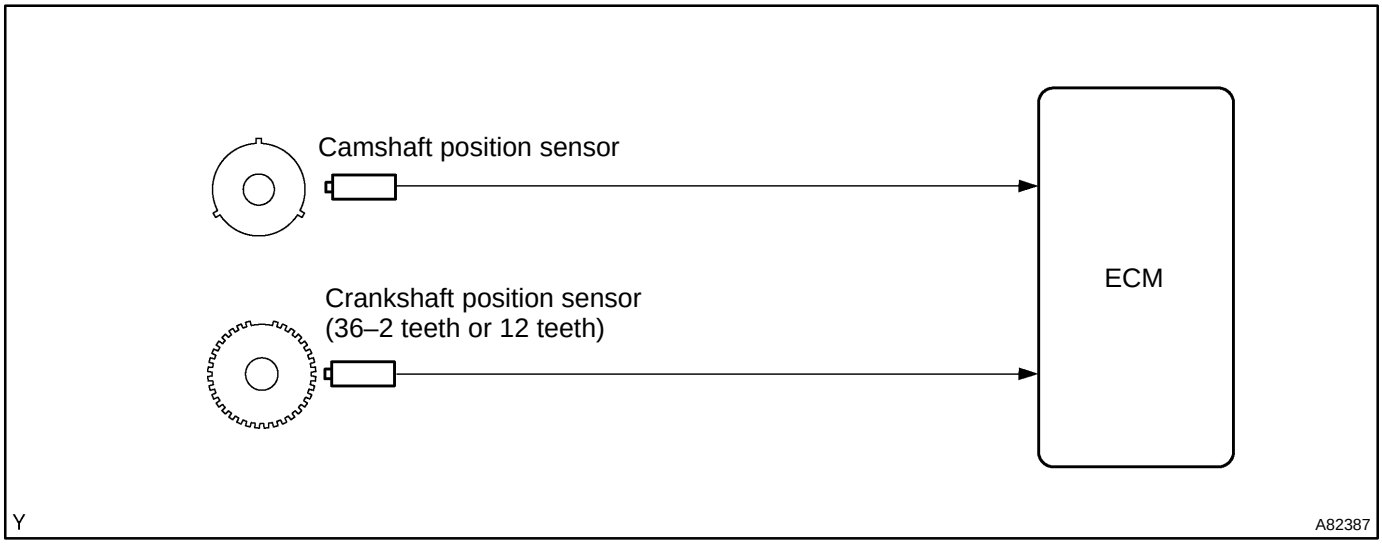

The ECM illuminates the MIL if the misfiring rate exceeds a threshold value and could cause emissions deterioration.
The ECM will illuminate the MIL when the percent misfire exceeds the specified limit per 1,000 engine revolutions. One occurrence of excessive misfire during engine start will set the MIL. Four occurrences are required to set the MIL 1,000 revolutions after engine start. (2 trip detection logic)
The MIL blinks when ”percent misfire causing catalyst damage” per 200 revolution met 3 times (1 time if the engine rpm is in high speed range). (MIL blinks immediately)

MONITOR STRATEGY

Related DTCs	P0300	Random/Multiple cylinder misfire detected
	P0301	Cylinder 1 misfire detected
	P0302	Cylinder 2 misfire detected
	P0303	Cylinder 3 misfire detected
	P0304	Cylinder 4 misfire detected
Required sensors/components	Main sensors	Camshaft position sensor, crankshaft position sensor
	Related sensors	Engine coolant temperature sensor, intake air temperature sensor, throttle position sensor
Frequency of operation	Continuous	
Duration	Every 1,000 revolutions (soon after engine is started: 1 time, other 4 times) (emission related misfire) Every 200 revolutions (1 or 3 times) (catalyst deteriorating misfire)	
MIL operation	2 driving cycles MIL ON Immediate MIL blinking (Catalyst deteriorating misfire)	
Sequence of operation	None	

TYPICAL ENABLING CONDITIONS

Item	Specification	
	Minimum	Maximum
The monitor will run whenever the following DTCs are not present	See "List of Disable a Monitor" (On page 05–25)	
Battery voltage	8 V	–
VVT	Normal operation (i. e. not under scan–tool control)	
Engine speed fluctuation	Engine speed should not have changed rapidly	
Engine speed (Two full revolutions (2 rev.) after engine has started)	450 rpm	6,700 rpm (AT) 6,600 rpm (MT)
Engine coolant temperature	–10°C (14°F)	–
Intake air temperature	–10°C (14°F)	–
Intake air amount per revolution (varies with engine speed)	0.14 g/rev	–
Throttle position learning	Completed	
Throttle position	Rapid throttle opening or closing operation has not occurred	
	–	Changing value of throttle position greater than 0.5° per 0.008 seconds
Transient spark retard (The spark timing delay control in a short time for preventing surge at the time of a sudden acceleration.)	Not commanded	
Rough road counter	–	10 times/1,000 revolutions (not running on rough road)

TYPICAL MALFUNCTION THRESHOLDS

Detection Criteria	Threshold
Emission related misfire rate: 1. During the first 1,000 revolutions after engine start (1 time will set MIL) 2. After the first 1,000 revolutions have occurred (4 times will set MIL)	1.44 % per 1,000 revolutions
Catalyst damage misfire count: 1. Low engine rpm area (ex. less than 3,000 rpm): 200 rev. (3 times to set MIL) 2. High engine rpm area: Every 200 revolutions	75 count per 200 revolutions (threshold varies with engine speed, intake air amount per revolution)

WIRING DIAGRAM

Refer to DTC P0351 on page 05–177 for the wiring diagram of the ignition system.

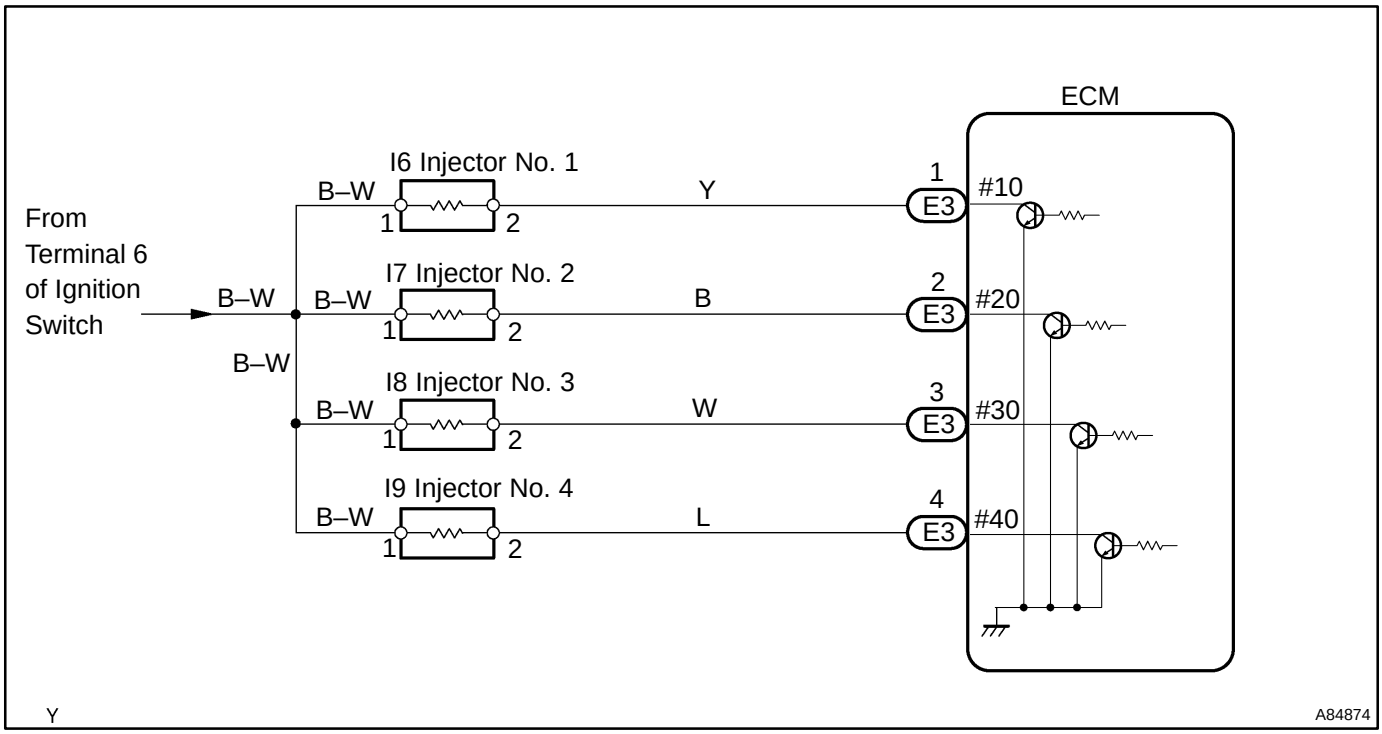

CONFIRMATION DRIVING PATTERN

(a) Connect the hand–held tester or the OBD II scan tool to the DLC3.
(b) Record DTCs and the freeze frame data.
(c) Set the check mode using the hand–held tester (See page 05–11).
(d) Read the value on the misfire counter for each cylinder when idling. If the value is displayed on the misfire counter, skip the following procedure of confirmation driving.
(e) Drive the vehicle several times with the engine speed, load and its surrounding range shown with ENGINE SPD, CALC LOAD in the freeze frame data or MISFIRE RPM, MISFIRE LOAD in the data list.

If you have no hand–held tester, turn the ignition switch OFF after the symptom is simulated once. Then repeat the simulation process again.

HINT:

Do not turn the ignition switch OFF during the confirmation driving pattern. This switches the diagnosis system from the check mode to the normal mode, so all the DTCs and freeze frame data will be erased.

Engine Speed	Time
Idling	3 minutes and 30 seconds or more
1,000 rpm	3 minutes or more
2,000 rpm	1 minute and 30 seconds or more
3,000 rpm	1 minute or more

(f) Check whether there is misfire or not by monitoring DTC and the freeze frame data. After that, record them.
(g) Turn the ignition switch OFF and wait for at least 5 seconds.

INSPECTION PROCEDURE

HINT:

- If DTCs besides misfire are memorized simultaneously, first perform the troubleshooting for them.
- Read freeze frame data using the hand−held tester or the OBD II scan tool. Freeze frame data records the engine conditions when a malfunction is detected. When troubleshooting, it is useful for determining whether the vehicle was running or stopped, the engine was warmed up or not, the air–fuel ratio was lean or rich, etc. at the time of the malfunction.
- If the misfire does not occur when the vehicle is brought to the workshop, the misfire can be confirmed by reproducing the condition of the freeze frame data. After finishing the repair, confirm that there is no misfire (See confirmation driving pattern).
- When either of SHORT FT #1 or LONG FT #1 in the freeze frame data is over the range of ±20 %, there is a possibility that the air–fuel ratio is inclining either to RICH (–20 % or less) or LEAN (+20 % or more).
- When COOLANT TEMP in the freeze frame data is less than 80˚C (176˚F), there is a possibility of misfire only during engine warm up.
- If the misfire cannot be reproduced, the reason may be because of the driving the vehicle with lack of fuel, the use of improper fuel, a stain on the ignition plug, etc.
- Be sure to check the value on the misfire counter after the repair.

1	CHECK OTHER DTC OUTPUT(IN ADDITION TO MISFIRE DTCS)

(a) Connect the hand–held tester or the OBD II scan tool to the DLC3.
(b) Turn the ignition switch ON and push the hand–held tester or the OBD II scan tool main switch ON.
(c) Select the item ”DIAGNOSIS / ENHANCED OBD II / DTC INFO / CURRENT CODES”.
(d) Read the DTCs.

Result:

Display (DTC output)	Proceed to
”P0300, P0301, P0302, P0303 and/or P0304”	A
”P0300, P0301, P0302, P0303 and/or P0304” and other DTCs	B

HINT:

If any other codes besides P0300, P0301, P0302, P0303 or P0304 are output, perform the troubleshooting for those DTCs first.

B → **GO TO RELEVANT DTC CHART (See page 05–35)**

A

2	CHECK WIRE HARNESS, CONNECTOR AND VACUUM HOSE IN ENGINE ROOM

(a) Check the connection conditions of the wire harness and connector.
(b) Check the vacuum hose piping for disconnection and break.

NG → **REPAIR OR REPLACE, THEN CONFIRM THAT THERE IS NO MISFIRE**

OK

3	CHECK CONNECTION OF PCV HOSE

NG → REPAIR OR REPLACE PCV HOSE

OK

4	READ VALUE OF HAND–HELD TESTER OR OBD II SCAN TOOL(NUMBER OF MISFIRE)

(a) Connect the hand–held tester or the OBD II scan tool to the DLC3.
(b) Turn the ignition switch ON and push the hand–held tester or the OBD II scan tool main switch ON.
(c) Start the engine.
(d) Select the item ”DIAGNOSIS / ENHANCED OBD II / DATA LIST / ALL / CYL#1 – CYL#4”.
(e) Read the number of misfire on the hand–held tester or the OBD II scan tool.

HINT:

When a misfire is not reproduced, be sure to branch below based on the stored DTC.

Result:

High Misfire Rate Cylinder	Proceed to
1 or 2 cylinders	A
More than 3 cylinders	B

B → Go to step 15

A

5	CHECK SPARK PLUG AND SPARK OF MISFIRING CYLINDER

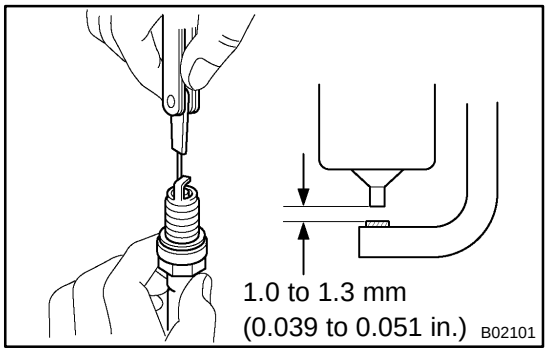

(a) Remove the ignition coil assembly.
(b) Remove the spark plug.
(c) Check the spark plug type.

Recommended spark plug:

DENSO made	SK16R11
NGK made	IFR5A11

(d) Check the spark plug electrode gap.

Electrode gap: 1.0 to 1.3 mm (0.039 to 0.051 in.)

NOTICE:

If adjusting the gap of a new spark plug, bend only the base of the ground electrode. Do not touch the tip. Never attempt to adjust the gap on a used plug.

(e) Check the electrode for carbon deposits.
(f) Perform a spark test.

CAUTION:

Absolutely disconnect the each injector connectors.

NOTICE:

Do not crank the engine for more than 5 seconds at a time.

(1) Install the spark plug to the ignition coil, and connect the ignition coil connector.
(2) Disconnect the injector connector.
(3) Ground the spark plug.
(4) Check if spark occurs while the engine is being cranked.

Standard: Spark jumps across electrode gap.

(g) Reinstall the spark plug.
(h) Reinstall the ignition coil assy.

OK → **Go to step 8**

NG

6	CHANGE NORMAL SPARK PLUG AND CHECK SPARK OF MISFIRING CYLINDER

(a) Change to the normal spark plug.
(b) Perform a spark test.

CAUTION:
Absolutely disconnect each injector connector.
NOTICE:
Do not crank the engine for more than 5 seconds at a time.

(1) Install the spark plug to the ignition coil, and connect the ignition coil connector.
(2) Disconnect the injector connector.
(3) Ground the spark plug.
(4) Check if spark occurs while the engine is being cranked.

Standard: Spark jumps across electrode gap.

OK → **REPLACE SPARK PLUG**

NG

7	CHECK HARNESS AND CONNECTOR OF MISFIRING CYLINDER(IGNITION COIL – ECM)

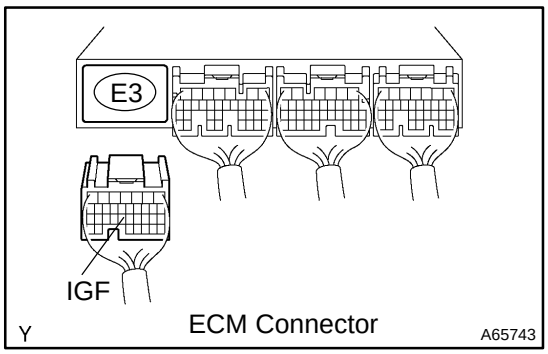

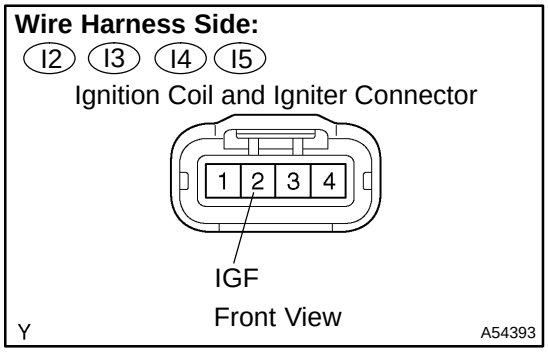

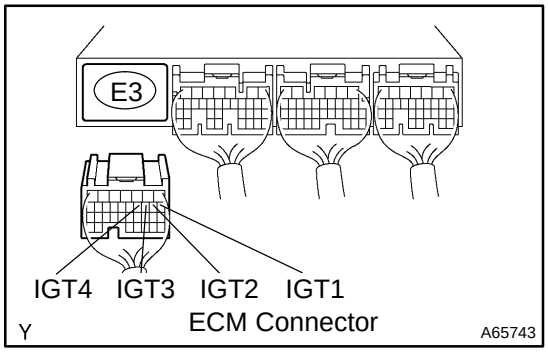

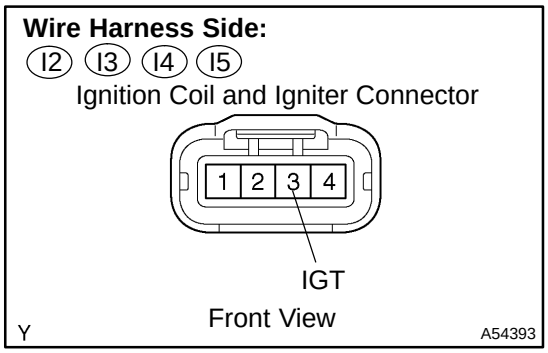

(a) Check the harness and connector between the ignition coil and ECM (IGF terminal) connectors
  (1) Disconnect the I2, I3, I4 or I5 ignition coil and igniter connector.
  (2) Disconnect the ECM E3 connector.
  (3) Check the resistance between the wire harness side connectors.

Standard (Check for open):

Tester Connection	Specified Condition
IGF (I2–2) – IGF (E3–23)	Below 1 Ω
IGF (I3–2) – IGF (E3–23)	
IGF (I4–2) – IGF (E3–23)	
IGF (I5–2) – IGF (E3–23)	

Standard (Check for short):

Tester Connection	Specified Condition
IGF (I2–2) or IGF (E3–23) – Body ground	10 kΩ or higher
IGF (I3–2) or IGF (E3–23) – Body ground	
IGF (I4–2) or IGF (E3–23) – Body ground	
IGF (I5–2) or IGF (E3–23) – Body ground	

  (4) Reconnect the ECM connector.
  (5) Reconnect the ignition coil and igniter connector.

(b) Check the harness and connector between the ignition coil and ECM (IGT terminal) connectors
  (1) Disconnect the I2, I3, I4 or I5 ignition coil and igniter connector.
  (2) Disconnect the ECM E3 connector.
  (3) Check the resistance between the wire harness side connectors.

Standard (Check for open):

Tester Connection	Specified Condition
IGT (I2–3) – IGT1 (E3–8)	Below 1 Ω
IGT (I3–3) – IGT2 (E3–9)	
IGT (I4–3) – IGT3 (E3–10)	
IGT (I5–3) – IGT4 (E3–11)	

Standard (Check for short):

Tester Connection	Specified Condition
IGT (I2–3) or IGT1 (E3–8) – Body ground	10 kΩ or higher
IGT (I3–3) or IGT2 (E3–9) – Body ground	
IGT (I4–3) or IGT3 (E3–10) – Body ground	
IGT (I5–3) or IGT4 (E3–11) – Body ground	

  (4) Reconnect the ECM connector.
  (5) Reconnect the ignition coil and igniter connector.

OK → **REPLACE IGNITION COIL ASSY (THEN CONFIRM THAT THERE IS NO MISFIRE)**

NG

REPAIR OR REPLACE HARNESS OR CONNECTOR

8	INSPECT ECM TERMINAL OF MISFIRING CYLINDER(#10, #20, #30 OR #40 VOLTAGE)

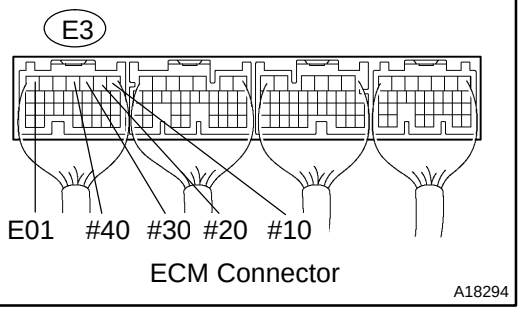

(a) Turn the ignition switch ON.
(b) Measure the voltage between the terminals of the E3 ECM connector.

Standard:

Symbols (Terminal No.)	Specified Condition
#10 (E3–1) – E01 (E3–7)	8 to 14 V
#20 (E3–2) – E01 (E3–7)	
#30 (E3–3) – E01 (E3–7)	
#40 (E3–4) – E01 (E3–7)	

OK → **Go to step 11**

NG

9	INSPECT FUEL INJECTOR RESISTANCE OF MISFIRING CYLINDER (See page 11–7)

NG → **REPLACE FUEL INJECTOR ASSY (See page 11–10)**

OK

10	CHECK HARNESS AND CONNECTOR OF MISFIRING CYLINDER(INJECTOR – ECM, INJECTOR – IGNITION SWITCH)

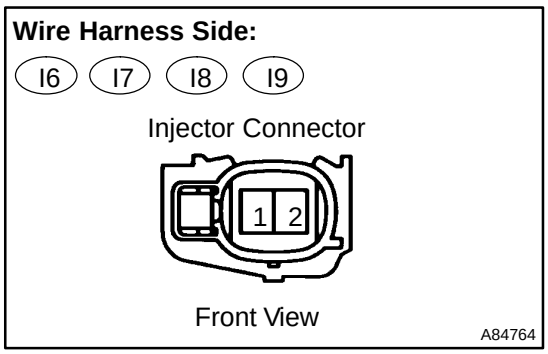

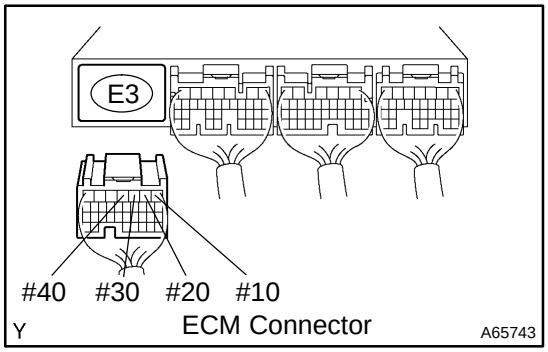

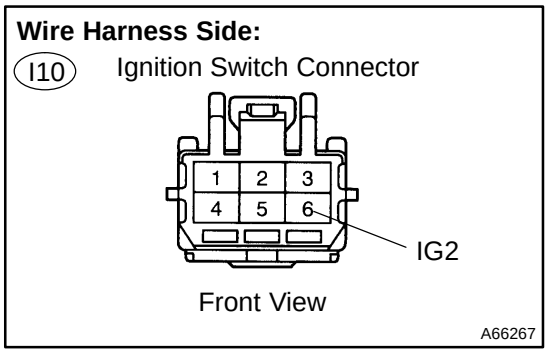

(a) Check the harness and connector between the injector connector and ECM connector.
  (1) Disconnect the I6, I7, I8 or I9 injector connector.
  (2) Disconnect the E3 ECM connector.
  (3) Measure the resistance between the wire harness side connectors.

Standard (Check for open):

Tester Connection	Specified Condition
Injector (I6–2) – #10 (E3–1)	Below 1 Ω
Injector (I7–2) – #20 (E3–2)	
Injector (I8–2) – #30 (E3–3)	
Injector (I9–2) – #40 (E3–4)	

Standard (Check for short):

Tester Connection	Specified Condition
Injector (I6–2) or #10 (E3–1) – Body ground	10 kΩ or higher
Injector (I7–2) or #20 (E3–2) – Body ground	
Injector (I8–2) or #30 (E3–3) – Body ground	
Injector (I9–2) or #40 (E3–4) – Body ground	

  (4) Reconnect the ECM connector.
  (5) Reconnect the Iinjector connector.

(b) Check the harness and connector between the injector connector and ignition switch connector.
  (1) Disconnect the I6, I7, I8 or I9 injector connector.
  (2) Disconnect the I10 ignition switch connector.
  (3) Measure the resistance between the wire harness side connectors.

Standard (Check for open):

Tester Connection	Specified Condition
Injector (I6–1) – IG2 (I10–6)	Below 1 Ω
Injector (I7–1) – IG2 (I10–6)	
Injector (I8–1) – IG2 (I10–6)	
Injector (I9–1) – IG2 (I10–6)	

Standard (Check for short):

Tester Connection	Specified Condition
Injector (I6–1) or IG2 (I10–6) – Body ground	10 kΩ or higher
Injector (I7–1) or IG2 (I10–6) – Body ground	
Injector (I8–1) or IG2 (I10–6) – Body ground	
Injector (I9–1) or IG2 (I10–6) – Body ground	

  (4) Reconnect the ignition switch connector.
  (5) Reconnect the injector connector.

NG → **REPAIR OR REPLACE HARNESS OR CONNECTOR**

OK

11	INSPECT FUEL INJECTOR INJECTION AND VOLUME OF MISFIRING CYLINDER (See page 11–7)

NG → REPLACE FUEL INJECTOR ASSY

OK

12	CHECK CYLINDER COMPRESSION PRESSURE OF MISFIRING CYLINDER (See page 14–1)

NG → REPAIR OR REPLACE

OK

13	CHECK VALVE CLEARANCE OF MISFIRING CYLINDER (See page 14–5)

NG → ADJUST VALVE CLEARANCE (See page 14–5)

OK

14	SWITCH STEP BY NUMBER OF MISFIRE CYLINDER(REFER RESULT OF STEP 4)

HINT:

- If the result of step 4 is ”1 or 2 cylinders” proceed to A.
- If the result of step 4 is ”more than 3 cylinders” proceed to B.

B → CHECK FOR INTERMITTENT PROBLEMS (See page 05–41)

A

15	CHECK VALVE TIMING(CHECK FOR LOOSENESS OR A JUMPED TOOTH OF THE TIMING CHAIN) (See page 14–82)

NG → ADJUST VALVE TIMING (See page 14–128) (REPAIR OR REPLACE TIMING CHAIN)

OK

16	CHECK FUEL PRESSURE (See page 11–5)

NG → CHECK AND REPLACE FUEL PUMP, PRESSURE REGULATOR, FUEL PIPE LINE AND FILTER

OK

17	READ VALUE OF HAND–HELD TESTER OR OBD II SCAN TOOL(INTAKE AIR TEMPERATURE AND MASS AIR FLOW RATE)

(a) Connect the hand–held tester or the OBD II scan tool to the DLC3.
(b) Turn the ignition switch ON.
(c) Check the intake air temperature.
  (1) Select the item ”DIAGNOSIS / ENHANCED OBD II / DATA LIST / ALL / INTAKE AIR” and read its value displayed on the hand–held tester or the OBD II scan tool.

  Temperature: Equivalent to ambient temperature
(d) Check the air flow rate.
  (1) Select the item ”DIAGNOSIS / ENHANCED OBD II / DATA LIST / ALL / MAF” and read its value displayed on the hand–held tester or the OBD II scan tool.

  Standard:

Condition	Air flow rate (gm/s)
Ignition switch ON (do not start engine)	0
Idling	4 to 6
Running without load (2,500 rpm)	13 to 20
From idling to quickly accelerating	Air flow rate fluctuates

NG → **REPLACE MASS AIR FLOW SENSOR**

OK

18	INSPECT ENGINE COOLANT TEMPERATURE SENSOR(RESISTANCE)

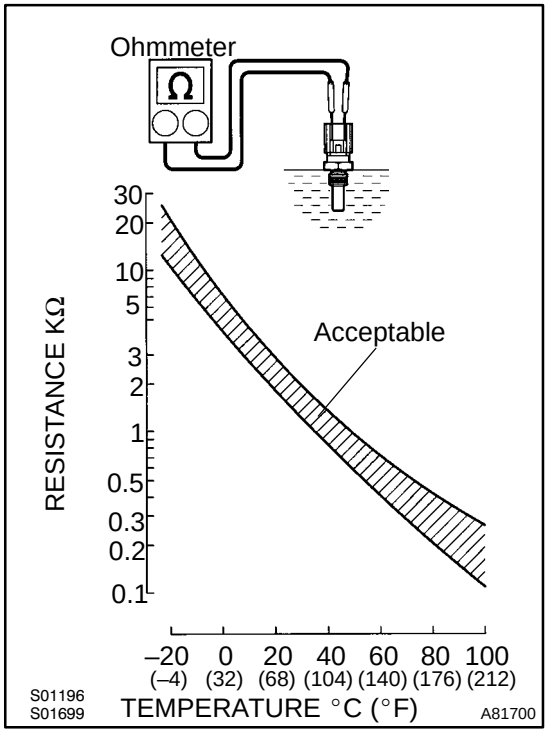

(a) Remove the engine coolant temperature sensor.
(b) Measure the resistance between the terminals of the engine coolant temperature sensor.

  Standard:

Tester Connection	Temperature	Specified Condition
1 – 2	20°C (68°F)	2.32 to 2.59 kΩ
	80°C (176°F)	0.310 to 0.326 kΩ

NOTICE:

If you checking the engine coolant temperature sensor in water, be careful not to allow water to go into the terminals. After checking, dry the sensor.

HINT:

Alternate procedure: Connect an ohmmeter to the installed engine coolant temperature sensor and read the resistance. Use an infrared thermometer to measure the engine temperature in the immediate vicinity of the sensor. Compare these values to the resistance/temperature graph. Change the engine temperature (warm up or allow to cool down) and repeat the test.

NG → **REPLACE ENGINE COOLANT TEMPERATURE SENSOR**

OK

19	SWITCH STEP BY NUMBER OF MISFIRE CYLINDER(REFER RESULT OF STEP 4)

HINT:

- If the result of step 4 is ”1 or 2 cylinders” proceed to A.
- If the result of step 4 is ”more than 3 cylinders” proceed to B.

B → AGAIN GO TO STEP 5

A

CHECK FOR INTERMITTENT PROBLEMS (See page 05–41)

DTC	P0325	KNOCK SENSOR 1 CIRCUIT (BANK 1 OR SINGLE SENSOR)

DTC	P0327	KNOCK SENSOR 1 CIRCUIT LOW INPUT (BANK 1 OR SINGLE SENSOR)

DTC	P0328	KNOCK SENSOR 1 CIRCUIT HIGH INPUT (BANK 1 OR SINGLE SENSOR)

CIRCUIT DESCRIPTION

A flat type knock sensor (non–resonant type) has the structure that can detect the vibration in a wider band of frequency from about 6 kHz to 15 kHz and has the following features.
Knock sensors are fitted on the cylinder block to detect the engine knocking.
The sensor contains a piezoelectric element which generates a voltage when it becomes deformed, which occurs when the cylinder block vibrates due to knocking. If engine knocking occurs, the ignition timing is retarded to suppress it.

DTC No.	DTC Detecting Condition	Trouble Area
P0325	Knock sensor signal level remains at low for more than 10 seconds	• Open or short in knock sensor circuit • Knock sensor (under–torqued or loose) • ECM
P0327	Output voltage of the knock sensor is 0.5 V or less	• Short in knock sensor circuit • Knock sensor • ECM
P0328	Output voltage of the knock sensor is 4.5 V or more	• Open in knock sensor circuit • Knock sensor • ECM

HINT:
If the ECM detects the DTC P0325, it enters the fail–safe mode in which the corrective retarded angle value is set to the maximum value.

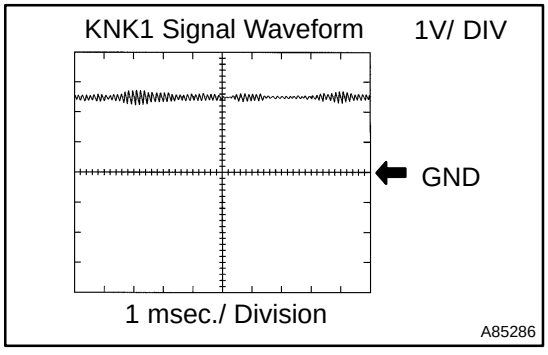

Reference: Inspection using the oscilloscope.

(1) After warming up run the engine at 4,000 rpm, check the waveform between terminal KNK1 and EKNK of the ECM connector.

MONITOR DESCRIPTION

The knock sensor, located on the cylinder block, detects spark knock. When spark knock occurs, the sensor picks–up vibrates in a specific frequency range. When the ECM detects the voltage in this frequency range, it retards the ignition timing to suppress the spark knock.
The ECM also senses background engine noise with the knock sensor and uses this noise to check for faults in the sensor. If the knock sensor signal level is too low for more than 10 seconds, and if the knock sensor output voltage is out of normal range, the ECM interprets this as a fault in the knock sensor and sets a DTC.

MONITOR STRATEGY

Related DTCs	P0325	Knock sensor (bank 1) range check or rationality
	P0327	Knock sensor (bank 1) range check (low voltage)
	P0328	Knock sensor (bank 1) range check (high voltage)
Required sensors/components	Main sensors	Knock sensor
	Related sensors	Crankshaft position sensor, camshaft position sensor, engine coolant temperature sensor, mass air flow sensor
Frequency of operation	Continuous	
Duration	10 seconds	
MIL operation	Immediately	
Sequence of operation	None	

TYPICAL ENABLING CONDITIONS

Item	Specification	
	Minimum	Maximum
The monitor will run whenever the following DTCs are not present	See ”List of Disable a Monitor” (On page 05–25)	
Battery voltage	10 V	–
Idle	OFF	
Time after engine start	5 seconds	–
Engine coolant temperature	60°C (140°F)	–
Intake air amount per revolution	0.3 g/rev	–

TYPICAL MALFUNCTION THRESHOLDS

Detection Criteria	Threshold
P0325 (Range check/Rationality):	
Time while the voltage output of the knock sensor is below the specific threshold	10 seconds
P0325 (Fluttering):	
Knock sensor voltage	Less than 0.5 V and More than 4.5 V
P0327:	
Knock sensor voltage	Less than 0.5 V
P0328:	
Knock sensor voltage	More than 4.5 V

WIRING DIAGRAM

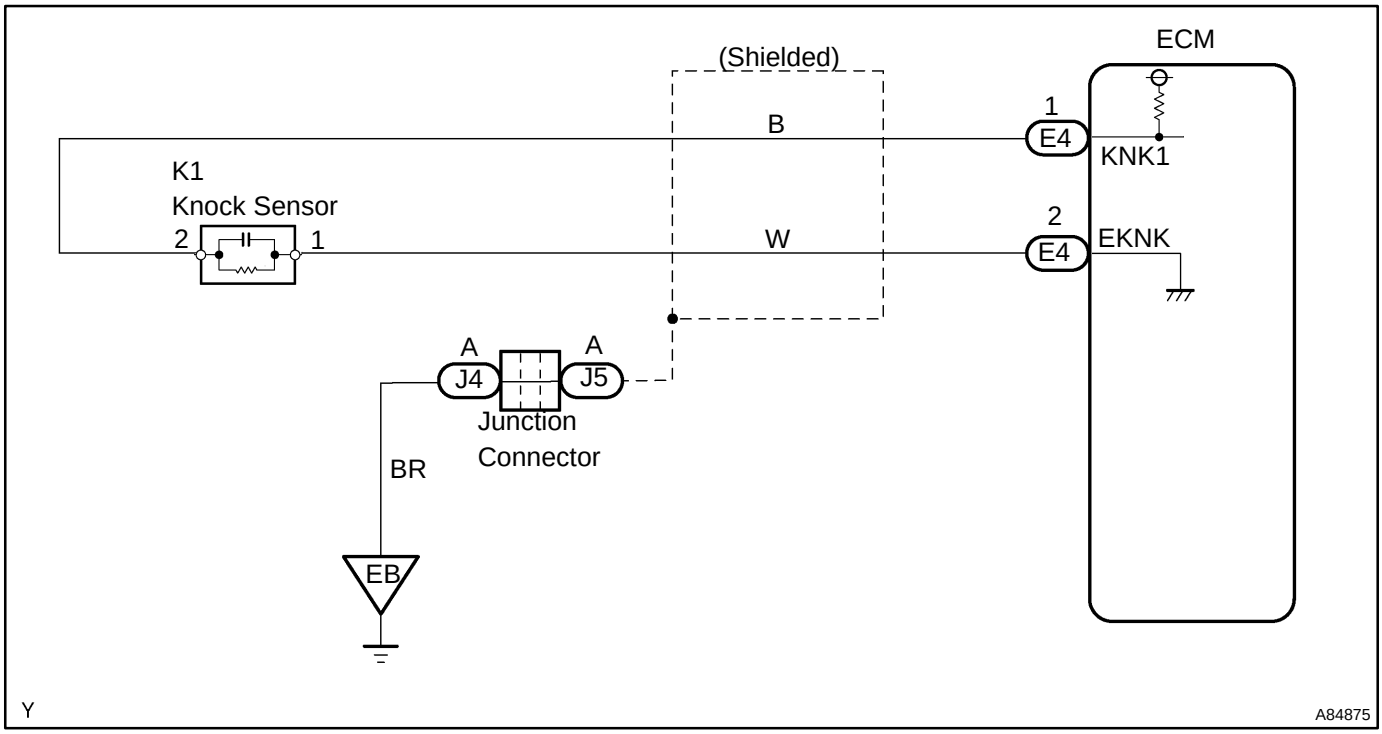

INSPECTION PROCEDURE

HINT:

Read freeze frame data using the hand−held tester or the OBD II scan tool. Freeze frame data records the engine conditions when a malfunction is detected. When troubleshooting, it is useful for determining whether the vehicle was running or stopped, the engine was warmed up or not, the air–fuel ratio was lean or rich, etc. at the time of the malfunction.

1	READ OUTPUT DTC

(a) Clear the DTC.
(b) Warm up the engine.
(c) Run the engine at 3,000 rpm for 10 seconds or more.
(d) Connect the hand–held tester or the OBD II scan tool to the DLC3.
(e) Turn the ignition switch ON and push the hand–held tester or the OBD II scan tool main switch ON.
(f) Select the item ”DIAGNOSIS / ENHANCED OBD II / DTC INFO / CURRENT CODES”.
(g) Read the DTCs.

Result :

Display (DTC output)	Proceed to
P0325	A
”P0325, P0327 and/or P0328”	B
No output	C

B → **Go to step 3**

C → **CHECK FOR INTERMITTENT PROBLEMS (See page 05–41)**

A

2 INSPECT KNOCK SENSOR

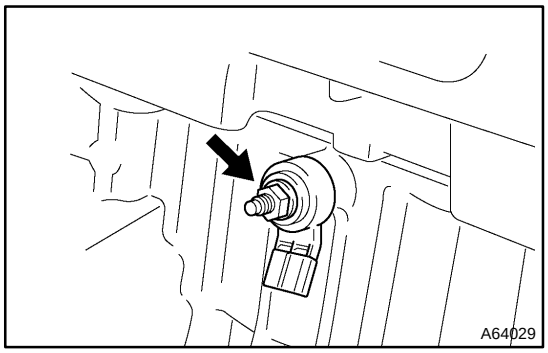

(a) Check the knock sensor installation.
Torque: 20 N·m (204 kgf·cm, 15 ft·lbf)

NG → **TIGHTEN SENSOR**

OK

3 CHECK HARNESS AND CONNECTOR(ECM – KNOCK SENSOR)

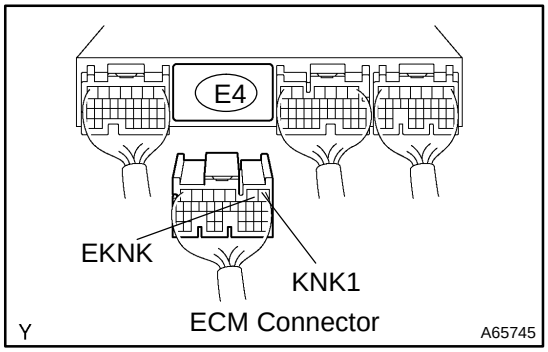

(a) Disconnect the E4 ECM connector.
(b) Measure the resistance between terminals of the E4 ECM connector.
Standard:

Tester Connection	Specified Condition
KNK1 (E4–1) – EKNK (E4–2)	120 to 280 KΩ at 20 °C (68 °F)

(c) Reconnect the ECM connector.

NG → **Go to step 5**

OK

4 INSPECT ECM(KNK1 VOLTAGE)

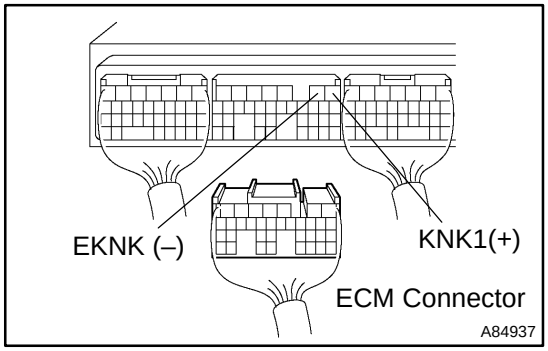

(a) Disconnect the E4 ECM connector.
(b) Turn the ignition switch ON.
(c) Measure the voltage between terminals of the E4 ECM terminals.
Standard:

Tester Connection	Specified Condition
KNK1 (E4–1) – EKNK (E4–2)	4.5 to 5.5 V

(d) Reconnect the ECM connector.

NG → **REPLACE ECM (See page 10–11)**

OK

CHECK FOR INTERMITTENT PROBLEMS (See page 05–41)

NOTICE:
Fault may be intermittent. Check harness and connectors carefully.

5 INSPECT KNOCK SENSOR

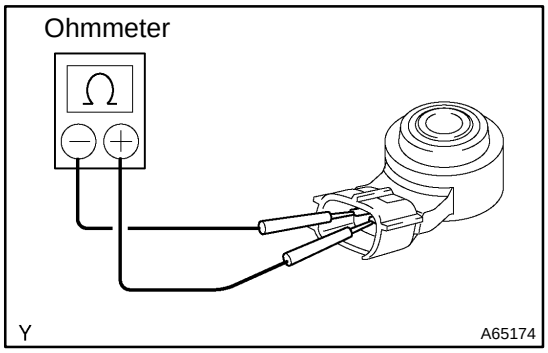

(a) Remove the K1 knock sensor.
(b) Measure the resistance between the terminals.
Standard:

Tester Connection	Specified Condition
KNK1 (K1–1) – EKNK (K1–2)	120 to 280 KΩ aKt 20 °C (68 °F)

(c) Reinstall the knock sensor.

NG → **REPLACE KNOCK SENSOR**

OK

REPAIR OR REPLACE HARNESS OR CONNECTOR

DTC	P0335	CRANKSHAFT POSITION SENSOR ”A” CIRCUIT

DTC	P0339	CRANKSHAFT POSITION SENSOR ”A” CIRCUIT INTERMITTENT

CIRCUIT DESCRIPTION

The crankshaft position sensor (NE signal) consists of a magnet, iron core and pickup coil.
The NE signal plate (crankshaft position sensor plate) has 34 teeth and is installed on the crankshaft. The NE signal sensor generates 34 signals for each engine revolution. This sensor monitors a plate (timing rotor) located on the crankshaft timing pulley and is used by the ECM to detect crankshaft angle and engine speed (RPM/NE). As the crankshaft timing pulley rotates through an engine revolution, this sensor communicates the rotation of the NE signal plate as a pulse signal to the ECM. Based on the signal, the ECM controls fuel injection time and ignition timing.

DTC No.	DTC Detection Condition	Trouble Area
P0335	No crankshaft position sensor signal to ECM during cranking (2 trip detection logic)	• Open or short in crankshaft position sensor circuit • Crankshaft position sensor • Signal plate (crankshaft) • ECM
	No crankshaft position sensor signal to ECM with engine speed 600 rpm or more (2 trip detection logic)	
P0339	In condition (a), (b) and (c), when no crankshaft position sensor (NE+) signal is input for 0.05 seconds or more. (a) Engine revolution 1,000 rpm or more (b) STA signal is OFF (c) 3 seconds or more has lapsed after STA signal is switched from ON to OFF.	

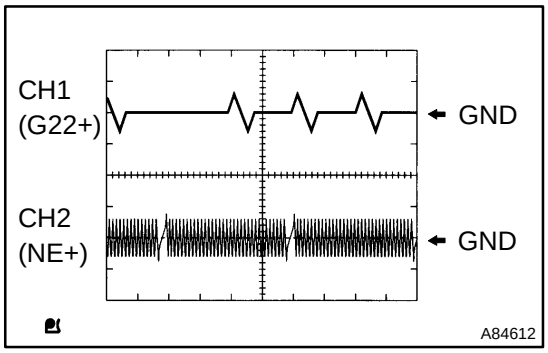

Reference: Inspection using the oscilloscope.
HINT:
The correct waveform is as shown on the left.

Item	Contents
Terminal	CH1: G22+ – NE– CH2: NE+ – NE–
Equipment Set	5V/Division, 20ms/Division
Condition	During cranking or idling

MONITOR DESCRIPTION

If there is no signal from the crankshaft sensor despite the engine revolving, the ECM interprets this as a malfunction of the sensor.

MONITOR STRATEGY

Related DTCs	P0335	Crankshaft position sensor range check or rationality
Required sensors/components	Main sensors	Crankshaft position sensor
	Related sensors	Engine speed sensor
Frequency of operation	Continuous	
Duration	Case 1: 4.7 seconds, Case 2: 0.5 second	
MIL operation	2 driving cycles	
Sequence of operation	None	

TYPICAL ENABLING CONDITIONS

Item	Specification	
	Minimum	Maximum
The monitor will run whenever the following DTCs are not present	See ”List of Disable a Monitor” (On page 05–25)	
Case 1:		
Starter	ON	
Minimum battery voltage while starter ON	–	11 V
Case 2:		
Engine speed	600 rpm	–
Starter	OFF	
Time after starter ON to OFF	3 seconds	–

TYPICAL MALFUNCTION THRESHOLDS

Detection Criteria	Threshold
Case 1:	
Engine speed signal	No signal for 4.7 seconds
Case 2:	
Engine speed signal	No signal for 0.5 second

WIRING DIAGRAM

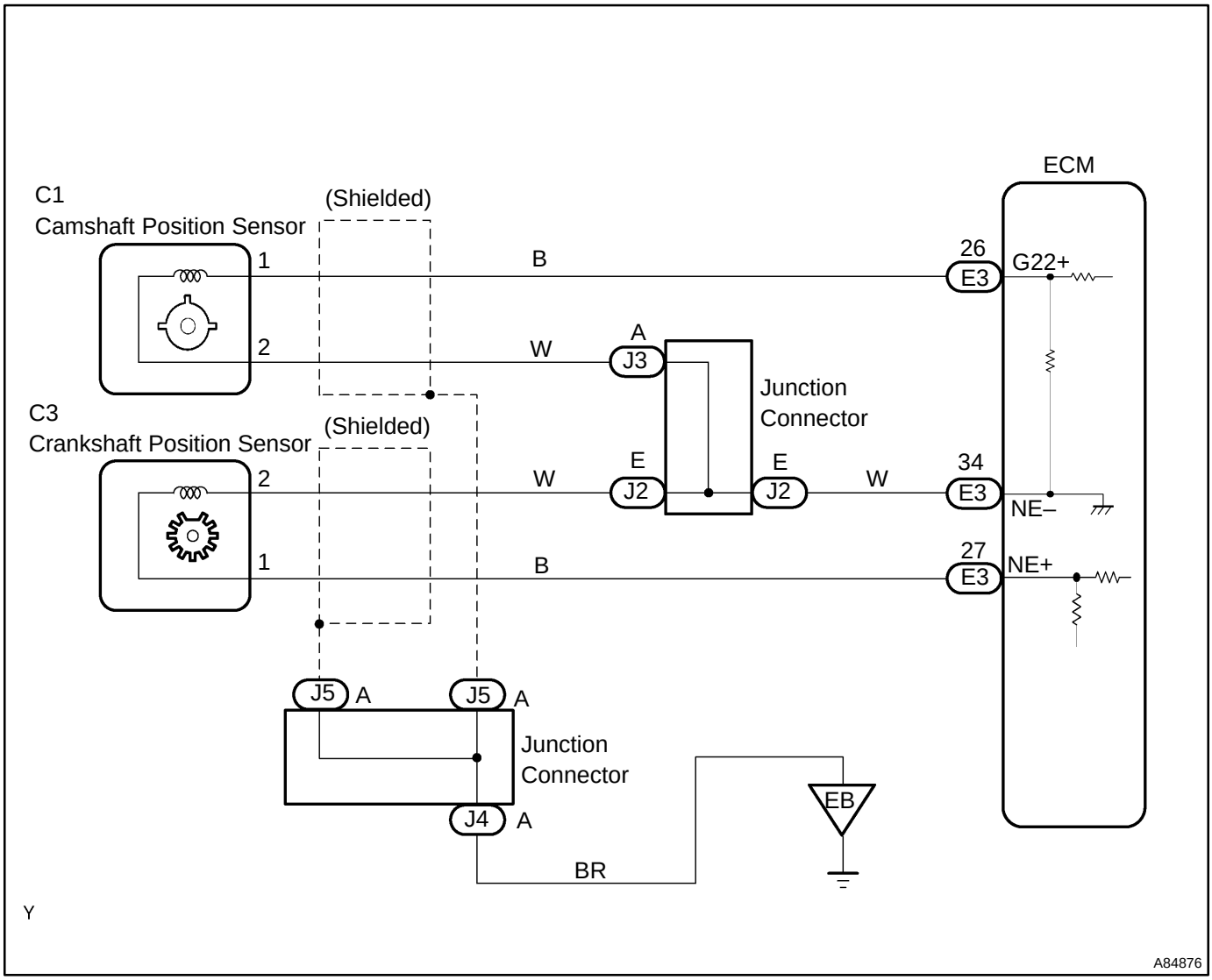

INSPECTION PROCEDURE

HINT:

- Perform the troubleshooting of DTC P0335 first. If no trouble is found, troubleshoot the engine mechanical systems.
- Read freeze frame data using the hand–held tester or the OBD II scan tool. Freeze frame data records the engine conditions when a malfunction is detected. When troubleshooting, it is useful for determining whether the vehicle was running or stopped, the engine was warmed up or not, the air–fuel ratio was lean or rich, etc. at the time of the malfunction.

- READ VALUE OF HAND–HELD TESTER OR OBD II SCAN TOOL
  (a) Connect the hand–held tester or the OBD II scan tool to the DLC3.
  (b) Start the engine and push the hand–held tester or the OBD II scan tool main switch ON.
  (c) Select the item ”DIAGNOSIS / ENHANCED OBD II / DATA LIST / ALL / ENGINE SPD”.
- The engine speed can be confirmed in DATA LIST using the hand–held tester or OBD II scan tool. If there is no NE signals from the crankshaft position sensor despite the engine revolving, the engine speed will be indicated as zero. If voltage output of the crankshaft position sensor is insufficient, the engine speed will be indicated as lower PRM (than the actual RPM).

1 INSPECT CRANKSHAFT POSITION SENSOR(RESISTANCE)

Component Side:

C3 Crankshaft Position Sensor



Front View

Y A73303

(a) Disconnect the C43crankshaft position sensor connector.
(b) Measure the resistance between the terminals of the crankshaft position sensor connector.

Standaed:

Tester Connection	Specified Condition
1 – 2	985 to 1,600 Ω at cold
	1,265 to 1,890 Ω at hot

NOTICE:

"Cold" and "Hot" shown above mean the temperature of the coils themselves. "Cold" is from –10°C (14°F) to 50 °C (122 °F) and "Hot" is from 50 °C (122 °F) to 100 °C (212 °F).

(c) Reconnect the crankshaft position sensor connector.

NG → **REPLACE CRANKSHAFT POSITION SENSOR (See page 18–2)**

OK

2 CHECK HARNESS AND CONNECTOR(CRANKSHAFT POSITION SENSOR – ECM)

Wire Harness Side:

Crankshaft Position Sensor Connector

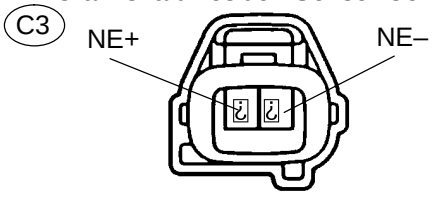

Front View

A84567

(a) Disconnect the C3 crankshaft position sensor connector.
(b) Disconnect the E3 ECM connector.
(c) Check the resistance between the wire harness side connectors.

Standard (Check for open):

Tester connection	Specified Condition
NE+ (C3–1) – NE+ (E3–27)	Below 1 Ω
NE– (C3–2) – NE– (E3–34)	

Standard (Check for short):

Tester connection	Specified Condition
NE+ (C3–1) or NE+ (E3–27) – Body ground	10 kΩ or higher
NE– (C3–2) or NE– (E3–34) – Body ground	

(d) Reconnect the ECM connector.
(e) Reconnect the crankshaft position sensor connector.

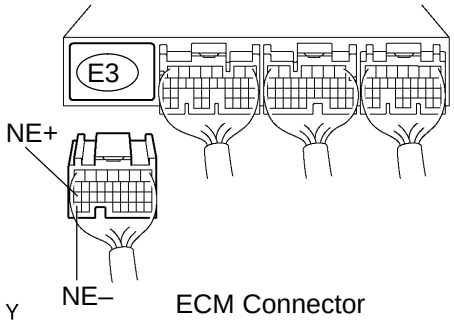

Y ECM Connector A65743

NG → **REPAIR OR REPLACE HARNESS OR CONNECTOR**

OK

3	CHECK SENSOR INSTALLATION(CRANKSHAFT POSITION SENSOR)

(a) Check the crankshaft position sensor installation .

NG → TIGHTEN SENSOR

OK

4	CHECK CRANKSHAFT POSITION SENSOR PLATE(TEETH OF SENSOR PLATE(CRANKSHAFT))

(a) Check the teeth of the sensor plate.

NG → REPLACE CRANKSHAFT POSITION SENSOR PLATE (CRANKSHAFT)

OK

REPLACE ECM (See page 10–11)

DTC	P0340	CAMSHAFT POSITION SENSOR ”A” CIRCUIT (BANK 1 OR SINGLE SENSOR)

DTC	P0341	CAMSHAFT POSITION SENSOR ”A” CIRCUIT RANGE/PERFORMANCE (BANK 1 OR SINGLE SENSOR)

CIRCUIT DESCRIPTION

The camshaft position sensor (G22+ signal) consists of a magnet, iron core and pickup coil.
The G22+ signal plate has 3 teeth on its outer circumference and is installed on the camshaft timing pulley. When the camshafts rotate, the protrusion on the signal plate and the air gap on the pickup coil changes, causing fluctuations in the magnetic field and generating an electromotive force in the pickup coil.
The NE+ signal plate (crankshaft timing pulley) has 34 teeth and is installed to the crankshaft. The NE+ signal sensor generates 34 signals at every engine revolution. The ECM detects the crankshaft angle and the engine revolution based on the NE+ signals, and the cylinder and the angle of the VVT based on the combination of the G22+ and NE+ signals.

DTC No.	DTC Detection Condition	Trouble Area
P0340	• No camshaft position sensor signal to ECM during cranking (2 trip detection logic) • No camshaft position sensor signal to ECM with engine speed 600 rpm or more (1 trip detection logic)	• Open or short in camshaft position sensor circuit • Camshaft position sensor • Camshaft timing pulley • Timing chain has jumped a tooth • ECM
P0341	While crankshaft rotates twice, camshaft position sensor signal is input to ECM 12 times or more (1 trip detection logic) • Hint: Under normal condition, the camshaft position sensor is input into the ECM 3 times per 2 engine revolutions	

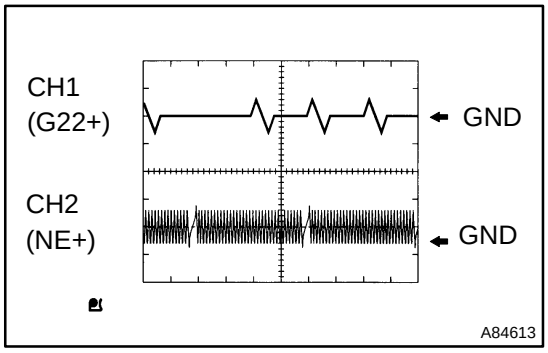

Reference: Inspection using the oscilloscope.
HINT:
The correct waveform is as shown on the left.

Item	Contents
Terminal	CH1: G22+ – NE– CH2: NE+ – NE–
Equipment Set	5V/DIV, 20ms/DIV
Condition	During cranking or idling

MONITOR DESCRIPTION

If there is no signal from the camshaft position sensor despite the engine revolving, or if the rotation of the camshaft and the crankshaft is not synchronized, the ECM interprets this as a malfunction of the sensor.

MONITOR STRATEGY

Related DTCs	P0340	Camshaft position sensor (bank 1) range check or rationality
	P0341	Camshaft position sensor (bank 1) range check or rationality
Required sensors/components	Main sensors	Camshaft position sensor
	Related sensors	Crankshaft position sensor, engine speed sensor
Frequency of operation	Continuous	
Duration	5 seconds	
MIL operation	P0340 case 2 (mis–aligned) and P0341: Immediately P0340 case 1 (no signal): 2 driving cycles	
Sequence of operation	None	

TYPICAL ENABLING CONDITIONS

Item	Specification	
	Minimum	Maximum
The monitor will run whenever the following DTCs are not present	See "List of Disable a Monitor" (On page 05–25)	
P0340 Case 1 (No signal):		
Starter	ON	
Minimum battery voltage while starter ON	–	11 V
P0340 Case 2 (Mis–aligned):		
Engine speed	600 rpm	–
Starter	OFF	
P0341:		
Engine speed	600 rpm	–
Time after restart	180°CA	–

TYPICAL MALFUNCTION THRESHOLDS

Detection Criteria	Threshold
P0340 Case 1 (No signal):	
Camshaft position sensor signal	No signal
P0340 Case 2 (Mis–aligned):	
Crankshaft/camshaft alignment is mis–aligned (judged by comparing the crankshaft position to the camshaft position)	
Camshaft position sensor signal: No input in appropriate timing.	
P0341:	
Crankshaft/Camshaft alignment	Mis–aligned
Camshaft position sensor count	12 or more / 720°CA (= Engine 2 revolutions)

COMPONENT OPERATING RANGE

Parameter	Standard Value
Camshaft position sensor signal input during every 720°CA	3

WIRING DIAGRAM

Refer to DTC P0335 on page 05–168.

INSPECTION PROCEDURE

HINT:

Read freeze frame data using the hand–held tester or the OBD II scan tool. Freeze frame data records the engine conditions when a malfunction is detected. When troubleshooting, it is useful for determining whether the vehicle was running or stopped, the engine was warmed up or not, the air–fuel ratio was lean or rich, etc. at the time of the malfunction.

1 INSPECT CAMSHAFT POSITION SENSOR(RESISTANCE)

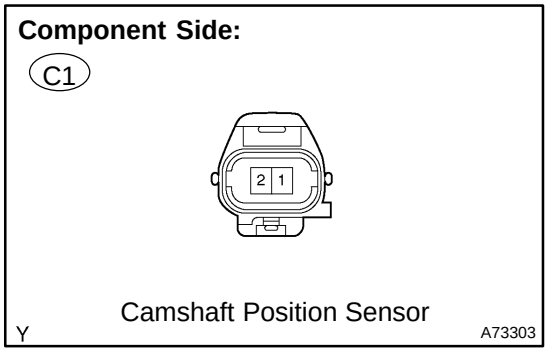

(a) Measure the resistance between the terminals of camshaft position sensor connector.

Standard:

Tester Connection	Specified Condition
1 – 2	1,630 to 2,740 Ω at cold
	2,065 to 3,225 Ω at hot

NOTICE:

"Cold" and "Hot" shown above mean the temperature of the coils themselves. "Cold" is from –10°C (14°F) to 50 °C (122 °F) and "Hot" is from 50 °C (122 °F) to 100 °C (212 °F).

NG → **REPLACE CAMSHAFT POSITION SENSOR**

OK

2 CHECK HARNESS AND CONNECTOR(CAMSHAFT POSITION SENSOR – ECM)

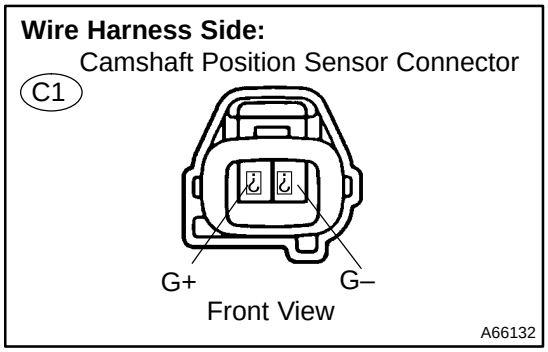

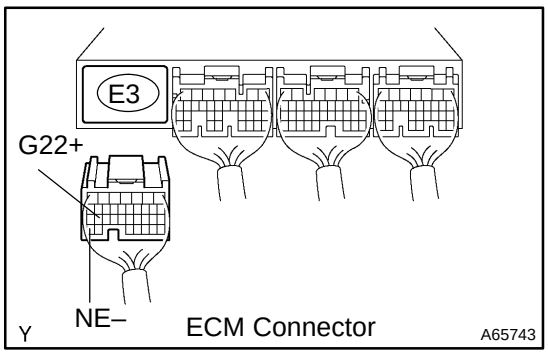

(a) Disconnect the C1 camshaft position sensor connector.

(b) Disconnect the E3 ECM connector.

(c) Check the resistance between the wire harness side connectors.

Standard (Check for open):

Tester Connection	Specified Condition
G+ (C1–1) – G22+ (E3–26)	Below 1 Ω
G– (C1–2) – NE– (E3–34)	

Standard (Check for short):

Tester Connection	Specified Condition
G+ (C1–1) or G22+ (E3–26) – Body ground	10 kΩ or higher
G– (C1–2) or NE– (E3–34) – Body ground	

(d) Reconnect the ECM connector.

(e) Reconnect the camshaft position sensor connector.

NG → **REPAIR OR REPLACE HARNESS OR CONNECTOR**

OK

3	CHECK SENSOR INSTALLATION(CAMSHAFT POSITION SENSOR)

(a) Check the camshaft position sensor installation.

NG → TIGHTEN SENSOR

OK

4	CHECK CAMSHAFT TIMING GEAR ASSY(TEETH OF PLATE)

(a) Check the teeth of the signal plate.

NG → REPLACE CAMSHAFT TIMING GEAR ASSY

OK

REPLACE ECM (See page 10–11)

DTC	P0351	IGNITION COIL ”A” PRIMARY/SECONDARY CIRCUIT

DTC	P0352	IGNITION COIL ”B” PRIMARY/SECONDARY CIRCUIT

DTC	P0353	IGNITION COIL ”C” PRIMARY/SECONDARY CIRCUIT

DTC	P0354	IGNITION COIL ”D” PRIMARY/SECONDARY CIRCUIT

CIRCUIT DESCRIPTION

HINT:

- These DTCs indicate a malfunction related to the primary circuit.
- If DTC P0351 is displayed, check the No.1 ignition coil with igniter circuit.
- If DTC P0352 is displayed, check the No.2 ignition coil with igniter circuit.
- If DTC P0353 is displayed, check the No.3 ignition coil with igniter circuit.
- If DTC P0354 is displayed, check the No.4 ignition coil with igniter circuit.

A Direct Ignition System (DIS) is used on this vehicle. The DIS improves the ignition timing accuracy, reduces high–voltage loss, and enhances the overall reliability of the ignition system by eliminating the distributor. The DIS is a 1–cylinder ignition system which ignites one cylinder with one ignition coil. In the 1–cylinder ignition system, the one spark plug is connected to the end of the secondary winding. High voltage generated in the secondary winding is applied directly to the spark plug. The spark of the spark plug passes from the center electrode to the ground electrode.

The ECM determines the ignition timing and outputs the ignition signals (IGT) for each cylinder. Using the ignition (IGT) signal, the ECM turns on and off the power transistor inside the igniter and this switches on and off the current to the primary coil. When the current flow to the primary coil is cut off, high–voltage is generated in the secondary coil and this voltage is applied to the spark plugs to spark inside the cylinders. As the ECM cuts the current to the primary coil, the igniter sends back the ignition confirmation (IGF) signal for each cylinder ignition to the ECM.

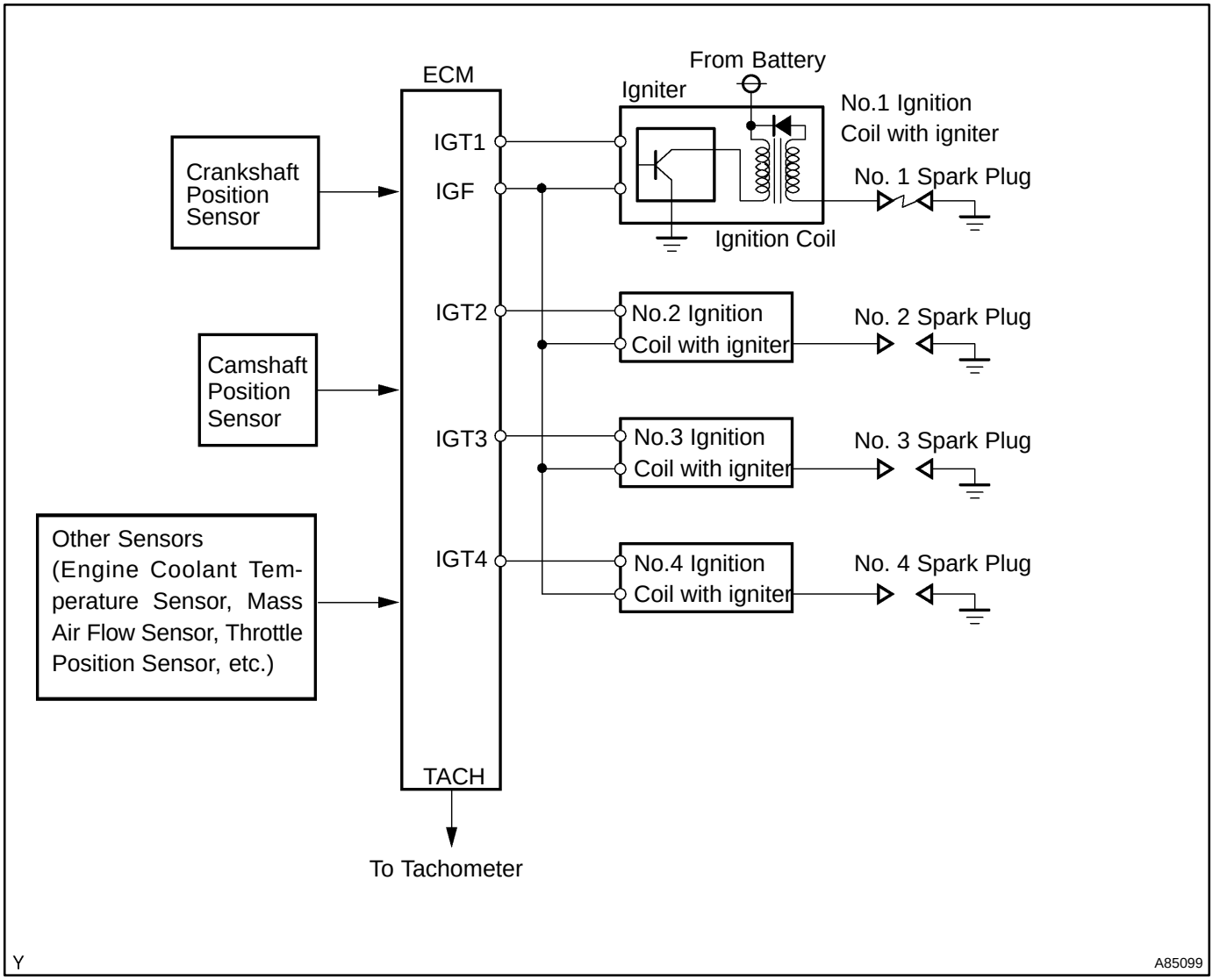

DTC No.	DTC Detection Condition	Trouble Area
P0351 P0352 P0353 P0354	No IGF signal to ECM while engine is running	• Ignition system • Open or short in IGF or IGT circuit from ignition coil with igniter to ECM (ignition coil circuit 1 through 4) • Ignition coil with igniter (ignition coil circuit 1 through 4) • ECM

MONITOR DESCRIPTION

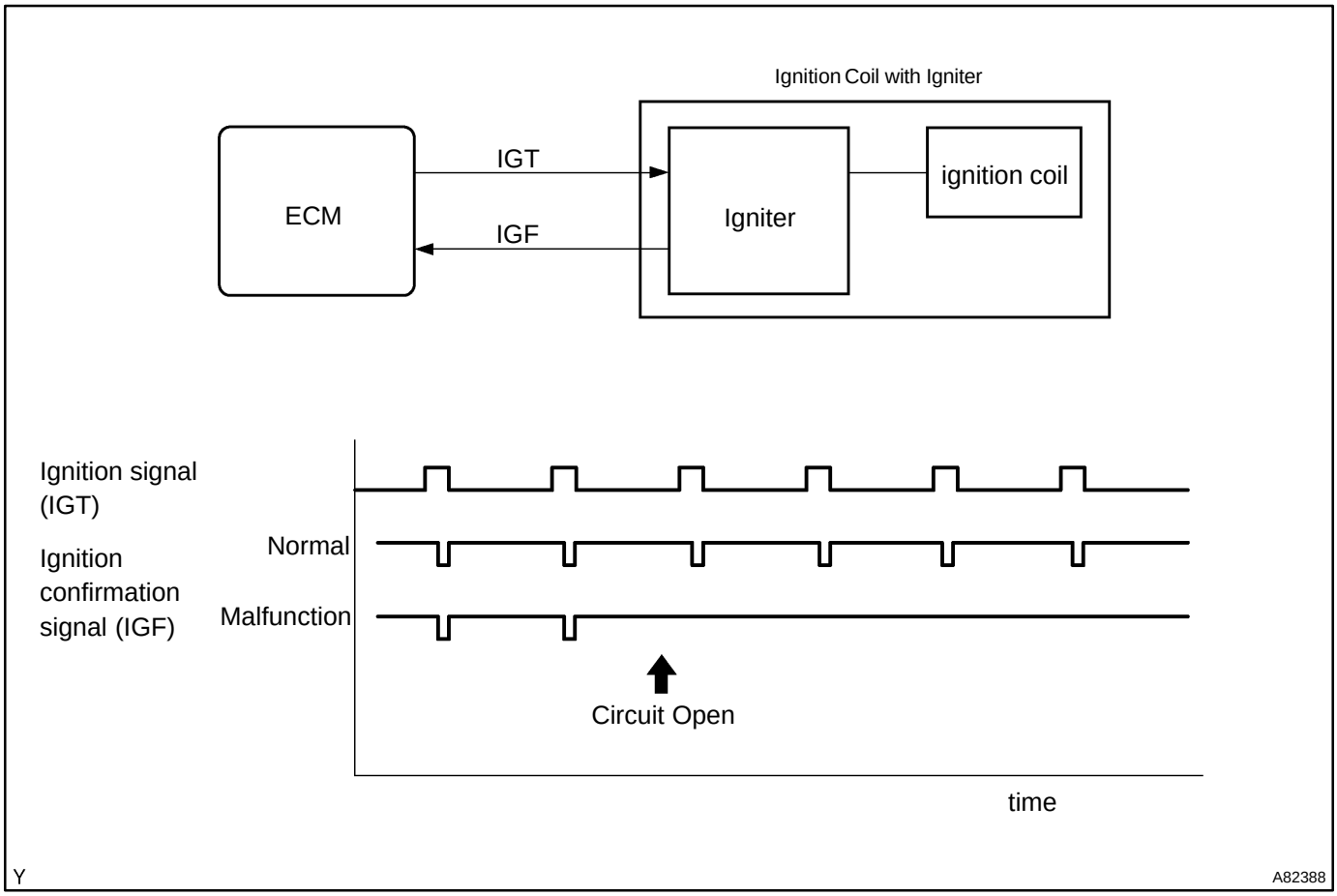

If the ECM does not receive the ignition confirmation signal (IGF) after sending the ignition signal (IGT), it interprets this as a fault in the igniter and sets a DTC.

MONITOR STRATEGY

Related DTCs	P0351	No. 1 ignition coil with igniter circuit malfunction
	P0352	No. 2 ignition coil with igniter circuit malfunction
	P0353	No. 3 ignition coil with igniter circuit malfunction
	P0354	No. 4 ignition coil with igniter circuit malfunction
Required sensors/components	Igniter	
Frequency of operation	Continuous	
Duration	0.256 seconds	
MIL operation	Immediately	
Sequence of operation	None	

TYPICAL ENABLING CONDITIONS

Item	Specification	
	Minimum	Maximum
The monitor will run whenever the following DTCs are not present	See "List of Disable a Monitor" (On page 05–25)	
Engine speed	–	1,500 rpm
Following condition is met:	(a) or (b)	
(a) Following conditions are met:	1 and 2	
1. Engine speed	–	500 rpm
2. Battery voltage	6 V	–
(b) Following conditions are met:	1 and 2	
1. Engine speed	500 rpm	–
2. Battery voltage	10 V	–

TYPICAL MALFUNCTION THRESHOLDS

Detection Criteria	Threshold
Ignition signal fail count	More than 2 times
"Ignition signal fail count" works as follows:	When IGF should have returned despite sending IGT

COMPONENT OPERATING RANGE

Standard Value
Confirmed signal number equals ignition signal number

WIRING DIAGRAM

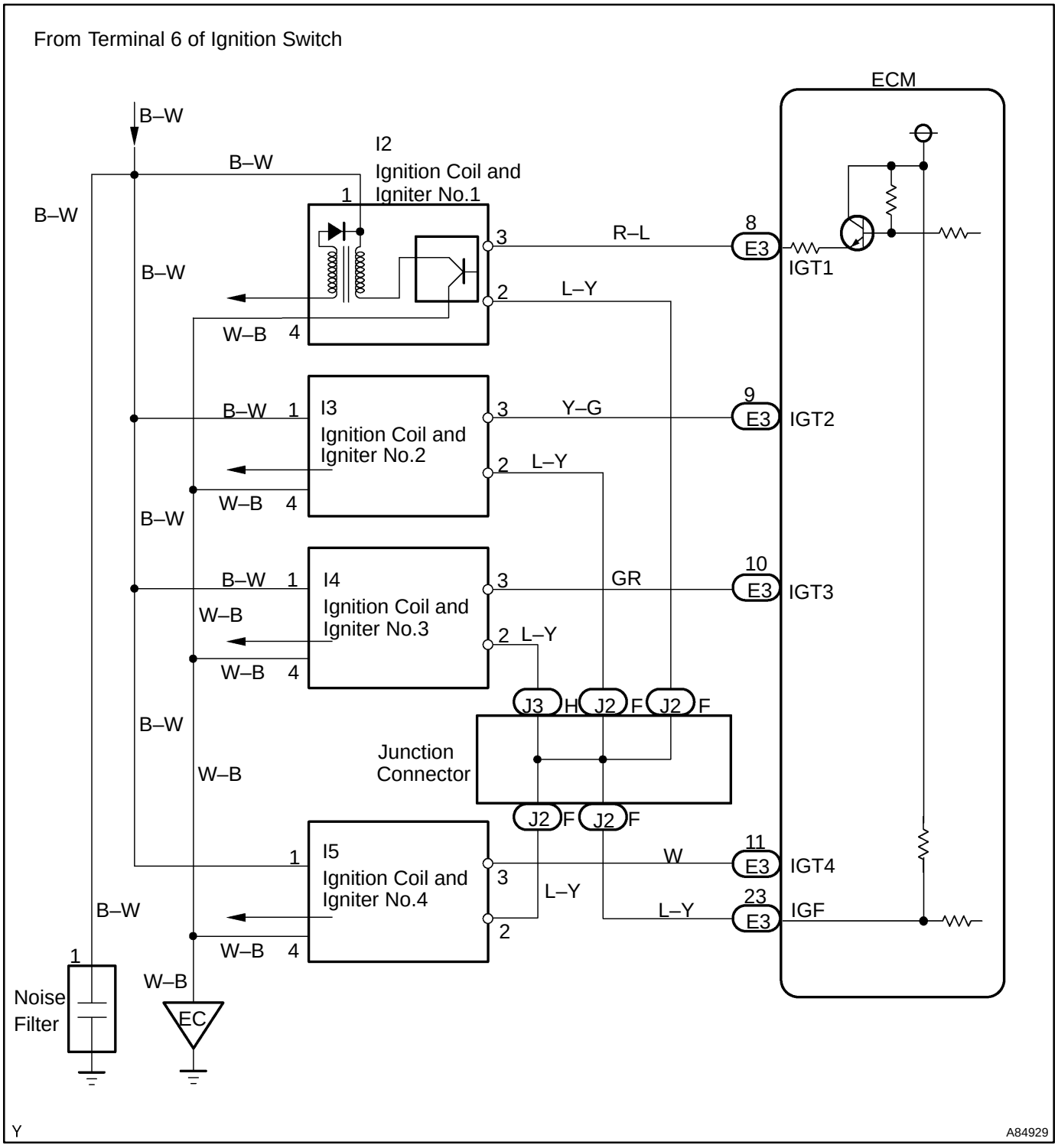

INSPECTION PROCEDURE

HINT:

Read freeze frame data using the hand–held tester or the OBD II scan tool. Freeze frame data records the engine conditions when a malfunction is detected. When troubleshooting, it is useful for determining whether the vehicle was running or stopped, the engine was warmed up or not, the air–fuel ratio was lean or rich, etc. at the time of the malfunction.

1 PERFORM SIMULATION TEST

(a) Clear the DTC (See page 05–9)

(b) Shuffle arrangement of the ignition coil and igniters.

NOTICE:

Do not shuffle the connectors.

(c) Perform the simulation test.

Result:

Display (DTC output)	Proceed to
The same DTC is output again	A
The other DTC is output	B

B → **REPLACE IGNITION COIL ASSY (See page 18–2)**

A

2 INSPECT ECM(IGT1, IGT2, IGT3, IGT4 AND IGF SIGNAL)

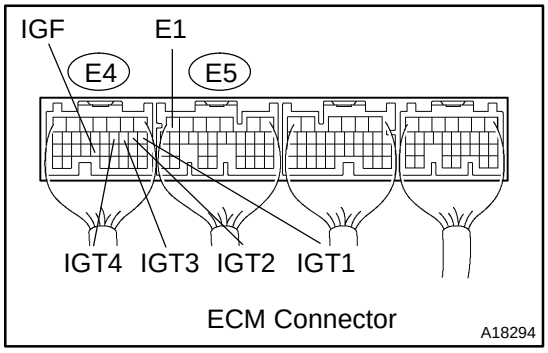

(a) Inspection using the oscilloscope.

(b) During cranking or idling, check the waveform between terminals IGT1 to IGT4 and E1, IGF and E1 of the ECM connector.

Standard:

Item	Contents
Terminal	CH1: IGT1, IGT2, IGT3, IGT4 – E1 CH2: IGF – E1
Equipment Setting	2V/Division, 20ms/Division
Condition	While the engine is cranking or idling

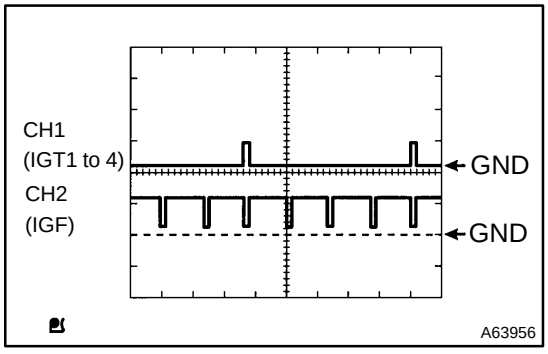

HINT:

Correct waveform is as shown in the diagram on the left.

NG → **REPLACE ECM (See page 10–11)**

OK

3 CHECK HARNESS AND CONNECTOR(IGNITION COIL ASSY – ECM)

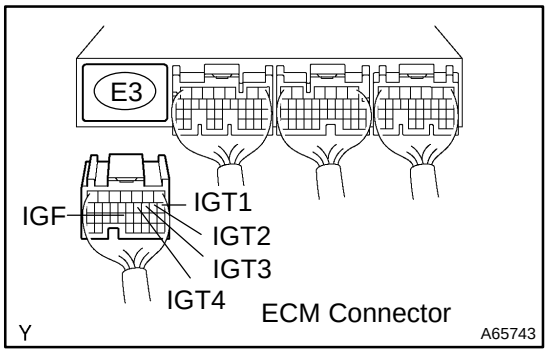

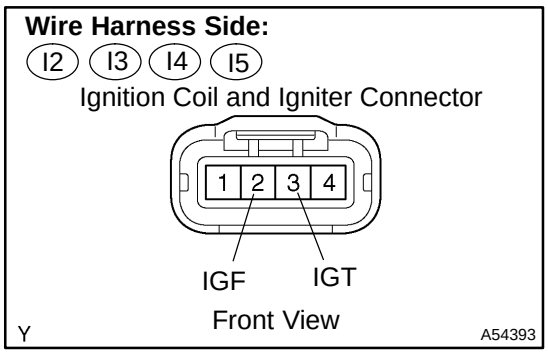

(a) Disconnect the I2, I3, I4 or I5 ignition coil and igniter connector.

(b) Disconnect the E3 ECM connector.

(c) Check the resistance between the wire harness side connectors.

Standard (Check for open):

Tester Connection	Specified Condition
IGF (I2–2) – IGF (E3–23)	Below 1 Ω
IGF (I3–2) – IGF (E3–23)	
IGF (I4–2) – IGF (E3–23)	
IGF (I5–2) – IGF (E3–23)	

Standard (Check for open):

Tester Connection	Specified Condition
IGT (I2–3) – IGT1 (E3–8)	Below 1 Ω
IGT (I3–3) – IGT2 (E3–9)	
IGT (I4–3) – IGT3 (E3–10)	
IGT (I5–3) – IGT4 (E3–11)	

Standard (Check for short):

Tester Connection	Specified Condition
IGF (I2–2) or IGF (E3–23) – Body ground	10 kΩ or higher
IGF (I3–2) or IGF (E3–23) – Body ground	
IGF (I4–2) or IGF (E3–23) – Body ground	
IGF (I5–2) or IGF (E3–23) – Body ground	

Standard (Check for short):

Tester Connection	Specified Condition
IGT (I2–3) or IGT1 (E3–8) – Body ground	10 kΩ or higher
IGT (I3–3) or IGT2 (E3–9) – Body ground	
IGT (I4–3) or IGT3 (E3–10) – Body ground	
IGT (I5–3) or IGT4 (E3–11) – Body ground	

(d) Reconnect the ECM connector.

(e) Reconnect the ignition coil and igniter connector.

NG → **REPAIR OR REPLACE HARNESS OR CONNECTOR**

OK

4 INSPECT IGNITION COIL ASSY(POWER SOURCE)

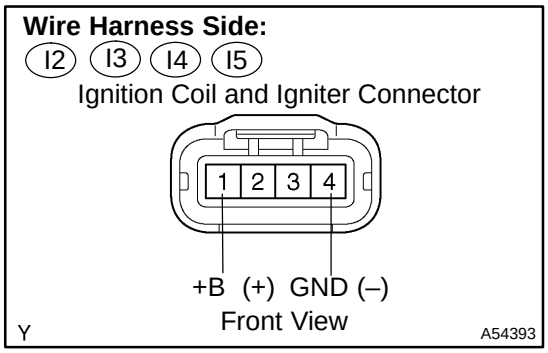

(a) Disconnect the I2, I3, I4 or I5 ignition coil and igniter connector.

(b) Check the resistance between the wire harness side connectors.

Standard (Check for open):

Tester Connection	Specified Condition
GND (I1–4) – Body ground	Below 1 Ω
GND (I2–4) – Body ground	
GND (I3–4) – Body ground	
GND (I4–4) – Body ground	

(c) Turn the ignition switch ON position.

(d) Measure the voltage between the terminal of the wire harness side connector and body ground.

Standard:

Tester Connection	Specified Condition
+B (I2–1) – GND (I2–4)	9 to 14 V
+B (I3–1) – GND (I3–4)	
+B (I4–1) – GND (I4–4)	
+B (I5–1) – GND (I5–4)	

(e) Reconnect the ignition coil and igniter connector.

OK → **REPLACE IGNITION COIL ASSY (See page 18–2)**

NG

5 CHECK HARNESS AND CONNECTOR(IGNITION COIL ASSY – IGNITION SWITCH)

Wire Harness Side:

(I2) (I3) (I4) (I5)

Ignition Coil and Igniter Connector

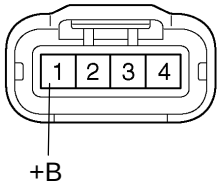

Front View

Y

A54393

Wire Harness Side:

(I10) Ignition Switch Connector

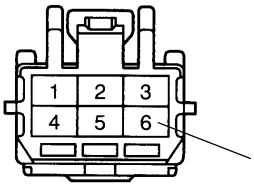

Front View

A66267

(a) Disconnect the I2, I3, I4 or I5 ignition coil and igniter connector.

(b) Disconnect the I10 ignition switch connector.

(c) Check the resistance between the wire harness side connectors.

Standard (Check for open):

Tester Connection	Specified Condition
+B (I2–1) – IG2 (I10–6)	Below 1 Ω
+B (I3–1) – IG2 (I10–6)	
+B (I4–1) – IG2 (I10–6)	
+B (I5–1) – IG2 (I10–6)	

Standard (Check for short):

Tester Connection	Specified Condition
+B (I2–1) or IG2 (I10–6) – Body ground	10 kΩ or higher
+B (I3–1) or IG2 (I10–6) – Body ground	
+B (I4–1) or IG2 (I10–6) – Body ground	
+B (I5–1) or IG2 (I10–6) – Body ground	

(d) Reconnect the ignition coil and igniter connector.

(e) Reconnect the ignition switch connector.

NG → **REPAIR OR REPLACE HARNESS OR CONNECTOR**

OK

REPLACE IGNITION COIL ASSY (See page 18–2)

DTC	P0420	CATALYST SYSTEM EFFICIENCY BELOW THRESHOLD (BANK 1)

CIRCUIT DESCRIPTION

The ECM compares the two waveforms of the heated oxygen sensors located before and after the catalyst to determine whether or not the catalyst performance has deteriorated.
Air–fuel ratio feedback compensation keeps the waveform of the heated oxygen sensor in front of the catalyst alternates between back and forth, from rich to lean.
If the catalyst is functioning normally, the waveform of the heated oxygen sensor behind the catalyst switches back and forth between rich and lean much more slowly than the waveform of the heated oxygen sensor in front of the catalyst.
When both waveforms change at a similar rate, it indicates that the catalyst performance has deteriorated.

MONITOR DESCRIPTION

The vehicle is equipped with the two oxygen sensors (O2S). One is mounted upstream from the three–way catalytic (TWC) converter (front heated oxygen sensor ”sensor 1”), the second is mounted downstream (heated oxygen sensor ”sensor 2”). The catalyst efficiency monitor compares the sensor 1 and 2 signals in order to calculate TWC ability to store oxygen.
During normal operation, the TWC stores and releases oxygen as needed. This results in low oxygen variations in the post TWC exhaust stream as shown.

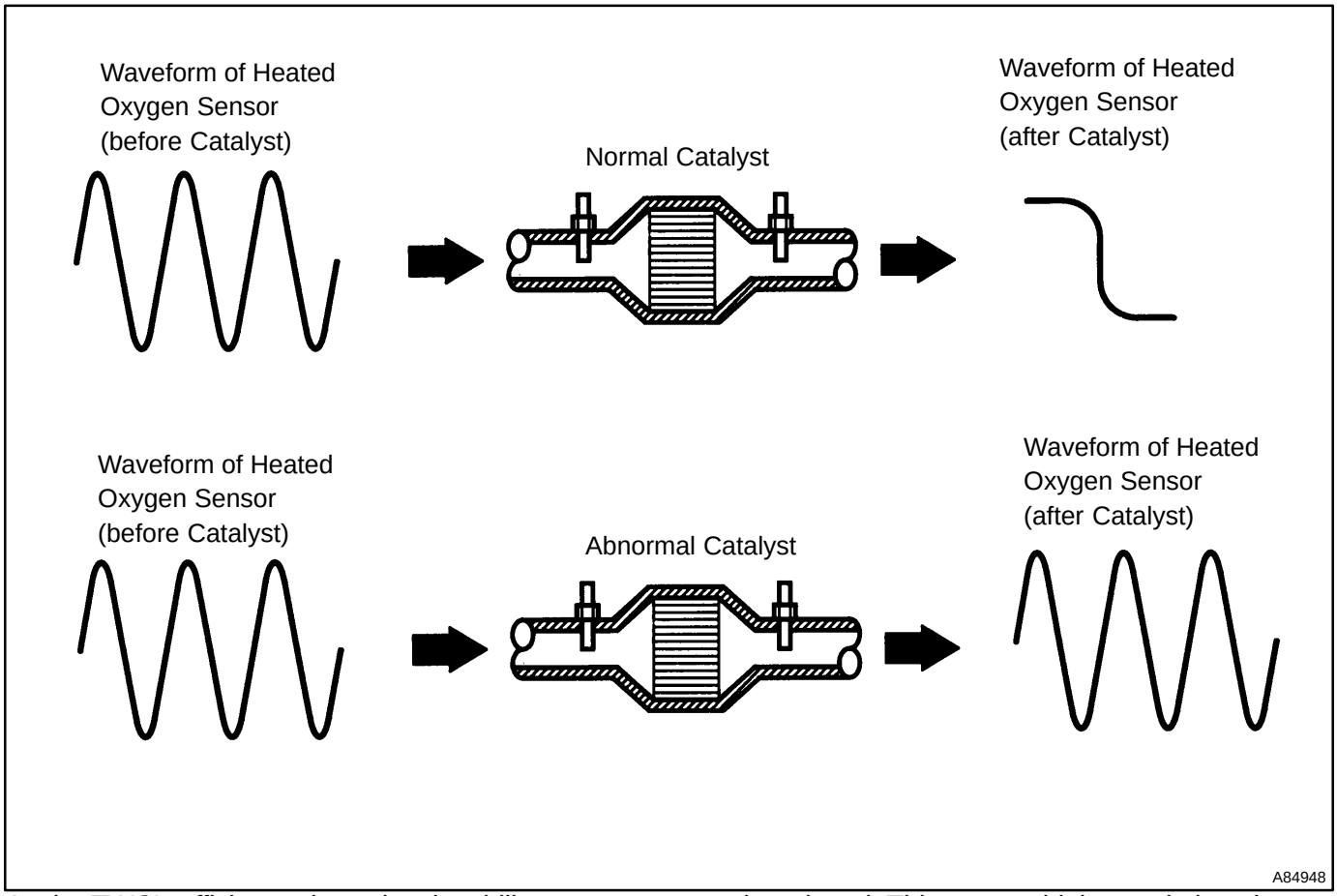

As the TWC’s efficiency degrades, its ability to store oxygen is reduced. This causes higher variations in post TWC exhaust stream oxygen content and results in increased sensor 2 signal activity as shown.
When running the monitor, the ECM compares sensor1 and sensor 2 signals over a specific time to determine the TWC efficiency. The ECM begins by calculating the signal length for both sensors.

Heated Oxygen Sensor Signal Length:

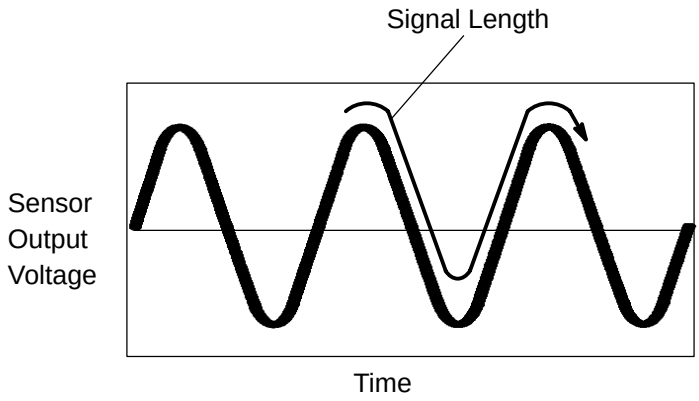

A82718

DTC No.	DTC Detection Condition	Trouble Area
P0420	After engine and catalyst are warmed up, and while vehicle is driven within set vehicle and engine speed range, waveforms of heated oxygen sensors have same amplitude (2 trip detection logic)	• Gas leakage in exhaust system • Heated oxygen sensor (bank 1 sensor 1, 2) • Three–way catalytic converter

MONITOR STRATEGY

Related DTCs	P0420	Bank 1 catalyst is deterioration
Required sensors/components	Main sensors	Front and rear heated oxygen sensor
	Related sensors	Mass air flow sensor, engine coolant temperature sensor, engine speed sensor, intake air temperature sensor
Frequency of operation	Once per driving cycle	
Duration	90 seconds	
MIL operation	2 driving cycles	
Sequence of operation	None	

TYPICAL ENABLING CONDITIONS

Item	Specification	
	Minimum	Maximum
The monitor will run whenever the following DTCs are not present	See ”List of Disable a Monitor” (On page 05–25)	
Battery voltage	11 V	–
Intake air temperature	–10°C (14°F)	–
Idle	OFF	
Intake air amount	8.5 g/sec	25 g/sec
Engine speed	–	4,000 rpm
Engine coolant temperature	75°C (167°F)	–
Estimated catalyst temperature conditions are met:	1 and 2	
1. Upstream catalyst	500°C (932°F)	900°C (1,472°F)
2. Downstream catalyst	350°C (932°F)	900°C (1,472°F)
Fuel system status	Closed loop	

TYPICAL MALFUNCTION THRESHOLDS

Detection Criteria	Threshold
Catalyst deterioration level	0.6 or more
Number of times detection	3 times

COMPONENT OPERATING RANGE

Parameter	Standard Value
Catalyst deterioration level (heated oxygen sensor signal length)	0 to 0.1

MONITOR RESULT (MODE 06 DATA)

Test ID	Comp ID	Description of Test Data	Description of Test Limit	Unit	Conversion Factor
$01	$01	Catalyst deterioration (bank 1) level determined by waveforms of the heated oxygen sensor.	Malfunction criteria for catalyst deterioration	–	Multiply by 0.007812 (no dimension)

Refer to page 05–27 for detailed information on Checking Monitor Status.

CONFIRMATION DRIVING PATTERN

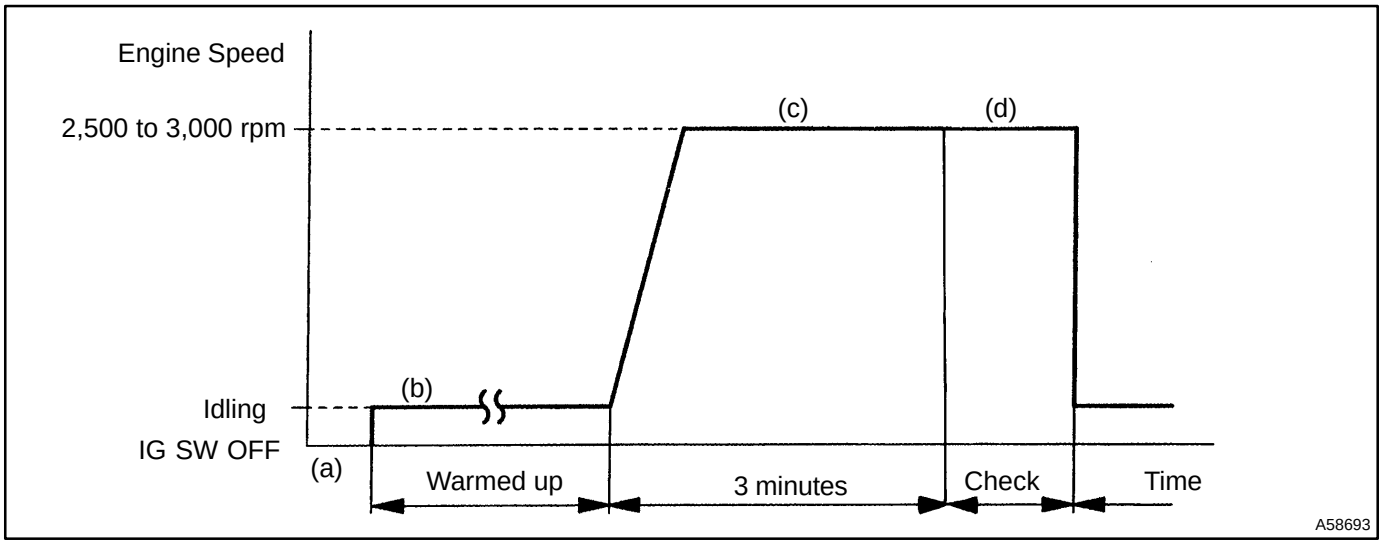

(a) Connect the hand–held tester to the DLC3, or connect the probe of the oscilloscope between terminals OX1A, OX1B and E1 of the ECM connector.
(b) Start the engine and warm it up with all the accessories switched OFF until the engine coolant temperature becomes stable.
(c) Run the engine at 2,500 to 3,000 rpm for about 3 minutes.
(d) After confirming that the waveform of the bank 1 sensor 1 (OX) which oscillates between 0 V and 1 V under a feedback to the ECM, check the waveform of the bank 1 sensor 2 (OX).

HINT:

If there is malfunction in the system, the waveform of ”sensor 2” (OXL2) may become a similar to the one of ”sensor1” (OXL1) shown in the diagram on the left.

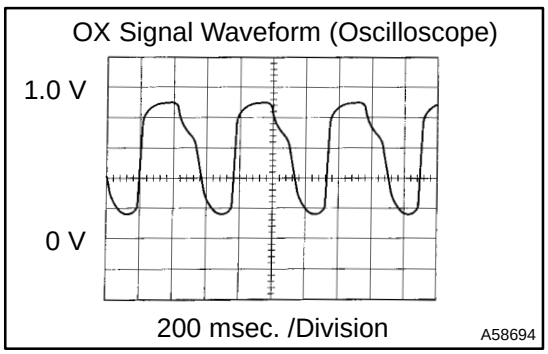

INSPECTION PROCEDURE

HINT:

Read freeze frame data using the hand−held tester or the OBD II scan tool. Freeze frame data records the engine conditions when a malfunction is detected. When troubleshooting, it is useful for determining whether the vehicle was running or stopped, the engine was warmed up or not, the air–fuel ratio was lean or rich, etc. at the time of the malfunction.

1	CHECK OTHER DTC OUTPUT(IN ADDITION TO DTC P0420)

(a) Connect the hand–held tester or the OBD II scan tool to the DLC3.
(b) Turn the ignition switch ON and push the hand–held tester or the OBD II scan tool main switch ON.
(c) Select the item ”DIAGNOSIS / ENHANCED OBD II / DTC INFO / CURRENT CODES”.
(d) Read the DTCs.

Result:

Display (DTC output)	Proceed to
P0420	A
P0420 and other DTCs	B

HINT:

If any other codes besides P0420 are output, perform the troubleshooting for those DTCs first.

B → **GO TO RELEVANT DTC CHART (See page 05–35)**

A

2	CHECK FOR EXHAUST GAS LEAKAGE

NG → **REPAIR OR REPLACE EXHAUST GAS LEAKAGE POINT (See page 15–2)**

OK

3	INSPECT HEATED OXYGEN SENSOR(BANK 1 SENSOR 1) (See page 05–101)

Refer to the hint below.

NG → **REPLACE HEATED OXYGEN SENSOR**

OK

4	INSPECT HEATED OXYGEN SENSOR(BANK 1 SENSOR 2) (See page 05–128)

Refer to the hint below.

NG → **REPLACE HEATED OXYGEN SENSOR**

OK

REPLACE THREE–WAY CATALYTIC CONVERTER(EXHAUST MANIFOLD)

HINT:

Hand–held tester only:

- The following procedure enables the technician to identify a trouble area if malfunction in both front and rear heated oxygen sensors other than the catalyst converter, or the malfunction that indicates the actual air–fuel ratio extremely RICH or LEAN.
- Narrowing down the trouble area is possible by performing ”A/F CONTROL” ACTIVE TEST (heated oxygen sensor or other trouble areas can be distinguished).

(a) Perform ACTIVE TEST using hand–held tester (A/F CONTROL).

HINT:

”A/F CONTROL” is ACTIVE TEST which changes the injection volume –12.5 % or +25 %.

(1) Connect the hand–held tester to the DLC3 on the vehicle.
(2) Turn the ignition switch ON.
(3) Warm up the engine by running the engine speed at 2,500 rpm for approximately 90 seconds.
(4) Select the item ”DIAGNOSIS / ENHANCED OBD II / ACTIVE TEST / A/F CONTROL”.
(5) Perform ”A/F CONTROL” with the engine in an idle condition (press the right or left button).

Result:

Heated oxygen sensor reacts in accordance with increase and decrease of injection volume
+25 % → rich output: More than 0.5 V,
–12.5 % → lean output: Less than 0.4 V

NOTICE:

There is a delay of few seconds in the sensor 1 (front sensor) output, and there is about 20 seconds delay at maximum in the sensor 2 (rear sensor).

	Output voltage of heated oxygen sensor (sensor 1: front sensor)	Output voltage of heated oxygen sensor (sensor 2: rear sensor)	Mainly suspect trouble area
Case 1	Injection volume +25 % –12.5 % Output voltage More than 0.5 V Less than 0.4 V **OK**	Injection volume +25 % –12.5 % Output voltage More than 0.5 V Less than 0.4 V **OK**	—
Case 2	Injection volume +25 % –12.5 % Output voltage No reaction **NG**	Injection volume +25 % –12.5 % Output voltage More than 0.5 V Less than 0.4 V **OK**	Sensor 1: front sensor (sensor 1, heater, sensor 1 circuit)
Case 3	Injection volume +25 % –12.5 % Output voltage More than 0.5 V Less than 0.4 V **OK**	Injection volume +25 % –12.5 % Output voltage No reaction **NG**	Sensor 2: rear sensor (sensor 2, heater, sensor 2 circuit)
Case 4	Injection volume +25 % –12.5 % Output voltage No reaction **NG**	Injection volume +25 % –12.5 % Output voltage No reaction **NG**	Extremely rich or lean actual air–fuel ratio (Injector, fuel pressure, gas leakage in exhaust system, etc.)

The following of A/F CONTROL procedure enables the technician to check and graph the voltage outputs of both the heated oxygen sensors.
For displaying the graph indication, enter ”ACTIVE TEST / A/F CONTROL / USER DATA”, then select ”O2S B1S1 and O2S B1S2” by pressing ”YES” button and push ”ENTER” button before pressing ”F4” button.

DTC	P0441	EVAPORATIVE EMISSION CONTROL SYSTEM INCORRECT PURGE FLOW

DTC	P0446	EVAPORATIVE EMISSION CONTROL SYSTEM VENT CONTROL CIRCUIT

CIRCUIT DESCRIPTION

The vapor pressure sensor, VSV for canister closed valve (CCV), VSV for pressure switching valve are used to detect abnormalities in the evaporative emission control system.

The ECM decides whether there is an abnormality in the evaporative emission control system based on the vapor pressure sensor signal.

DTCs P0441 and P0446 are recorded by the ECM when evaporative emissions leak from the components within the dotted line in Fig. 1 below, or when there is malfunction in both VSV for EVAP and VSV for pressure switching valve, or in the vapor pressure sensor itself.

Fig. 1

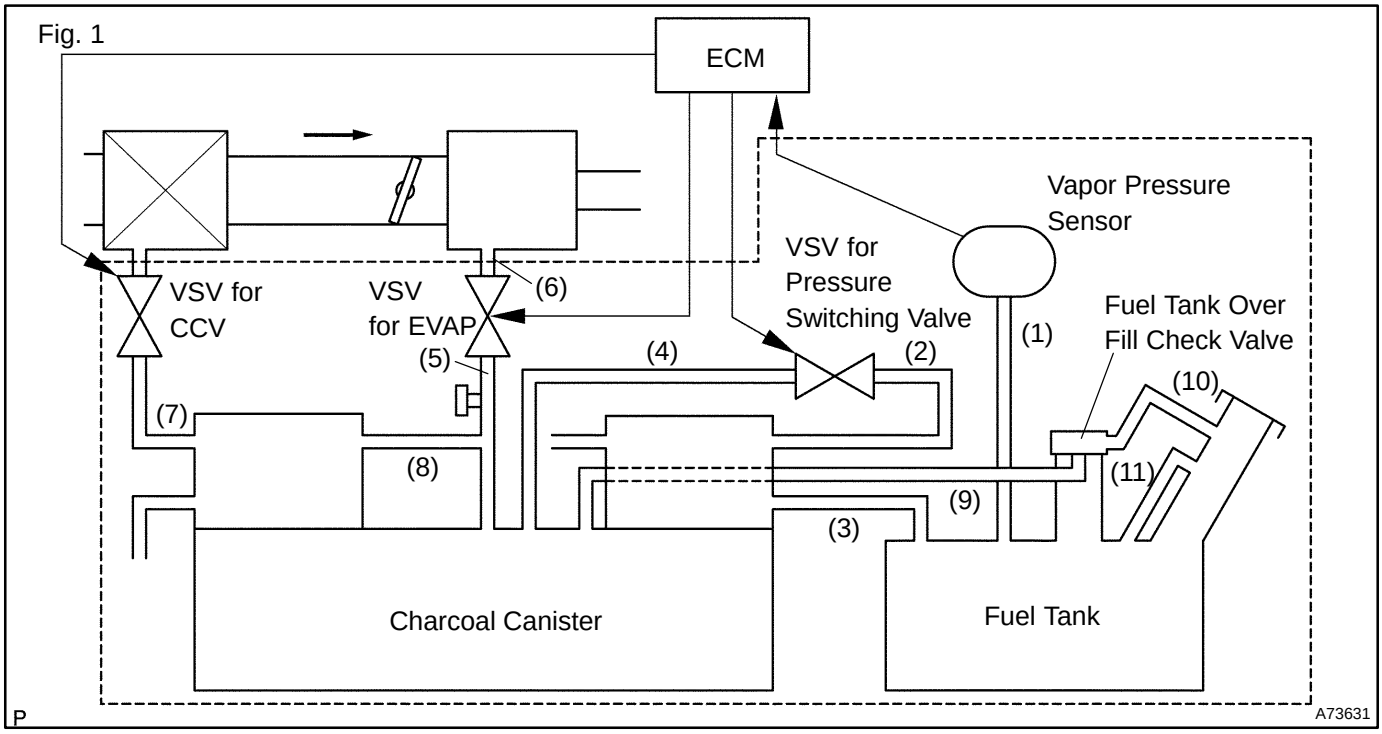

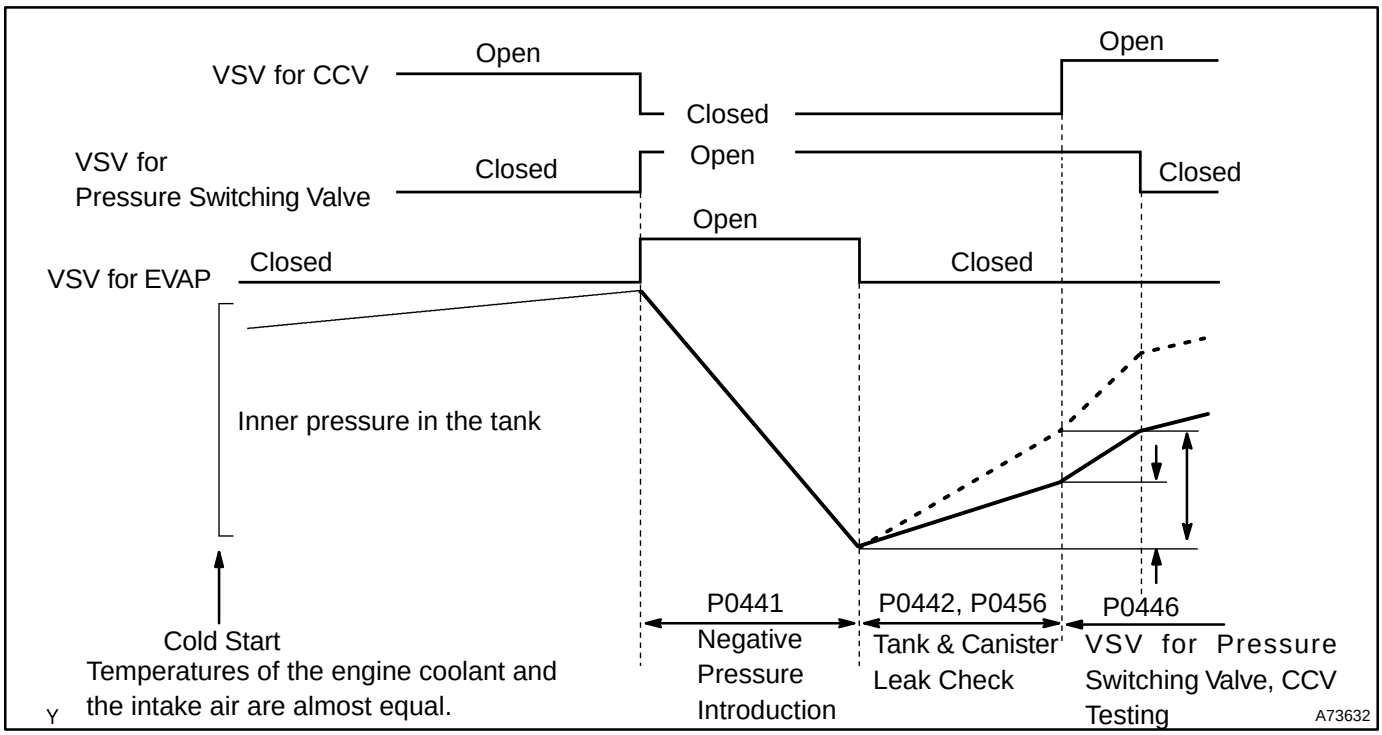

DTC No.	DTC Detecting Condition	Trouble Area
P0441	Pressure in charcoal canister and fuel tank does not drop during purge control (2 trip detection logic)	• Fuel tank cap incorrectly installed • Fuel tank cap is cracked or damaged • Vacuum hose is cracked, holed, blocked, damaged or disconnected ((1), (2), (3), (4), (5), (6), (7), (8), (9), (10) and (11) in Fig. 1) • Open or short in vapor pressure sensor circuit • Vapor pressure sensor • Open or short in VSV circuit for EVAP • VSV for EVAP • Open or short in VSV circuit for CCV • VSV for CCV • Open or short in VSV circuit for pressure switching valve • VSV for pressure switching valve • Fuel tank is cracked, holed or damaged • Charcoal canister is cracked, holed or damaged • Fuel tank over fill check valve is cracked or damaged • ECM
	During purge cut–off, pressure is very low compared with atmospheric pressure (2 trip detection logic)	
P0446	No rising the fuel tank pressure when commanding the CCV open after an EVAP leak test	
	No changing the fuel tank pressure when commanding the pressure switching valve for the check after the EVAP leak test	
	A high negative pressure (vacuum) does not occurs in the system when commanding the VSV for EVAP open with the CCV closed	

HINT:

Typical DTC output of each trouble part.

Trouble part		Typical DTC output (*1)
Small Leak		P0442 and/or P0456 (*2)
Medium Leak (ex: Vacuum hose loose)		P0442
Large Leak (ex: Fuel tank cap loose)		P0441 and P0442 and P0446
VSV for EVAP	Open Malfunction	P0441
	Close Malfunction	P0441 and P0442 and P0446
VSV for CCV	Open Malfunction	P0441 and P0442 and P0446
	Close Malfunction	P0446
VSV for Pressure Switching	Open Malfunction	P0446
	Close Malfunction	P0441 and P0442 and P0446

*1: ECM may output some other DTCs combination.

*2: Refer to P0442 and P0456 on page 05–218.

MONITOR DESCRIPTION

P0441

The ECM checks for a stuck closed malfunction in the VSV for EVAP by commanding it to open with the CCV closed. If a high negative pressure does not develop inthe fuel tank, the ECM determines that the VSV for EVAP remains closed. The ECM turns on the MIL and a DTC is set.
The ECM checks for VSV for EVAP ”stuck open” fault by commanding both valves (VSV for EVAP and CCV) to close at a time when the fuel tank is at atmospheric pressure. If the fuel tank develops a high negative pressure at this early stage of the test, the ECM determines that the VSV for EVAP is stuck OPEN.
The ECM will turn on the MIL and a DTC is set.

P0446

If there is a malfunction detected in the VSV for evaporative emission (EVAP), the canister closed valve (CCV) and the VSV for bypass valve; the ECM will illuminate the MIL and set a DTC.
This portion of the EVAP diagnosis checks the following EVAP system functions:

(a) CCV stuck closed.
The ECM checks for a CCV ”stuck closed” malfunction by commanding the CCV to open after an EVAP leak test. If the fuel tank pressure does not rise (lose vacuum), the ECM determines that the CCV is stuck closed. The ECM will turn on the MIL and a DTC is set.

(b) VSV for pressure switching valve stuck closed.
The ECM checks for a VSV for pressure switching valve ”stuck closed” malfunction by commanding the VSV for pressure switching valve to close after an EVAP leak test. If the fuel tank pressure does not change, the ECM determines that the VSV for pressure switching valve is malfunctioning. The ECM will turn on the MIL and a DTC is set.

(c) VSV for EVAP (Purge line to intake manifold) stuck closed.
The ECM checks for a stuck closed malfunction in the VSV for EVAP by commanding it to open with the CCV closed. If a high negative pressure does not develop inthe fuel tank, the ECM determines that the VSV for EVAP remains closed. The ECM turns on the MIL and a DTC is set.

MONITOR STRATEGY

DTCs	P0441	VSV for EVAP malfunction
	P0446	Canister close valve stuck closed VSV for pressure switching valve malfunction VSV for EVAP malfunction
Required sensors/components	Main	Vapor pressure sensor
	Sub	Engine coolant temperature sensor, intake air temperature sensor, vehicle speed sensor
Frequency of operation	Once per drive cycle	
Duration	P0441 : 90 seconds P0446 : 10 seconds	
MIL operation	2 drive cycles	
Sequence of operation	None	

TYPICAL ENABLING CONDITIONS

Item	Criteria	
	Minimum	Maximum
The monitor will run whenever the following DTCs are not present	See "List of Disable a Monitor" (On page 05–25)	
The same as that for DTC P0442		

TYPICAL MALFUNCTION THRESHOLDS

P0441

Detection Criteria	Threshold
Following conditions (a) and (b) are met:	–
(a) Fuel tank pressure is –1.6 kPa (–12 mmhg) or more at the vacuum introduction start	–
(b) Difference between the fuel tank pressures at the vacuum introduction start and completion	Less than 0.9 kPa (7 mmHg)
Following conditions are met for 14 seconds	A and B
A. Difference between "minimum fuel tank pressure before leak check" and "fuel tank pressure when 14seconds after leak check"	0.5 kPa or more (3.5 mmHg)
B. Fuel tank pressure at 14 seconds after leak check	Less than – 3.7 kPa (–28 mmHg)

P0446

Detection Criteria	Threshold
Case 1: CCV stuck closed	
Fuel tank pressure when the CCV is opened after an EVAP leak check	Not changing
Case 2: VSV for pressure switching valve malfunction	
Fuel tank pressure when the VSV for bypass valve is closed after an EVAP leak check	Not changing
Case 3: VSV for EVAP stuck closed	
Fuel tank pressure after the VSV for EVAP is opened and manifold vacuum is introduced to the fuel tank	Not changing

MONITOR RESULT (MODE 06 DATA)

Test ID	Comp ID	Description of Test Data	Description of Test Limit	Unit	Conversion Factor
$02	$81	Tank pressure change value during vacuum introduction	Malfunction criteria for VSV for EVAP	mmHg	Multiply by 0.0916
	$82	Fuel tank pressure change value at switching over the canister close valve or VSV for pressure switching valve.	Malfunction criteria for canister close valve and VSV for pressure switching valve	mmHg	Multiply by 0.0458 minus 2.930
	$03	Fuel tank pressure change 5 seconds after the end the vacuum introduction cycle Conditions: • VSV for EVAP: Closed • CCV: Closed • VSV for bypass valve: Open	Malfunction criteria for 0.040 leak	mmHg	Multiply by 0.0458
	$04		Malfunction criteria for 0.020 leak	mmHg	Multiply by 0.0458

Refer to page 05–27 for the detailed information on Checking Monitor Status.

WIRING DIAGRAM

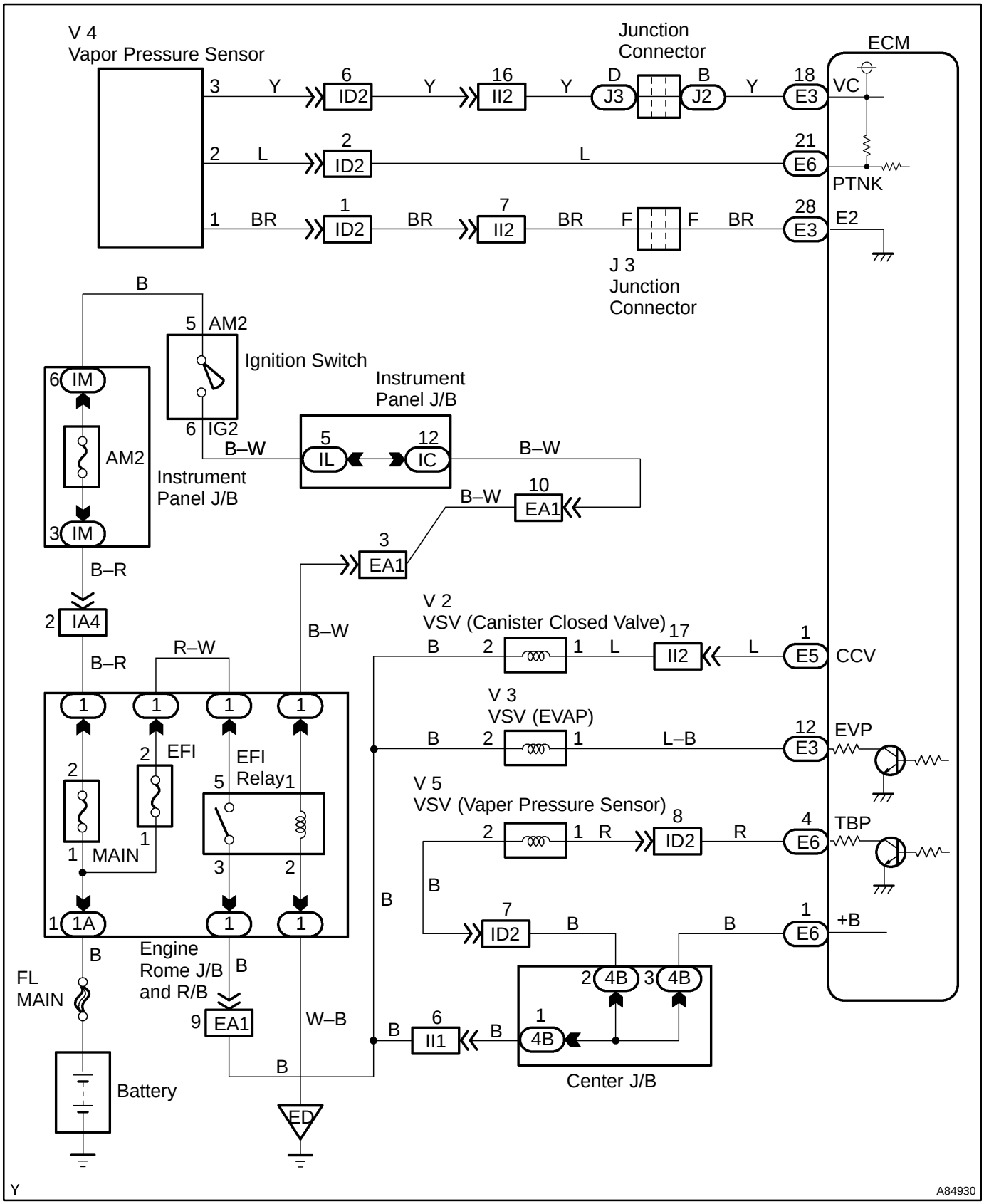

INSPECTION PROCEDURE

HINT:

- If DTC P0441 (Purge Flow), P0446 (VSV for CCV or VSV for Pressure switching valve), P0451, P0452 or P0453 (See page 05–242) is output with DTC P0442 or P0456 (See page 05–218), first troubleshoot DTC P0441, P0446, P0451, P0452 or P0453. If no malfunction is detected, troubleshoot DTC P0442 or P0456 next.
- Read freeze frame data using the hand–held tester or the OBD II scan tool. Freeze frame data records the engine conditions when a malfunction is detected. When troubleshooting, it is useful for determining whether the vehicle was running or stopped, the engine was warmed up or not, the air–fuel ratio was lean or rich, etc. at the time of the malfunction.
- When the ENGINE RUN TIME in the freeze frame data is less than 200 seconds, carefully check the vapor pressure sensor.

Hand–held Tester:

1	CHECK FUEL TANK CAP ASSY(CHECK THAT FUEL TANK CAP IS TOYOTA GENUINE PARTS)

NG → REPLACE TO TOYOTA GENUINE PARTS

OK

2	CHECK THAT FUEL TANK CAP IS CORRECTLY INSTALLED

NG → CORRECTLY INSTALL FUEL TANK CAP

OK

3	INSPECT FUEL TANK CAP ASSY (See page 12–1)

NG → REPLACE FUEL TANK CAP ASSY

OK

4	CHECK FILLER NECK FOR DAMAGE

(a) Remove the fuel tank cap.
(b) Visually check the fuel inlet pipe for damage.
(c) Reinstall the fuel tank cap.

NG → REPLACE FUEL TANK INLET PIPE SUB–ASSY

OK

5	PERFORM ACTIVE TEST BY HAND–HELD TESTER(CHECK FOR EVAP PURGE FLOW)

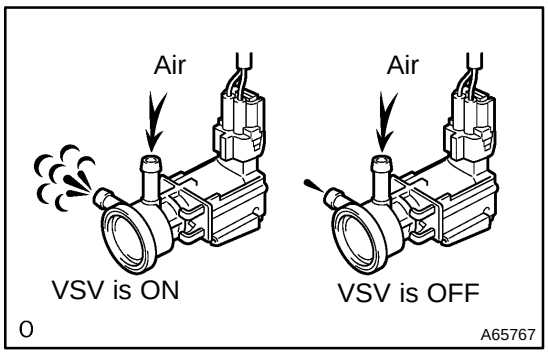

(a) Select the item ”DIAGNOSIS/ENHANCED OBD II/ACTIVE TEST” mode on the hand–held tester.
(b) Disconnect the vacuum hose of the VSV for EVAP from the charcoal canister.
(c) Start the engine.
(d) Select the item ”EVAP VSV (ALON)/ALL” in the ACTIVE TEST and operate EVAP VSV (Press the right or left button).
(e) When the VSV for the EVAP is operated by the hand–held tester, check whether the disconnected hose applies suction to your finger.
Result:
VSV is ON: Disconnected hose sucks.
VSV is OFF: Disconnected hose does not suck.
(f) Reconnect the vacuum hose.

OK	Go to step 9

NG

6	CHECK VACUUM HOSES(INTAKE MANIFOLD – VSV FOR EVAP, VSV FOR EVAP – CHARCOAL CANISTER)

(a) Check that the vacuum hose is connected correctly.
(b) Check the vacuum hose for looseness and disconnection.
(c) Check the vacuum hose for cracks, hole, damage and blockage.

NG	REPAIR OR REPLACE VACUUM HOSE

OK

7	INSPECT VSV FOR EVAP(OPERATION) (See page 12–1)

NG	REPLACE VSV FOR EVAP

OK

8	CHECK HARNESS AND CONNECTOR(EFI RELAY – VSV FOR EVAP, VSV FOR EVAP – ECM)

Wire Harness Side:

V3 VSV for EVAP Connector

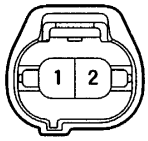

Front View

A51984 A52933

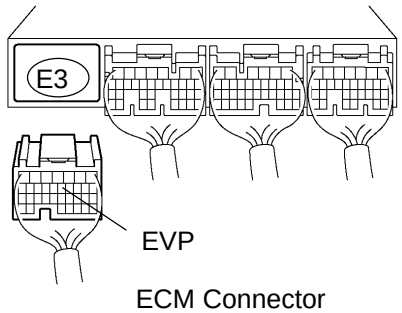

A65743

Engine Room R/B:

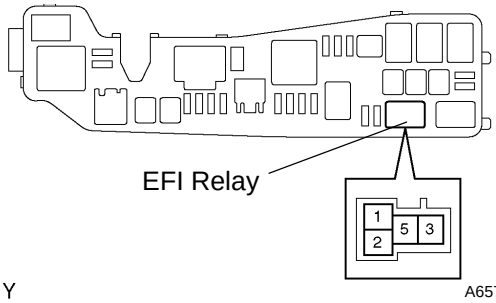

A65750

(a) Check the harness and the connector between the VSV for EVAP and the ECM.
  (1) Disconnect the V3 VSV for EVAP connector.
  (2) Disconnect the E3 ECM connector.
  (3) Check the resistance between the wire harness side connectors.

Standard (Check for open):

Tester Connection	Specified Condition
VSV for EVAP (V3–1) – EVP (E3–12)	Below 1 Ω

Standard (Check for short):

Tester Connection	Specified Condition
VSV for EVAP (V3–1) or EVP (E3–12) – Body ground	10 kΩ or higher

  (4) Reconnect the VSV for EVAP connector.
  (5) Reconnect the ECM connector.

(b) Check the harness and the connector between the VSV for EVAP and the EFI relay.
  (1) Disconnect the V3 VSV for EVAP connector.
  (2) Remove the EFI relay from the engine room R/B.
  (3) Check the resistance between the wire harness side connectors.

Standard (Check for open):

Tester Connection	Specified Condition
VSV for EVAP (V3–2) – EFI relay (3)	Below 1 Ω

Standard (Check for short):

Tester Connection	Specified Condition
VSV for EVAP (V3–2) or EFI relay (3) – Body ground	10 kΩ or higher

  (4) Reconnect the VSV for EVAP connector.
  (5) Reinstall the EFI relay.

NG → **REPAIR OR REPLACE HARNESS OR CONNECTOR**

OK

REPLACE ECM (See page 10–11)

9	PERFORM ACTIVE TEST BY HAND–HELD TESTER(VSV FOR CCV)

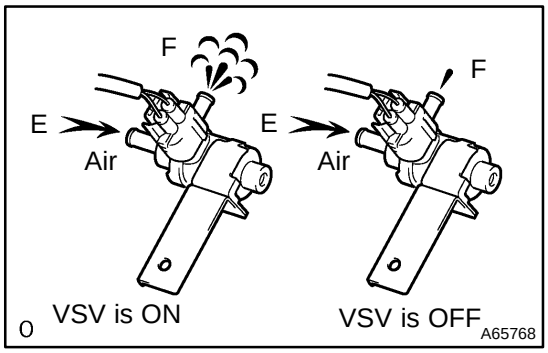

(a) Disconnect the vacuum hose of the VSV for CCV from the charcoal canister.
(b) Start the engine.
(c) Select the item ”DIAGNOSIS/ENHANCED OBD II/ACTIVE TEST” mode on the hand–held tester.
(d) Select the item ”CAN CTRL VSV/ALL” in the ACTIVE TEST and operate CAN CTRL VSV (Press the right or left button).
(e) Check the VSV operation when it is operated by the hand–held tester.
Result:
VSV is ON: Air from port E flows out through port F.
VSV is OFF: Air does not flow from port E to port F.

OK → **Go to step 13**

NG

10	CHECK VACUUM HOSES(VSV FOR CCV – CHARCOAL CANISTER)

(a) Check that the vacuum hose is connected correctly.
(b) Check the vacuum hose for looseness and disconnection.
(c) Check the vacuum hose for cracks, hole, damage and blockage.

NG → **REPAIR OR REPLACE VACUUM HOSES**

OK

11	INSPECT VSV FOR CCV(OPERATION) (See page 12–6)

NG → **REPLACE VSV FOR CCV**

OK

12	CHECK HARNESS AND CONNECTOR(EFI RELAY – VSV FOR CCV, VSV FOR CCV – ECM)

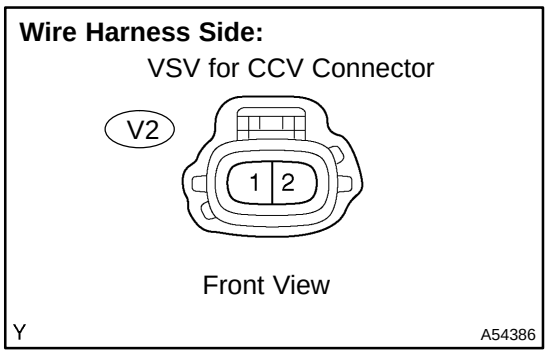

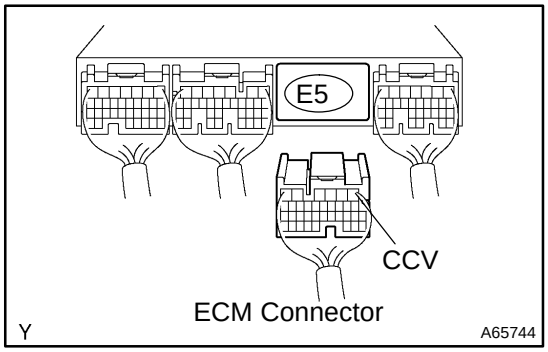

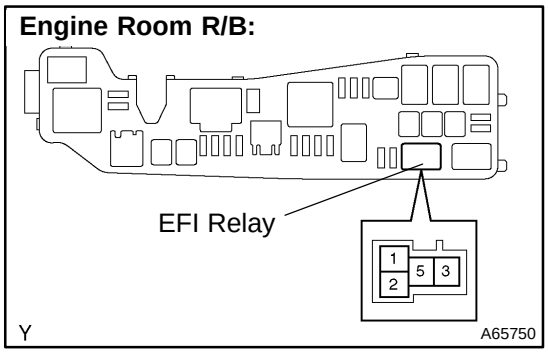

(a) Check the harness and connector between the VSV for CCV and ECM.
  (1) Disconnect the V2 VSV for CCV connector.
  (2) Disconnect the E5 ECM connector.
  (3) Check the resistance between the wire harness side connectors.

Standard (Check for open):

Tester Connection	Specified Condition
VSV for CCV (V2–1) – CCV (E5–1)	Below 1 Ω

Tester Connection	Specified Condition
VSV for CCV (V2–1) or CCV (E5–1) – Body ground	10 kΩ or higher

  (4) Reconnect the VSV for CCV connector.
  (5) Reconnect the ECM connector.

(b) Check the harness and the connector between the VSV for CCV and the EFI relay.
  (1) Disconnect the V2 VSV for CCV connector.
  (2) Remove the EFI relay from the engine room R/B.
  (3) Check the resistance between the wire harness side connectors.

Standard (Check for open):

Tester Connection	Specified Condition
VSV for CCV (V2–2) – EFI relay (3)	Below 1 Ω

Standard (Check for short):

Tester Connection	Specified Condition
VSV for CCV (V2–2) or EFI relay (3) – Body ground	10 kΩ or higher

  (4) Reconnect the VSV for CCV connector.
  (5) Reinstall the EFI relay.

NG → **REPAIR OR REPLACE HARNESS OR CONNECTOR**

OK

REPLACE ECM (See page 10–11)

13	PERFORM ACTIVE TEST BY HAND–HELD TESTER(VSV FOR PRESSURE SWITCHING VALVE)

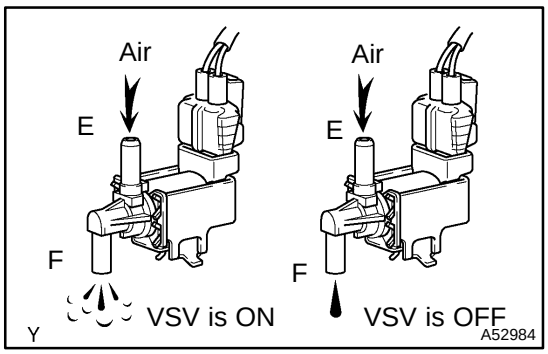

(a) Select the item ”DIAGNOSIS/ENHANCED OBD II/ACTIVE TEST” mode on the hand–held tester.

(b) Select the item ”TANK BYPASS VSV/ALL” in the ACTIVE TEST and operate TANK BYPASS VSV (Press the right or left button).

(c) Check the VSV operation when it is operated by the hand–held tester.

Result:

VSV is ON: Air from port E flows out through port F.

VSV is OFF: Air does not flow from port E to port F.

OK	Go to step 16

NG

14	INSPECT VSV FOR PRESSURE SWITCHING VALVE(OPERATION)

NG	REPLACE VSV FOR PRESSURE SWITCHING VALVE

OK

15	CHECK HARNESS AND CONNECTOR(EFI RELAY – VSV FOR PRESSURE SWITCHING VALVE, VSV FOR PRESSURE SWITCHING VALVE – ECM)

Wire Harness Side:

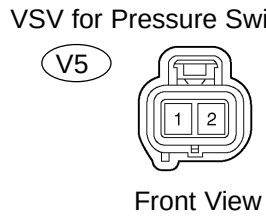

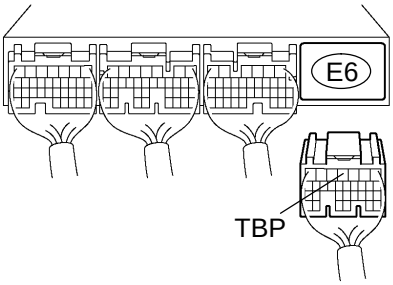

Engine Room R/B:

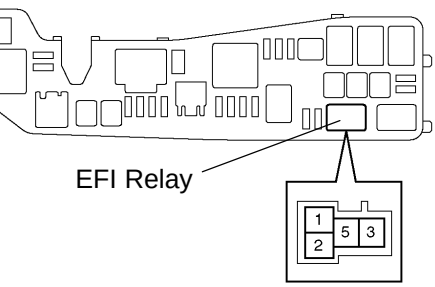

(a) Check the harness and the connector between the VSV for pressure switching valve and the ECM.

(1) Disconnect the V5 VSV for pressure switching valve connector.

(2) Disconnect the E6 ECM connector.

(3) Check the resistance between the wire harness side connectors.

Standard (Check for open):

Tester Connection	Specified Condition
VSV for pressure switching valve (V5–1) – TBP (E6–4)	Below 1 Ω

Standard (Check for short):

Tester Connection	Specified Condition
VSV for pressure switching valve (V5–1) or TBP (E6–4) – Body ground	10 kΩ or higher

(4) Reconnect the VSV for pressure switching valve connector.

(5) Reconnect the ECM connector.

(b) Check the harness and the connector between the VSV for pressure switching valve and the EFI relay.

(1) Disconnect the V5 VSV for pressure switching valve connector.

(2) Remove the EFI relay from the engine room R/B.

(3) Check the resistance between the wire harness side connectors.

Standard (Check for open):

Tester Connection	Specified Condition
VSV for pressure switching valve (V5–2) – EFI relay (3)	Below 1 Ω

Standard (Check for short):

Tester Connection	Specified Condition
VSV for pressure switching valve (V5–2) or EFI relay (3) – Body ground	10 kΩ or higher

(4) Reconnect the VSV for pressure switching valve connector.

(5) Reinstall the EFI relay.

NG → **REPAIR OR REPLACE HARNESS OR CONNECTOR**

OK

REPLACE ECM (See page 10–11)

16 CHECK FOR EVAPORATIVE EMISSIONS LEAK(NEAR FUEL TANK)

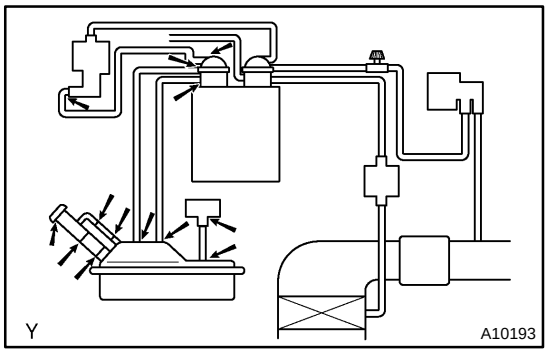

(a) Check whether hoses close to the fuel tank have been modified, and check if there are signs of any accident near the fuel tank.
  (1) Check the following parts for cracks, deformation or loose connection:
    - Fuel tank
    - Fuel tank filler pipe
    - Hoses and tubes around fuel tank

NG → **REPAIR OR REPLACE EVAPORATIVE EMISSIONS LEAK PART**

OK

17 CHECK VACUUM HOSES(VAPOR PRESSURE SENSOR – FUEL TANK, CHARCOAL CANISTER – VSV FOR PRESSURE SWITCHING VALVE)

(a) Check that the vacuum hose is connected correctly.
(b) Check the vacuum hose for looseness and disconnection.
(c) Check the vacuum hose for cracks, hole and damage.

NG → **REPAIR OR REPLACE VACUUM HOSE**

OK

18 CHECK HOSE AND TUBE(FUEL TANK – CHARCOAL CANISTER)

(a) Check the connection between the fuel tank and fuel EVAP pipe, the fuel EVAP pipe and under–floor fuel tube, the under–floor fuel tube and charcoal canister.
(b) Check the hose and the tube for cracks, hole and damage.

NG → **REPAIR OR REPLACE HOSE AND TUBE**

OK

19 INSPECT ECM(VC VOLTAGE)

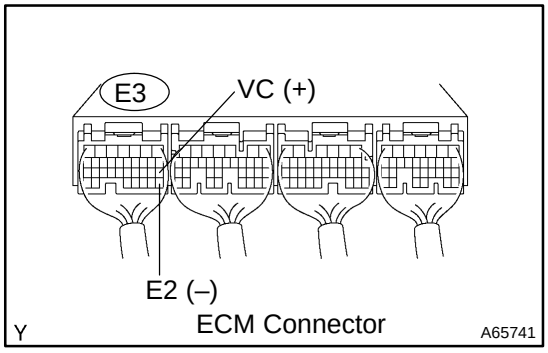

(a) Turn the ignition switch ON.
(b) Measure the voltage between the terminals of the E3 ECM connector.

Standard:

Tester Connection	Specified Condition
VC (E3–18) – E2 (E3–28)	4.5 to 5.5 V

NG → **REPLACE ECM (See page 10–11)**

OK

20 INSPECT ECM(PTNK VOLTAGE)

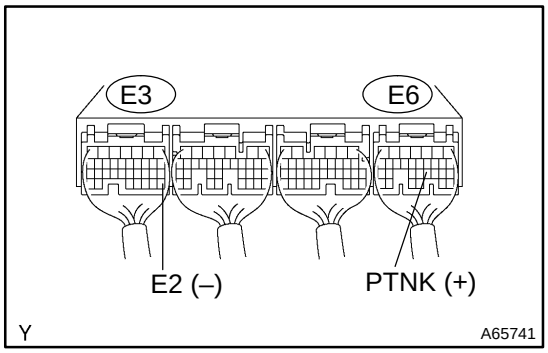

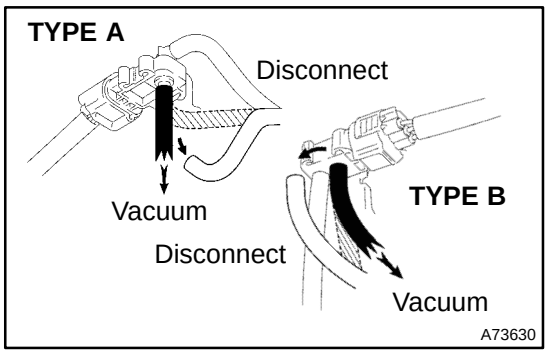

(a) Turn the ignition switch ON.
(b) Measure the voltage between terminals of the E3 and E6 ECM connectors.
(1) Disconnect the vacuum hose from the vapor pressure sensor.

Standard (1):

Tester Connection	Specified Condition
PTNK (E6–21) – E2 (E3–28)	2.9 to 3.7 V

NOTICE:

The vacuum applied to the vapor pressure sensor must be less than 66.7 kPa (500 mmHg, 19.7 in.Hg).

(2) Using the MITYVAC (Hand–held Vacuum Pump), apply a vacuum of 4.0 kPa (30 mmHg, 1.18 in.Hg) to the vapor pressure sensor.

Standard (2):

Tester Connection	Specified Condition
PTNK (E6–21) – E2 (E3–28)	0.5 V or less

(3) Reconnect the vacuum hose.

OK → **Go to step 22**

NG

21 CHECK HARNESS AND CONNECTOR(VAPOR PRESSURE SENSOR – ECM)

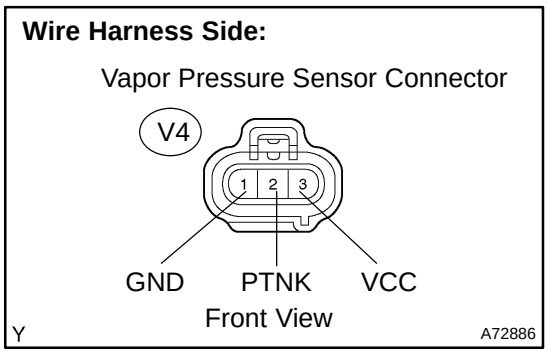

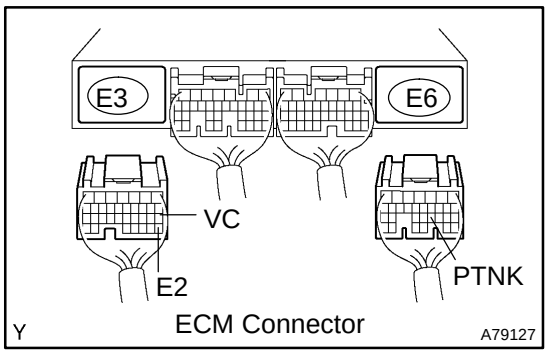

(a) Disconnect the V4 vapor pressure sensor connector.
(b) Disconnect the E3 and E6 ECM connectors.
(c) Check the resistance between the wire harness side connectors.

Standard (Check for open):

Tester Connection	Specified Condition
PTNK (V4–2) – PTNK (E6–21)	Below 1 Ω
GND (V4–1) – E2 (E3–28)	
VCC (V4–3) – VC (E3–18)	

Standard (Check for short):

Tester Connection	Specified Condition
PTNK (V4–2) or PTNK (E6–21) – Body ground	10 kΩ or higher
VCC (V4–3) or VC (E3–18) – Body ground	

(d) Reconnect the vapor pressure sensor connector.
(e) Reconnect the ECM connectors.

NG → **REPAIR OR REPLACE HARNESS OR CONNECTOR**

OK

REPLACE ECM (See page 10–11)

22	INSPECT FUEL TANK INLET VALVE ASSY

NG → REPLACE FUEL TANK INLET VALVE ASSY

OK

23	INSPECT FUEL TANK ASSY

NG → REPLACE FUEL TANK ASSY

OK

24	INSPECT CHARCOAL CANISTER ASSY(CRACKS, HOLE AND DAMAGE)

NG → REPAIR OR REPLACE CHARCOAL CANISTER ASSY

OK

REPLACE ECM (See page 10–11)

OBDII scan tool (excluding Hand–held Tester):

1	CHECK FUEL TANK CAP ASSY(CHECK THAT FUEL TANK CAP IS TOYOTA GEHUINE PARTS)

NG → REPLACE TO GENUINE PARTS

OK

2	CHECK THAT FUEL TANK CAP IS CORRECTLY INSTALLED

NG → CORRECTLY INSTALL FUEL TANK CAP

OK

3	INSPECT FUEL TANK CAP ASSY (See page 12–1)

NG → REPLACE FUEL TANK CAP ASSY

OK

4	CHECK FILLER NECK FOR DAMAGE

(a) Remove the fuel tank cap.
(b) Visually check the fuel inlet pipe for damage.

NG → REPLACE FUEL TANK INLET PIPE SUB–ASSY

OK

5	CHECK FOR EVAPORATIVE EMISSIONS LEAK(NEAR FUEL TANK OR CHACOAL CANISTER)

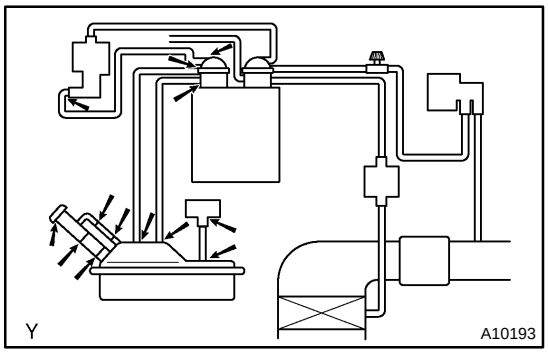

(a) Check whether hoses close to the fuel tank have been modified, and check if there are signs of any accident near the fuel tank or the charcoal canister.
  (1) Check the following parts for cracks, deformation or loose connection:
    - Fuel tank
    - Charcoal canister
    - Fuel tank filler pipe
    - Hoses and tubes around fuel tank and charcoal canister

NG → REPAIR OR REPLACE EVAPORATIVE EMISSIONS LEAK PART

OK

6	CHECK VACUUM HOSES(VAPOR PRESSURE SENSOR – FUEL TANK, CHARCOAL CANISTER – VSV FOR PRESSURE SWITCHING VALVE)

(a) Check that the vacuum hose is connected correctly.
(b) Check the vacuum hose for looseness and disconnection.
(c) Check the vacuum hose for cracks, hole and damage.

NG → REPAIR OR REPLACE VACUUM HOSE

OK

7	CHECK HOSE AND TUBE(FUEL TANK – CHARCOAL CANISTER)

(a) Check the connection between the fuel tank and fuel EVAP pipe, the fuel EVAP pipe and under floor fuel tube , the under floor fuel tube and charcoal canister.
(b) Check the hose and the tube for cracks, hole and damage.

NG → REPAIR OR REPLACE HOSE AND TUBE

OK

8	CHECK VACUUM HOSES((5), (6), (7), (8) AND (9) IN FIG. 1 IN CIRCUIT DESCRIPTION)

(a) Check that the vacuum hose is connected correctly.
(b) Check the vacuum hose for looseness and disconnection.
(c) Check the vacuum hose for cracks, hole and damage.

NG → REPAIR OR REPLACE VACUUM HOSES

OK

9	CHECK EACH VSV CONNECTOR FOR LOOSENESS AND DISCONNECTION(VSV FOR EVAP, VSV FOR CCV, VSV FOR PRESSURE SWITCHING VALVE)

NG → REPAIR OR CONNECT VSV AND SENSOR CONNECTOR

OK

10	INSPECT CHARCOAL CANISTER ASSY(CRACKS, HOLE AND DAMAGE)

NG → CHECK AND REPLACE CHARCOAL CANISTER ASSY

OK

11	INSPECT ECM(VC VOLTAGE)

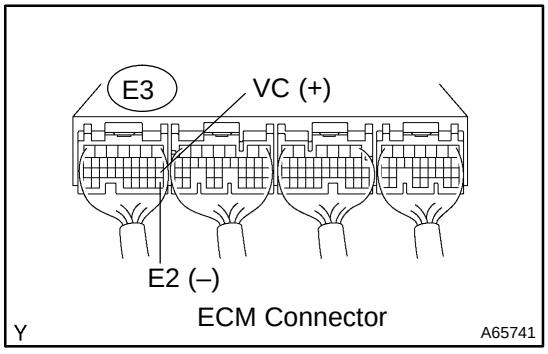

(a) Turn the ignition switch ON.
(b) Measure voltage between the terminals of the E3 ECM connector.
Standard:

Tester Connection	Specified Condition
VC (E3–18) – E2 (E3–28)	4.5 to 5.5 V

NG → REPLACE ECM (See page 10–11)

OK

12	INSPECT ECM(PTNK VOLTAGE)

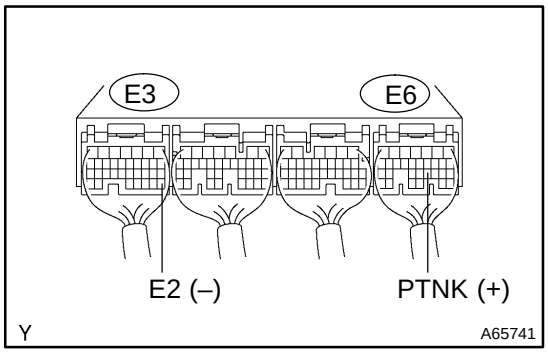

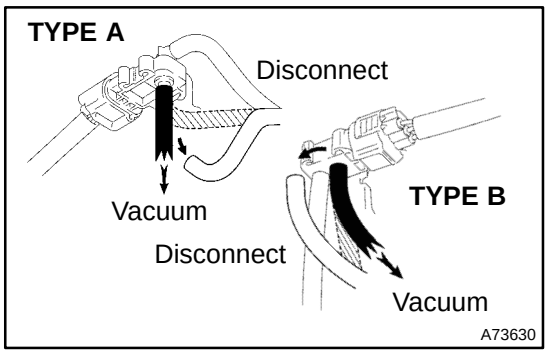

(a) Turn the ignition switch ON.

(b) Measure the voltage between terminals of the E3 and E6 ECM connectors.

(1) Disconnect the vacuum hose from the vapor pressure sensor.

Standard (1):

Tester Connection	Specified Condition
PTNK (E6–21) – E2 (E3–28)	2.9 to 3.7 V

NOTICE:

The vacuum applied to the vapor pressure sensor must be less than 66.7 kPa (500 mmHg, 19.7 in.Hg).

(2) Using the MITYVAC (Hand–held Vacuum Pump), apply a vacuum of 4.0 kPa (30 mmHg, 1.18 in.Hg) to the vapor pressure sensor.

Standard (2):

Tester Connection	Specified Condition
PTNK (E6–21) – E2 (E3–28)	0.5 V or less

(3) Reconnect the vacuum hose from the vapor pressure sensor.

OK	Go to step 14

NG

13 CHECK HARNESS AND CONNECTOR(VAPOR PRESSURE SENSOR – ECM)

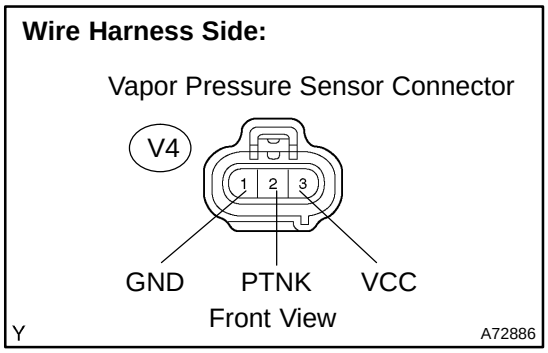

(a) Disconnect the V4 vapor pressure sensor connector.
(b) Disconnect the E3 and E6 ECM connectors.
(c) Check the resistance between the wire harness side connectors.

Standard (Check for open):

Tester Connection	Specified Condition
PTNK (V4–2) – PTNK (E6–21)	Below 1 Ω
GND (V4–1) – E2 (E3–28)	
VCC (V4–3) – VC (E3–18)	

Standard (Check for short):

Tester Connection	Specified Condition
PTNK (V4–2) or PTNK (E6–21) – Body ground	10 kΩ or higher
VCC (V4–3) or VC (E3–18) – Body ground	

(d) Reconnect the vapor pressure sensor connector.
(e) Reconnect the ECM connectors.

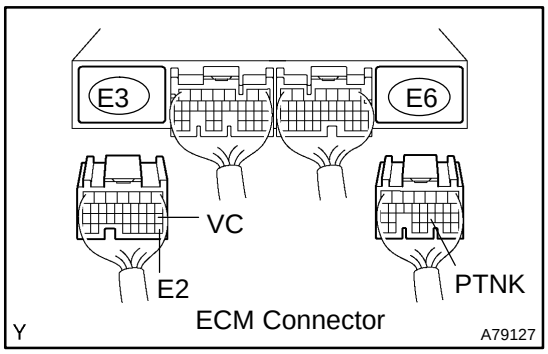

NG → **REPAIR OR REPLACE HARNESS OR CONNECTOR**

OK

REPLACE ECM (See page 10–11)

14 INSPECT VSV FOR EVAP(FUNCTION)

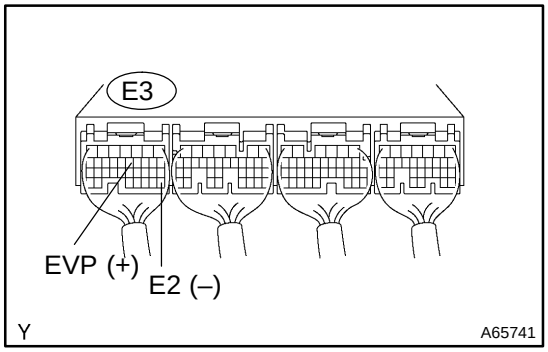

(a) Turn the ignition switch ON.
(b) Check the VSV function.
(1) Connect between terminals EVP and E2 of the ECM connector (VSV ON).

VSV is ON:
Air from port E flows out through port F

(2) Disconnect between terminals EVP and E2 of the ECM connector (VSV OFF).

VSV is OFF:
Air does not flow port E to port F

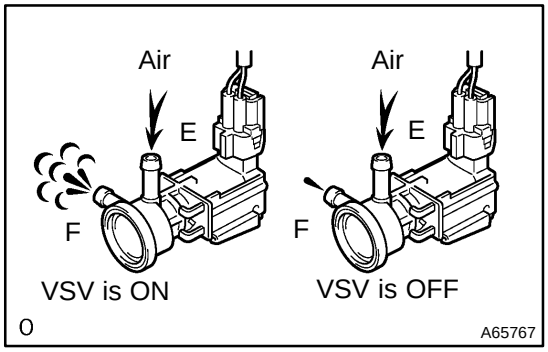

OK → **Go to step 17**

NG

15	INSPECT VSV FOR EVAP(OPERATION) (See page 12–6)

NG → REPLACE VSV FOR EVAP

OK

16	CHECK HARNESS AND CONNECTOR(EFI RELAY – VSV FOR EVAP, VSV FOR EVAP – ECM)

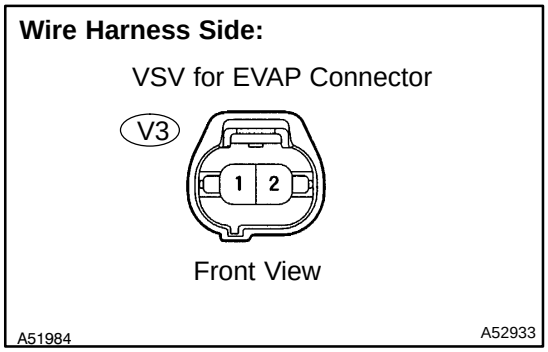

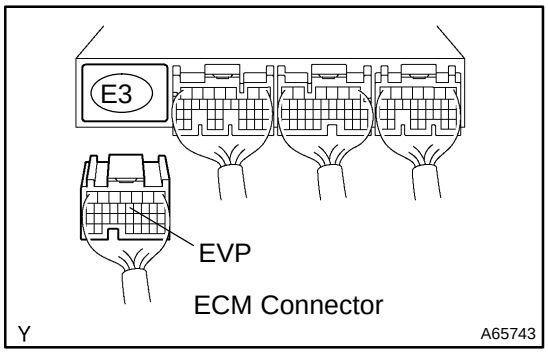

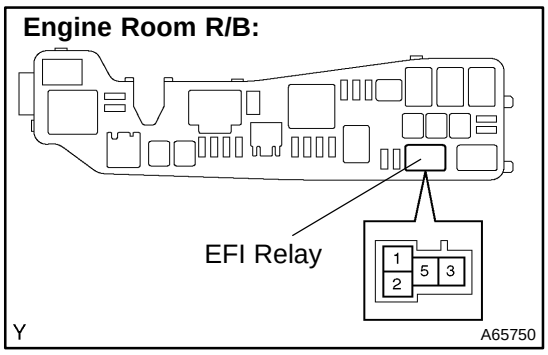

(a) Check the harness and between the VSV for EVAP and the ECM connector.
  (1) Disconnect the V3 VSV for EVAP connector.
  (2) Disconnect the E3 ECM connector.
  (3) Check the resistance between the wire harness side connectors.

Standard (Check for open):

Tester Connection	Specified Condition
VSV for EVAP (V3–1) – EVP (E3–12)	Below 1 Ω

Standard (Check for short):

Tester Connection	Specified Condition
VSV for EVAP (V3–1) or EVP (E3–12) – Body ground	10 kΩ or higher

  (4) Reconnect the VSV for EVAP connector.
  (5) Reconnect the ECM connector.

(b) Check the harness and connector between the VSV for EVAP and the EFI relay.
  (1) Disconnect the V3 VSV for EVAP connector.
  (2) Remove the EFI relay from the engine room R/B.
  (3) Check the resistance between the wire harness side connectors.

Standard (Check for open):

Tester Connection	Specified Condition
VSV for EVAP (V3–2) – EFI relay (3)	Below 1 Ω

Standard (Check for short):

Tester Connection	Specified Condition
VSV for EVAP (V3–2) or EFI relay (3) – Body ground	10 kΩ or higher

  (4) Reconnect the VSV for EVAP connector.
  (5) Reinstall the EFI relay.

NG → REPAIR OR REPLACE HARNESS OR CONNECTOR

OK

REPLACE ECM (See page 10–11)

17	INSPECT VSV FOR CCV(FUNCTION)

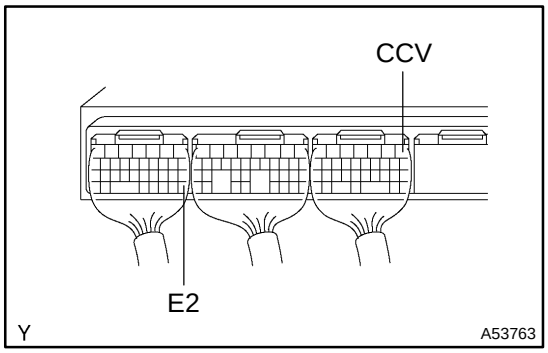

(a) Turn the ignition switch ON.
(b) Check the VSV function.
(1) Connect between terminals CCV and E2 of the ECM connector (VSV ON).
VSV is ON:
Air from port E flows out through port F
(2) Disconnect between terminals CCV and E2 of the ECM connector (VSV OFF).
VSV is OFF:
Air does not flow from port E to port F

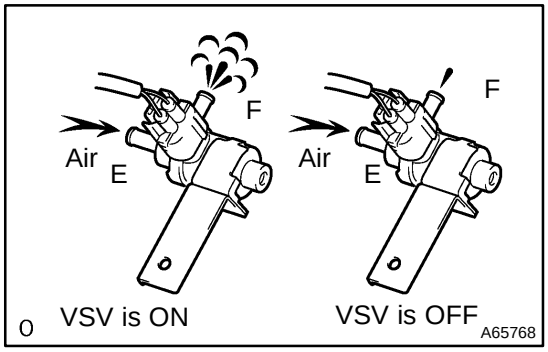

OK → **Go to step 20**

NG

18	INSPECT VSV FOR CCV(OPERATION) (See page 12–6)

NG → **REPLACE VSV FOR CCV**

OK

19	CHECK HARNESS AND CONNECTOR(EFI RELAY – VSV FOR CCV, VSV FOR CCV – ECM)

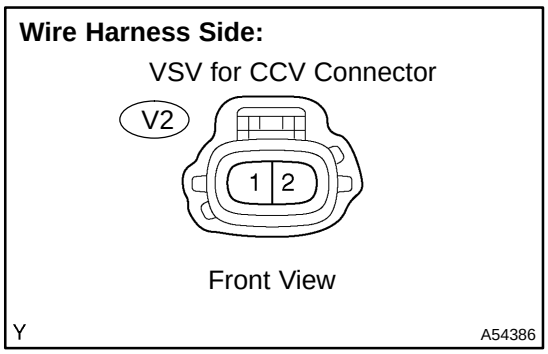

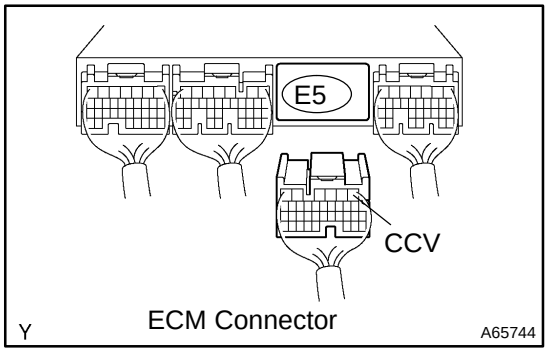

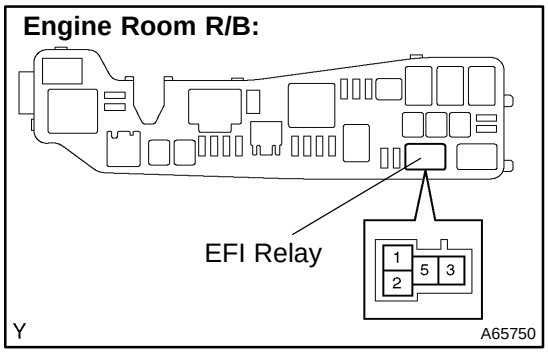

(a) Check the harness and the connector between the VSV for CCV and the ECM.

(1) Disconnect the V2 VSV for CCV connector.

(2) Disconnect the E5 ECM connector.

(3) Check the resistance between the wire harness side connectors.

Standard (Check for open):

Tester Connection	Specified Condition
VSV for CCV (V2–1) – CCV (E5–1)	Below 1 Ω

Standard (Check for short):

Tester Connection	Specified Condition
VSV for CCV (V2–1) or CCV (E5–1) – Body ground	10 kΩ or higher

(4) Reconnect the VSV for CCV connector.

(5) Reconnect the ECM connector.

(b) Check the harness and the connector between the VSV for CCV and the EFI relay.

(1) Disconnect the V2 VSV for CCV connector.

(2) Remove the EFI relay from the engine room R/B.

(3) Check the resistance between the wire harness side connectors.

Standard (Check for open):

Tester Connection	Specified Condition
VSV for CCV (V2–2) – EFI relay (3)	Below 1 Ω

Standard (Check for short):

Tester Connection	Specified Condition
VSV for CCV (V2–2) or EFI relay (3) – Body ground	10 kΩ or higher

(4) Reconnect the VSV for CCV connector.

(5) Reinstall the EFI relay.

NG → **REPAIR OR REPLACE HARNESS OR CONNECTOR**

OK

REPLACE ECM (See page 10–11)

20	INSPECT VSV FOR PRESSURE SWITCHING VALVE(FUNCTION)

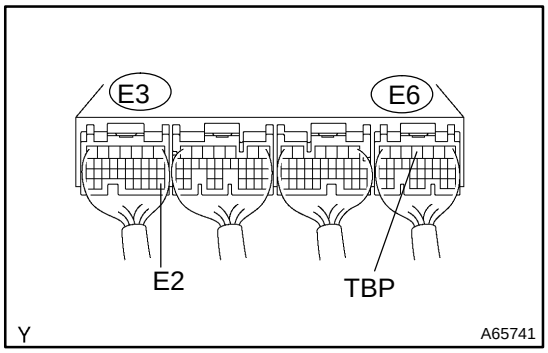

(a) Turn the ignition switch ON.
(b) Check the VSV function.
(1) Connect between terminals TBP and E2 of the ECM connector (VSV ON).
VSV is ON: Air from port E flows out through port F
(2) Disconnect between terminals TBP and E2 of the ECM connector (VSV OFF).
VSV is OFF: Air does not from flow port E to port F

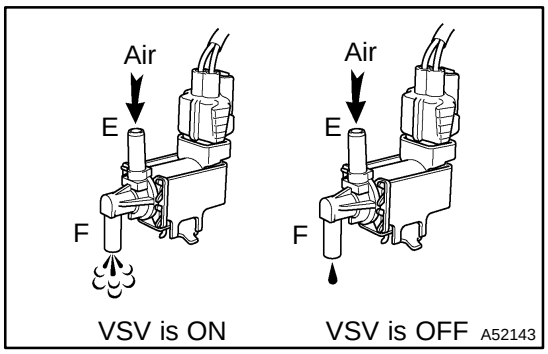

OK → **Go to step 23**

NG

21	INSPECT VSV FOR PRESSURE SWITCHING VALVE(OPERATION) (See page 12–6)

NG → **REPLACE VSV FOR PRESSURE SWITCHING VALVE**

OK

22	CHECK HARNESS AND CONNECTOR(EFI RELAY – VSV FOR PRESSURE SWITCHING VALVE, VSV FOR PRESSURE SWITCHING VALVE – ECM)

Wire Harness Side:

VSV for Pressure Switching Valve

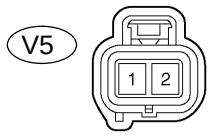

Front View

Y A72890

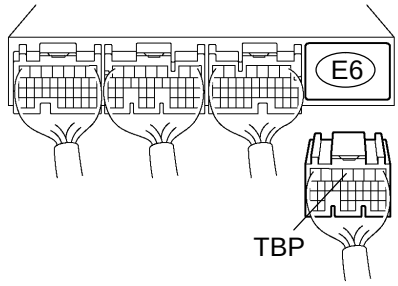

ECM Connector

Y A65748

Engine Room R/B:

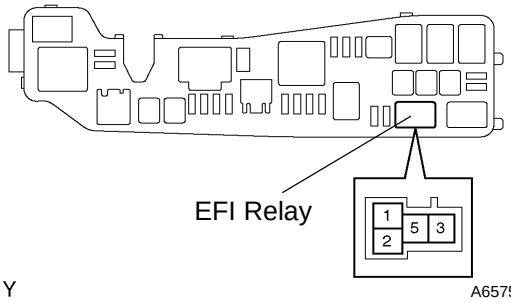

Y A65750

(a) Check the harness and the connector between the VSV for pressure switching valve and the ECM.

(1) Disconnect the V5 VSV for pressure switching valve connector.

(2) Disconnect the E6 ECM connector.

(3) Check the resistance between the wire harness side connectors.

Standard (Check for open):

Tester Connection	Specified Condition
VSV for pressure switching valve (V5–1) – TBP (E6–4)	Below 1 Ω

Standard (Check for short):

Tester Connection	Specified Condition
VSV for pressure switching valve (V5–1) or TBP (E6–4) – Body ground	10 kΩ or higher

(4) Reconnect the VSV for pressure switching valve connector.

(5) Reconnect the ECM connector.

(b) Check the harness and the connector between the VSV for pressure switching valve and EFI relay.

(1) Disconnect the V5 VSV for pressure switching valve connector.

(2) Remove the EFI relay from the engine room R/B.

(3) Check the resistance between the wire harness side connectors.

Standard (Check for open):

Tester Connection	Specified Condition
VSV for pressure switching valve (V5–2) – EFI relay (3)	Below 1 Ω

Standard (Check for short):

Tester Connection	Specified Condition
VSV for pressure switching valve (V5–2) or EFI relay (3) – Body ground	10 kΩ or higher

(4) Reconnect the VSV for pressure switching valve connector.

(5) Reinstall the EFI relay from.

NG → **REPAIR OR REPLACE HARNESS OR CONNECTOR**

OK

REPLACE ECM (See page 10–11)

23	INSPECT FUEL TANK INLET VALVE ASSY

NG → REPLACE FUEL TANK INLET VALVE ASSY

OK

24	INSPECT FUEL TANK ASSY

NG → REPLACE FUEL TANK ASSY

OK

IT IS LIKELY THAT VEHICLE USER DID NOT PROPERLY CLOSE FUEL TANK CAP

DTC	P0442	EVAPORATIVE EMISSION CONTROL SYSTEM LEAK DETECTED (SMALL LEAK)

DTC	P0456	EVAPORATIVE EMISSION CONTROL SYSTEM LEAK DETECTED (VERY SMALL LEAK)

CIRCUIT DESCRIPTION

The vapor pressure sensor and the VSV for the canister closed valve (CCV) are used to detect abnormalities in the evaporative emission control system. The ECM decides whether there is an abnormality in the evaporative emission control system based on the vapor pressure sensor signal.
DTC P0442 or P0456 is recorded by the ECM when evaporative emissions leak from the components within the dotted line in Fig. 1 below, or when the vapor pressure sensor malfunctions.

Fig. 1

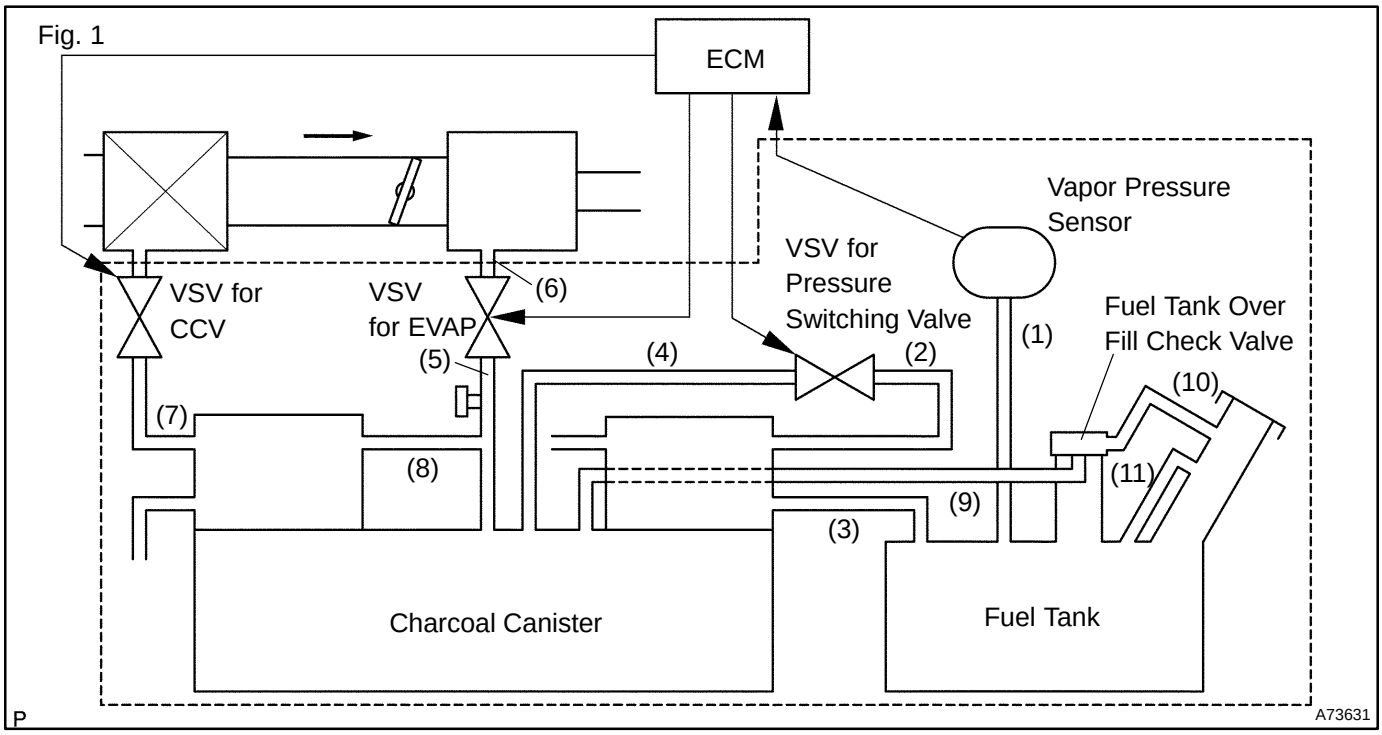

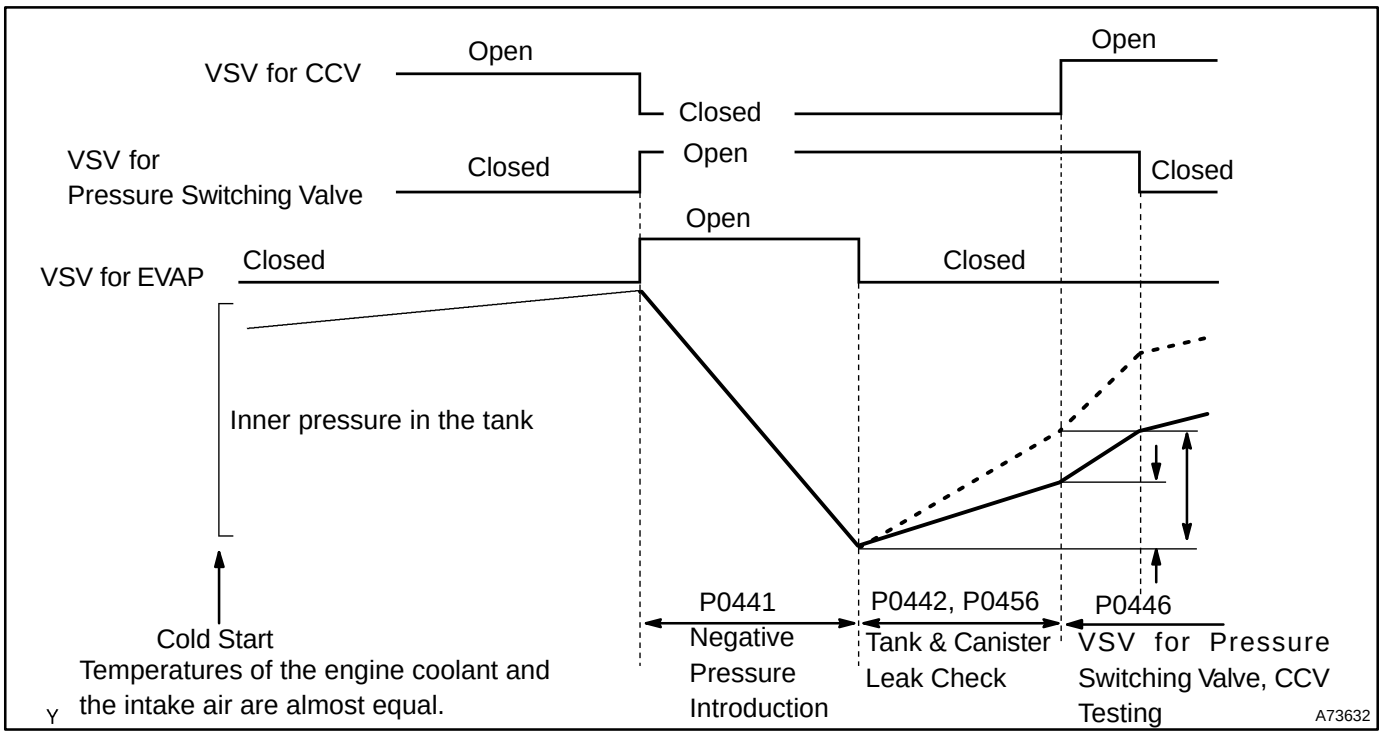

DTC No.	DTC Detection Condition	Trouble Area
P0442	After negative pressure introduction is completed, if the pressure in the EVAP system sharply increases. (small leak) (2 trip detection logic)	• Vacuum hose has cracks, holes, or is blocked, damaged or disconnected • Fuel tank cap incorrectly installed • Fuel tank cap has cracks or is damaged • Open or short in vapor pressure sensor circuit • Vapor pressure sensor • Open or short in VSV circuit for EVAP • VSV for EVAP • Open or short in VSV circuit for CCV • VSV for CCV • Fuel tank has cracks, holes, or is damaged • Charcoal canister has cracks, holes, or is damaged • Fuel tank over fill check valve cracks, or is damaged • ECM
P0456	If the pressure in the EVAP system slightly increases while the ECM performs a leak check. (very small leak) (2 trip detection logic)	

HINT:

Typical DTC output of each trouble part.

Trouble part		Typical DTC output (*1)
Small Leak		P0442 and/or P0456 (*2)
Medium Leak (ex: Vacuum hose loose)		P0442
Large Leak (ex: Fuel tank cap loose)		P0441 and P0442 and P0446
VSV for EVAP	Open Malfunction	P0441
	Close Malfunction	P0441 and P0442 and P0446
VSV for CCV	Open Malfunction	P0441 and P0442 and P0446
	Close Malfunction	P0446
VSV for Pressure Switching	Open Malfunction	P0446
	Close Malfunction	P0441 and P0442 and P0446

*1: ECM may output some other DTCs combination.

*2: Refer to DTC P0441 and P0446 on page 05–193

MONITOR DESCRIPTION

The evaporative emission system consists of the vapor pressure sensor, the canister close valve (CCV), the VSV for pressure switching valve and the VSV for EVAP (Purge VSV), those are used to detect malfunction in the system by ECM.

This test will run once per driving cycle when the ECM detects stable vapor pressure in the fuel tank. While the vehicle is being driven on rough or winding roads, the movement of the fuel in the tank will cause unstable fuel tank vapor pressures and the diagnostic test will not executed.

The ECM performs the following steps:

(a) The CCV is closed. (shutting the system)

(b) The fuel tank pressure stability is checked. The diagnostic is disabled if the pressure change is more than specified value.

(c) The VSV for EVAP is opened. This introduces a negative pressure from the intake manifold to the fuel tank.

(d) The VSV for EVAP is closed and the negative pressure is sealed in the fuel tank.

(e) The ECM monitors the increase in fuel tank pressure for:

(1) Rapid increase in the internal pressure i.e. a large leak: 0.040 or more

(2) Pressure rise just above normal

If the ECM detects either of above conditions, it will interpret this as a leak in the EVAP system. The ECM will illuminate the MIL (2–trip detection logic) and set a DTC.

MONITOR STRATEGY

DTCs	P0442	Small leak (0.040 inch or more hole) detected
	P0456	Very small leak (0.020 inch hole) detected
Required sensors/components	Main	Vapor pressure sensor
	Sub	Mass air flow sensor, engine coolant temperature sensor, VSV for EVAP (purge VSV), VSV for CCV
Frequency of operation	Once per drive cycles	
Duration	60 seconds	
MIL operation	2 drive cycles	
Sequence of operation	None	

TYPICAL ENABLING CONDITIONS

Item	Criteria	
	Minimum	Maximum
The monitor will run whenever the following DTCs are not present	See ”List of Disable a monitor” (On page 05–25)	
Common pre–conditions for 0.020 and 0.040 inch:		
Altitude	–	2,400 m (7,872 ft.)
Throttle position learning	Completed	
Vapor pressure sensor	No malfunction	
Difference between intake air temperature and engine coolant temperature at engine start.	–7°C (–19.4°F)	11.1°C (52°F)
Vehicle speed condition	A or B	
A. Time after vehicle stopped (less than 6 mph (10 km/h))	90 seconds	–
B. Time after vehicle started (4 mph (7 km/h) or more)	20 seconds	
0.020 inch malfunction detection:		
Engine coolant temperature at engine start	10°C (50°F)	32°C (89.6°F)
Intake air temperature at engine start	10°C (50°F)	32°C (89.6°F)

Intake air temperature	10°C (50°F)	–
Fuel level condition in fuel tank during leak check	Fuel slosh is small (must not drive on road with bad conditions)	
Time after engine start	–	50 minutes
Fuel tank pressure condition before leak check (Fuel tank condition before closed negative pressure introduction)	Fuel tank internal pressure change is small before negative pressure introduction. (Reference: If fuel in the tank is high temperature, vapor volume increase and the internal pressure changes also increase)	
Vehicle speed and intake air amount condition before and after negative pressure introduction	Steady speed and not change greatly of intake air amount	
Fuel level	–	90%
0.020 inch leak detection	Not completed	
0.040 inch leak detection	Not detected	
VSV for CCV malfunction, bypass VSV malfunction	Not detected	
Vehicle speed	–	81 mph (130 km/h)
VSV for EVAP (Evap purge VSV) malfunction	Not detected	
0.040 inch malfunction:		
Engine coolant temperature at engine start	10°C (50°F)	35°C (95°F)
Intake air temperature at engine start	10°C (50°F)	35°C (95°F)
Intake air temperature	10°C (50°F)	–
Fuel level condition in fuel tank during leak check	Fuel slosh is small (must not drive on road with bad conditions)	
Time after engine start	–	50min
Fuel tank pressure condition before leak check (Fuel tank condition before closed negative pressure introduction)	Fuel tank internal pressure change is small before negative pressure introduction. (Reference: If fuel in the tank is high temperature, vapor volume increase and the internal pressure changes also increase)	
Vehicle speed and intake air amount condition before and after negative pressure introduction	Steady speed and not change greatly of intake air amount	
Fuel level	–	90%
0.040 inch leak detection	Not completed	
Fuel tank pressure at vacuum introduction completed	–2.4 kPa (–18 mmHg)	–
P0446 VSV check	No executed	

TYPICAL MALFUNCTION THRESHOLDS

Detection Criteria	Threshold
0.020 inch malfunction detection:	
Fuel tank pressure changing value, from –2.0 kPa (–15 mmHg), for 5 seconds	Increase more than 0.067 kPa (0.5 mmHg)
Fuel tank pressure changing value, from –2.7 kPa (–20 mmHg), for 5 seconds	Increase more than 0.067 kPa (0.5 mmHg)
0.040 inch malfunction detection:	
Fuel tank pressure changing value, from –2.0 kPa (–15 mmHg), for 5 seconds	Increase more than 0.24 kPa (1.8 mmHg)
Fuel tank pressure changing value, from –2.7 kPa (–20 mmHg), for 5 seconds	Increase more than 0.24 kPa (1.8 mmHg)

MONITOR RESULT (MODE 06 DATA)

Test ID	Comp ID	Description of Test Data	Description of Test Limit	Unit	Conversion Factor
$02	$81	Tank pressure change value during vacuum introduction	Malfunction criteria for VSV for EVAP	mmHg	Multiply by 0.0916
	$82	Fuel tank pressure change value at switching over the canister close valve or VSV for pressure switching valve.	Malfunction criteria for canister close valve and VSV for pressure switching valve	mmHg	Multiply by 0.0458 minus 2.930
	$03	Fuel tank pressure change 5 seconds after the end the vacuum introduction cycle Conditions: • VSV for EVAP: Closed • CCV: Closed • VSV for bypass valve: Open	Malfunction criteria for 0.040 leak	mmHg	Multiply by 0.0458
	$04		Malfunction criteria for 0.020 leak	mmHg	Multiply by 0.0458

Refer to page 05–27 for detailed information on Checking Monitor Status.

INSPECTION PROCEDURE

Hand–held Tester:

1 CHECK FUEL TANK CAP ASSY(CHECK THAT FUEL TANK CAP IS TOYOTA GENUINE PARTS)

NG → **REPLACE TO TOYOTA GENUINE PARTS**

OK

2 CHECK THAT FUEL TANK CAP IS CORRECTLY INSTALLED

NG → **CORRECTLY INSTALL FUEL TANK CAP**

OK

3 INSPECT FUEL TANK CAP ASSY (See page 12–1)

NG → **REPLACE FUEL TANK CAP ASSY**

OK

4 CHECK FILLER NECK FOR DAMAGE

(a) Remove the fuel tank cap.
(b) Visually check the fuel inlet pipe for damage.
(c) Reinstall the fuel tank cap.

NG → **REPLACE FUEL TANK INLET PIPE SUB–ASSY**

OK

5	PERFORM ACTIVE TEST BY HAND–HELD TESTER(CHECK FOR EVAP PURGE FLOW)

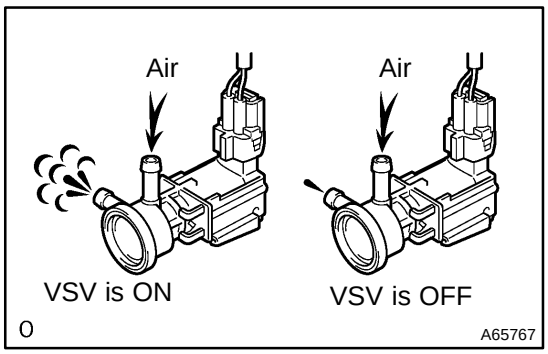

(a) Select the item ”DIAGNOSIS/ENHANCED OBD II/ACTIVE TEST” mode on the hand–held tester.
(b) Disconnect the vacuum hose of the VSV for EVAP from the charcoal canister.
(c) Start the engine.
(d) Select the item ”EVAP VSV (ALON)/ALL” in the ACTIVE TEST and operate EVAP VSV (Press the right or left button).
(e) When the VSV for the EVAP is operated by the hand–held tester, check whether the disconnected hose applies suction to your finger.
Result:
VSV is ON: Disconnected hose sucks.
VSV is OFF: Disconnected hose does not suck.
(f) Reconnect the vacuum hose.

OK	Go to step 9

NG

6	CHECK VACUUM HOSES(INTAKE MANIFOLD – VSV FOR EVAP, VSV FOR EVAP – CHARCOAL CANISTER)

(a) Check that the vacuum hose is connected correctly.
(b) Check the vacuum hose for looseness and disconnection.
(c) Check the vacuum hose for cracks, hole, damage and blockage.

NG	REPAIR OR REPLACE VACUUM HOSE

OK

7	INSPECT VSV FOR EVAP(OPERATION) (See page 12–1)

NG	REPLACE VSV FOR EVAP

OK

8	CHECK HARNESS AND CONNECTOR(EFI RELAY – VSV FOR EVAP, VSV FOR EVAP – ECM)

Wire Harness Side:

V3 VSV for EVAP Connector

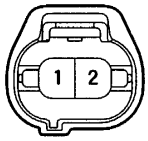

Front View

A51984 A52933

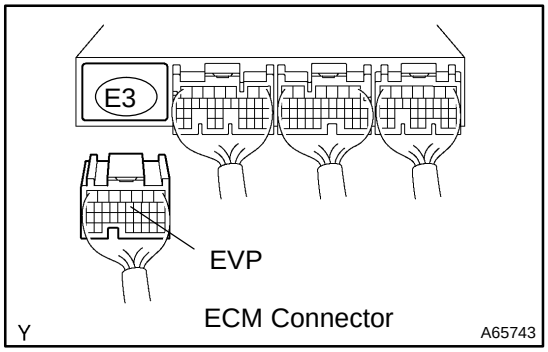

Engine Room R/B:

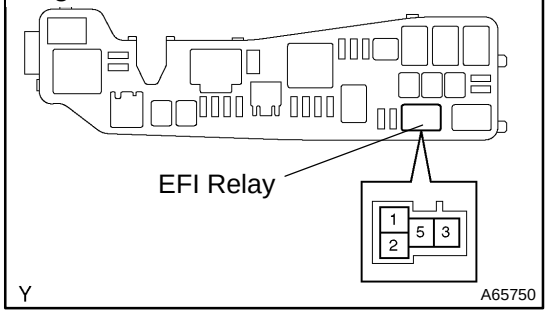

(a) Check the harness and the connector between the VSV for EVAP and ECM.

(1) Disconnect the V3 VSV for EVAP connector.

(2) Disconnect the E3 ECM connector.

(3) Check the resistance between the wire harness side connectors.

Standard (Check for open):

Tester Connection	Specified Condition
VSV for EVAP (V3–1) – EVP (E3–12)	Below 1 Ω

Standard (Check for short):

Tester Connection	Specified Condition
VSV for EVAP (V3–1) or EVP (E3–12) – Body ground	10 kΩ or higher

(4) Reconnect the VSV for EVAP connector.

(5) Reconnect the ECM connector.

(b) Check the harness and the connector between the VSV for EVAP and EFI relay.

(1) Disconnect the V3 VSV for EVAP connector.

(2) Remove the EFI relay from the engine room R/B.

(3) Check the resistance between the wire harness side connectors.

Standard (Check for open):

Tester Connection	Specified Condition
VSV for EVAP (V3–2) – EFI relay (3)	Below 1 Ω

Standard (Check for short):

Tester Connection	Specified Condition
VSV for EVAP (V3–2) or EFI relay (3) – Body ground	10 kΩ or higher

(4) Reconnect the VSV for EVAP connector.

(5) Reinstall the EFI relay.

NG → **REPAIR OR REPLACE HARNESS OR CONNECTOR**

OK

REPLACE ECM (See page 10–11)

9	PERFORM ACTIVE TEST BY HAND–HELD TESTER(VSV FOR CCV)

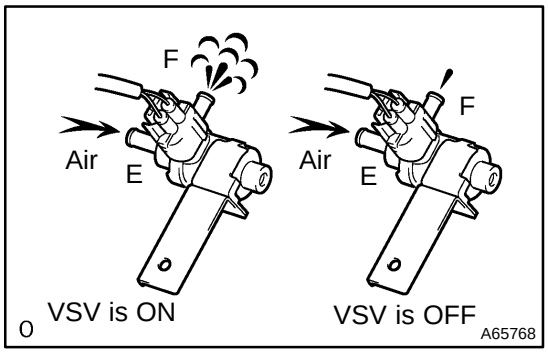

(a) Disconnect the vacuum hose of the VSV for CCV from the charcoal canister.
(b) Start the engine.
(c) Select the item "DIAGNOSIS/ENHANCED OBD II/ACTIVE TEST" mode on the hand–held tester.
(d) Select the item "CAN CTRL VSV/ALL" in the ACTIVE TEST and operate CAN CTRL VSV (Press the right or left button).
(e) Check the VSV operation when it is operated by the hand–held tester.
Result:
VSV is ON: Air from port E flows out through port F.
VSV is OFF: Air does not flow from port E to port F.

OK	Go to step 13

NG

10	CHECK VACUUM HOSES(VSV FOR CCV – CHARCOAL CANISTER)

(a) Check that the vacuum hose is connected correctly.
(b) Check the vacuum hose for looseness and disconnection.
(c) Check the vacuum hose for cracks, hole damage and blockage.

NG	REPAIR OR REPLACE VACUUM HOSES

OK

11	INSPECT VSV FOR CCV(OPERATION) (See page 12–6)

NG	REPLACE VSV FOR CCV

OK

12	CHECK HARNESS AND CONNECTOR(EFI RELAY – VSV FOR CCV, VSV FOR CCV – ECM)

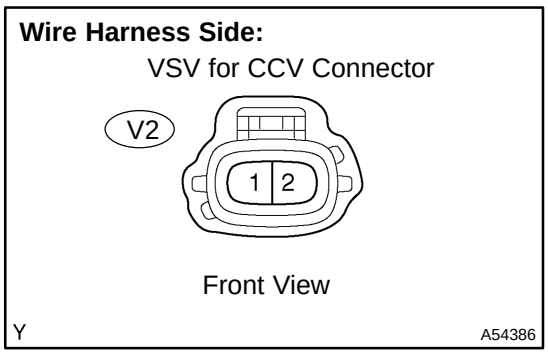

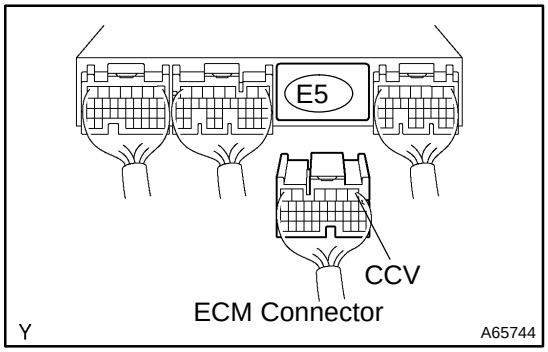

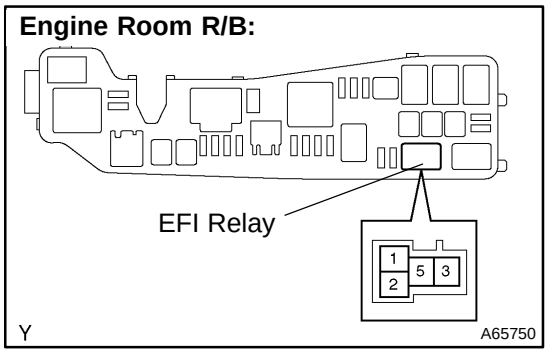

(a) Check the harness and connector between the VSV for CCV and ECM.
  (1) Disconnect the V2 VSV for CCV connector.
  (2) Disconnect the E5 ECM connector.
  (3) Check the resistance between the wire harness side connectors.

Standard (Check for open):

Tester Connection	Specified Condition
VSV for CCV (V2–1) – CCV (E5–1)	Below 1 Ω

Tester Connection	Specified Condition
VSV for CCV (V2–1) or CCV (E5–1) – Body ground	10 kΩ or higher

  (4) Reconnect the VSV for CCV connector.
  (5) Reconnect the ECM connector.

(b) Check the harness and the connector between the VSV for CCV and EFI relay.
  (1) Disconnect the V2 VSV for CCV connector.
  (2) Remove the EFI relay from the engine room R/B.
  (3) Check the resistance between the wire harness side connectors.

Standard (Check for open):

Tester Connection	Specified Condition
VSV for CCV (V2–2) – EFI relay (3)	Below 1 Ω

Standard (Check for short):

Tester Connection	Specified Condition
VSV for CCV (V2–2) or EFI relay (3) – Body ground	10 kΩ or higher

  (4) Reconnect the VSV for CCV connector.
  (5) Reinstall the EFI relay.

NG → **REPAIR OR REPLACE HARNESS OR CONNECTOR**

OK

REPLACE ECM (See page 10–11)

13	PERFORM ACTIVE TEST BY HAND–HELD TESTER(VSV FOR PRESSURE SWITCHING VALVE)

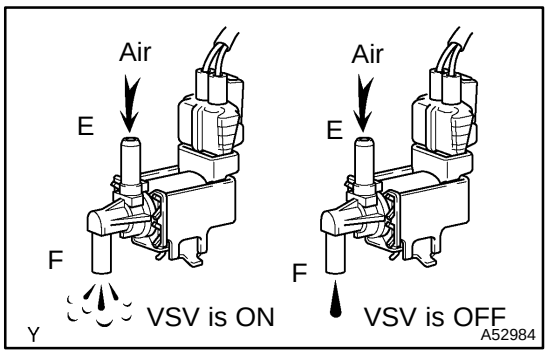

(a) Select the item ”DIAGNOSIS/ENHANCED OBD II/ACTIVE TEST” mode on the hand–held tester.

(b) Select the item ”TANK BYPASS VSV/ALL” in the ACTIVE TEST and operate TANK BYPASS VSV (Press the right or left button).

(c) Check the VSV operation when it is operated by the hand–held tester.

Result:

VSV is ON: Air from port E flows out through port F.

VSV is OFF: Air does not flow from port E to port F.

OK	Go to step 16

NG

14	INSPECT VSV FOR PRESSURE SWITCHING VALVE(OPERATION)

NG	REPLACE VSV FOR PRESSURE SWITCHING VALVE

OK

15	CHECK HARNESS AND CONNECTOR(EFI RELAY – VSV FOR PRESSURE SWITCHING VALVE, VSV FOR PRESSURE SWITCHING VALVE – ECM)

Wire Harness Side:

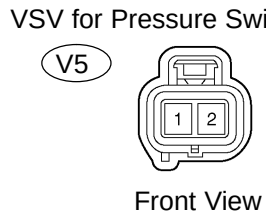

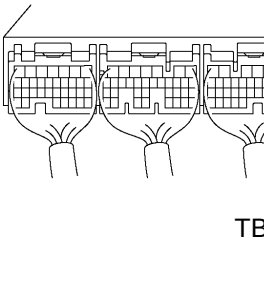

Engine Room R/B:

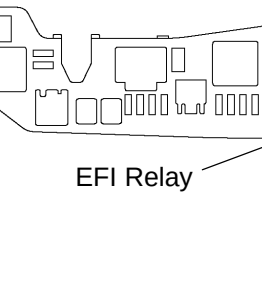

(a) Check the harness and the connector between the VSV for pressure switching valve and the ECM.

(1) Disconnect the V5 VSV for pressure switching valve connector.

(2) Disconnect the E6 ECM connector.

(3) Check the resistance between the wire harness side connectors.

Standard (Check for open):

Tester Connection	Specified Condition
VSV for pressure switching valve (V5–1) – TBP (E6–4)	Below 1 Ω

Standard (Check for short):

Tester Connection	Specified Condition
VSV for pressure switching valve (V5–1) or TBP (E6–4) – Body ground	10 kΩ or higher

(4) Reconnect the VSV for pressure switching valve connector.

(5) Reconnect the ECM connector.

(b) Check the harness and the connector between the VSV for pressure switching valve and EFI relay.

(1) Disconnect the V5 VSV for pressure switching valve connector.

(2) Remove the EFI relay from the engine room R/B.

(3) Check the resistance between the wire harness side connectors.

Standard (Check for open):

Tester Connection	Specified Condition
VSV for pressure switching valve (V5–2) – EFI relay (3)	Below 1 Ω

Standard (Check for short):

Tester Connection	Specified Condition
VSV for pressure switching valve (V5–2) or EFI relay (3) – Body ground	10 kΩ or higher

(4) Reconnect the VSV for pressure switching valve connector.

(5) Reinstall the EFI relay.

NG → **REPAIR OR REPLACE HARNESS OR CONNECTOR**

OK

REPLACE ECM (See page 10–11)

16	CHECK FOR EVAPORATIVE EMISSIONS LEAK(NEAR FUEL TANK)

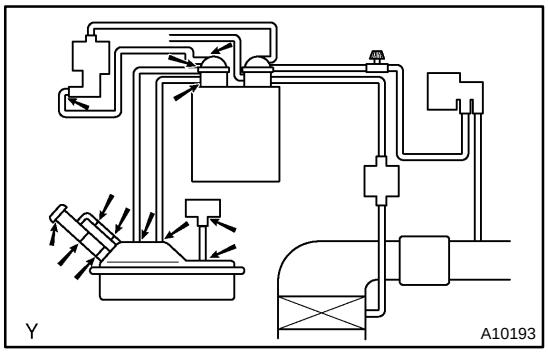

(a) Check whether hoses close to the fuel tank have been modified, and check if there are signs of any accident near the fuel tank.
  (1) Check the following parts for cracks, deformation or loose connection:
    - Fuel tank
    - Fuel tank filler pipe
    - Hoses and tubes around fuel tank

NG → **REPAIR OR REPLACE EVAPORATIVE EMISSIONS LEAK PART**

OK

17	CHECK VACUUM HOSES(VAPOR PRESSURE SENSOR – FUEL TANK, CHARCOAL CANISTER – VSV FOR PRESSURE SWITCHING VALVE)

(a) Check that the vacuum hose is connected correctly.
(b) Check the vacuum hose for looseness and disconnection.
(c) Check the vacuum hose for cracks, hole and damage.

NG → **REPAIR OR REPLACE VACUUM HOSE**

OK

18	CHECK HOSE AND TUBE(FUEL TANK – CHARCOAL CANISTER)

(a) Check the connection between the fuel tank and fuel EVAP pipe, the fuel EVAP pipe and under floor fuel tube, the under floor fuel tube and charcoal canister.
(b) Check the hose and the tube for cracks, hole and damage.

NG → **REPAIR OR REPLACE HOSE AND TUBE**

OK

19	INSPECT ECM(VC VOLTAGE)

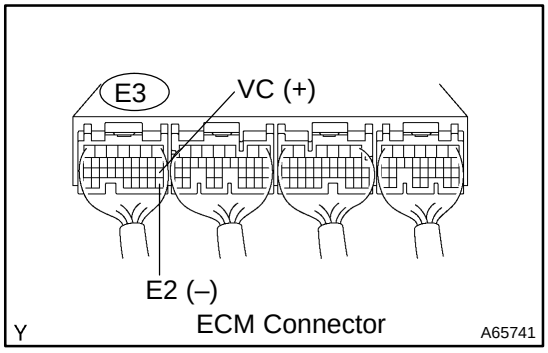

(a) Turn the ignition switch ON.
(b) Measure the voltage between the terminals of the E3 ECM connector.

Standard:

Tester Connection	Specified Condition
VC (E3–18) – E2 (E3–28)	4.5 to 5.5 V

NG → **REPLACE ECM (See page 10–11)**

OK

20 INSPECT ECM(PTNK VOLTAGE)

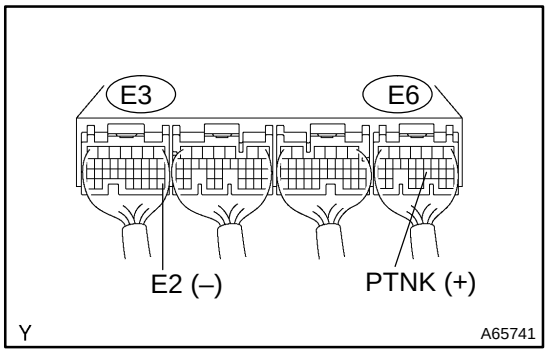

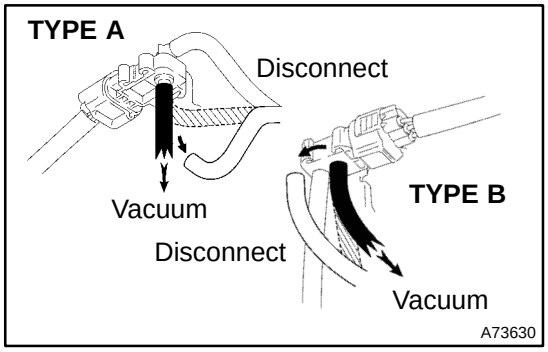

(a) Turn the ignition switch ON.
(b) Measure the voltage between terminals of the E3 and E6 ECM connectors.
(1) Disconnect the vacuum hose from the vapor pressure sensor.

Standard (1):

Tester Connection	Specified Condition
PTNK (E6–21) – E2 (E3–28)	2.9 to 3.7 V

NOTICE:

The vacuum applied to the vapor pressure sensor must be less than 66.7 kPa (500 mmHg, 19.7 in.Hg).

(2) Using the MITYVAC (Hand–held Vacuum Pump), apply a vacuum of 4.0 kPa (30 mmHg, 1.18 in.Hg) to the vapor pressure sensor.

Standard (2):

Tester Connection	Specified Condition
PTNK (E6–21) – E2 (E3–28)	0.5 V or less

(3) Reconnect the vacuum hose.

OK → **Go to step 22**

NG

21 CHECK HARNESS AND CONNECTOR(VAPOR PRESSURE SENSOR – ECM)

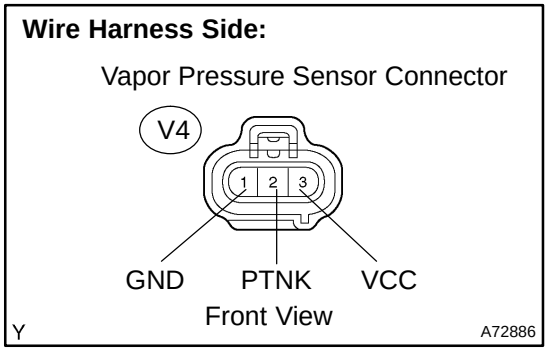

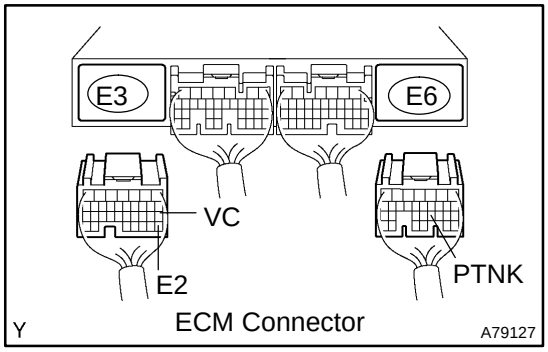

(a) Disconnect the V4 vapor pressure sensor connector.
(b) Disconnect the E3 and E6 ECM connectors.
(c) Check the resistance between the wire harness side connectors.

Standard (Check for open):

Tester Connection	Specified Condition
PTNK (V4–2) – PTNK (E6–21)	Below 1 Ω
GND (V4–1) – E2 (E3–28)	
VCC (V4–3) – VC (E3–18)	

Standard (Check for short):

Tester Connection	Specified Condition
PTNK (V4–2) or PTNK (E6–21) – Body ground	10 kΩ or higher
VCC (V4–3) or VC (E3–18) – Body ground	

(d) Reconnect the vapor pressure sensor connector.
(e) Reconnect the ECM connectors.

NG → **REPAIR OR REPLACE HARNESS OR CONNECTOR**

OK

REPLACE ECM (See page 10–11)

22	INSPECT FUEL TANK INLET VALVE ASSY

NG → REPLACE FUEL TANK INLET VALVE ASSY

OK

23	INSPECT FUEL TANK ASSY

NG → REPLACE FUEL TANK ASSY

OK

24	INSPECT CHARCOAL CANISTER ASSY(CRACKS, HOLE AND DAMAGE)

NG → REPAIR OR REPLACE CHARCOAL CANISTER ASSY

OK

REPLACE ECM (See page 10–11)

OBDII scan tool (excluding Hand–held Tester):

1	CHECK FUEL TANK CAP ASSY(CHECK THAT FUEL TANK CAP IS TOYOTA GEHUINE PARTS)

NG → REPLACE TO GENUINE PARTS

OK

2	CHECK THAT FUEL TANK CAP IS CORRECTLY INSTALLED

NG → CORRECTLY INSTALL FUEL TANK CAP

OK

3	INSPECT FUEL TANK CAP ASSY (See page 12–1)

NG → REPLACE FUEL TANK CAP ASSY

OK

4	CHECK FILLER NECK FOR DAMAGE

(a) Remove the fuel tank cap.
(b) Visually check the fuel inlet pipe for damage.

NG → REPLACE FUEL TANK INLET PIPE SUB–ASSY

OK

5	CHECK FOR EVAPORATIVE EMISSIONS LEAK(NEAR FUEL TANK OR CHACOAL CANISTER)

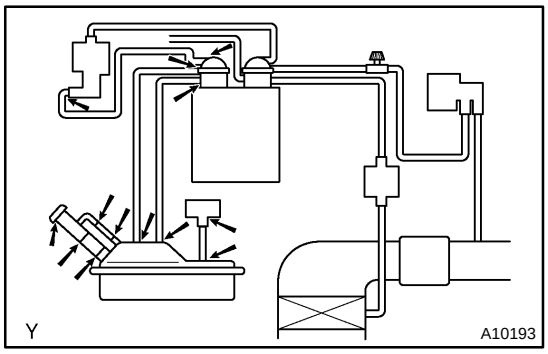

(a) Check whether hoses close to the fuel tank have been modified, and check if there are signs of any accident near the fuel tank or the charcoal canister.
  (1) Check the following parts for cracks, deformation or loose connection:
    - Fuel tank
    - Charcoal canister
    - Fuel tank filler pipe
    - Hoses and tubes around fuel tank and charcoal canister

NG → REPAIR OR REPLACE EVAPORATIVE EMISSIONS LEAK PART

OK

6	CHECK VACUUM HOSES(VAPOR PRESSURE SENSOR – FUEL TANK, CHARCOAL CANISTER – VSV FOR PRESSURE SWITCHING VALVE)

(a) Check that the vacuum hose is connected correctly.
(b) Check the vacuum hose for looseness and disconnection.
(c) Check the vacuum hose for cracks, hole and damage.

NG → REPAIR OR REPLACE VACUUM HOSE

OK

7	CHECK HOSE AND TUBE(FUEL TANK – CHARCOAL CANISTER)

(a) Check the connection between the fuel tank and fuel EVAP pipe, the fuel EVAP pipe and under floor fuel tube, the under floor fuel tube and charcoal canister.
(b) Check the hose and the tube for cracks, hole and damage.

NG → REPAIR OR REPLACE HOSE AND TUBE

OK

8	CHECK VACUUM HOSES((5), (6), (7), (8) AND (9) IN FIG. 1 IN CIRCUIT DESCRIPTION)

(a) Check that the vacuum hose is connected correctly.
(b) Check the vacuum hose for looseness and disconnection.
(c) Check the vacuum hose for cracks, hole and damage.

NG → REPAIR OR REPLACE VACUUM HOSES

OK

9	CHECK EACH VSV CONNECTOR FOR LOOSENESS AND DISCONNECTION(VSV FOR EVAP, VSV FOR CCV, VSV FOR PRESSURE SWITCHING VALVE)

NG → REPAIR OR CONNECT VSV AND SENSOR CONNECTOR

OK

10	INSPECT CHARCOAL CANISTER ASSY(CRACKS, HOLE AND DAMAGE)

NG → CHECK AND REPLACE CHARCOAL CANISTER ASSY

OK

11	INSPECT ECM(VC VOLTAGE)

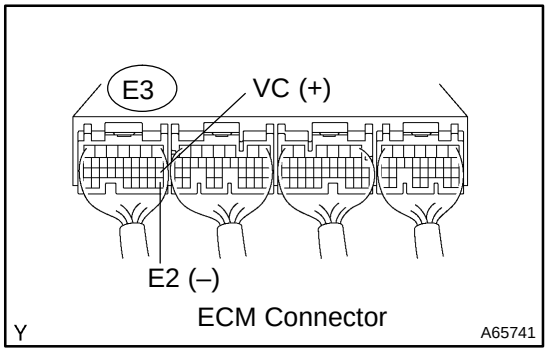

(a) Turn the ignition switch ON.
(b) Measure voltage between the terminals of the E3 ECM connector.

Standard:

Tester Connection	Specified Condition
VC (E3–18) – E2 (E3–28)	4.5 to 5.5 V

NG → REPLACE ECM (See page 10–11)

OK

12	INSPECT ECM(PTNK VOLTAGE)

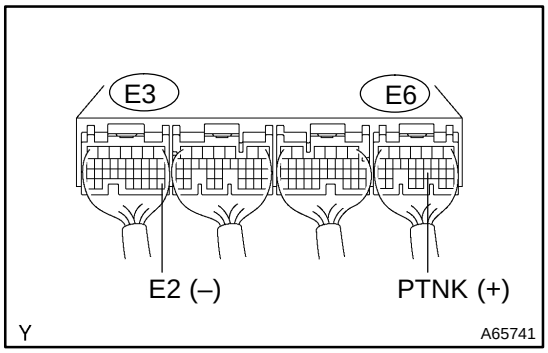

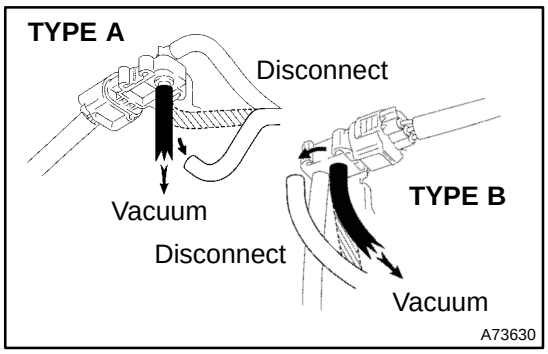

(a) Turn the ignition switch ON.

(b) Measure the voltage between terminals of the E3 and E6 ECM connectors.

(1) Disconnect the vacuum hose from the vapor pressure sensor.

Standard (1):

Tester Connection	Specified Condition
PTNK (E6–21) – E2 (E3–28)	2.9 to 3.7 V

NOTICE:

The vacuum applied to the vapor pressure sensor must be less than 66.7 kPa (500 mmHg, 19.7 in.Hg).

(2) Using the MITYVAC (Hand–held Vacuum Pump), apply a vacuum of 4.0 kPa (30 mmHg, 1.18 in.Hg) to the vapor pressure sensor.

Standard (2):

Tester Connection	Specified Condition
PTNK (E6–21) – E2 (E3–28)	0.5 V or less

(3) Reconnect the vacuum hose from the vapor pressure sensor.

OK	Go to step 14

NG

13 CHECK HARNESS AND CONNECTOR(VAPOR PRESSURE SENSOR – ECM)

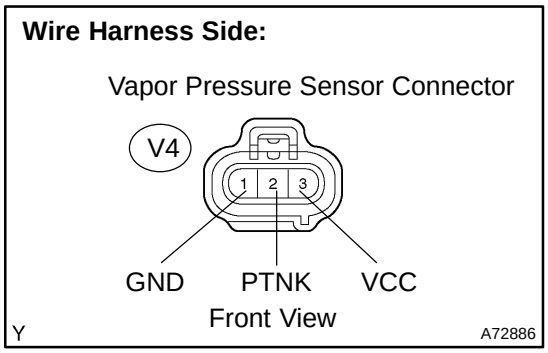

(a) Disconnect the V4 vapor pressure sensor connector.
(b) Disconnect the E3 and E6 ECM connectors.
(c) Check the resistance between the wire harness side connectors.

Standard (Check for open):

Tester Connection	Specified Condition
PTNK (V4–2) – PTNK (E6–21)	Below 1 Ω
GND (V4–1) – E2 (E3–28)	
VCC (V4–3) – VC (E3–18)	

Standard (Check for short):

Tester Connection	Specified Condition
PTNK (V4–2) or PTNK (E6–21) – Body ground	10 kΩ or higher
VCC (V4–3) or VC (E3–18) – Body ground	

(d) Reconnect the vapor pressure sensor connector.
(e) Reconnect the ECM connectors.

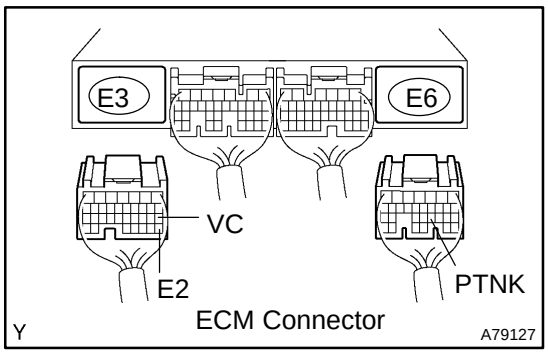

NG → **REPAIR OR REPLACE HARNESS OR CONNECTOR**

OK

REPLACE ECM (See page 10–11)

14 INSPECT VSV FOR EVAP(FUNCTION)

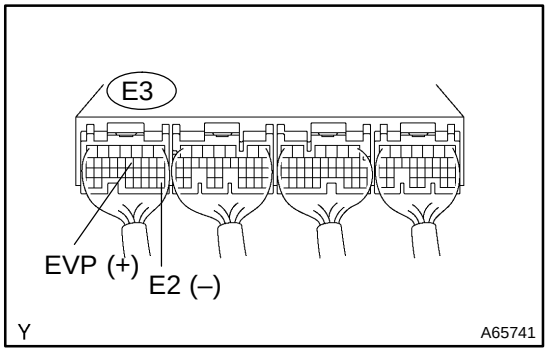

(a) Turn the ignition switch ON.
(b) Check the VSV function.
(1) Connect between terminals EVP and E2 of the ECM connector (VSV ON).

VSV is ON:
Air from port E flows out through port F

(2) Disconnect between terminals EVP and E2 of the ECM connector (VSV OFF).

VSV is OFF:
Air does not flow port E to port F

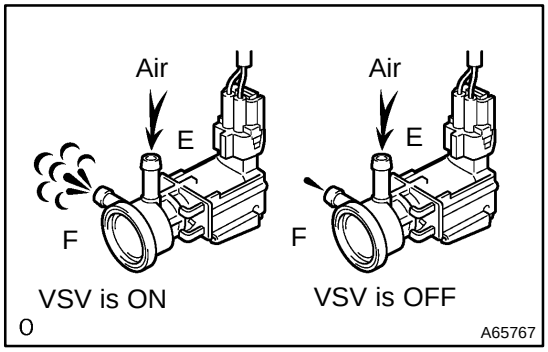

OK → **Go to step 17**

NG

15	INSPECT VSV FOR EVAP(OPERATION) (See page 12–6)

NG → REPLACE VSV FOR EVAP

OK

16	CHECK HARNESS AND CONNECTOR(EFI RELAY – VSV FOR EVAP, VSV FOR EVAP – ECM)

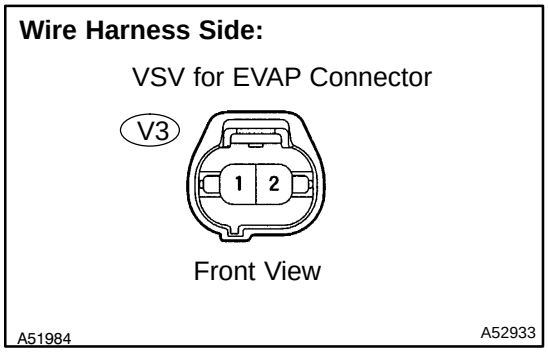

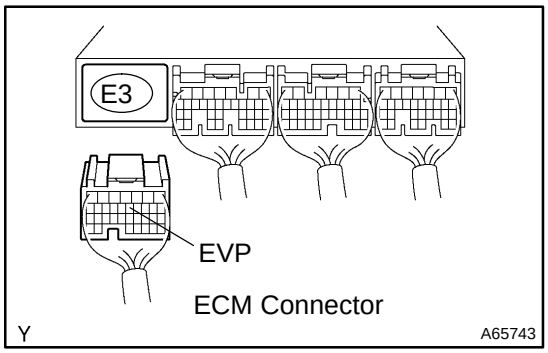

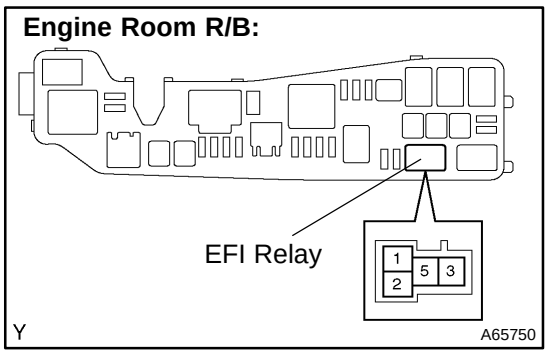

(a) Check the harness and connector between the VSV for EVAP and ECM.
  (1) Disconnect the V3 VSV for EVAP connector.
  (2) Disconnect the E3 ECM connector.
  (3) Check the resistance between the wire harness side connectors.

Standard (Check for open):

Tester Connection	Specified Condition
VSV for EVAP (V3–1) – EVP (E3–12)	Below 1 Ω

Standard (Check for short):

Tester Connection	Specified Condition
VSV for EVAP (V3–1) or EVP (E3–12) – Body ground	10 kΩ or higher

  (4) Reconnect the VSV for EVAP connector.
  (5) Reconnect the ECM connector.

(b) Check the harness and connector between the VSV for EVAP and EFI relay.
  (1) Disconnect the V3 VSV for EVAP connector.
  (2) Remove the EFI relay from the engine room R/B.
  (3) Check the resistance between the wire harness side connectors.

Standard (Check for open):

Tester Connection	Specified Condition
VSV for EVAP (V3–2) – EFI relay (3)	Below 1 Ω

Standard (Check for short):

Tester Connection	Specified Condition
VSV for EVAP (V3–2) or EFI relay (3) – Body ground	10 kΩ or higher

  (4) Reconnect the VSV for EVAP connector.
  (5) Reinstall the EFI relay.

NG → REPAIR OR REPLACE HARNESS OR CONNECTOR

OK

REPLACE ECM (See page 10–11)

17	INSPECT VSV FOR CCV(FUNCTION)

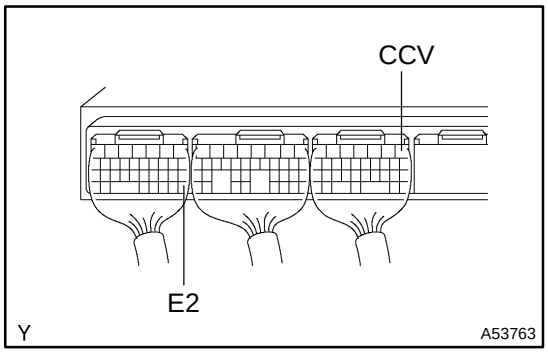

(a) Turn the ignition switch ON.
(b) Check the VSV function.
(1) Connect between terminals CCV and E2 of the ECM connector (VSV ON).
VSV is ON:
Air from port E flows out through port F
(2) Disconnect between terminals CCV and E2 of the ECM connector (VSV OFF).
VSV is OFF:
Air does not flow from port E to port F

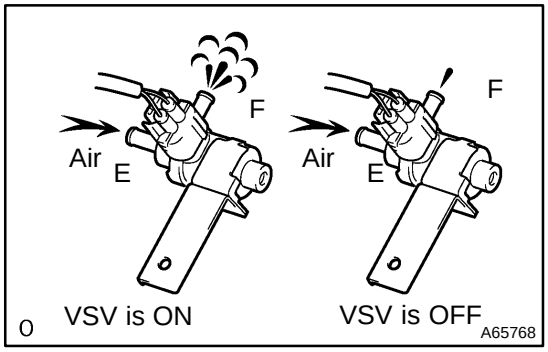

OK → **Go to step 20**

NG

18	INSPECT VSV FOR CCV(OPERATION) (See page 12–6)

NG → **REPLACE VSV FOR CCV**

OK

19	CHECK HARNESS AND CONNECTOR(EFI RELAY – VSV FOR CCV, VSV FOR CCV – ECM)

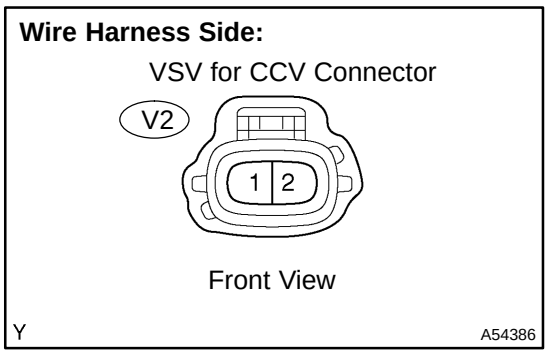

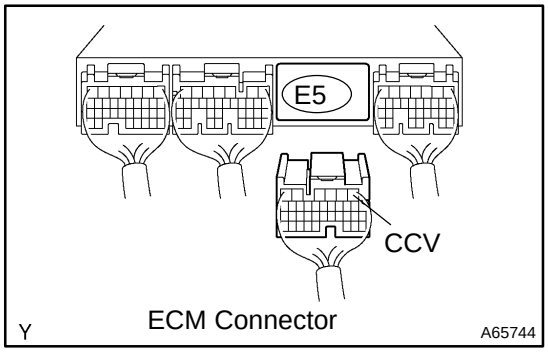

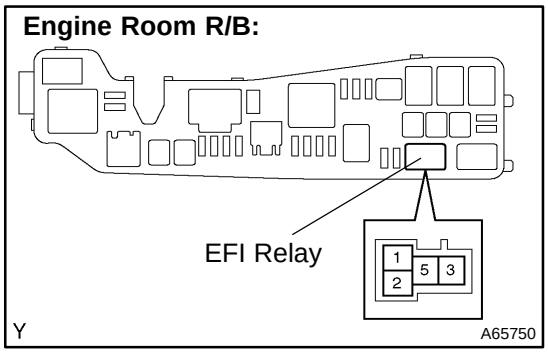

(a) Check the harness and the connector between the VSV for CCV and ECM.
  (1) Disconnect the V2 VSV for CCV connector.
  (2) Disconnect the E5 ECM connector.
  (3) Check the resistance between the wire harness side connectors.

Standard (Check for open):

Tester Connection	Specified Condition
VSV for CCV (V2–1) – CCV (E5–1)	Below 1 Ω

Standard (Check for short):

Tester Connection	Specified Condition
VSV for CCV (V2–1) or CCV (E5–1) – Body ground	10 kΩ or higher

  (4) Reconnect the VSV for CCV connector.
  (5) Reconnect the ECM connector.

(b) Check the harness and the connector between the VSV for CCV and EFI relay.
  (1) Disconnect the V2 VSV for CCV connector.
  (2) Remove the EFI relay from the engine room R/B.
  (3) Check the resistance between the wire harness side connectors.

Standard (Check for open):

Tester Connection	Specified Condition
VSV for CCV (V2–2) – EFI relay (3)	Below 1 Ω

Standard (Check for short):

Tester Connection	Specified Condition
VSV for CCV (V2–2) or EFI relay (3) – Body ground	10 kΩ or higher

  (4) Reconnect the VSV for CCV connector.
  (5) Reinstall the EFI relay.

NG → **REPAIR OR REPLACE HARNESS OR CONNECTOR**

OK

REPLACE ECM (See page 10–11)

20	INSPECT VSV FOR PRESSURE SWITCHING VALVE(FUNCTION)

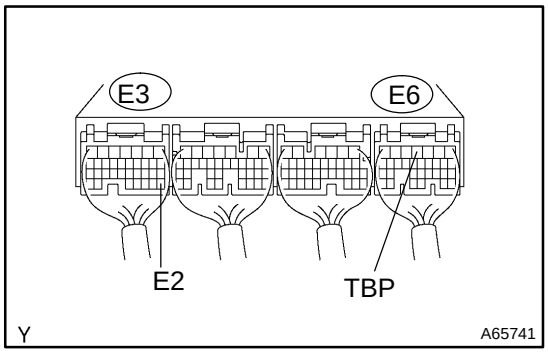

(a) Turn the ignition switch ON.
(b) Check the VSV function.
(1) Connect between terminals TBP and E2 of the ECM connector (VSV ON).
VSV is ON: Air from port E flows out through port F
(2) Disconnect between terminals TBP and E2 of the ECM connector (VSV OFF).
VSV is OFF: Air does not from flow port E to port F

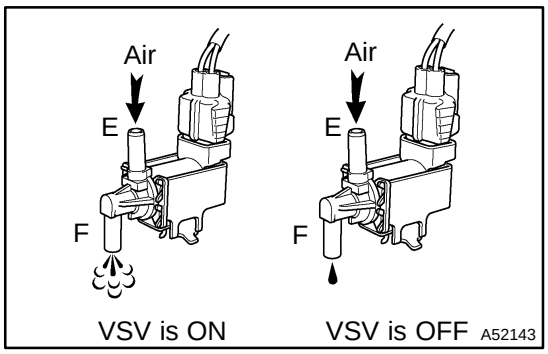

OK → **Go to step 23**

NG

21	INSPECT VSV FOR PRESSURE SWITCHING VALVE(OPERATION) (See page 12–6)

NG → **REPLACE VSV FOR PRESSURE SWITCHING VALVE**

OK

22	CHECK HARNESS AND CONNECTOR(EFI RELAY – VSV FOR PRESSURE SWITCHING VALVE, VSV FOR PRESSURE SWITCHING VALVE – ECM)

Wire Harness Side:

VSV for Pressure Switching Valve

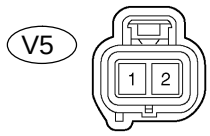

Front View

Y A72890

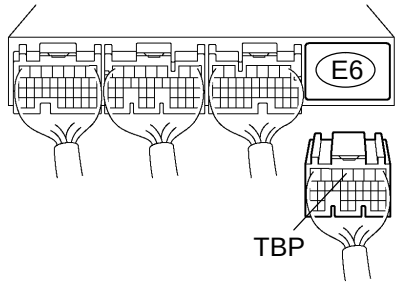

ECM Connector

Y A65748

Engine Room R/B:

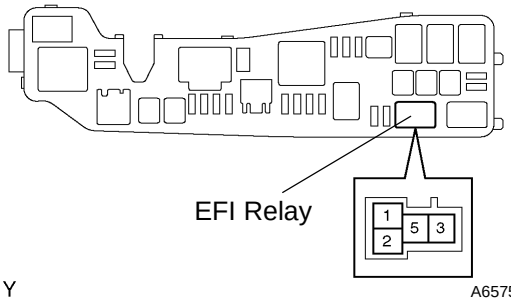

Y A65750

(a) Check the harness and the connector between the VSV for pressure switching valve and ECM.

(1) Disconnect the V5 VSV for pressure switching valve connector.

(2) Disconnect the E6 ECM connector.

(3) Check the resistance between the wire harness side connectors.

Standard (Check for open):

Tester Connection	Specified Condition
VSV for pressure switching valve (V5–1) – TBP (E6–4)	Below 1 Ω

Standard (Check for short):

Tester Connection	Specified Condition
VSV for pressure switching valve (V5–1) or TBP (E6–4) – Body ground	10 kΩ or higher

(4) Reconnect the VSV for pressure switching valve connector.

(5) Reconnect the ECM connector.

(b) Check the harness and the connector between the VSV for pressure switching valve and EFI relay.

(1) Disconnect the V5 VSV for pressure switching valve connector.

(2) Remove the EFI relay from the engine room R/B.

(3) Check the resistance between the wire harness side connectors.

Standard (Check for open):

Tester Connection	Specified Condition
VSV for pressure switching valve (V5–2) – EFI relay (3)	Below 1 Ω

Standard (Check for short):

Tester Connection	Specified Condition
VSV for pressure switching valve (V5–2) or EFI relay (3) – Body ground	10 kΩ or higher

(4) Reconnect the VSV for pressure switching valve connector.

(5) Reinstall the EFI relay from.

NG → **REPAIR OR REPLACE HARNESS OR CONNECTOR**

OK

REPLACE ECM (See page 10–11)

23	INSPECT FUEL TANK INLET VALVE ASSY

NG → REPLACE FUEL TANK INLET VALVE ASSY

OK

24	INSPECT FUEL TANK ASSY

NG → REPLACE FUEL TANK ASSY

OK

IT IS LIKELY THAT VEHICLE USER DID NOT PROPERLY CLOSE FUEL TANK CAP

DTC	P0451	EVAPORATIVE EMISSION CONTROL SYSTEM PRESSURE SENSOR RANGE/PERFORMANCE

DTC	P0452	EVAPORATIVE EMISSION CONTROL SYSTEM PRESSURE SENSOR/SWITCH LOW INPUT

DTC	P0453	EVAPORATIVE EMISSION CONTROL SYSTEM PRESSURE SENSOR/SWITCH HIGH INPUT

MONITOR DESCRIPTION

DTC P0451, P0452 or P0453 is recorded by the ECM when the vapor pressure sensor malfunctions.

P0451

The ECM senses pressure in the fuel tank using the vapor pressure sensor. The ECM supplies the sensor with a regulated 5 V reference–voltage and the sensor returns a signal voltage between 0.5 V and 4.5 V according to the pressure level in the fuel tank.

When the pressure in the fuel tank is low, the output voltage of the vapor pressure sensor is low. When it is high, the output voltage is high.

For this DTC P0451, the ECM checks for a ”noisy” sensor or a ”stuck” sensor.

The ECM checks for the ”noisy” sensor by monitoring the fuel tank pressures when the vehicle is stationary and there should be little variation in the tank pressure. If the indicated pressure varies beyond specified limits, the ECM will illuminate the MIL and a DTC is set.

The ECM checks for the ”stuck” sensor by monitoring the fuel tank pressure for an extended time period. If the indicated pressure does not change over this period, the ECM will conclude that the fuel tank pressure sensor is malfunctioning. The ECM will illuminate the MIL and a DTC is set.

P0452 and P0453

The ECM senses pressure in the fuel tank using the vapor pressure sensor. The ECM supplies the sensor with a regulated 5 V reference–voltage and the sensor returns a signal voltage between 0.5 V and 4.5 V according to the pressure level in the fuel tank.

When the pressure in the fuel tank is low, the output voltage of the vapor pressure sensor is low. When it is high, the output voltage is high.

If the output voltage of the vapor pressure sensor is out of the normal range, the ECM will determine that there is a malfunction in the sensor or sensor circuit.

When pressure indicated by the vapor pressure sensor deviates below –3.999 kpa (–30 mmHg) or above 1.999 kpa (15 mmHg), the ECM interprets this as a malfunction in the vapor pressure sensor. The ECM will turn on the MIL and a DTC will be set.

Fig. 1

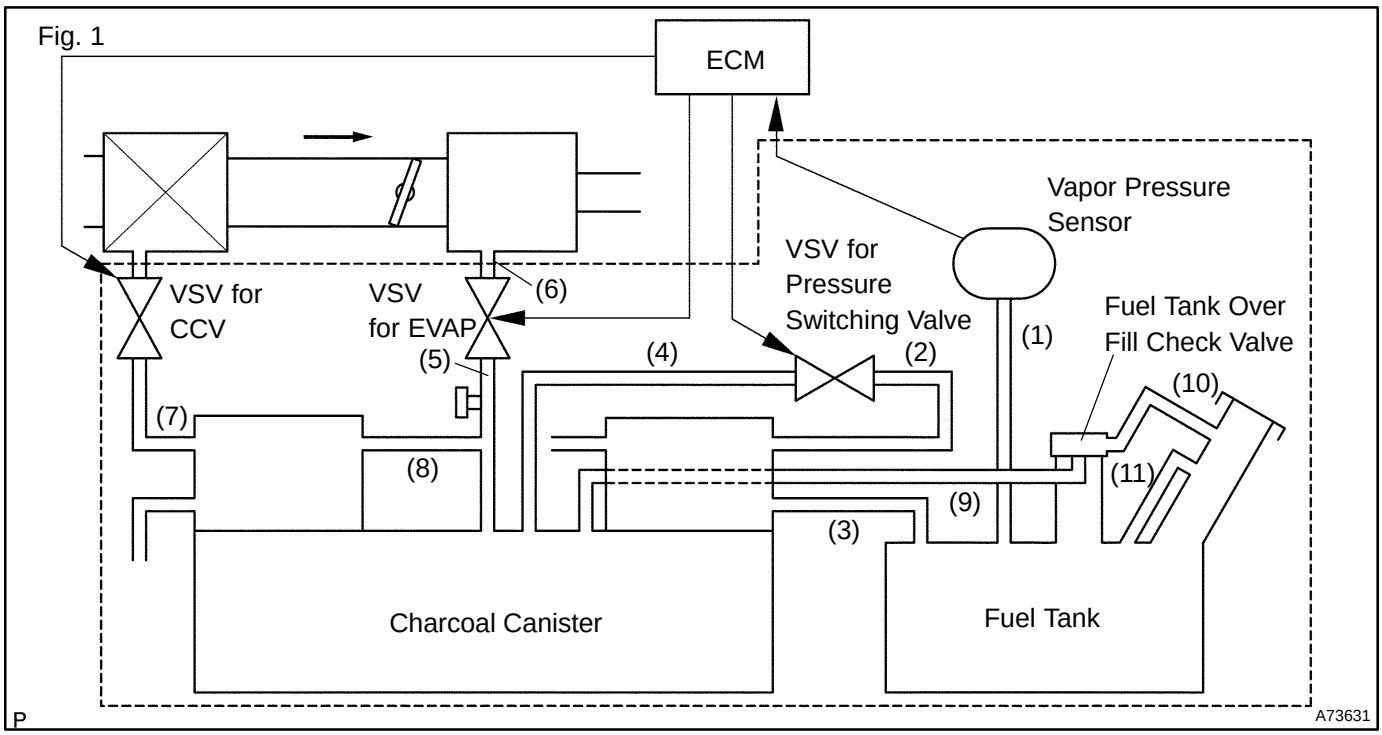

DTC No.	DTC Detection Condition	Trouble Area
P0451	• Vapor pressure sensor's voltage output extremely changes under the following conditions: (a) and (b) (2 trip detection logic): (a) Vehicle speed: 0 km/h (0mph), Engine speed: Idling, and VSV for pressure switching valve: OFF (b) Vapor pressure sensor value greater than opening pressure value of charcoal canister • Vapor pressure sensor's voltage output remains at fixed value	• Open or short in vapor pressure sensor circuit • Vapor pressure sensor • ECM
P0452	Open in vapor pressure sensor circuit	
P0453	Short in vapor pressure sensor circuit	

MONITOR STRATEGY

P0451

Related DTCs	P0451	Evaporative emission control system pressure sensor range/performance
Required sensors/components	Main sensors	Vapor pressure sensor
	Related sensors	Mass air flow sensor, engine coolant temperature sensor
Frequency of operation	Once per driving cycle	
Duration	Signal fluctuation (noise) monitoring: 10 seconds No signal change (stuck) monitoring: 20 minutes	
MIL operation	2 driving cycles	
Sequence of operation	None	

P0452 and P0453

Related DTCs	P0452	Evaporative emission control system pressure sensor/switch low input
	P0453	Evaporative emission control system pressure sensor/switch high input
Required sensors/components	Main sensors	Vapor pressure sensor
	Related sensors	Mass air flow sensor, engine coolant temperature sensor
Frequency of operation	Once per driving cycle	
Duration	7 seconds	
MIL operation	2 driving cycles	
Sequence of operation	None	

TYPICAL ENABLING CONDITIONS

P0451

Item	Specification	
	Minimum	Maximum
The monitor will run whenever the following DTCs are not present	See ”List of Disable a Monitor” (On page 05–25)	
Signal fluctuation (noise) monitoring:		
Altitude	–	2,400 m (7,872 ft)
Difference between intake air temperature and engine coolant temperature at engine start	–7°C (–19.4°F)	11.1°C (52°F)
Engine coolant temperature at engine start	4.4°C (40°F)	35°C (95°F)
Intake coolant temperature at engine start	4.4°C (40°F)	35°C (95°F)
Vehicle stop and idling	5 seconds	15 seconds
Stuck monitoring:		
Altitude	–	2,400 m (7,872 ft)
Vapor pressure sensor	No malfunction	
Difference between intake air temperature and engine coolant temperature at engine start	–7°C (–19.4°F)	11.1°C (52°F)
Engine coolant temperature at engine start	4.4°C (40°F)	35°C (95°F)
Intake air coolant temperature at engine start	4.4°C (40°F)	35°C (95°F)
Time after engine start	6 seconds	–

P0452 and P0453

Item	Specification	
	Minimum	Maximum
The monitor will run whenever the following DTCs are not present	See ”List of Disable a Monitor” (On page 05–25)	
Difference between intake air temperature and engine coolant temperature at engine start	–	12°C (22°F)
Engine coolant temperature at engine start	10°C (50°F)	35°C (95°F)
Intake air temperature at engine start	10°C (50°F)	35°C (95°F)
Engine	Running	

TYPICAL MALFUNCTION THRESHOLDS

P0451

Detection Criteria	Threshold
Signal fluctuation (noise) monitoring:	
The number of times the output changed ±0.667 kpa (5 mmhg) or more during 5 to 15 seconds after idling and vehicle stop	7 times or more
No signal change (stuck) monitoring:	
Fuel tank pressure "no change" time (less than 0.18 kpa (1.35 mmHg) after engine start)	20 minutes or more

P0452 and P0453

Detection Criteria	Threshold
P0452:	
Fuel tank pressure	Less than –3.999 kPa (–30 mmHg)
P0453:	
Fuel tank pressure	1.999 kPa (15 mmHg) or more

WIRING DIAGRAM

Refer to DTC No. P0441 on page 05–193.

INSPECTION PROCEDURE

HINT:

- If different DTCs related to different systems that have terminal E2 as the ground terminal are output simultaneously, terminal E2 may be open.
- If DTC P0441 (Purge Flow), P0446 (VSV for CCV), P0451, P0452 or P0453 (Evaporative Pressure Sensor) is output with DTC P0442 or P0456, troubleshoot DTC P0441, P0446, P0451, P0452 or P0453 first. If no malfunction is detected, troubleshoot DTC P0442 or P0456 next.
- Read freeze frame data using the hand–held tester or the OBD II scan tool. Freeze frame data records the engine conditions when a malfunction is detected. When troubleshooting, it is useful for determining whether the vehicle was running or stopped, the engine was warmed up or not, the air–fuel ratio was lean or rich, etc. at the time of the malfunction.
- If the ENGINE RUN TIME in the freeze frame data is less than 200 seconds, carefully check the vapor pressure sensor.

1 INSPECT ECM(VC VOLTAGE)

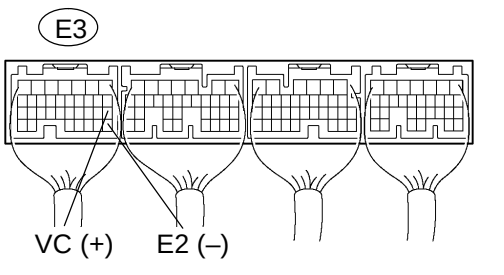

(a) Turn the ignition switch ON.

(b) Measure the voltage between the terminals of the E3 ECM connector.

Standard:

Tester Connection	Specified Condition
VC (E3–18) – E2 (E3–28)	4.5 to 5.5 V

NG → **REPLACE ECM (See page 10–11)**

OK

2 INSPECT ECM(PTNK VOLTAGE)

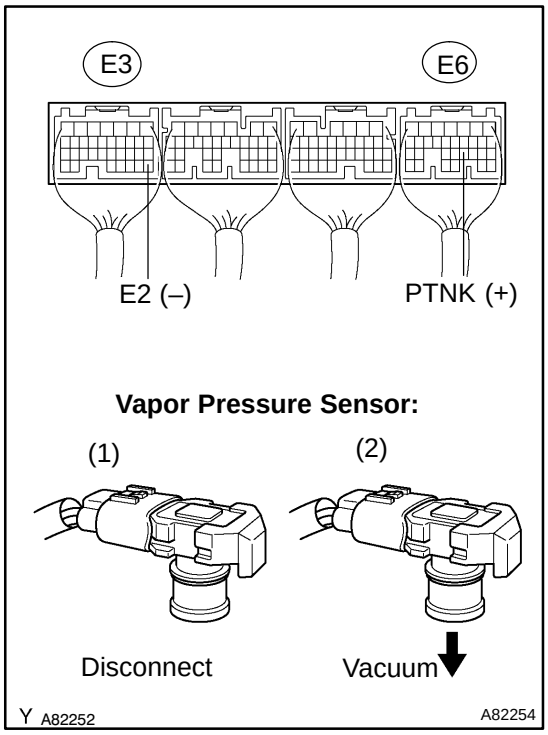

(a) Turn the ignition switch ON.
(b) Measure the voltage between the terminals of the E3 and E6 ECM connectors.
(1) Disconnect the vacuum hose from the vapor pressure sensor.

Standard (1):

Tester Connection	Specified Condition
PTNK (E6–21) – E2 (E3–28)	2.9 to 3.7 V

(2) Using the MITYVAC (Hand–Held Vacuum Pump), apply a vacuum of 4.0 kPa (30 mmHg, 1.18 in.Hg) to the vapor pressure sensor.

NOTICE:
The vacuum applied to the vapor pressure sensor must be less than 66.7 kPa (500 mmHg, 19.7 in.Hg).

Standard (2):

Tester Connection	Specified Condition
PTNK (E6–21) – E2 (E3–28)	0.5 V or less

(3) Reconnect the vacuum hose.

OK → **REPLACE ECM (See page 10–11)**

NG

3 CHECK HARNESS AND CONNECTOR(VAPOR PRESSURE SENSOR – ECM)

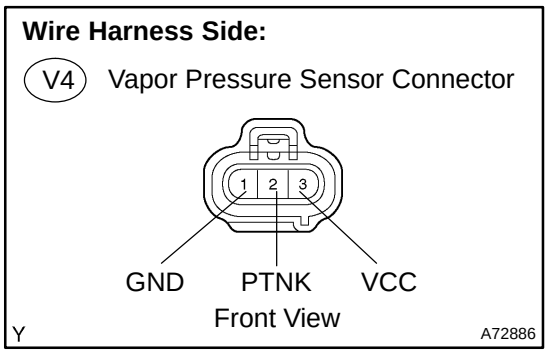

(a) Disconnect the V4 vapor pressure sensor connector.
(b) Disconnect the E3 and E6 ECM connectors.
(c) Check the resistance between the wire harness side connectors.

Standard (Check for open):

Tester Connection	Specified Condition
PTNK (V4–2) – PTNK (E6–21)	Below 1 Ω
GND (V4–1) – E2 (E3–28)	
VCC (V4–3) – VC (E3–18)	

Standard (Check for short):

Tester Connection	Specified Condition
PTNK (V4–2) or PTNK (E6–21) – Body ground	10 kΩ or higher
VCC (V4–3) or VC (E3–18) – Body ground	

(d) Reconnect the ECM connectors.
(e) Reconnect the vapor pressure sensor connector.

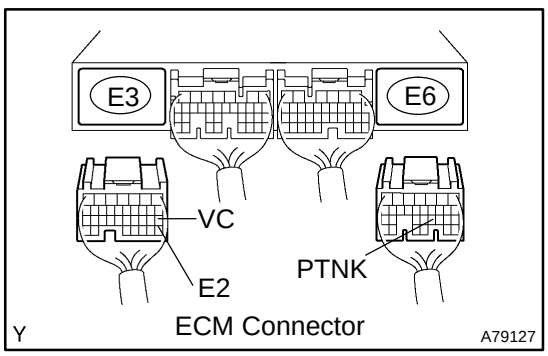

NG → **REPAIR OR REPLACE HARNESS OR CONNECTOR**

OK

REPLACE VAPOR PRESSURE SENSOR ASSY

DTC	P0500	VEHICLE SPEED SENSOR ”A”

CIRCUIT DESCRIPTION

The vehicle equipped with ABS detects a vehicle speed using the stability control ECU and wheel speed sensor. This sensor monitors a wheel rotation speed and sends the signal to the ECU.
The stability control ECU converts these wheel speed signals into a 4–pulse signal and outputs it to the ECM via the combination meter.
The ECM determines the vehicle speed based on the frequency of these pulse signals.
In the vehicle without ABS, the No. 1 vehicle speed sensor outputs a 4–pulse signal for every revolution of the rotor shaft, which is rotated by the transmission output shaft via the driven gear. After this signal is converted into a more precise rectangular waveform by the waveform shaping circuit inside the combination meter, it is then transmitted to the ECM. The ECM determines the vehicle speed based on the frequency of these pulse signal.

w/ ABS:

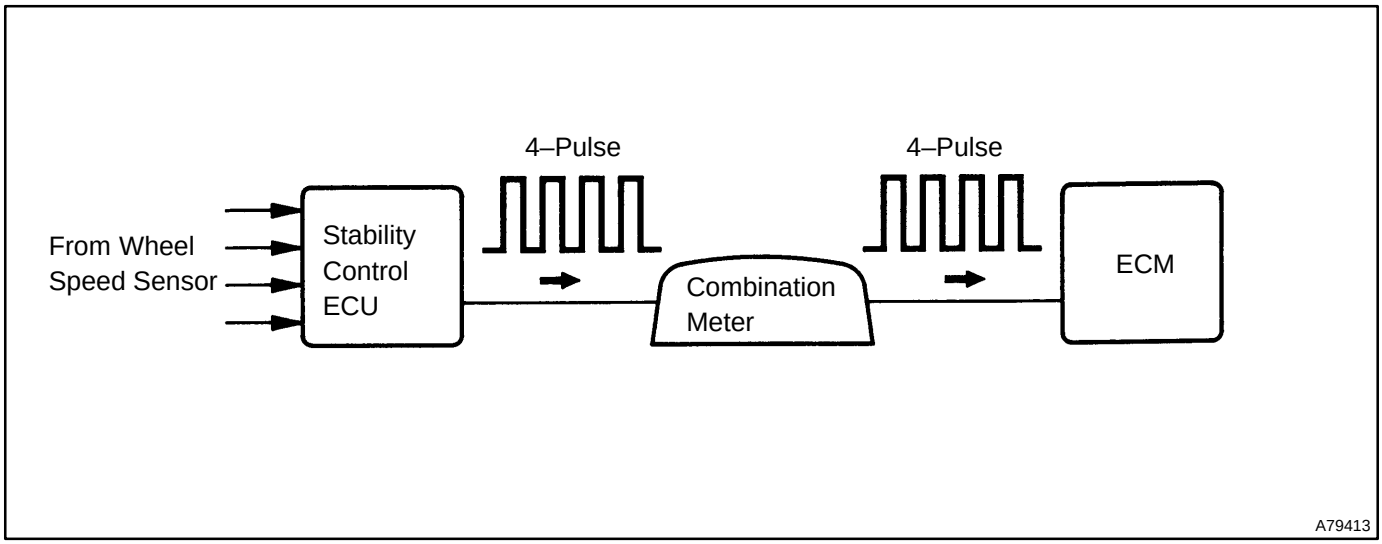

w/o ABS:

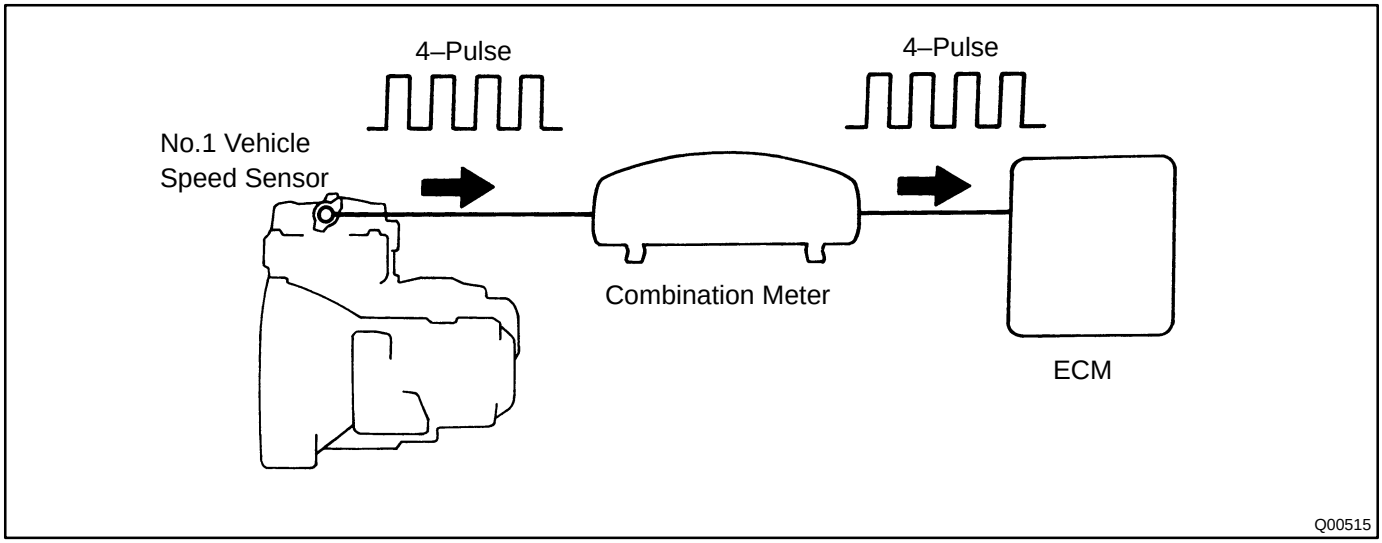

DTC No.	DTC Detection Condition	Trouble Area
P0500	The ECM detects following conditions simultaneously 500 times (2 trip detection logic): • No SP1 (speed sensor) signal while ECM detects SP2 (No. 2 speed sensor) signal • Vehicle speed is 6 mph (9 km/h) or more for 4 seconds • Park/Neutral position switch is OFF (Shift lever is in other than P and N positions) • Transfer is in other than N position	• Open or short in speed sensor circuit • Speed sensor • Combination meter • ECM • Stability control ECU

MONITOR DESCRIPTION

Equipped with ABS:

The ECM assumes that the vehicle is driven when the RPM of the transmission counter gear indicates more than 300 rpm and it has been over 30 seconds since the park/neutral position switch was turned OFF. If there is no signal from the vehicle speed sensor with these conditions satisfied, the ECM concludes that there is a fault in the vehicle speed sensor. The ECM will turn on the MIL and a DTC is set.

Not equipped with ABS:

The ECM assumes that the vehicle is driven when the park/neutral position switch is OFF and it has been over 4 seconds since the actual vehicle speed was 9 km/h or more.

If there is no signal from the vehicle speed sensor with these conditions satisfied, the ECM concludes that there is a fault in the vehicle speed sensor. The ECM will turn on the MIL and a DTC is set.

MONITOR STRATEGY

Related DTCs	P0500	Vehicle speed sensor ”A” pulse input error
Required sensors/components	Main sensors	Vehicle speed sensor
	Related sensors	Park/Neutral position switch, engine coolant temperature sensor, combination meter
Frequency of operation	Continuous	
Duration	w/ ABS: 2 seconds w/o ABS: 8 seconds	
MIL operation	2 driving cycles	
Sequence of operation	None	

TYPICAL ENABLING CONDITIONS

Item	Specification	
	Minimum	Maximum
The monitor will run whenever the following DTCs are not present	See ”List of Disable a Monitor” (On page 05–25)	
w/o ABS:		
Engine coolant temperature	70 °C	–
Engine speed	2,000 rpm	5,000 rpm
Intake air amount per engine revolution	0.42 g/rev	–
Fuel cut at high engine speed	Not executing	
w/ ABS:		
Either of following condition is met	(a) or (b)	
(a) Following conditions are met	1 and 2	
1. Engine coolant temperature	20°C	–
2. Time after park/neutralposition switch ON to OFF	10 seconds	–
(b) Following conditions are met	1 and 2	
1. Engine coolant temperature	–	20°C
2. Time after park/neutral position switch ON to OFF	30 seconds	–

Engine speed	2650 rpm (vary with throttle opening angle)	–
Detection time on intake air temperature	2 seconds (Intake air temperature is –10°C or more) 8 seconds (Intake air temperature less than –10°C)	–
Time after IG SW ON	3 seconds	–

TYPICAL MALFUNCTION THRESHOLDS

Detection Criteria	Threshold
Vehicle speed sensor signal	No pulse input

WIRING DIAGRAM

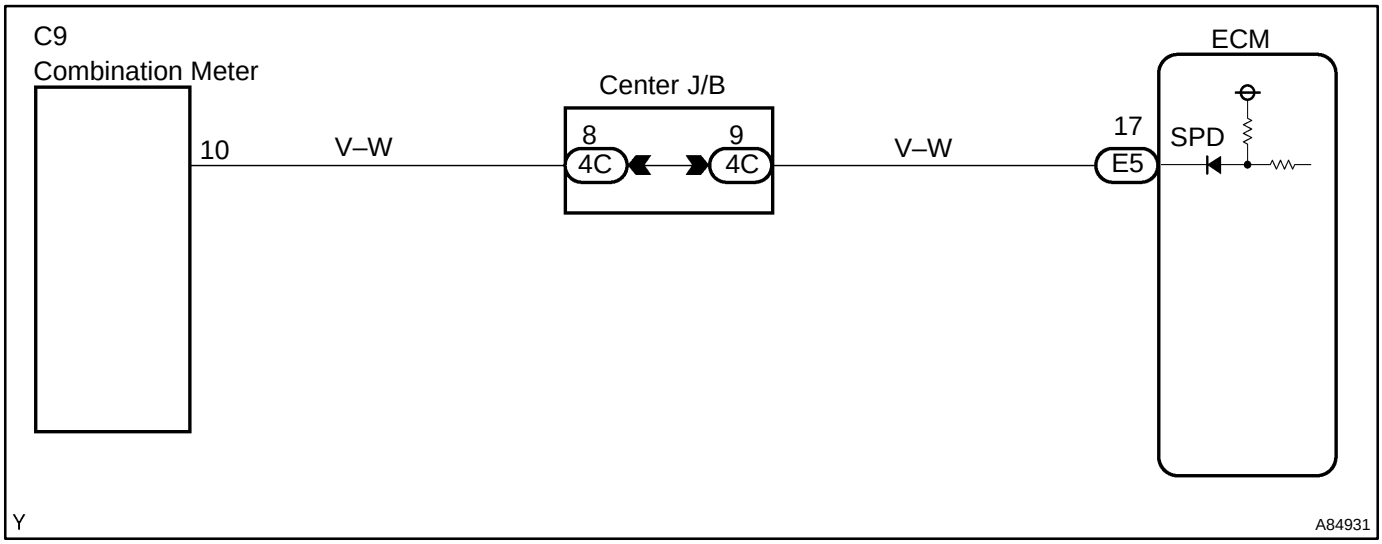

INSPECTION PROCEDURE

HINT:

Read freeze frame data using the hand–held tester or the OBD II scan tool. Freeze frame data records the engine conditions when a malfunction is detected. When troubleshooting, it is useful for determining whether the vehicle was running or stopped, the engine was warmed up or not, the air–fuel ratio was lean or rich, etc. at the time of the malfunction.

1	CHECK OPERATION OF SPEEDOMETER

(a) Drive the vehicle and check if the operation of the speedometer in the combination meter is normal.

HINT:

The vehicle speed sensor is operating normally if the speedometer display is normal.

NG → **CHECK SPEEDOMETER CIRCUIT (See page 05–640)**

OK

2 INSPECT ECM(SPD VOLTAGE)

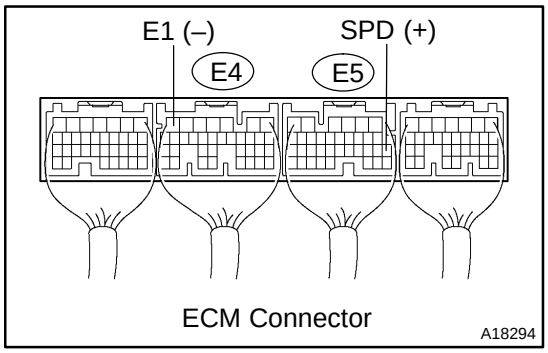

(a) Shift the lever to the neutral position.
(b) Jack up the vehicle.
(c) Turn the ignition switch ON.
(d) Check the voltage between the terminals of the E4 and E5 ECM connectors as the wheel is turned slowly.

Standard:

Tester Connection	Specified Condition
SPD (E5–17) – E1 (E4–7)	Voltage is generated intermittently

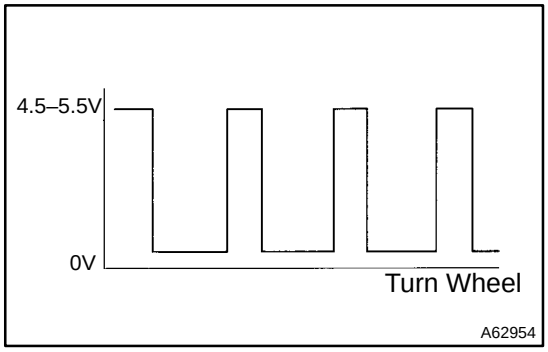

HINT:
The output voltage should fluctuate up and down similarly to the diagram on the left when the wheel is turned slowly.

NG → **REPAIR OR REPLACE HARNESS OR CONNECTOR**

OK

REPLACE ECM (See page 10–11)

DTC	P0505	IDLE AIR CONTROL SYSTEM

DTC	P0511	IDLE AIR CONTROL CIRCUIT

CIRCUIT DESCRIPTION

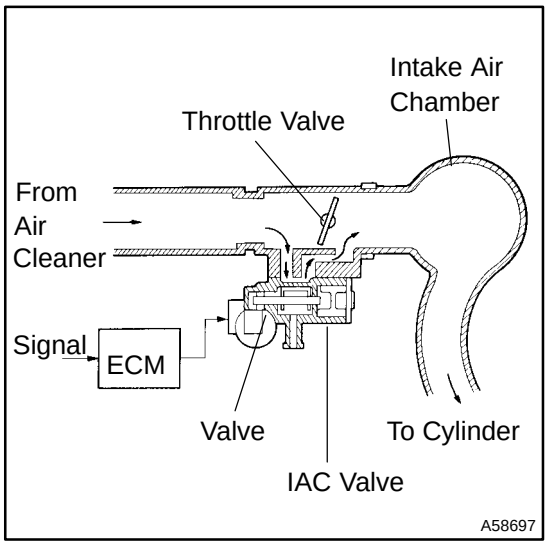

The rotary solenoid type idle air control (IAC) valve is located under the throttle body and intake air bypassing the throttle valve flows into the IAC valve through the passage.
In this way the intake air volume bypassing the throttle valve is regulated, controls the engine speed.
The ECM operates the IAC valve only to perform idle–up and provide feedback for the target idling speed.

DTC No.	DTC Detecting Condition	Trouble Area
P0505	Idle air continues to vary greatly from target speed (2 trip detection logic)	• Open or short in idle air control (IAC) valve circuit • Idle air control (IAC) valve is stuck or closed • A/C switch circuit • Air induction system • PCV valve and hose • ECM
P0511	Open or short ISC circuit	

MONITOR DESCRIPTION

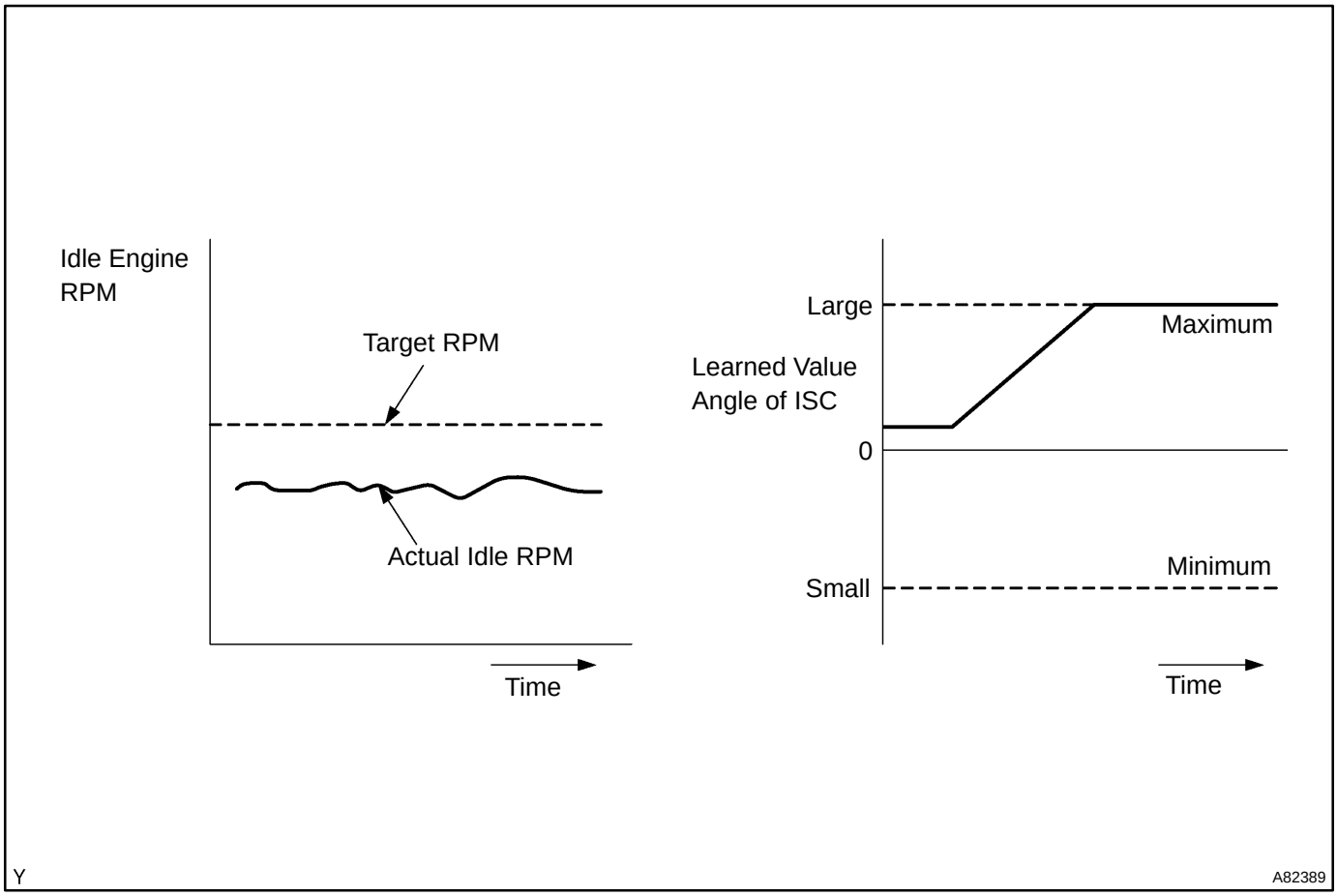

The idle speeds are determined depending on the volume of air that passes through the IAC valve. When the volume is large, the idle speed becomes higher. When the volume is small, the idle speed becomes lower. The IAC valve controls the air volume that bypasses the throttle valve. The engine control module (ECM) sends duty signals to the IAC valve and drives the IAC valve stepper motor to determine the air volume that bypasses the throttle valve.

Although the ECM regulates the idle engine RPM with the feedback control in several vehicle stopped, actual idle RPM does not reach the targeted RPM and a learned valve angle of the idle air control (IAC) remains at the maximum or remains at the minimum, the ECM determines to detect malfunction in the IAC system.

Example:

If the RPM difference between the targeted and actual idle engine RPMs exceeds 200 rpm (*1) with the vehicle stopped in an idle, and this occurs 5 times, or if the learned value angle of the IAC remains at its maximum or minimum angle for 5 seconds, P505 is detected.

P0511 is detected as an open/short circuit in the IAC if the rate of duty signal input to the IAC valve has stuck at 0 or 100 %.

*1: Threshold RPM is varied by an engine load.

MONITOR STRATEGY

Related DTCs	P0505	Idle air control valve
	P0511	Idle air control valve
Required sensors/components	Main sensors	Crankshaft position sensor
	Related sensors	Vehicle speed sensor, engine coolant temperature sensor
Frequency of operation	P0505 Functional check: once per driving cycle P0505 Range check, P0511: continuous	
Duration	P0505 Functional check: 10 minutes P0505 Range check, P0511: 10 seconds	
MIL operation	P0505 Functional check: 2 driving cycles P0505 Range check, P0511: Immediately	
Sequence of operation	None	

TYPICAL ENABLING CONDITION

Item	Specification	
	Minimum	Maximum
The monitor will run whenever the following DTCs are not present	See "List of Disable a Monitor" (On page 05–25)	
P0505 Functional check:		
Battery voltage	11 V	–
Engine coolant temperature	75°C (167°F)	–
Idle	ON (more than 6 seconds)	
Vehicle speed	–	1.8 mph (3 km/h)
Engine speed	400 rpm	–
P0505 Range check:		
Output signal duty	10 %	90 %
Battery voltage	10 V	–
P0511:		
Output signal duty	10 %	90 %
Battery voltage	10 V	–
Time after first missing of voltage change	10 sec	–

TYPICAL MALFUNCTION THRESHOLDS

Detection Criteria	Threshold
P0505 Functional check:	
Following conditions are met (At idle (after running with more than 6.2 mph (10 km/h) per trip)	Case1: A and B (5 times) Case2: B (5 seconds)
A. Either of the following conditions is met:	1 or 2
1. Deviation of engine speed (When shift position N or A/C ON)	Less than – 100 rpm or more than 200 rpm
2. Deviation of engine speed (When shift position D or A/C OFF)	Less than – 100 rpm or more than 150 rpm
B. Either of the following condition is met:	1 or 2
1. IAC flow rate learning value (A/C OFF)	0.5 L/sec or less or 2.75 L/sec or more
2. IAC flow rate learning value (A/C ON)	0.22 L/sec or less or 0.98 L/sec or more
P0505 Range check:	
Number of missing output voltage change	2,000 times or more
P0511:	
Number of missing output voltage change	1,000 times or more

COMPONENT OPERATING RANGE

Parameter	Standard value
P0505, P0511:	
Time while no missing voltage change	0.5 seconds or more

WIRING DIAGRAM

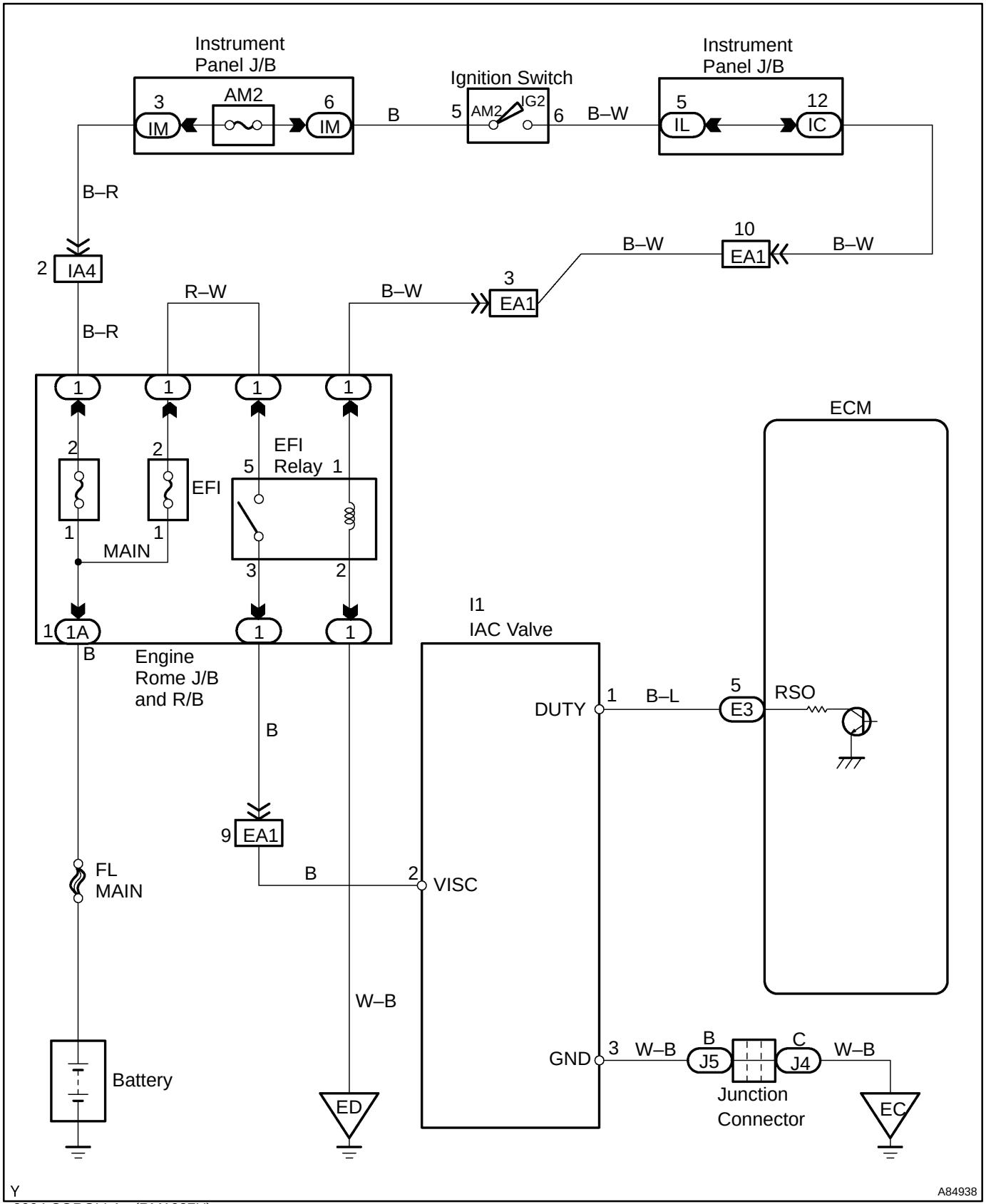

2004 COROLLA (RM1037U)

INSPECTION PROCEDURE

HINT:

- When the throttle position is slightly opened (the accelerator pedal is slightly depressed) because a floor carpet is overlapped on the accelerator pedal, or if not fully releasing the accelerator pedal, etc., DTC P505 will possibly be detected.
- Read freeze frame data using the hand−held tester or the OBD II scan tool. Freeze frame data records the engine conditions when a malfunction is detected. When troubleshooting, it is useful for determining whether the vehicle was running or stopped, the engine was warmed up or not, the air–fuel ratio was lean or rich, etc. at the time of the malfunction.

Hand–held tester:

1 CHECK OTHER DTC OUTPUT

(a) Connect the hand–held tester to the DLC3.
(b) Turn the ignition switch ON and push the hand–held tester main switch ON.
(c) Read the DTCs.

Result:

Display (DTC output)	Proceed to
P0505	A
P0511 and other DTCs	B

B → **Go to step 7**

A

2 CHECK CONNECTION OF PCV HOSE

NG → **REPAIR OR REPLACE PCV HOSE**

OK

3 CHECK AIR INDUCTION SYSTEM

NG → **REPAIR OR REPLACE**

OK

4	PERFORM ACTIVE TEST USING HAND–HELD TESTER(CHECK IAC VALVE OPERATION)

(a) Warm up the engine to the normal operating temperature.
(b) Switch off all the accessories.
(c) Switch off the A/C.
(d) Shift the lever into the neutral position.
(e) Connect the hand–held tester to the DLC3.
(f) Select the item ”DIAGNOSIS / ENHANCED OBD II / ACTIVE TEST / ISC DUTY RATIO”.
(g) Check that the engine RPM varies when changing the ISC duty ratio.
Engine RPM:
Engine RPM fluctuates up and down in response to the ISC duty ratio variation.

OK → **CHECK FOR INTERMITTENT PROBLEMS (See page 05–41)**

NG

5	CHECK A/C SIGNAL CIRCUIT

NG → **REPAIR OR REPLACE**

OK

6	CHECK BLOCKAGE OF IAC VALVE AND PASSAGE TO BYPASS THROTTLE VALVE

NG → **REPLACE IDLE AIR CONTROL VALVE**

OK

7	CHECK HARNESS AND CONNECTOR

Wire Harness Side:

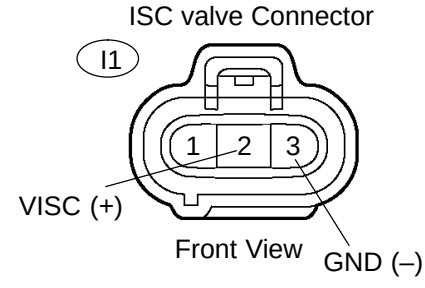

(a) Disconnect the I1 IAC valve connector.
(b) Turn the ignition switch ON.
(c) Measure the voltage between the terminals of the IAC valve wire harness side connector.
Standard:

Tester Connection	Specified Condition
VISC (I1–2) – GND (I1–3)	9 to 14 V

(d) Reconnect the IAC valve connector.

NG → **REPAIR OR REPLACE HARNESS OR CONNECTOR**

OK

8	CHECK HARNESS AND CONNECTOR(IAC VALVE – ECM)

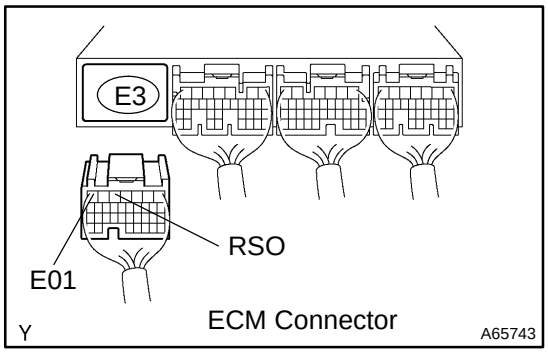

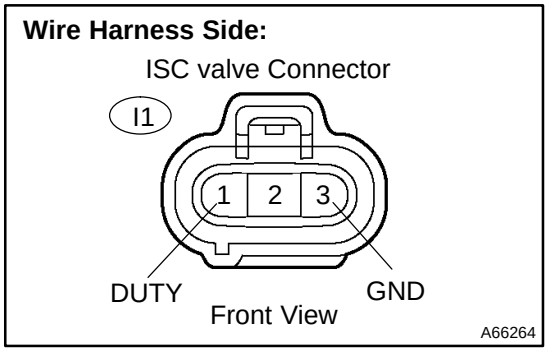

(a) Disconnect the I1 IAC valve connector.
(b) Disconnect the E3 ECM connector.
(c) Check the resistance between the wire harness side connectors.

Standard (Check for open):

Tester Connection	Specified Condition
DUTY (I1–1) – RSO (E3–5)	Below 1 Ω
GND (I1–3) – E01 (E3–7)	

Standard (Check for short):

Tester Connection	Specified Condition
DUTY (I1–1) or RSO (E3–5) – Body ground	10 kΩ or higher

(d) Reconnect the ECM connector.
(e) Reconnect the IAC valve connector.

NG → **REPAIR OR REPLACE HARNESS OR CONNECTOR**

OK

9	INSPECT IDLE AIR CONTROL VALVE (See page 10–1)

NG → **REPLACE IDLE AIR CONTROL VALVE**

OK

REPLACE ECM (See page 10–11)

OBD II scan tool (excluding hand–held tester):

1	CHECK OTHER DTC OUTPUT

(a) Connect the hand–held tester to the DLC3.

Result:

Display (DTC output)	Proceed to
P0505	A
”P0511” and other DTCs	B

B → **Go to step 6**

A

2	CHECK CONNECTION OF PCV HOSE

NG → REPAIR OR REPLACE PCV HOSE

OK

3	CHECK AIR INDUCTION SYSTEM

NG → REPAIR OR REPLACE

OK

4	CHECK A/C SIGNAL CIRCUIT

NG → REPAIR OR REPLACE

OK

5	CHECK BLOCKAGE OF IAC VALVE AND PASSAGE TO BYPASS THROTTLE VALVE

NG → REPAIR OR REPLACE IDLE AIR CONTROL VALVE

OK

6	CHECK HARNESS AND CONNECTOR

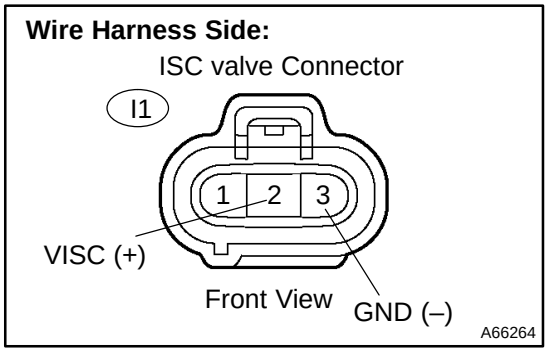

(a) Disconnect the I1 IAC valve connector.
(b) Turn the ignition switch ON.
(c) Measure the voltage between the terminals of the IAC valve wire harness side connector.

Standard:

Tester Connection	Specified Condition
VISC (I1–2) – GND (I1–3)	9 to 14 V

(d) Reconnect the IAC valve connector.

NG → REPAIR OR REPLACE HARNESS OR CONNECTOR

OK

7	CHECK HARNESS AND CONNECTOR(IAC VALVE – ECM)

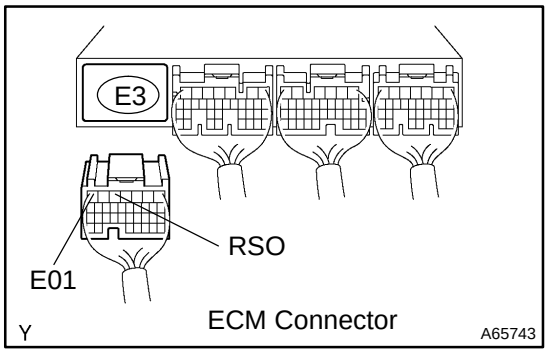

(a) Disconnect the I1 IAC valve connector.
(b) Disconnect the E3 ECM connector.
(c) Check the resistance between the wire harness side connectors.

Standard (Check for open):

Tester Connection	Specified Condition
DUTY (I1–1) – RSO (E3–5)	Below 1 Ω
GND (I1–3) – E01 (E3–7)	

Standard (Check for short):

Tester Connection	Specified Condition
DUTY (I1–1) or RSO (E3–5) – Body ground	10 kΩ or higher

(d) Reconnect the ECM connector.
(e) Reconnect the IAC valve connector.

Wire Harness Side:

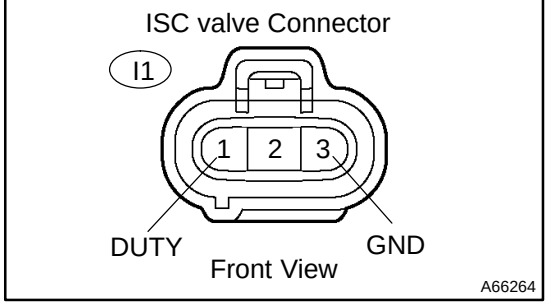

NG → **REPAIR OR REPLACE HARNESS OR CONNECTOR**

OK

8	INSPECT IDLE AIR CONTROL VALVE (See page 10–1)

NG → **REPAIR OR REPLACE IDLE AIR CONTROL VALVE**

OK

REPLACE ECM(See page 10–11)

DTC P0560 SYSTEM VOLTAGE

MONITOR DESCRIPTION

The battery supplies electricity to the ECM even when the ignition switch is OFF. This electricity allows the ECM store data such as DTC history, freeze frame data, fuel trim values, and other data. If the battery voltage falls below a minimum level, the ECM will conclude that there is a fault in the power supply circuit. At the next engine start, the ECM will turn on the MIL and a DTC will be set.

DTC No.	DTC Detection Condition	Trouble Area
P0560	Open in back–up power source circuit	• Open in back–up power source circuit • ECM

MONITOR STRATEGY

Related DTCs	P0560	System voltage malfunction
Required sensors/components	ECM	
Frequency of operation	Continuous	
Duration	3 seconds	
MIL operation	Immediately (*1)	
Sequence of operation	None	

*1: The DTC is set immediately. The MIL will be illuminated after the next engine start.

TYPICAL ENABLING CONDITIONS

Item	Specification	
	Minimum	Maximum
The monitor will run whenever the following DTCs are not present	See ”List of Disable a Monitor” (On page 05–25)	
Stand–by RAM	Initialized	

TYPICAL MALFUNCTION THRESHOLDS

Detection Criteria	Threshold
Battery voltage	Less than 3.5 V

WIRING DIAGRAM

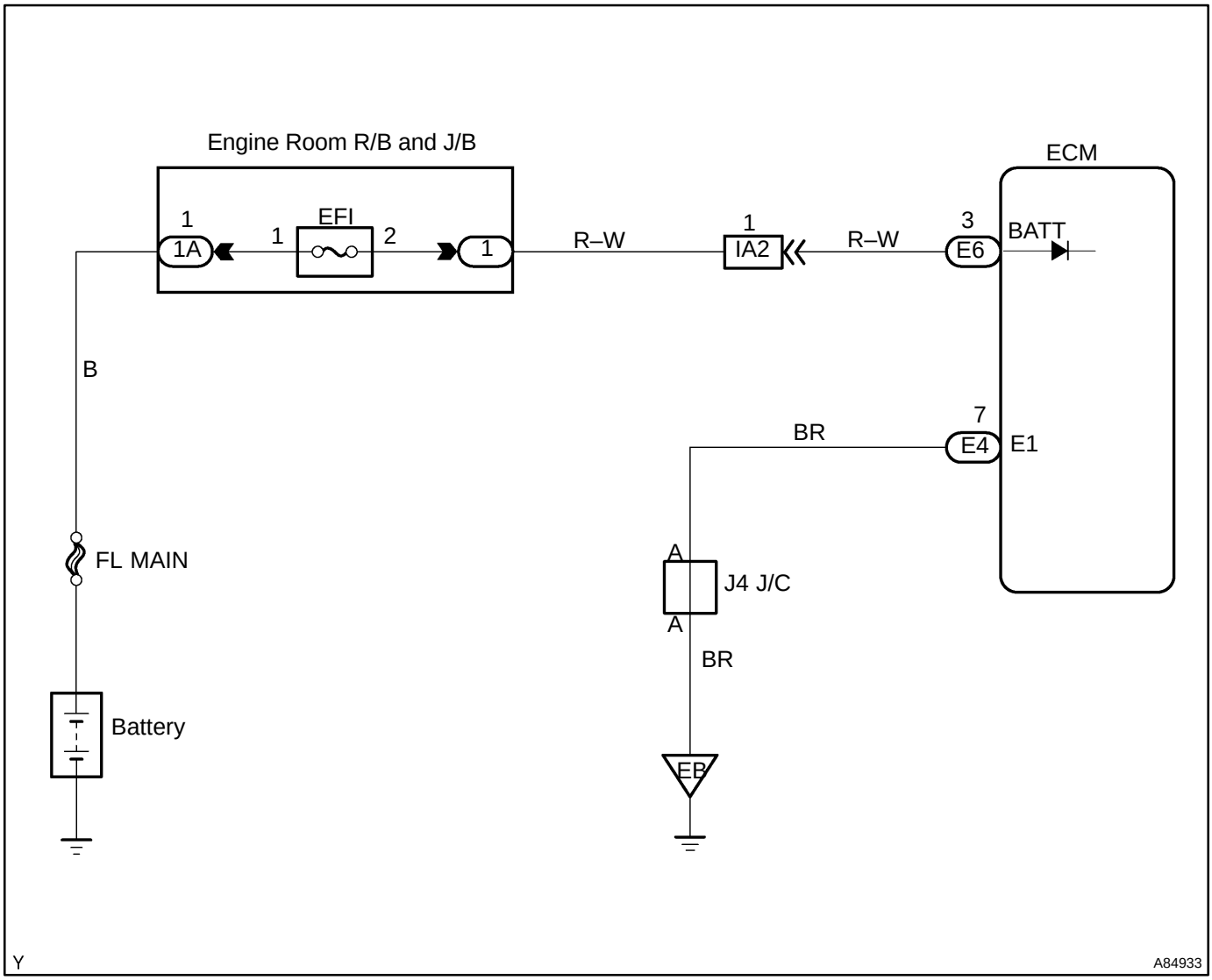

INSPECTION PROCEDURE

HINT:

Read freeze frame data using the hand–held tester or the OBD II scan tool. Freeze frame data records the engine conditions when a malfunction is detected. When troubleshooting, it is useful for determining whether the vehicle was running or stopped, the engine was warmed up or not, the air–fuel ratio was lean or rich, etc. at the time of the malfunction.

1 CHECK FUSE(EFI FUSE)

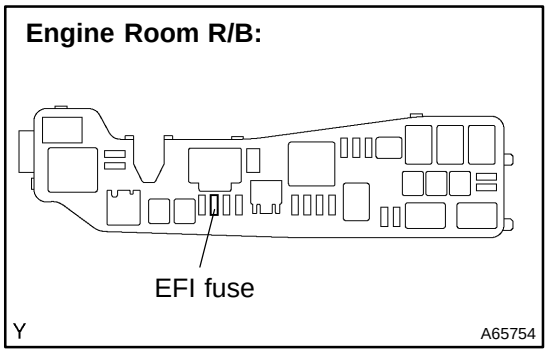

(a) Remove the EFI fuse from the engine room R/B.
(b) Check for continuity in the EFI fuse.
Standard: Continuity
(c) Reinstall the EFI fuse.

NG → **CHECK FOR SHORT IN ALL HARNESSES AND COMPONENTS CONNECTED FUSE**

OK

2 INSPECT ECM(BATT VOLTAGE)

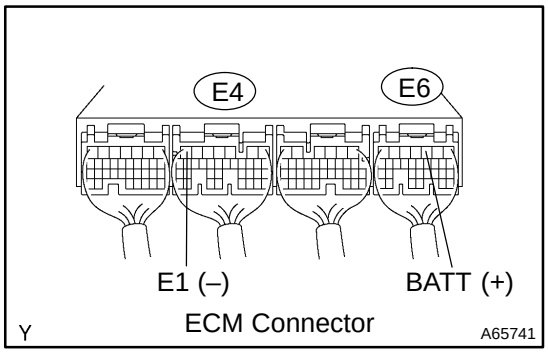

(a) Measure the voltage between the terminals of the E4 and E6 ECM connectors.
Standard:

Tester Connection	Specified Condition
BATT (E6–3) – E1 (E4–7)	8 to 14 V

OK → **REPLACE ECM (See page 10–11)**

NG

3 CHECK HARNESS AND CONNECTOR(ECM – EFI FUSE, EFI FUSE – BATTERY)

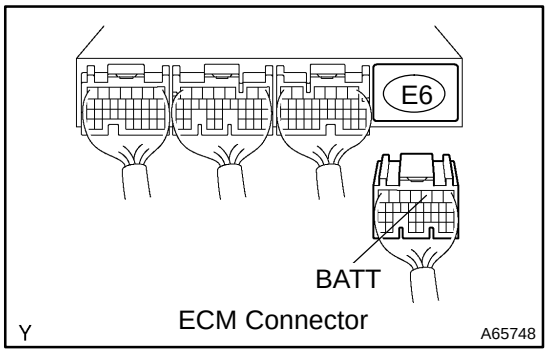

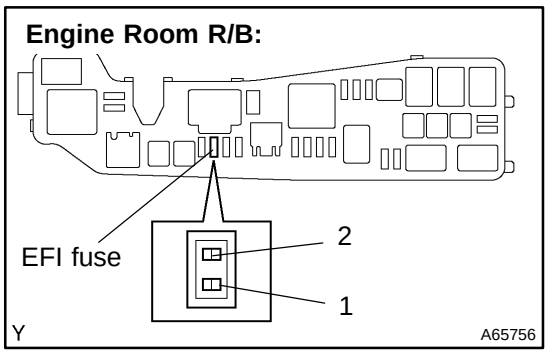

(a) Check the harness and the connector between the EFI fuse and ECM.
  (1) Remove the EFI fuse from the engine room R/B.
  (2) Disconnect the E6 ECM connector.
  (3) Check the resistance between the wire harness side connectors.

Standard (Check for open):

Tester Connection	Specified Condition
EFI fuse (2) – BATT (E6–3)	Below 1 Ω

Standard (Check for short):

Tester Connection	Specified Condition
EFI fuse (2) or BATT (E6–3) – Body ground	10 kΩ or higher

  (4) Reconnect the ECM connector.
  (5) Reinstall the EFI fuse.

(b) Check the harness and the connector between the EFI fuse and battery.
  (1) Remove the EFI fuse from the engine room R/B.
  (2) Disconnect the battery positive terminal.
  (3) Check the resistance between the wire harness side connectors.

Standard (Check for open):

Tester Connection	Specified Condition
Battery positive terminal – EFI fuse (1)	Below 1 Ω

Standard (Check for short):

Tester Connection	Specified Condition
Battery positive terminal or EFI fuse (1) – Body ground	10 kΩ or higher

  (4) Reconnect the battery positive terminal.
  (5) Reinstall the EFI fuse.

NG → **REPAIR OR REPLACE HARNESS OR CONNECTOR**

OK

CHECK AND REPLACE ENGINE ROOM RELAY BLOCK ASSY

DTC P0606 ECM/PCM PROCESSOR

MONITOR DESCRIPTION

The ECM continuously monitors its internal circuits. This self–check insures that the ECM is functioning properly. If a malfunction is detected, the ECM will set the appropriate DTC and illuminate the MIL.
The two CPUs, main and sub CPU inside the ECM, perform continuous mutual monitoring. If there is difference between outputs from the two CPUs that deviates from standard level ranges, the ECM concludes that there is a fault and sets a DTC.

DTC No.	DTC Detection Condition	Trouble Area
P0606	ECM internal error	• ECM

MONITOR STRATEGY

Related DTCs	P0606	ECM range check/description
Required sensors/components	ECM	
Frequency of operation	Continuous	
Duration	1 seconds	
MIL operation	Immediately	
Sequence of operation	None	

TYPICAL ENABLING CONDITIONS

Item	Specification	
	Minimum	Maximum
The monitor will run whenever the following DTCs are not present	See ”List of Disable a Monitor” (On page 05–25)	

TYPICAL MALFUNCTION THRESHOLDS

Detection Criteria	Threshold
ECM error	

INSPECTION PROCEDURE

HINT:
Read freeze frame data using the hand–held tester or the OBD II scan tool. Freeze frame data records the engine conditions when a malfunction is detected. When troubleshooting, it is useful for determining whether the vehicle was running or stopped, the engine was warmed up or not, the air–fuel ratio was lean or rich, etc. at the time of the malfunction.

REPLACE ECM (See Page 10–11)

DTC P0617 STARTER RELAY CIRCUIT HIGH

MONITOR DESCRIPTION

While the engine is being cranked, the battery positive voltage is applied to terminal STA of the ECM. If the ECM detects the starter control signal (STA) while the vehicle is driving, it will conclude that there is a fault in the starter control circuit. The ECM will turn on the MIL and a DTC is set.

DTC No.	DTC Detection Condition	Trouble Area
P0617	When all conditions (a), (b) and (c) are satisfied with battery (+B) voltage 10.5 V or more for 20 seconds (a) Vehicle speed greater than 12 mph (20 km/h) (b) Engine revolution greater than 1,000 rpm (c) STA signal ON	• Short in Park/Neutral position switch circuit (A/T) • Park/Neutral position switch (A/T) • Clutch start switch (M/T) • ECM

MONITOR STRATEGY

Related DTCs	P0617	Starter signal error
Required sensors/components	Main sensors	Starter signal
	Related sensors	Vehicle speed sensor, engine speed sensor
Frequency of operation	Continuous	
Duration	20 seconds	
MIL operation	Immediately	
Sequence of operation	None	

TYPICAL ENABLING CONDITIONS

Item	Specification	
	Minimum	Maximum
The monitor will run whenever the following DTCs are not present	See ”List of Disable a Monitor” (On page 05–25)	
Battery voltage	10.5 V	–
Vehicle speed	12.4 mph (20 km/h)	–
Engine speed	1,000 rpm	–

TYPICAL MALFUNCTION THRESHOLDS

Detection Criteria	Threshold
Starer signal	ON (at more than 12.4 mph (20 km/h) and more than 1,000 rpm)

WIRING DIAGRAM

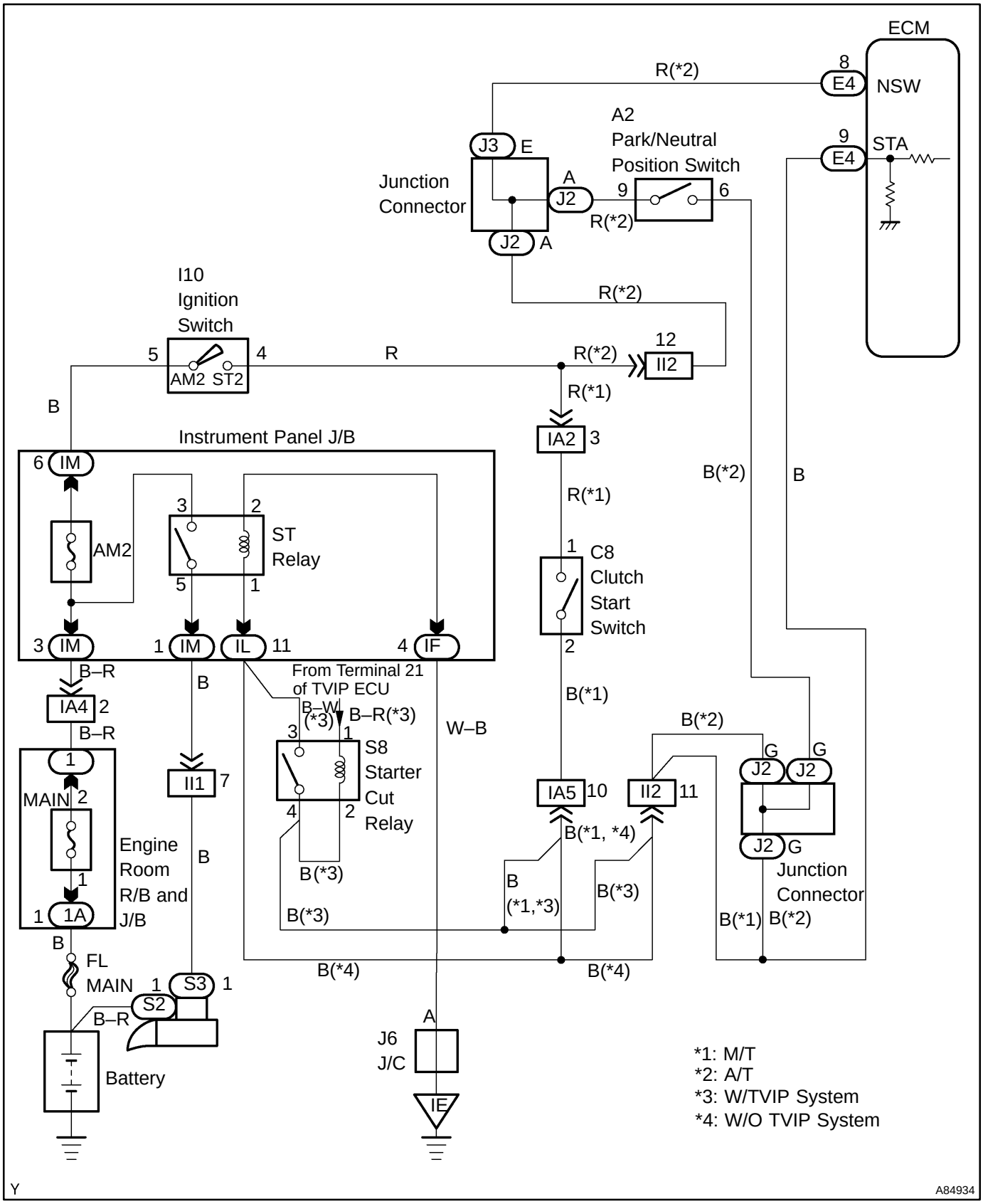

INSPECTION PROCEDURE

HINT:

- This DTC chart is on the premise that the engine is cranked normally. If the engine is not cranked, proceed to the problem symptoms table on page 05–42.
- Read freeze frame data using the hand–held tester or the OBD II scan tool. Freeze frame data records the engine conditions when a malfunction is detected. When troubleshooting, it is useful for determining whether the vehicle was running or stopped, the engine was warmed up or not, the air–fuel ratio was lean or rich, etc. at the time of the malfunction.

Hand–held tester:

1	READ VALUE OF HAND–HELD TESTER(STARTER SIGNAL)

(a) Connect the hand–held tester or OBD II scan tool to the DLC3.
(b) Turn the ignition switch ON and push the hand–held tester main switch ON.
(c) Select the item ”DIAGNOSIS / ENHANCED OBD II / DATA LIST / ALL / STARTER SIG” and read the value displayed the hand–held tester.

Result:

Ignition switch position	ON	START
STA Signal	OFF	ON

OK → **REPLACE ECM (See page 10–11)**

NG

2 INSPECT PARK/NEUTRAL POSITION SWITCH OR CLUTCH START SWITCH

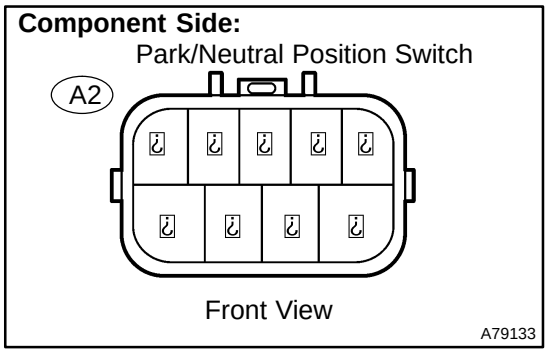

(a) Inspect the park/neutral position switch. (A/T)

(1) Disconnect the A2 park/neutral position switch connector.

(2) Check for continuity between each terminal shown below when the shift lever is moved to each range.

Standard:

Shift Range	Tester Connection	Specified Condition
P	1 – 3, 6 – 9	Continuity
R	2 – 3	
N	3 – 5, 6 – 9	
D	3 – 7	
2	3 – 4	
L	3 – 8	

(3) Reconnect the park/neutral position switch connector.

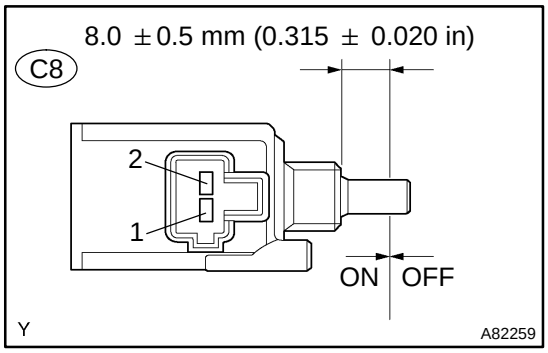

(b) Inspect the clutch start switch. (M/T)

(1) Disconnect the C8 clutch start switch connector.

(2) Check for continuity between terminals when the switch ON and OFF.

Standard:

Switch Position	Terminal	Specified Condition
ON (pushed)	1 – 2	Continuity
OFF (free)		No continuity

(3) Reconnect the clutch start switch connector.

NG → **REPLACE PARK/NEUTRAL POSITION SWITCH OR CLUTCH START SWITCH (GO TO NEXT STEP 3 AFTER THE REPLACEMENT)**

OK

3 READ VALUE OF HAND–HELD TESTER(STARTER SIGNAL)

(a) Connect the hand–held tester to or OBD II scan tool the DLC3.

(b) Turn the ignition switch ON and push the hand–held tester main switch ON.

(c) Select the item ”DIAGNOSIS / ENHANCED OBD II / DATA LIST / ALL / STARTER SIG” and read its value displayed the hand–held tester.

Result:

Ignition Switch Position	ON	START
STA Signal	OFF	ON

OK → **SYSTEM OK**

NG

4 INSPECT IGNITION OR STARTER SWITCH ASSY

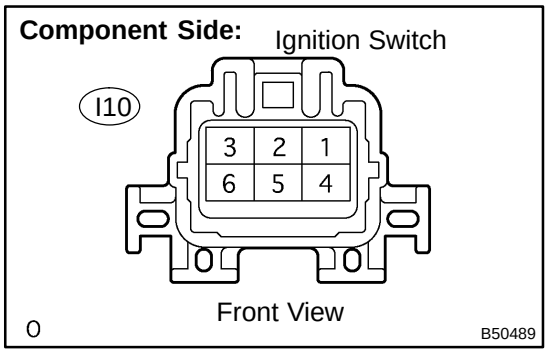

(a) Check for continuity between the connector terminals shown in the chart below.

Switch Position	Tester Connection	Specified Condition
LOCK	All Terminals	No continuity
ACC	1–3	Continuity
ON	1–2, 1–3, 2–3, 5–6	Continuity
START	1–2, 4–5, 4–6, 5–6	Continuity

NG → **REPLACE IGNITION OR STARTER SWITCH ASSY (GO TO NEXT STEP 5 AFTER THE REPLACEMENT**

OK

5 READ VALUE OF HAND–HELD TESTER(STARTER SIGNAL)

(a) Connect the hand–held tester or OBD II scan tool to the DLC3.
(b) Turn the ignition switch ON and push the hand–held tester main switch ON.
(c) Select the item ”DIAGNOSIS / ENHANCED OBD II / DATA LIST / ALL / STARTER SIG” and read its value displayed the hand–held tester.

Result:

Ignition Switch Position	ON	START
STA Signal	OFF	ON

OK → **SYSTEM OK**

NG

REPAIR OR REPLACE HARNESS AND CONNECTOR

OBD II scan tool (excluding hand–held tester):

1	INSPECT ECM

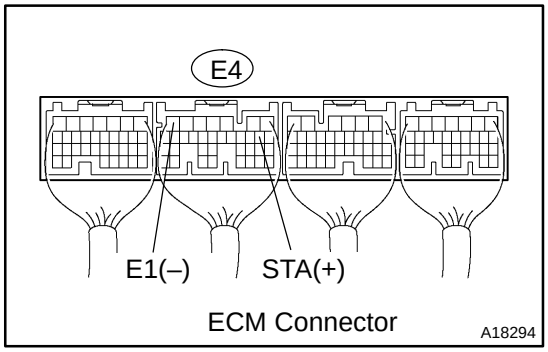

(a) Turn the ignition switch ON.

(b) Measure the voltage between the terminals of the E4 ECM connector.

Standard:

Tester Connection	Specified Condition
STA (E4–9) – E1 (E4–7)	0 V

(c) Measure the voltage between the terminals of the E4 ECM connector when the engine is cranked.

Standard:

Tester Connection	Specified Condition
STA (E4–9) – E1 (E4–7)	5.5 V or more

OK → **REPLACE ECM (See page 10–11)**

NG

2 INSPECT PARK/NEUTRAL POSITION SWITCH OR CLUTCH START SWITCH

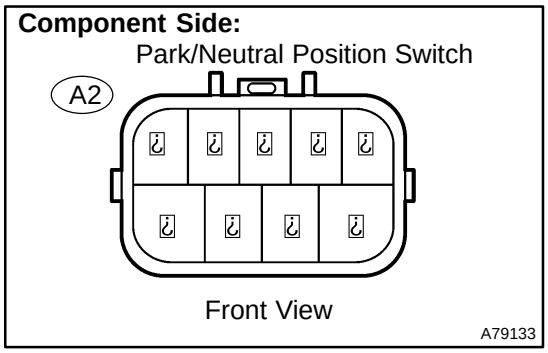

(a) Inspect the park/neutral position switch. (A/T)

(1) Disconnect the A2 park/neutral position switch connector.

(2) Check for continuity between each terminal shown below when the shift lever is moved to each range.

Standard:

Shift Range	Terminal No.	Specified Condition
P	1 – 3, 6 – 9	Continuity
R	2 – 3	
N	3 – 5, 6 – 9	
D	3 – 7	
2	3 – 4	
L	3 – 8	

(3) Reconnect the park/neutral position switch connector.

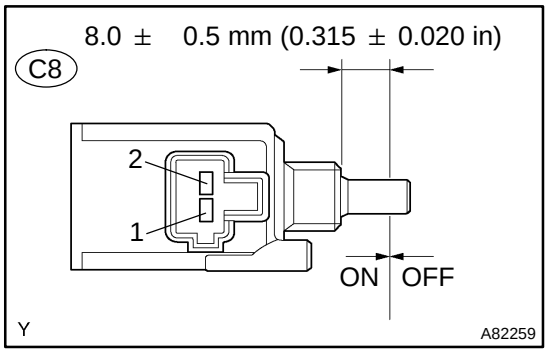

(b) Inspect the clutch start switch. (M/T)

(1) Disconnect the C8 clutch start switch connector.

(2) Check for continuity between terminals when the switch ON and OFF.

Standard:

Switch Position	Between Terminals	Specified Condition
ON (pushed)	1 – 2	Continuity
OFF (free)		No continuity

(3) Reconnect the clutch start switch connector.

NG → **REPLACE PARK/NEUTRAL POSITION SWITCH OR CLUTCH START SWITCH (GO TO NEXT STEP 3 AFTER THE REPLACEMENT)**

OK

3 INSPECT ECM

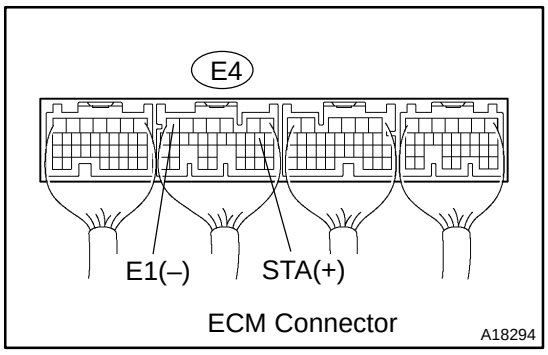

(a) Turn the ignition switch ON.

(b) Measure the voltage between the terminals of the E4 ECM connector.

Standard:

Tester Connection	Specified Condition
STA (E4–9) – E1 (E4–7)	0 V

(c) Measure the voltage between the terminals of the E4 ECM connector when the engine is cranked.

Standard:

Tester Connection	Specified Condition
STA (E4–9) – E1 (E4–7)	5.5 V or more

OK → **SYSTEM OK**

NG

4 INSPECT IGNITION OR STARTER SWITCH ASSY

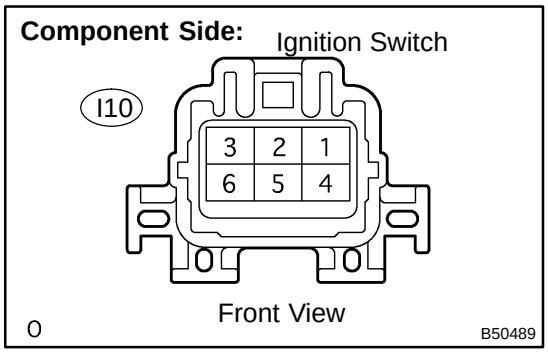

(a) Disconnect the I10 ignition switch connector.
(b) Check for continuity between the connector terminals shown in the chart below.

Switch Position	Terminal No.	Specified Condition
LOCK	All Terminals	No continuity
ACC	1–3	Continuity
ON	1–2, 1–3, 2–3, 5–6	Continuity
START	1–2, 4–5, 4–6, 5–6	Continuity

(c) Reconnect the ignition switch connector.

NG → **REPLACE IGNITION OR STARTER SWITCH ASSY (GO TO NEXT STEP 5 AFTER THE REPLACEMENT)**

OK

5 INSPECT ECM

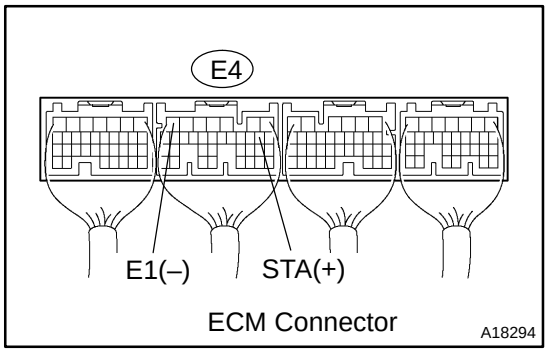

(a) Turn the ignition switch ON.
(b) Measure the voltage between the terminals of the E4 ECM connector.
Standard:

Tester Connection	Specified Condition
STA (E4–9) – E1 (E4–7)	0 V

(c) Measure the voltage between the terminals of the E4 ECM connector when the engine is cranked.
Standard:

Tester Connection	Specified Condition
STA (E4–9) – E1 (E4–7)	5.5 V or more

OK → **SYSTEM OK**

NG

REPAIR OR REPLACE HARNESS OR CONNECTOR

05DIH–01

READINESS MONITOR DRIVE PATTERN

1. PURPOSE OF THE READINESS TESTS

- The On–Board Diagnostic (OBD II) system is designed to monitor the performance of emission–related components and report any detected abnormalities in the form of Diagnostic Trouble Codes (DTCs). Since the various components need to be monitored during different driving conditions, the OBD II system is designed to ran separate monitoring programs called Readiness Monitors. Many state Inspection and Maintenance (I/M) programs require that vehicles complete their Readiness Monitors prior to beginning an emissions test.
- The current status of the Readiness Monitors can be seen by using the hand–held tester with version 9.0 software (or newer), or a generic OBD II scan tool.
- To view the Readiness Monitor status using the hand–held tester, select ”Monitor Status” from the Enhanced OBD II Menu.
- A status of ”complete” indicates that the necessary conditions have been met to run the performance tests for the related Readiness Monitor.
- The Readiness Monitor will be reset to ”incomplete” if:
  - ECM has lost power (battery or fuse).
  - DTCs have been cleared.
  - The conditions for running the Readiness Monitor have not been met.
- In the event that any Readiness Monitor shows ”incomplete,” follow the appropriate Readiness Monitor Drive Pattern to change the readiness status to ”complete.”

CAUTION:

Strict observance of posted speed limits, traffic laws, and road conditions are required when performing these drive patterns.

NOTICE:

These drive patterns represent the fastest method to satisfy all necessary conditions which allow the specific readiness monitor to complete.

In the event that the drive pattern must be interrupted (possibly due to traffic conditions or other factors) the drive pattern can be resumed, and in most cases, the readiness monitor will still set to complete.

To ensure rapid completion of readiness monitors, avoid sudden changes in vehicle load and speed (driving up and down hills and/or sudden acceleration).

2. CATALYST MONITOR (O2S TYPE)

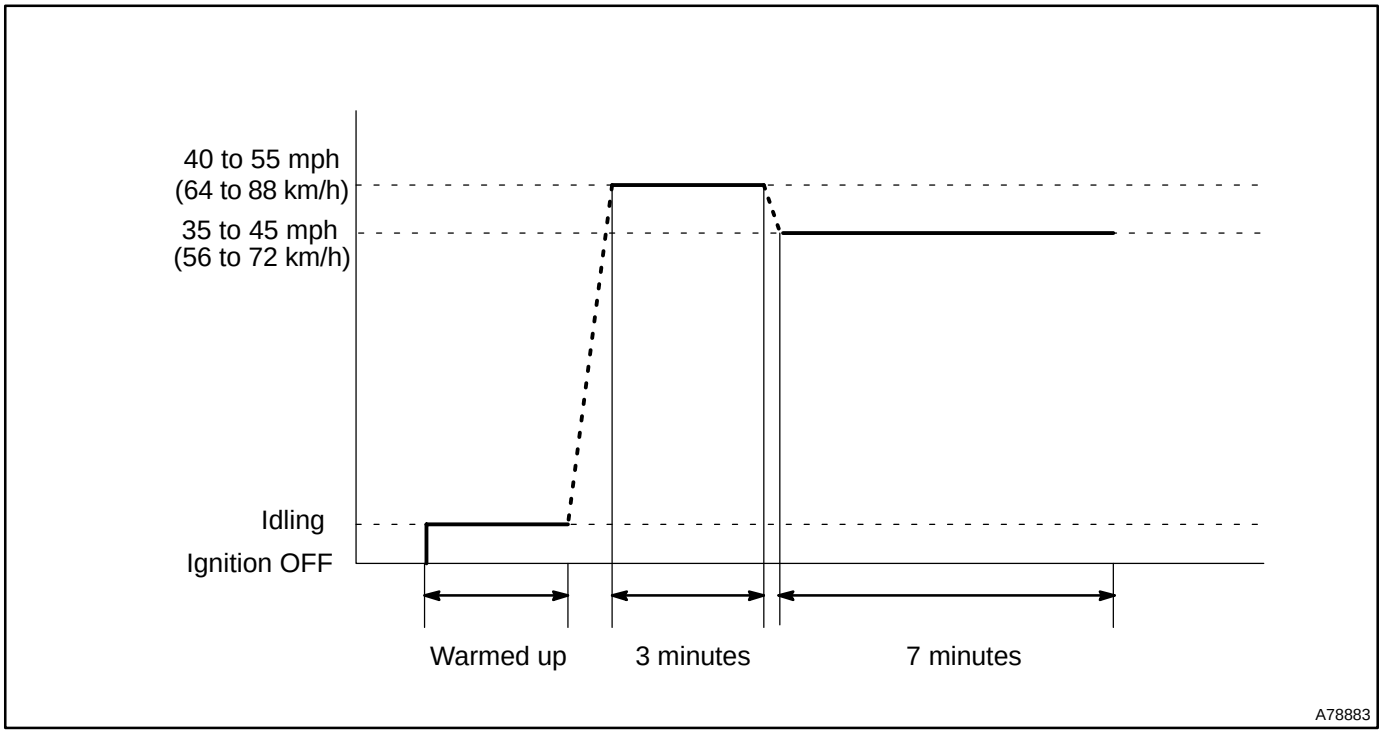

(a) Preconditions

The monitor will not run unless:

- MIL is OFF.
- Engine Coolant Temperature (ECT) is 176˚F (80˚C) or greater.
- Intake Air Temperature (IAT) is 14˚F (–10˚C) or greater.*

NOTICE:

*** 2002 and later MY vehicles:**

The readiness test can be completed in cold ambient conditions (less than 14˚F / –10˚C), if the drive pattern is repeated a second time after cycling the ignition off.

(b) Drive Pattern

(1) Connect the OBD II scan tool to the DLC3 to check monitor status and preconditions.

(2) Drive the vehicle at 40 to 55 mph (64 to 88 km/h) for approximately 3 minutes.

NOTICE:

Drive with smooth throttle operation and avoid sudden acceleration.

If IAT is less than 50˚F (10˚C) when starting engine, continue to drive vehicle at 40 to 55 mph (64 to 88km/h) for approximately 4 minutes.

(3) Drive the vehicle at 35 to 45 mph (56 to 72 km/h) for approximately 7 minutes.

NOTICE:

Drive with smooth throttle operation and avoid sudden deceleration as much as possible with the throttle fully closed.

(4) If readiness status dose not switch to complete, make sure that the preconditions are met and the ignition switch is turned OFF and then repeat steps (2) and (3).

(5) Release pressure in the fuel tank by removing and then reinstalling the fuel tank cap.

(6) Start the engine and immediately begin driving as directed.

3. EVAP MONITOR (VACUUM PRESSURE MONITOR)

NOTICE:

A cold soak must be performed prior to conducting the drive pattern to complete the Internal Pressure Readiness Monitor.

(a) Cold Soak Preconditions

The monitor will not run unless:

- MIL is OFF.
- Fuel level is approximately 1/2 to 3/4.
- Altitude is 7800 feet (2400 m) or less.

(b) Cold Soak Procedure

Let the vehicle cold soak for 8 hours or until the difference between IAT and ECT becomes less than 13˚F (7˚C).

HINT:

Examples:

- Scenario 1

  ECT = 75˚F (24˚C)

  IAT = 60˚F (16˚C)

  Difference between ECT and IAT is 15˚F (8˚C).

  → The monitor will not run because difference between ECT and IAT is greater than 13˚F (7˚C).

- Scenario 2

  ECT = 70˚F (21˚C)

  IAT = 68˚F (20˚C)

  Difference between ECT and IAT is 2˚F (1˚C).

  → The monitor will run because difference between ECT and IAT is less than 13˚F (7˚C).

4. EVAP MONITOR (VACUUM PRESSURE MONITOR) (CONTINUED)

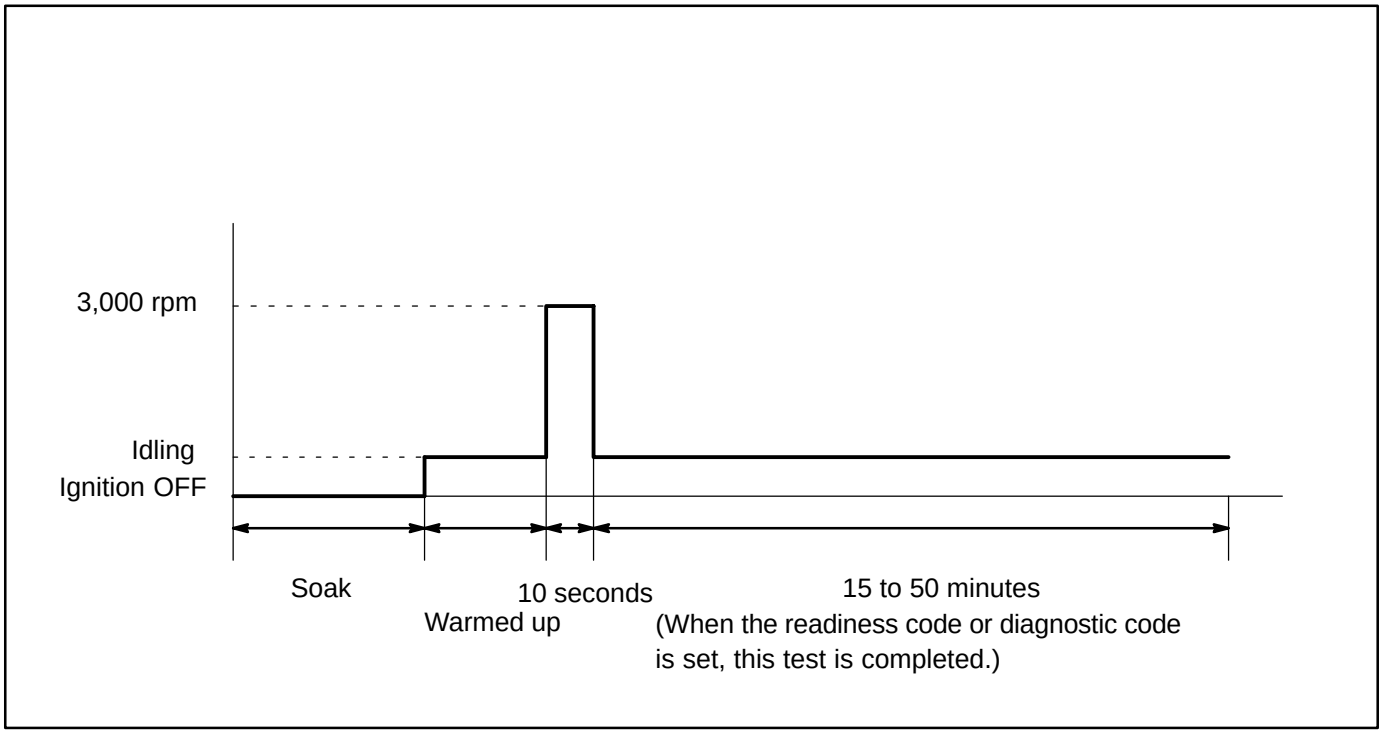

(a) Preconditions

The monitor will not run unless:

- MIL is OFF.
- Fuel level is approximately 1/2 to 3/4.
- Altitude is 7800 feet (2400 m) or less.*
- Engine Coolant Temperature (ECT) is between 40˚F and 95˚F (4.4˚C and 35˚C).
- Intake Air Temperature (IAT) is between 40˚F and 95 ˚F (4.4˚C and 35˚C).*
- Cold Soak Procedure has been completed.
- Before starting the engine, the difference between ECT and IAT must be less than 13˚F (7˚C).

HINT:

Examples:

- Scenario 1
  ECT = 75˚F (24˚C)
  IAT = 60˚F (16˚C)
  Difference between ECT and IAT is 15˚F (8˚C).
  → The monitor will not run because difference between ECT and IAT is greater than 13˚F (7˚C).
- Scenario 2
  ECT = 70˚F (21˚C)
  IAT = 68˚F (20˚C)
  Difference between ECT and IAT is 2˚F (1˚C).
  → The monitor will run because difference between ECT and IAT is less than 13˚F (7˚C).

NOTICE:

*** NOTE for 2002 and later MY vehicles:**

The readiness test can be completed in cold ambient conditions (less than 40˚F / 4.4˚C) and/or at high altitudes (more than 7800 feet / 2400 m) if the drive pattern is repeated a second time after cycling the ignition off.

(b) Drive Pattern
(1) Connect the OBD II scan tool to DLC3 to check monitor status and preconditions.
(2) Release pressure in the fuel tank by removing and then reinstalling the fuel tank cap.
(3) Start the engine and allow it to idle until ECT becomes 167˚F (75˚C) or greater.
(4) Run the engine at 3,000 rpm for about 10 seconds.
(5) Allow the engine to idle with the A/C ON (to create slight load) for 15 to 50 minutes.

NOTICE:

If the vehicle is not equipped with A/C put a slight load on the engine by doing the following :

- **Securely set the parking brake.**
- **Block the drive wheels with wheel chocks.**
- **Allow the vehicle to idle in drive for 15 to 50 minutes.**

5. OXYGEN SENSOR MONITOR (FRONT AND REAR O2S SYSTEM)

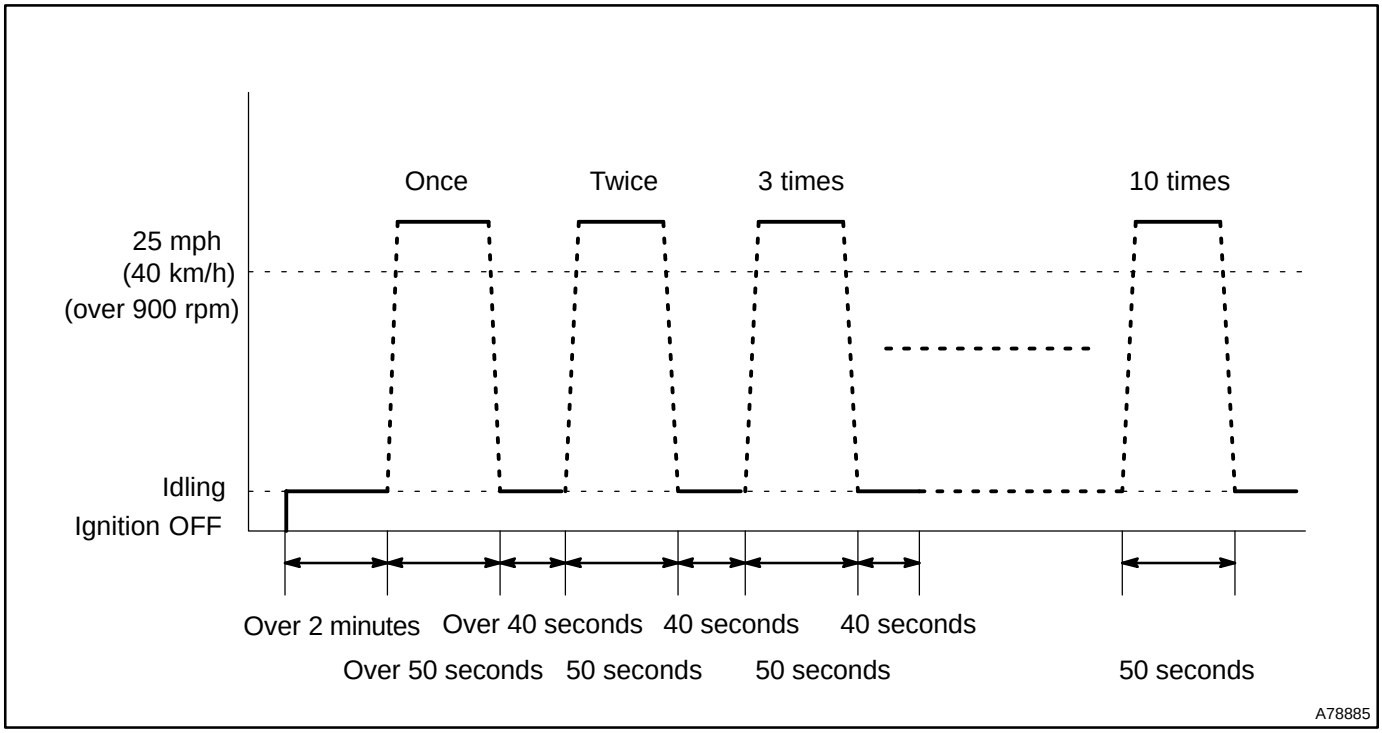

(a) Preconditions
The monitor will not run unless:
- MIL is OFF

(b) Drive Pattern
(1) Connect the OBD II scan tool to the DLC3 to check monitor status and preconditions.
(2) Start the engine and allow it to idle for 2 minutes or more.
(3) Drive the vehicle at 25 mph (40 km/h) or more for at least 50 seconds.
(4) Stop the vehicle and allow the engine to idle for 40 seconds or more.
(5) Perform steps (3) and (4) ten times.
(6) If the readiness status dose not switch to complete, make sure that the preconditions are met and the ignition switch is turned OFF and then repeat steps (1) through (5).

6. OXYGEN / AF SENSOR HEATER MONITOR

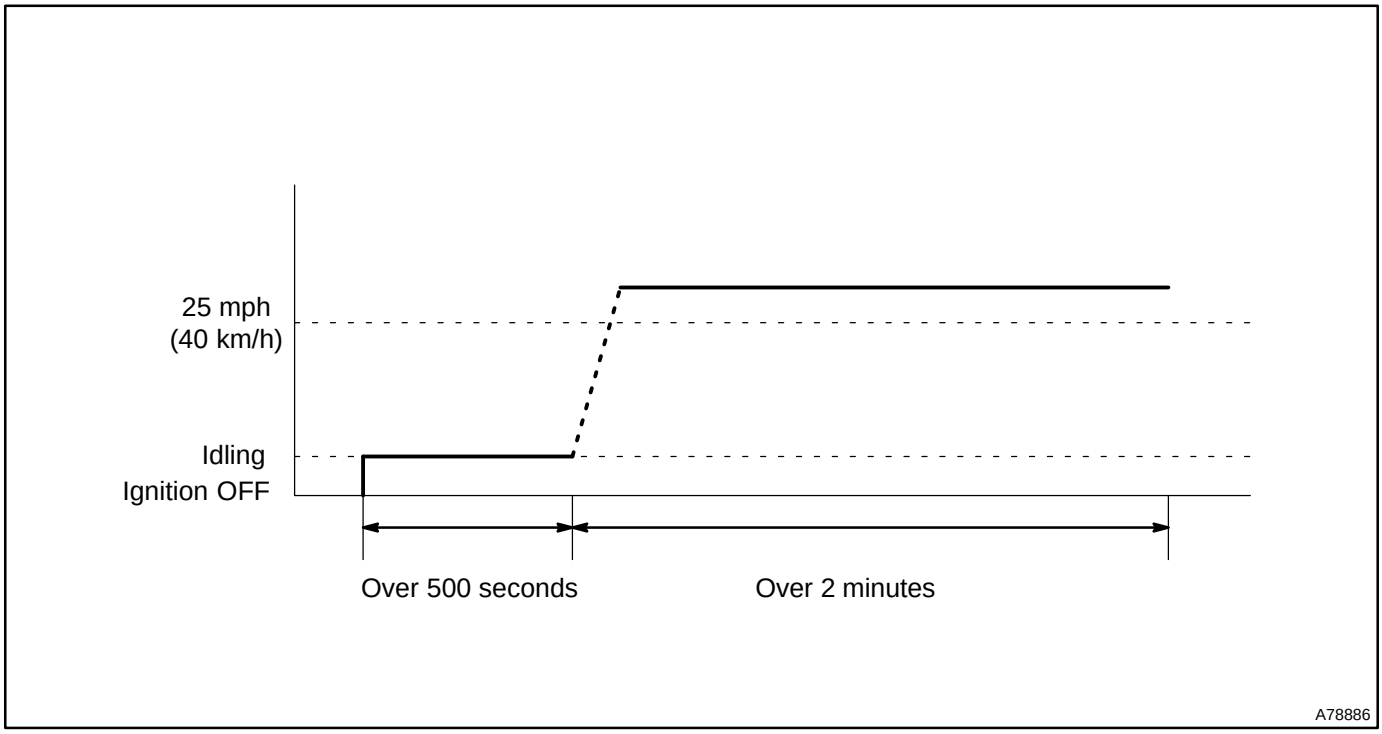

(a) Preconditions

The monitor will not run unless:

- MIL is OFF

(b) Drive Pattern

(1) Connect the OBD II scan tool to the DLC3 to check monitor status and preconditions.

(2) Start the engine and allow it to idle for 9 minutes.

(3) Drive the vehicle at 25 mph (40 km/h) or more for at least 2 minutes.

(4) If the readiness status dose not switch to complete, make sure that the preconditions are met and the ignition switch turned OFF and then repeat steps (2) and (3).

STOP LIGHT SWITCH CIRCUIT

CIRCUIT DESCRIPTION

This signal is used to detect that the brakes have been applied. The STP signal voltage is the same as the one supplied to the stop lights.
The STP signal is used mainly to control the fuel cut–off engine speed (The fuel cut–off engine speed is reduced slightly when the vehicle is braking.).

WIRING DIAGRAM

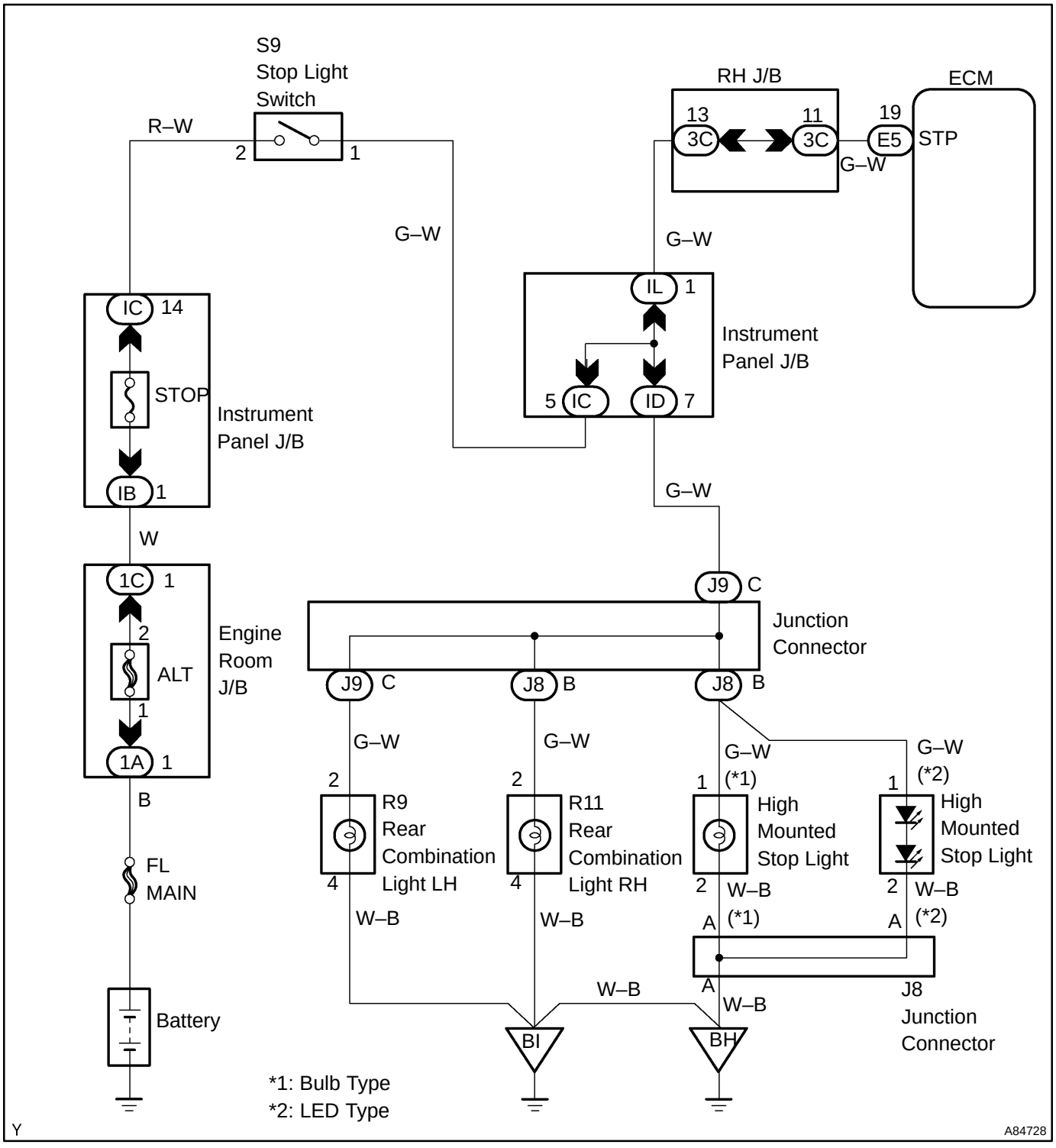

INSPECTION PROCEDURE

Hand–held tester:

1	CHECK OPERATION OF STOP LIGHT

(a) Check if the stop lights go on and off normally when the brake pedal is depressed and released.

NG → **REPAIR OR REPLACE STOP LIGHT SWITCH ASSY**

OK

2	INSPECT STOP LIGHT SWITCH ASSY

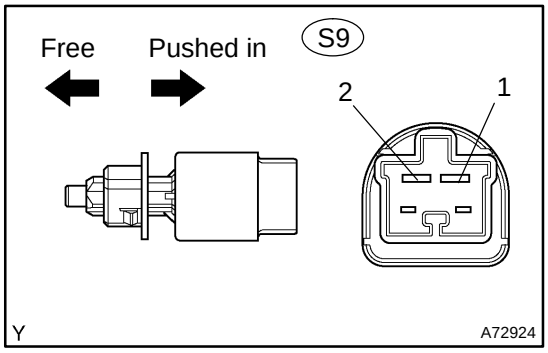

(a) Check the resistance between the terminals when the switch is turned ON and OFF.

Standard:

Switch Position	Tester Connection	Specified Condition
ON (free)	1 – 2	Below 1 Ω
OFF (pushed in)		10 kΩ or higher

NG → **REPLACE STOP LIGHT SWITCH ASSY**

OK

3	READ VALUE OF HAND–HELD TESTER(STP SIGNAL)

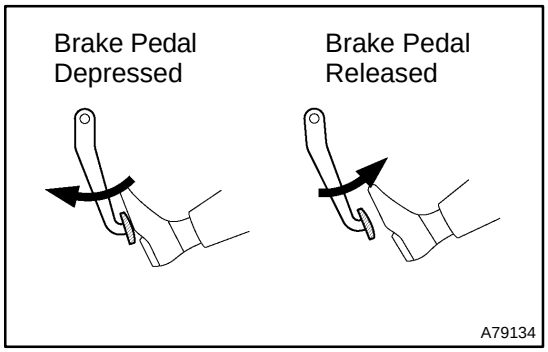

(a) Turn the ignition switch ON.
(b) Select the item ”DIAGNOSIS / ENHANCED OBD II / DATA LIST / ALL / STOP LIGHT SW” and read its value displayed on the hand–held tester.

Standard:

Brake Pedal	Specified Condition
Depressed	STP Signal ON
Released	STP Signal OFF

OK → **CHECK FOR INTERMITTENT PROBLEMS (See page 05–41)**

NG

4	CHECK HARNESS AND CONNECTOR(STOP LIGHT SWITCH – ECM)

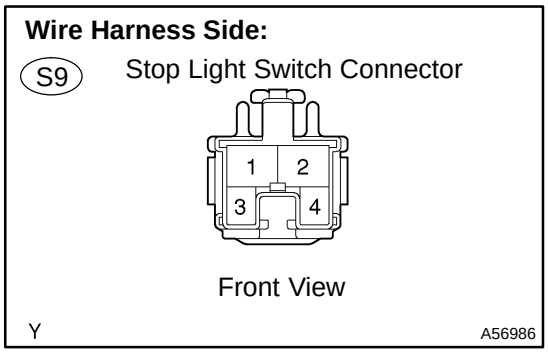

(a) Disconnect the S9 stop light switch connector.
(b) Disconnect the E5 ECM connector.
(c) Check the resistance between the wire harness side connectors.

Standard (Check for open):

Tester Connection	Specified Condition
Stop light switch (S9–1) – STP (E5–19)	Below 1 Ω

Standard (Check for short):

Tester Connection	Specified Condition
Stop light switch (S9–1) or STP (E5–19) – Body ground	10 kΩ or higher

(d) Reconnect the ECM connector.
(e) Reconnect the stop light switch connector.

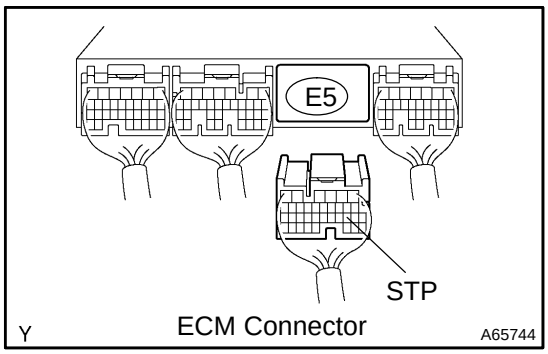

NG → **REPAIR OR REPLACE HARNESS OR CONNECTOR**

OK

REPLACE ECM (See page 10–11)

OBD II scan tool (excluding hand–held tester):

1	CHECK OPERATION OF STOP LIGHT

(a) Check if the stop lights go on and off normally when the brake pedal is depressed and released.

NG → **REPAIR OR REPLACE STOP LIGHT SWITCH CIRCUIT**

OK

2 INSPECT STOP LIGHT SWITCH ASSY

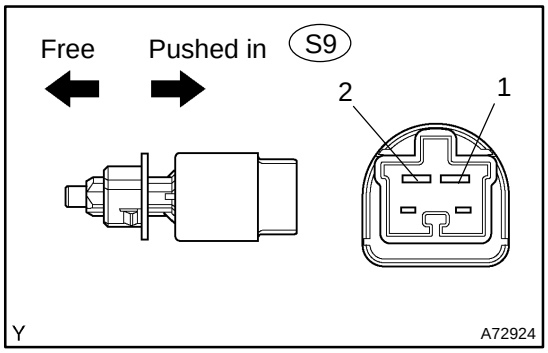

(a) Check the resistance between terminals when the switch ON and OFF.

Standard:

Switch Position	Tester Connection	Specified Condition
ON (free)	1 – 2	Below 1 Ω
OFF (pushed in)		10 kΩ or higher

NG → **REPLACE STOP LIGHT SWITCH ASSY**

OK

3 INSPECT ECM(STP VOLTAGE)

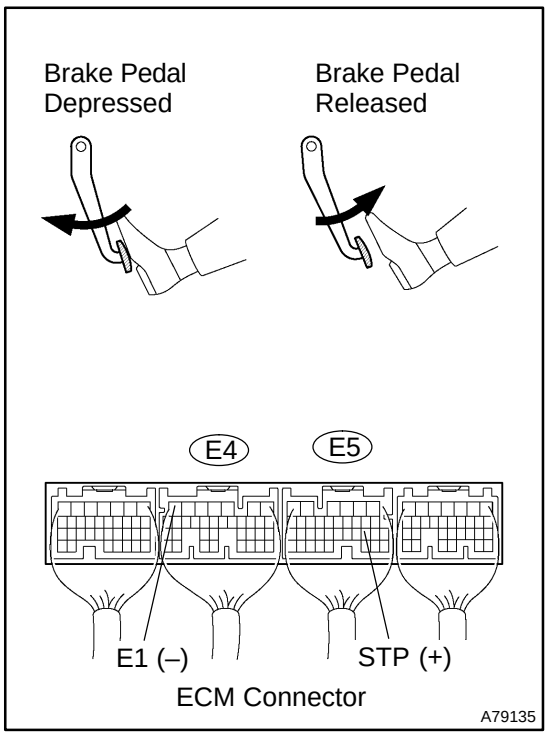

(a) Turn the ignition switch ON.

(b) Measure the voltage between the terminals of the E4 and E5 ECM connectors.

Standard:

Between Terminals	Brake Pedal position	Specified Condition
STP (E5–19) – E1 (E4–7)	Depressed	8 to 14 V
	Released	Below 1.5 V

OK → **CHECK FOR INTERMITTENT PROBLEMS (See page 05–41)**

NG

4 CHECK HARNESS AND CONNECTOR(STOP LIGHT SWITCH – ECM)

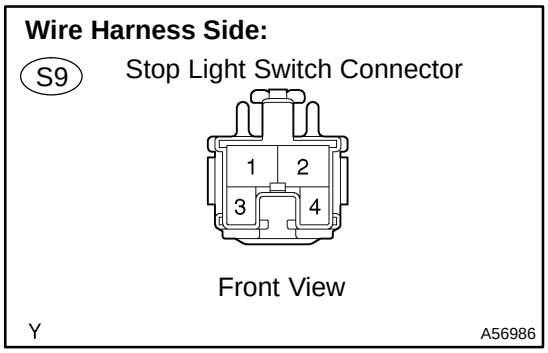

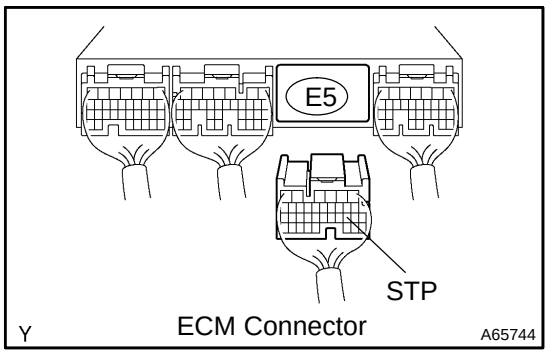

(a) Disconnect the S9 stop light switch connector.
(b) Disconnect the E5 ECM connector.
(c) Check the resistance between the wire harness side connectors.

Standard (Check for open):

Between Terminals	Specified Condition
Stop light switch (S9–1) – STP (E5–19)	Below 1 Ω

Standard (Check for short):

Between Terminals	Specified Condition
Stop light switch (S9–1) or STP (E5–19) – Body ground	10 kΩ or higher

(d) Reconnect the ECM connector.
(e) Reconnect the stop light switch connector.

NG → **REPAIR OR REPLACE HARNESS OR CONNECTOR**

OK

REPLACE ECM (See page 10–11)

05287–11

PROBLEM SYMPTOMS TABLE

When the malfunction code is not confirmed in the diagnostic trouble code check and the problem still can not be confirmed in the basic inspection, proceed to this problem symptoms tables and troubleshoot according to the numbered order given below.

Symptom	Suspect Area	See page
Engine does not crank (Does not start)	1. Starter and starter relay 2. Neutral start switch circuit *	19–1 40–6
No initial combustion (Does not start)	1. ECM power source circuit 2. Ignition coil (w/ Igniter) circuit 3. Fuel pump control circuit 4. Injector	05–273 05–177 05–278 05–149
No complete combustion (Does not start)	1. Fuel pump control circuit 2. Ignition coil (w/ Igniter) circuit 3. Injector	05–278 05–177 05–149
Engine cranks normally but difficult to start	1. Starter signal circuit 2. ISC valve circuit 3. Fuel pump control circuit 4. Ignition coil (w/ Igniter) 5. Spark plug 6. Compression 7. Injector	05–265 05–251 05–278 05–177 18–2 14–1 05–149
Difficult to start with cold engine	1. Starter signal circuit 2. ISC valve circuit 3. Fuel pump control circuit 4. Injector 5. Ignition coil (w/ Igniter) 6. Spark plug	05–265 05–251 05–278 05–149 05–177 18–2
Difficult to start with hot engine	1. Starter signal circuit 2. ISC valve circuit 3. Fuel pump control circuit 4. Injector 5. Ignition coil (w/ Igniter) 6. Spark plug	05–265 05–251 05–278 05–149 05–177 18–2
Incorrect first idle (Poor idling)	1. ISC valve circuit	05–251
High engine idle speed (Poor idling)	1. ISC valve circuit 2. ECM power source circuit 3. Neutral start switch circuit *	05–251 05–273 40–6
Low engine idle speed (Poor idling)	1. ISC valve circuit 2. Neutral start switch circuit * 3. Fuel pump control circuit 4. Injector	05–251 40–6 05–278 05–149
Rough idling (Poor idling)	1. ISC valve circuit 2. Injector 3. Ignition coil (w/ Igniter) circuit 4. Compression 5. Fuel pump control circuit	05–251 05–149 05–177 14–1 05–278
Hunting (Poor idling)	1. ISC valve circuit 2. ECM power source circuit 3. Fuel pump control circuit	05–251 05–273 05–278
Hesitation/Poor acceleration (Poor drivability)	1. Injector 2. Fuel pump control circuit 3. Ignition coil (w/ Igniter) circuit 4. A/T faulty *	05–149 05–278 05–177 05–374
Muffler explosion, after fire (Poor drivability)	1. Ignition coil (w/ Igniter) 2. Spark plug 3. Injector	05–177 18–2 05–149

Surging (Poor drivability)	1. Fuel pump control circuit 2. Spark plug 3. Injector	05–278 18–2 05–149
Engine stall (Soon after starting)	1. Fuel pump control circuit 2. ISC valve circuit	05–278 05–251
Engine stall (After accelerator pedal released)	1. Injector 2. ISC valve circuit 3. ECM	05–149 05–251 01–30
Engine stall (When shifting N to D)	1. Neutral start switch circuit* 2. ISC valve circuit	40–6 05–251

*: A/T only

05286–12

TERMINALS OF ECM

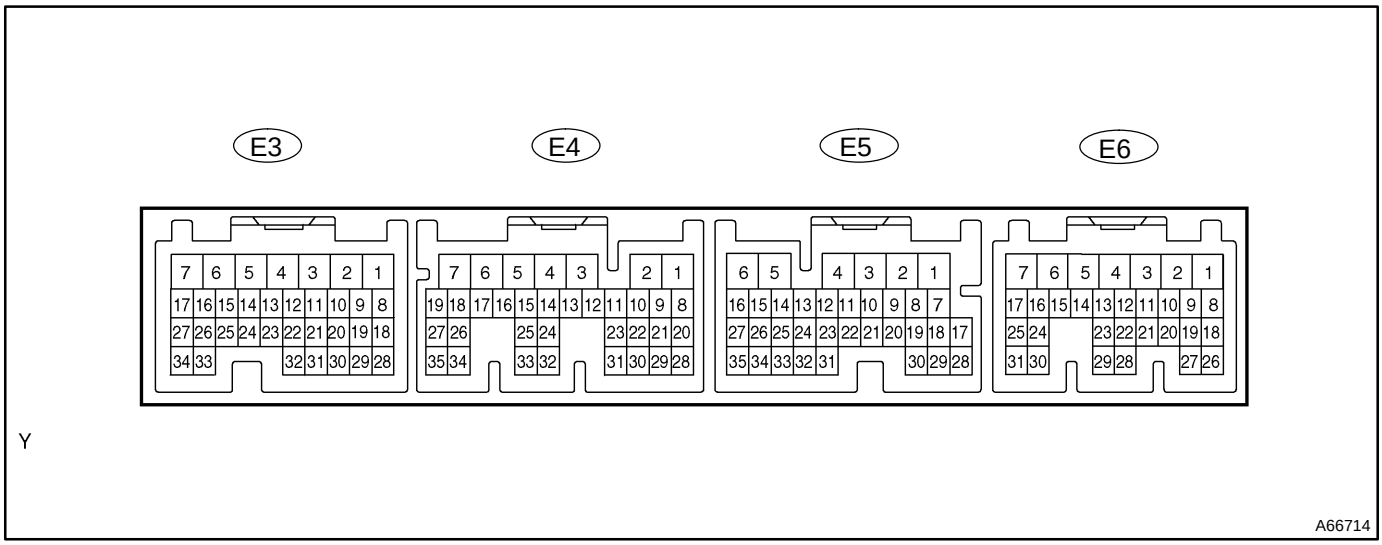

Symbols (Terminals No.)	Wiring Color	Terminal Description	Condition	STD Voltage (V)
BATT (E6 – 3) – E1 (E4 – 7)	R–W – BR	Battery (for measuring the battery voltage and for the ECM memory)	Always	8 to 14
FC (E6 – 10) – E1 (E4 – 7)	G–R – BR	Fuel pump control	IG switch ON	8 to 14
			Idling	Below 1.5
W (E6 – 11) – E1 (E4 – 7)	R–Y – BR	MIL	Idling	8 to 14
			IG switch ON	Below 3.5
+B (E6 – 1) – E1 (E4 – 7)	B – BR	Power source of ECM	IG switch ON	8 to 14
STP (E5 – 19) *1 – E1 (E4 – 7)	G–W – BR	Stop light switch	IG switch ON, Brake pedal de-pressed	8 to 14
			IG switch ON, Brake pedal released	Below 1.5
F/PS (E6 – 14) – E1 (E4 – 7)	Y – BR	Airbag sensor	IG switch ON	Pulse generation
STA (E4 – 9) – E1 (E4 – 7)	B – BR	Starter signal	Cranking	5.5 or more
PSW (E4 – 29) – E1 (E4 – 7)	L–R – BR	Power steering oil pressure sensor	IG switch ON	8 to 14
SPD (E5 – 17) – E1 (E4 – 7)	V–W – BR	Speed signal from combination meter	IG switch ON, rotate driving wheel slowly	Pulse generation
TACH (E6 – 5) – E1 (E4 – 7)	B – BR	Engine speed	Idling	Pulse generation
VC (E3 – 18) – E2 (E3 – 28)	Y – BR	Power source of sensor (a specific voltage)	IG switch ON	4.5 to 5.5
EVP (E3 – 12) – E01 (E3 – 7)	L–B – W–B	VSV for EVAP	IG switch ON	8 to 14
CCV (E5 – 1) – E01 (E3 – 7)	L – W–B	VSV for CCV	IG switch ON	9 to 14
TBP (E6 – 4) – E01 (E3 – 7)	R – W–B	VSV for Vapor pressure sensor	IG switch ON	9 to 14
PTNK (E6 – 21) – E2 (E3 – 28)	L – BR	Vapor pressure sensor	Ignition switch ON	2.9 to 3.7
			Apply vacuum 4.0 kPa (30 mmHG, 1.18 in.Hg)	Below 0.5
VG (E4 – 24) – EVG (E4 – 32)	G – L–W	Mass air flow sensor	Idling, A/C switch OFF	1.1 to 1.5
OX1A (E4 – 23) – E1 (E4 – 7)	B – BR	Heated oxygen sensor (Sensor 1)	Maintain engine speed at 2,500 rpm for 2 min. after warning up	Pulse generation (See Page 05–96)
HT1A (E4 – 4) – E03 (E4 – 5)	P – W–B	Heated oxygen sensor heater (Sensor 1)	Idling	Below 3.0
			IG switch ON	9 to 14
OX1B (E4 – 21) – E1 (E4 – 7)	W – BR	Heated oxygen sensor (Sensor 2)	Maintain engine speed at 2,500 rpm for 2 min. after warning up	Pulse generation (See Page 05–96)
HT1B (E5 – 4) – E03 (E4 – 5)	P–B – W–B	Heated oxygen sensor heater (Sensor 2)	Idling	Below 3.0
			IG switch ON	9 to 14

Symbols (Terminals No.)	Wiring Color	Terminal Description	Condition	STD Voltage (V)
THW (E3 – 19) – E2 (E3 – 28)	W – BR	Engine coolant temperature sensor	Idling, Engine coolant temp. at 80˚C (176˚F)	0.2 to 1.0
G22+ (E3 – 26) – NE– (E3 – 34)	B – W	Camshaft position sensor	Idling	Pulse generation (See Page 05–168)
NE+ (E3 – 27) – NE– (E3 – 34)	B – W	Crankshaft position sensor	Idling	Pulse generation See Page 05–168)
THA (E3 – 20) – E2 (E3 – 28)	Y–B – BR	Intake air temperature sensor	Idling, intake air temp. at 20˚C (68˚F)	0.5 to 3.4
VTA (E3 – 21) – E2 (E3 – 28)	LG – BR	Throttle position sensor	IG switch ON, throttle valve fully closed	0.3 to 1.0
			IG switch ON, throttle valve fully open	3.2 to 4.9
#10 (E3 – 1) – E01 (E3 – 7)	Y – W–B	Injector	IG switch ON	8 to 14
#20 (E3 – 2) – E01 (E3 – 7)	B – W–B			
#30 (E3 – 3) – E01 (E3 – 7)	W – W–B			
#40 (E3 – 4) – E01 (E3 – 7)	L – W–B			
IGT1 (E3 – 8) – E1 (E4 – 7)	R–L – BR	Ignition coil and igniter (ignition signal)	Idling	Pulse generation (See Page 05–177)
IGT2 (E3 – 9) – E1 (E4 – 7)	Y–G – BR			
IGT3 (E3 – 10) – E1 (E4 – 7)	GR – BR			
IGT4 (E3 – 11) – E1 (E4 – 7)	W – BR			
IGF (E3 – 23) – E1 (E4 – 7)	L–Y – BR	Ignition coil and igniter (ignition confirmation signal)	IG switch ON	4.5 to 5.5
			Idling	Pulse generation (See Page 05–177)
RSO (E3 – 5) – E01 (E3 – 7)	B–L – W–B	Idle air control valve	IG switch ON	9 to 14
OCV+ (E3 – 15) – OCV– (E3 – 14)	Y – B–Y	Camshaft timing oil control valve	IG switch ON	Pulse generation (See Page 05–44)
KNK1 (E4 – 1) – EKNK (E4 – 2)	B – W	Knock sensor	Idling	Pulse generation (See Page 05–163)
TC (E6 – 20) – E1 (E4 – 7)	P–B – BR	Terminal TC of DLC 3	IG switch ON	9 to 14
SIL (E6 – 18) – E1 (E4 – 7)	L–R – BR	Terminal SIL of DLC3	Connect hand–held tester to DLC3	Pulse generation

*1: A/T only

DTC B1100/31 AIRBAG SENSOR ASSY MALFUNCTION

CIRCUIT DESCRIPTION

The airbag sensor assy center consists of a airbag sensor assy center, safing sensor, drive circuit, diagnosis circuit and ignition control, etc.
It receives signals from the airbag sensor, judges whether or not the SRS must be activated, and detects diagnosis system malfunction.
DTC B1100/31 is recorded when occurrence of a malfunction in the airbag sensor assy center is detected.

DTC No.	DTC Detecting Condition	Trouble Area
B1100/31	• Airbag sensor assy center malfunction	• Airbag sensor assy center

INSPECTION PROCEDURE

HINT:
When a malfunction code other than code B1100/31 is displayed at the same time, first repair the malfunction indicated by the malfunction code other than code B1100/31.

INSPECTION PROCEDURE

1	CHECK VOLTAGE AT IG2 OF AIRBAG SENSOR ASSY CENTER

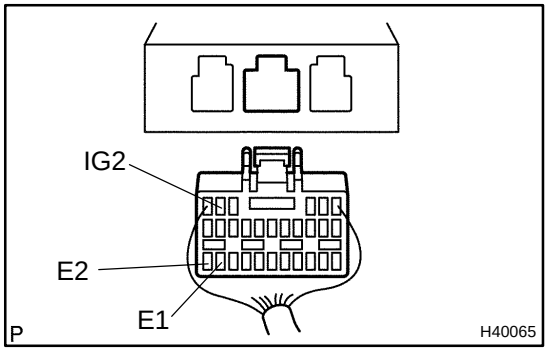

(a) Disconnect the negative (–) terminal cable from the battery, and wait at least for 90 seconds.
(b) Disconnect the connector of the airbag sensor assy center.
(c) Connect the negative (–) terminal cable to the battery, and wait at least for 2 seconds.
(d) Turn the ignition switch to ON.
(e) Measure the voltage between E1 (E2) and IG2 of the airbag sensor assy center connector.
OK:
Voltage: 10 – 14 V

NG → **CHECK CHECK THAT AN ABNORMALITY OCCURS ON THE BATTERY AND CHARGING SYSTEM**

OK

2	CHECK AIR BAG SENSOR ASSY CENTER

SST 09843–18040

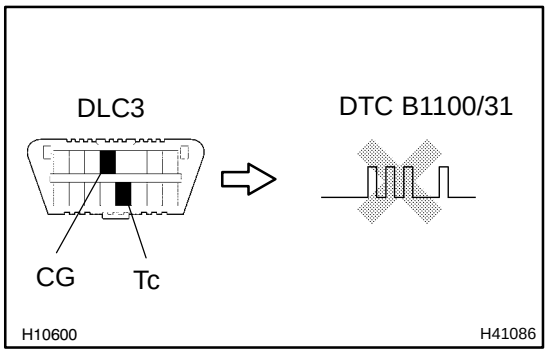

(a) Turn the ignition switch to LOCK.
(b) Disconnect the negative (–) terminal cable from the battery, and wait at least for 90 seconds.
(c) Connect the connectors of all the SRS components.
(d) Connect the negative (–) terminal cable to the battery, and wait at least for 2 seconds.
(e) Turn the ignition switch to ON, and wait at least for 20 seconds.
(f) Clear the DTC stored in memory (See page 05–424).
(g) Turn the ignition switch to LOCK, and wait at least for 20 seconds.
(h) Turn the ignition switch to ON, and wait at least for 20 seconds.
(i) Check the DTC (See page 05–424).
OK:
DTC B1100/31 is not output.

HINT:
Codes other than code B1100/31 may be output at this time, but they are not relevant to this check.

NG → **REPLACE AIR BAG SENSOR ASSY CENTER**

OK

USE SIMULATION METHOD TO CHECK

DTC	B1135/24	HARF CONNECTION IN AIRBAG SENSOR ASSY CONNECTOR

CIRCUIT DESCRIPTION

The airbag sensor assy center detects partial connection of connector.
DTC B1135/24 is recorded when the airbag sensor assy center detects an open in the electrical connection check mechanism of the airbag sensor connector or in the airbag sensor circuit.

DTC No.	DTC Detecting Condition	Trouble Area
B1135/24	• Malfunction of electrical connection check mechanism of airbag sensor assy center connector • Airbag sensor assy center malfunction	• Electrical connection check mechanism • Airbag sensor assy center

INSPECTION PROCEDURE

1	CHECK AIRBAG SENSOR ASSY CENTER CONNECTOR

(a) Disconnect negative (–) terminal cable from the battery, and wait at least for 90 seconds.
(b) Check the connection of the airbag sensor assy center connectors.

NG → CONNECT CONNECTORS

OK

2	CHECK AIR BAG SENSOR ASSY CENTER

SST 09843–18040

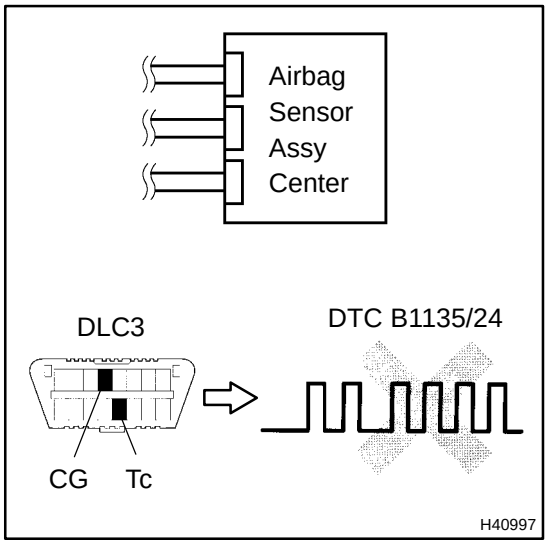

(a) Connect the negative (–) terminal cable to the battery, and wait at least for 2 seconds.
(b) Turn the ignition switch to ON, and wait at least for 20 seconds.
(c) Clear the DTC stored in memory (See page 05–424).
(d) Turn the ignition switch to LOCK, and wait at least for 20 seconds.
(e) Turn the ignition switch to ON, and wait at least for 20 seconds.
(f) Check the DTC (See page 05–424).
OK:
DTC B1135/24 is not output.

HINT:
Codes other than code B1135/24 may be output at this time, but they are not relevant to this check.

OK → USE SIMULATION METHOD TO CHECK

NG

3	CHECK PERFORM A VISUAL CHECK OF THE DISCONNECTION DETECTION PIN

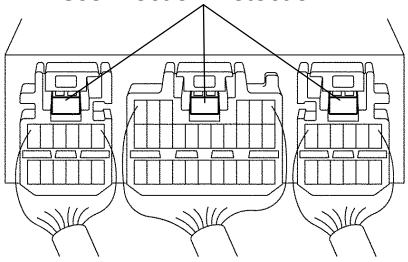

(a) Turn the ignition switch to LOCK.
(b) Disconnect the negative (–) terminal cable from the battery, and wait at least for 90 seconds.
(c) With 3 connectors connected to the airbag sensor assy center, place tester leads onto any 2 of 3 disconnection detection pins and check for continuity.
OK:
Continuity

NG → **REPAIR OR REPLACE AIRBAG SENSOR ASSY CENTER CONNECTOR**

OK

REPLACE AIR BAG SENSOR ASSY CENTER

DTC	B1140/32	SIDE AIRBAG SENSOR ASSY (RH) MALFUNCTION

CIRCUIT DESCRIPTION

The side airbag sensor assy (RH) circuit consists of the diagnosis circuit and lateral deceleration sensor, etc. It receives signals from the lateral deceleration sensor, judges whether or not the SRS must be activated, and detects diagnosis system malfunction.

DTC B1140/32 is recorded when occurrence of a malfunction in the side airbag sensor assy (RH) is detected.

DTC No.	DTC Detecting Condition	Trouble Area
B1140/32	• Short circuit in wire harness of side airbag sensor RH (to ground) • Short circuit in wire harness of side airbag sensor RH (to B+) • Open circuit in wire harness of side airbag sensor RH • Side airbag sensor assy RH malfunction • Airbag sensor assy center malfunction	• Side airbag sensor assy (RH) • Airbag sensor assy center • Instrument panel wire No.3

WIRING DIAGRAM

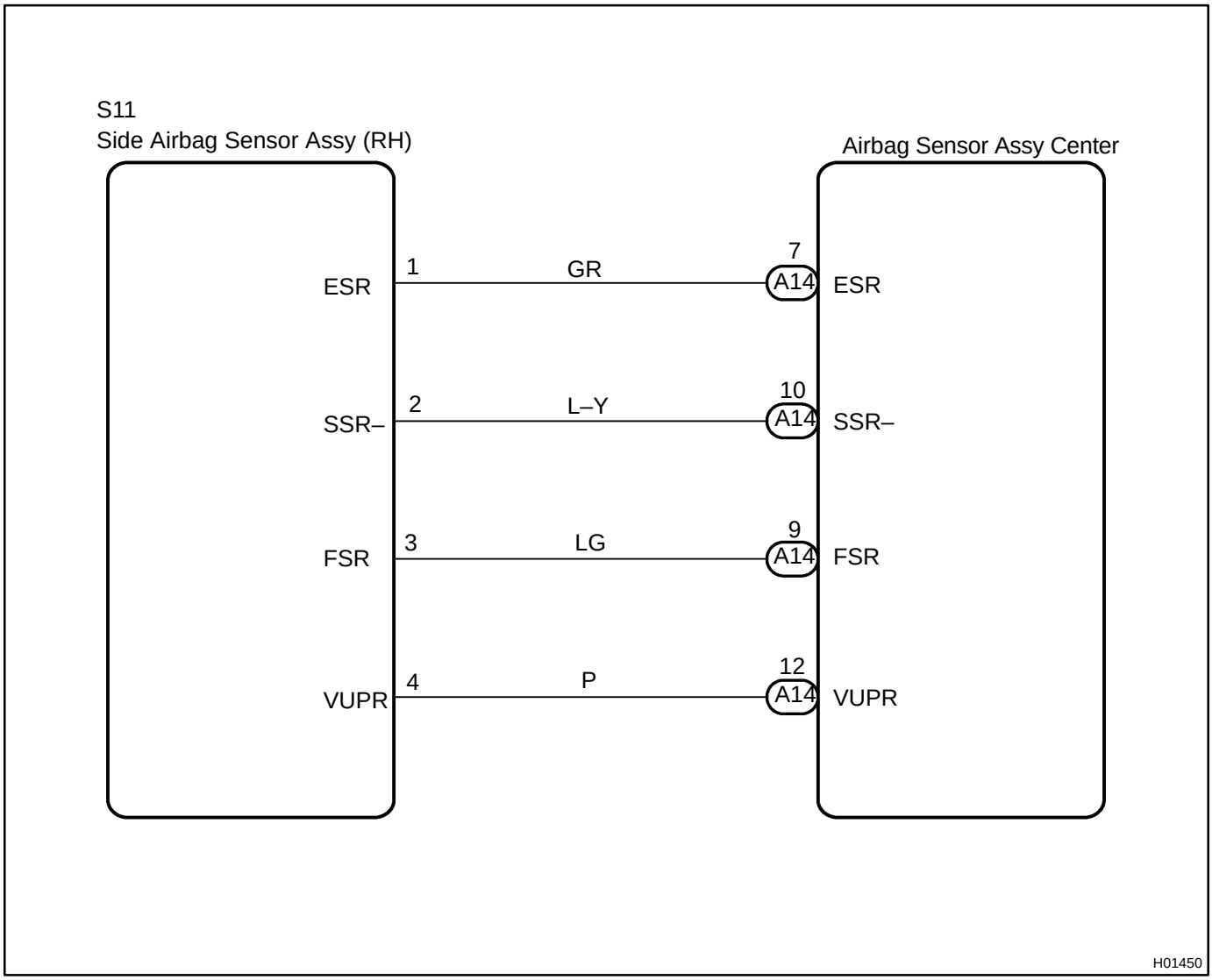

INSPECTION PROCEDURE

1	CHECK SIDE AIR BAG SENSOR ASSY RH

SST 09843–18040

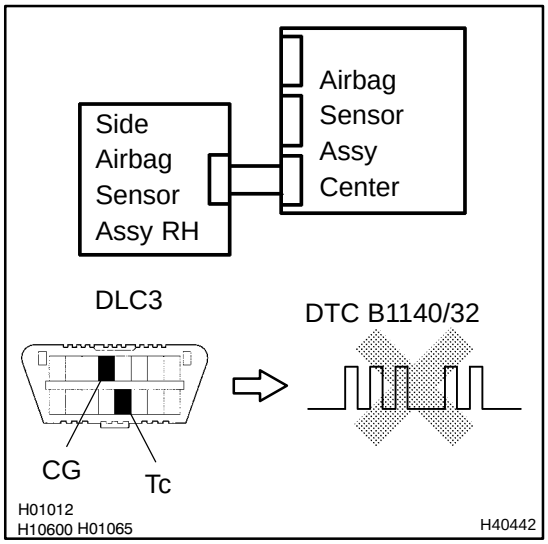

(a) Connect the negative (–) terminal cable to the battery, and wait at least for 2 seconds.
(b) Turn the ignition switch to ON, and wait at least for 20 seconds.
(c) Clear the DTC stored in memory (See page 05–424).
(d) Turn the ignition switch to LOCK, and wait at least for 20 seconds.
(e) Turn the ignition switch to ON, and wait at least for 20 seconds.
(f) Check the DTC (See page 05–424).
OK:
DTC B1140/32 is not output.

HINT:
Codes other than code B1140/32 may be output at this time, but they are not relevant to this check.

OK	USE SIMULATION METHOD TO CHECK

NG

2	CHECK AIRBAG SENSOR ASSY CENTER CONNECTOR

(a) Turn the ignition switch to LOCK.
(b) Disconnect the negative (–) terminal cable from the battery, and wait at least for 90 seconds.
(c) Check that the connectors is properly connected to the airbag sensor assy center.

NG	CONNECT CONNECTORS

OK

3	CHECK SIDE AIRBAG SENSOR ASSY CONNECTOR

(a) Check that the connector is properly connected to the side airbag sensor assy (RH).

NG	CONNECT CONNECTORS

OK

4	CHECK SIDE AIRBAG SENSOR ASSY(RH) CIRCUIT(OPEN)(AIRBAG SENSOR ASSY CENTER – SIDE AIRBAG SENSOR ASSY RH)

SST 09843–18040

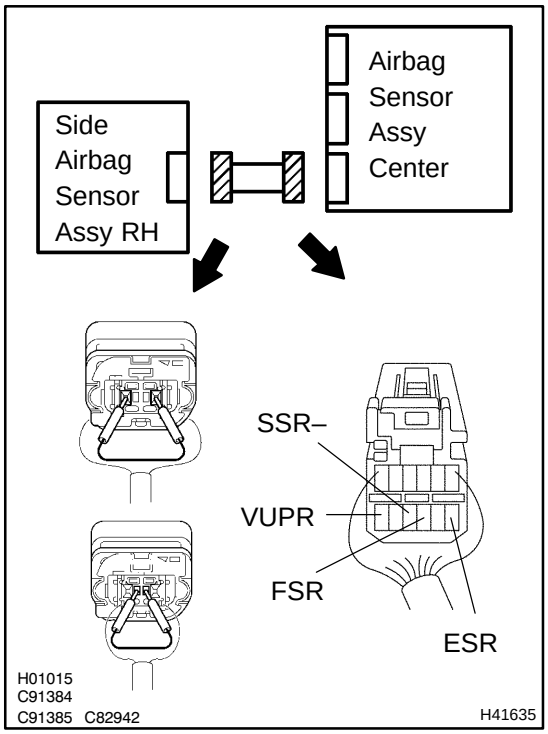

(a) Disconnect the connectors between the airbag sensor assy center and the side airbag sensor assy RH.

(b) Using a service wire, connect VUPR and ESR, and FSR and SSR– of the connector (on the side airbag sensor assy side) between the airbag sensor assy center and the side airbag sensor assy (RH).

(c) For the connector (on the airbag sensor assy center side) between the side airbag sensor assy RH and the airbag sensor assy center, measure the resistance between VUPR and ESR, and between FSR and SSR–.

OK:

Resistance: Below 1 Ω

NG → **REPAIR OR REPLACE INSTRUMENT PANEL WIRE NO.3(AIRBAG SENSOR ASSY CENTER – SIDE AIRBAG SENSOR ASSY RH)**

OK

5	CHECK SIDE AIRBAG SENSOR ASSY(RH) CIRCUIT(TO GROUND)(AIRBAG SENSOR ASSY CENTER – SIDE AIRBAG SENSOR ASSY RH)

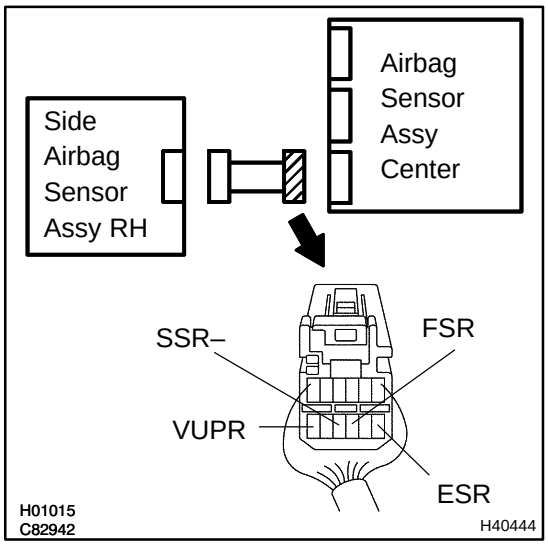

(a) Disconnect the connection between VUPR and ESR, and between FSR and SSR–.

(b) For the connector (on the airbag sensor assy center side) between the airbag sensor assy center and the side airbag sensor assy (RH), measure the resistance between each terminal of VUPR, SSR– and FSR, and body ground.

OK:

Resistance: 1MΩ or Higher

NG → **REPAIR OR REPLACE INSTRUMENT PANEL WIRE NO.3(AIRBAG SENSOR ASSY CENTER – SIDE AIRBAG SENSOR ASSY RH)**

OK

6	CHECK SIDE AIRBAG SENSOR ASSY(RH) CIRCUIT(AIRBAG SENSOR ASSY CENTER – SIDE AIRBAG SENSOR ASSY RH)

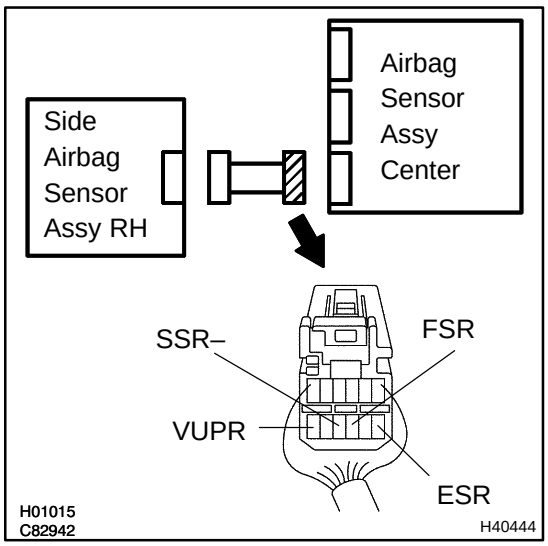

(a) For the connector (on the airbag sensor assy center side) between the airbag sensor assy center and the side airbag sensor assy (RH), measure the resistance between VUPR and ESR, and between FSR and SSR–.
OK:
Resistance: 1MΩ or Higher

NG → **REPAIR OR REPLACE INSTRUMENT PANEL WIRE NO.3(AIRBAG SENSOR ASSY CENTER – SIDE AIRBAG SENSOR ASSY RH)**

OK

7	CHECK SIDE AIRBAG SENSOR ASSY(RH) CIRCUIT(TO B+)(AIRBAG SENSOR ASSY CENTER – AIDE AIRBAG SENSOR ASSY RH)

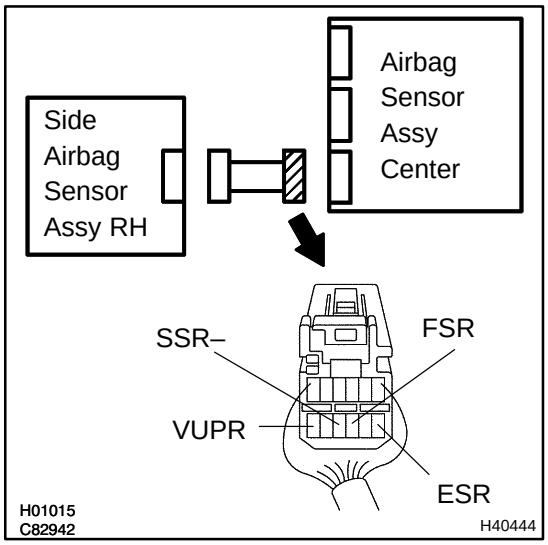

(a) Connect the negative (–) terminal cable to the battery, and wait at least for 2 seconds.
(b) Turn the ignition switch to ON.
(c) For the connector (on the airbag sensor assy center side) between the airbag sensor assy center and the side airbag sensor assy (RH), measure the voltage between each terminal of VUPR, SSR– and FSR, and body ground.
OK:
Voltage: Below 1 V

NG → **REPAIR OR REPLACE INSTRUMENT PANEL WIRE NO.3(AIRBAG SENSOR ASSY CENTER – SIDE AIRBAG SENSOR ASSY RH)**

OK

8	CHECK SIDE AIR BAG SENSOR ASSY RH

SST 09843–18040

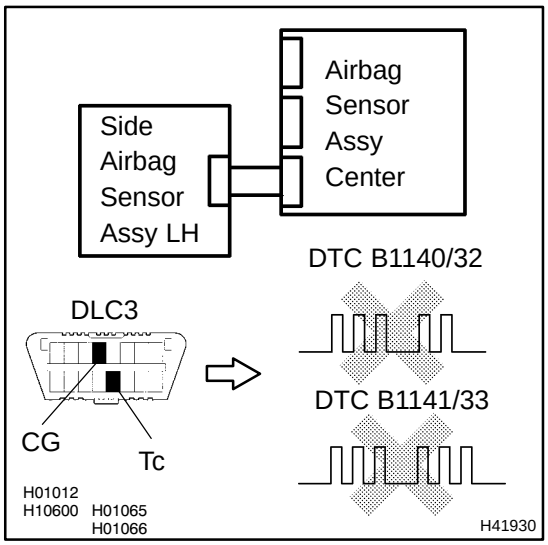

(a) Turn the ignition switch to LOCK.
(b) Disconnect the negative (–) terminal cable from the battery, and wait at least for 90 seconds.
(c) Connect the airbag sensor assy center connector.
(d) Interchange the side airbag sensor assy (RH) and LH and connect the connectors to them.
(e) Connect the negative (–) terminal cable to the battery, and wait at least for 2 seconds.
(f) Turn the ignition switch to ON, and wait at least for 20 seconds.
(g) Clear the DTC stored in memory (See page 05–424).
(h) Turn the ignition switch to LOCK, and wait at least for 20 seconds.
(i) Turn the ignition switch to ON, and wait at least for 20 seconds.
(j) Check the DTC (See page 05–424).

OK:
(A): DTC B1140/32 is not output.
(B): DTC B1141/33 is not output.

NG(A)	REPLACE AIR BAG SENSOR ASSY CENTER

NG(B)	REPLACE SIDE AIR BAG SENSOR ASSY RH

OK

9	USE SIMULATION METHOD TO CHECK

NG	Go to step 1

OK

REPLACE ALL SRS COMPONENTS INCLUDING THE WIRE HARNESS

DTC	B1141/33	SIDE AIRBAG SENSOR ASSY (LH) MALFUNCTION

CIRCUIT DESCRIPTION

The side airbag sensor assy (LH) circuit consists of the diagnosis circuit and lateral deceleration sensor, etc. It receives signals from the lateral deceleration sensor, judges whether or not the SRS must be activated, and detects diagnosis system malfunction.

DTC B1141/33 is recorded when occurrence of a malfunction in the side airbag sensor assy (LH) is detected.

DTC No.	DTC Detecting Condition	Trouble Area
B1141/33	• Short circuit in wire harness of side airbag sensor LH (to ground) • Short circuit in wire harness of side airbag sensor LH (to B+) • Open circuit in wire harness of side airbag sensor LH • Side airbag sensor assy LH malfunction • Airbag sensor assy center malfunction	• Side airbag sensor assy (LH) • Airbag sensor assy center • Instrument panel wire No.3

WIRING DIAGRAM

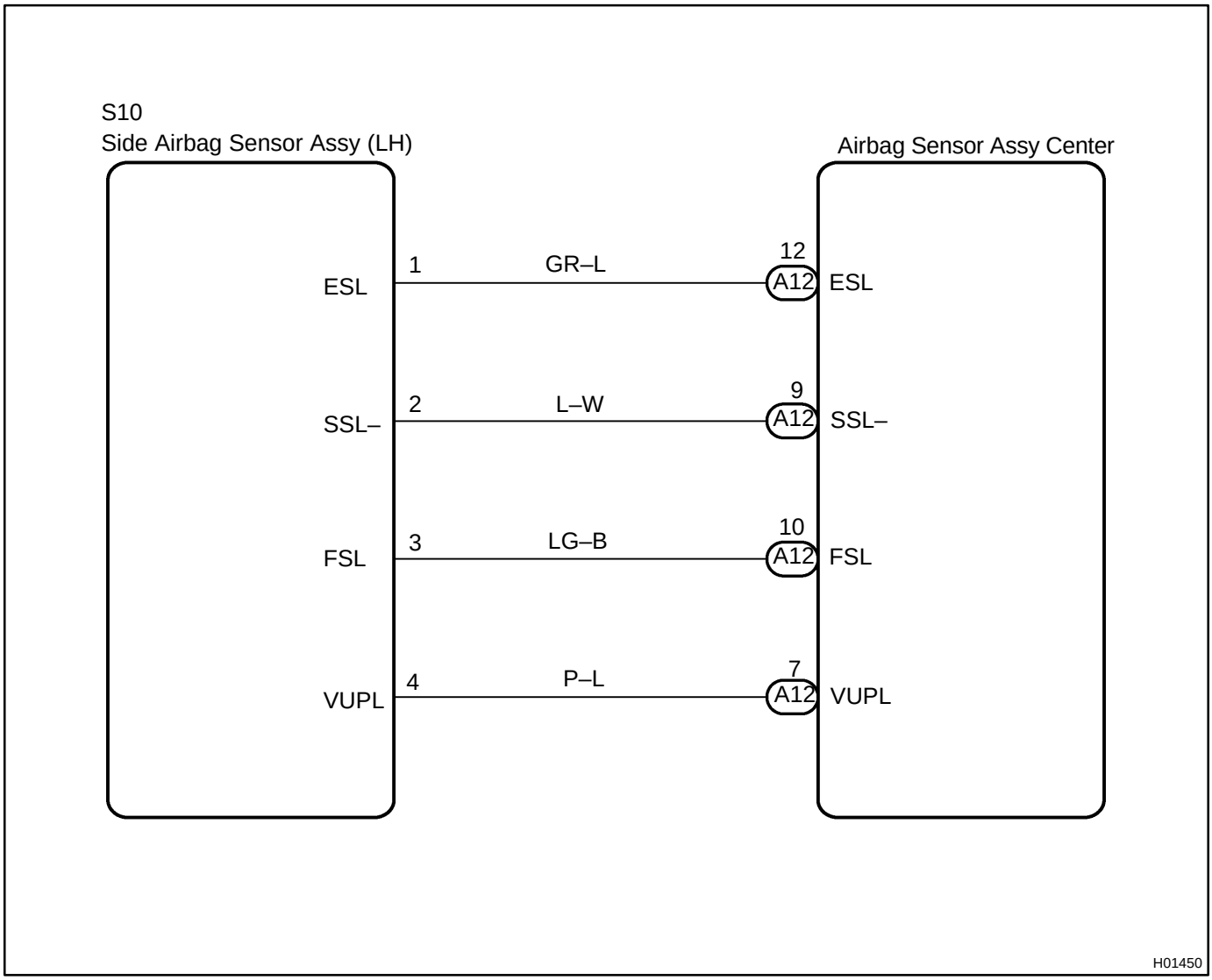

INSPECTION PROCEDURE

1	CHECK SIDE AIR BAG SENSOR ASSY LH

SST 09843–18040

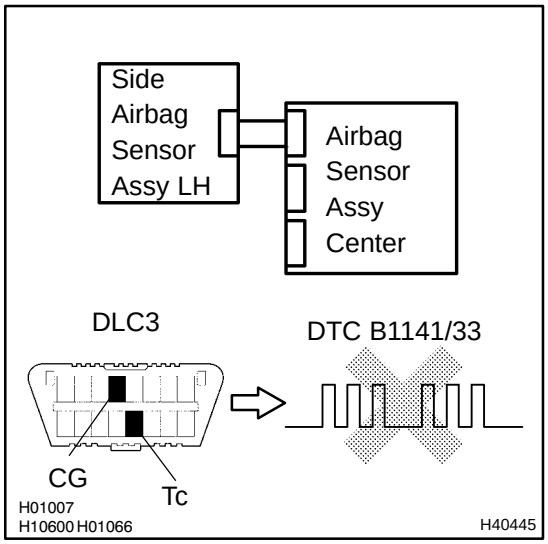

(a) Connect the negative (–) terminal cable to the battery, and wait at least for 2 seconds.
(b) Turn the ignition switch to ON, and wait at least for 20 seconds.
(c) Clear the DTC stored in memory (See page 05–424).
(d) Turn the ignition switch to LOCK, and wait at least for 20 seconds.
(e) Turn the ignition switch to ON, and wait at least for 20 seconds.
(f) Check the DTC (See page 05–424).
OK:
DTC B1141/33 is not output.

OK → **USE SIMULATION METHOD TO CHECK**

NG

2	CHECK AIRBAG SENSOR ASSY CENTER CONNECTOR

(a) Turn the ignition switch to LOCK.
(b) Disconnect the negative (–) terminal cable from the battery, and wait at least for 90 seconds.
(c) Check that the connectors is properly connected to the airbag sensor assy center.

NG → **CONNECT CONNECTORS**

OK

3	CHECK SIDE AIRBAG SENSOR ASSY CONNECTOR

(a) Check that the connector is properly connected to the side airbag sensor assy (LH).

NG → **CONNECT CONNECTORS**

OK

4	CHECK SIDE AIRBAG SENSOR ASSY(LH) CIRCUIT(OPEN)(AIRBAG SENSOR ASSY CENTER – SIDE AIRBAG SENSOR ASSY LH)

SST 09843–18040

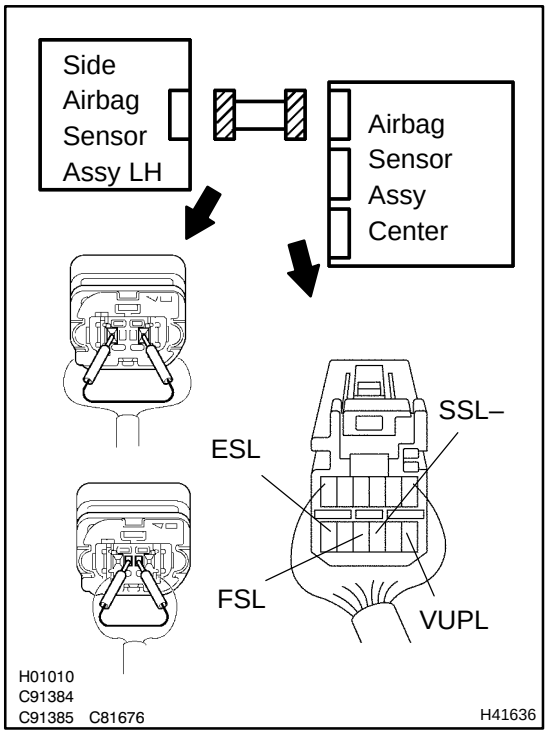

(a) Disconnect the connectors between the airbag sensor assy center and the side airbag sensor assy LH.

(b) Using a service wire, connect VUPL and ESL, and FSL and SSL– of the connector (on the side airbag sensor assy side) between the airbag sensor assy center and the side airbag sensor assy (LH).

(c) For the connector (on the airbag sensor assy center side) between the airbag sensor assy center and the side airbag sensor assy (LH), measure the resistance between VUPL and ESL, and between FSL and SSL–.

OK:

Resistance: Below 1 Ω

NG → **REPAIR OR REPLACE INSTRUMENT PANEL WIRE NO.3(AIRBAG SENSOR ASSY CENTER – SIDE AIRBAG SENSOR ASSY LH)**

OK

5	CHECK SIDE AIRBAG SENSOR ASSY(LH) CIRCUIT(TO GROUND)(AIRBAG SENSOR ASSY CENTER – SIDE AIRBAG SENSOR ASSY LH)

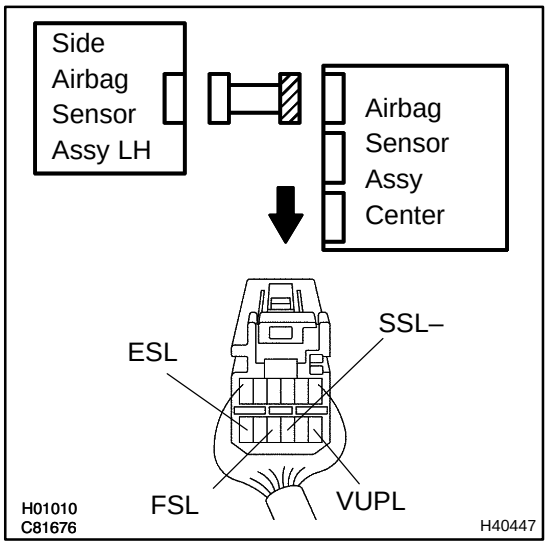

(a) Disconnect the connection between VUPL and ESL, and between FSL and SSL–.

(b) For the connector (on the airbag sensor assy center side) between the airbag sensor assy center and the side airbag sensor assy (LH), measure the resistance between each terminal of VUPL, SSL– and FSL, and body ground.

OK:

Resistance: 1MΩ or Higher

NG → **REPAIR OR REPLACE INSTRUMENT PANEL WIRE NO.3(AIRBAG SENSOR ASSY CENTER – SIDE AIRBAG SENSOR ASSY LH)**

OK

6	CHECK SIDE AIRBAG SENSOR ASSY(LH) CIRCUIT(AIRBAG SENSOR ASSY CENTER – SIDE AIRBAG SENSOR ASSY LH)

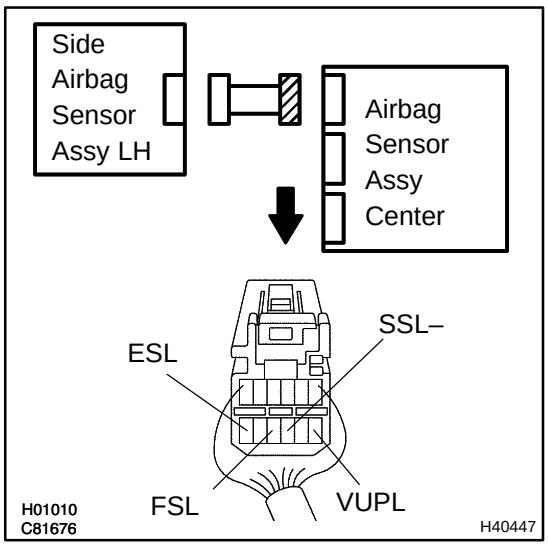

(a) For the connector (on the airbag sensor assy center side) between the airbag sensor assy center and the side airbag sensor assy (LH), measure the resistance between VUPL and ESL, and between FSL and SSL–.
OK:
Resistance: 1MΩ or Higher

NG → **REPAIR OR REPLACE INSTRUMENT PANEL WIRE NO.3(AIRBAG SENSOR ASSY CENTER – SIDE AIRBAG SENSOR ASSY LH)**

OK

7	CHECK SIDE AIRBAG SENSOR ASSY(LH) CIRCUIT(TO B+)(AIRBAG SENSOR ASSY CENTER – SIDE AIRBAG SENSOR ASSY LH)

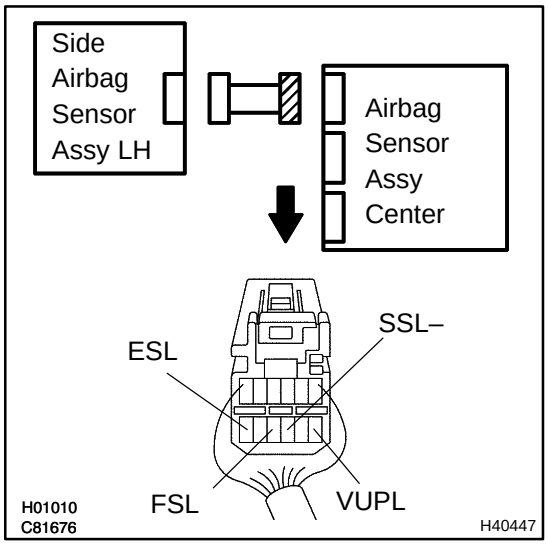

(a) Connect the negative (–) terminal cable to the battery, and wait at least for 2 seconds.
(b) Turn the ignition switch to ON.
(c) For the connector (on the airbag sensor assy center side) between the airbag sensor assy center and the side airbag sensor assy (LH), measure the voltage between each terminal of VUPL, SSL– and FSL, and body ground.
OK:
Voltage: Below 1V

NG → **REPAIR OR REPLACE INSTRUMENT PANEL WIRE NO.3(AIRBAG SENSOR ASSY CENTER – SIDE AIRBAG SENSOR ASSY LH)**

OK

8 CHECK SIDE AIR BAG SENSOR ASSY LH

SST 09843–18040

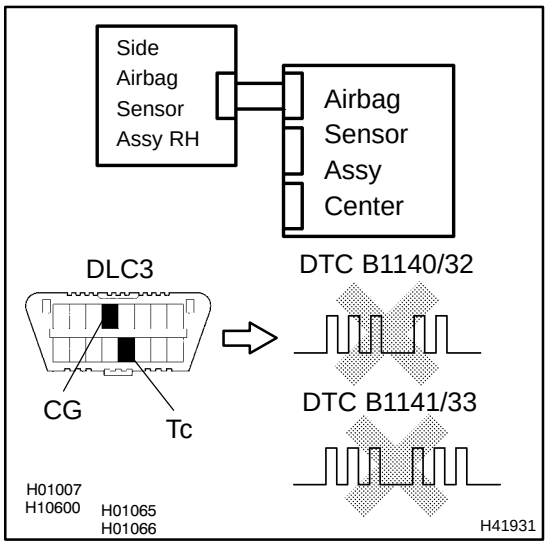

(a) Turn the ignition switch to LOCK.
(b) Disconnect the negative (–) terminal cable from the battery, and wait at least for 90 seconds.
(c) Connect the airbag sensor assy center connector.
(d) Interchange the side airbag sensor assy (LH) and RH and connect the connectors to them.
(e) Connect the negative (–) terminal cable to the battery, and wait at least for 2 seconds.
(f) Turn the ignition switch to ON, and wait at least for 20 seconds.
(g) Clear the DTC stored in memory (See page 05–424).
(h) Turn the ignition switch to LOCK, and wait at least for 20 seconds.
(i) Turn the ignition switch to ON, and wait at least for 20 seconds.
(j) Check the DTC (See page 05–424).

OK:
(A): DTC B1140/32 is not output.
(B): DTC B1141/33 is not output.

NG(A) → REPLACE SIDE AIR BAG SENSOR ASSY LH

NG(B) → REPLACE AIR BAG SENSOR ASSY CENTER

OK

9 USE SIMULATION METHOD TO CHECK

NG → Go to step 1

OK

REPLACE ALL SRS COMPONENTS INCLUDING THE WIRE HARNESS

DTC B1153/25 SEAT POSITION AIRBAG SENSOR MALFUNCTION

CIRCUIT DESCRIPTION

The seat position sensor circuit consists of the airbag sensor assy center and seat position sensor. DTC B1153/25 is recorded when a malfunction is detected in the seat position sensor circuit.

DTC No.	DTC Detecting Condition	Trouble Area
B1153/25	• Short circuit between LSP+ wire harness and LSP– wire harness (to B+) • Short circuit between LSP+ wire harness and LSP– wire harness (to ground) • Open circuit in LSP+ wire harness or LSP– wire harness • Seat position airbag sensor malfunction • Airbag sensor assy center malfunction	• Seat position airbag sensor • Airbag sensor assy center • Wire harness (Seat position airbag sensor – Front seat inner belt assy) • Instrument panel wire No.3

WIRING DIAGRAM

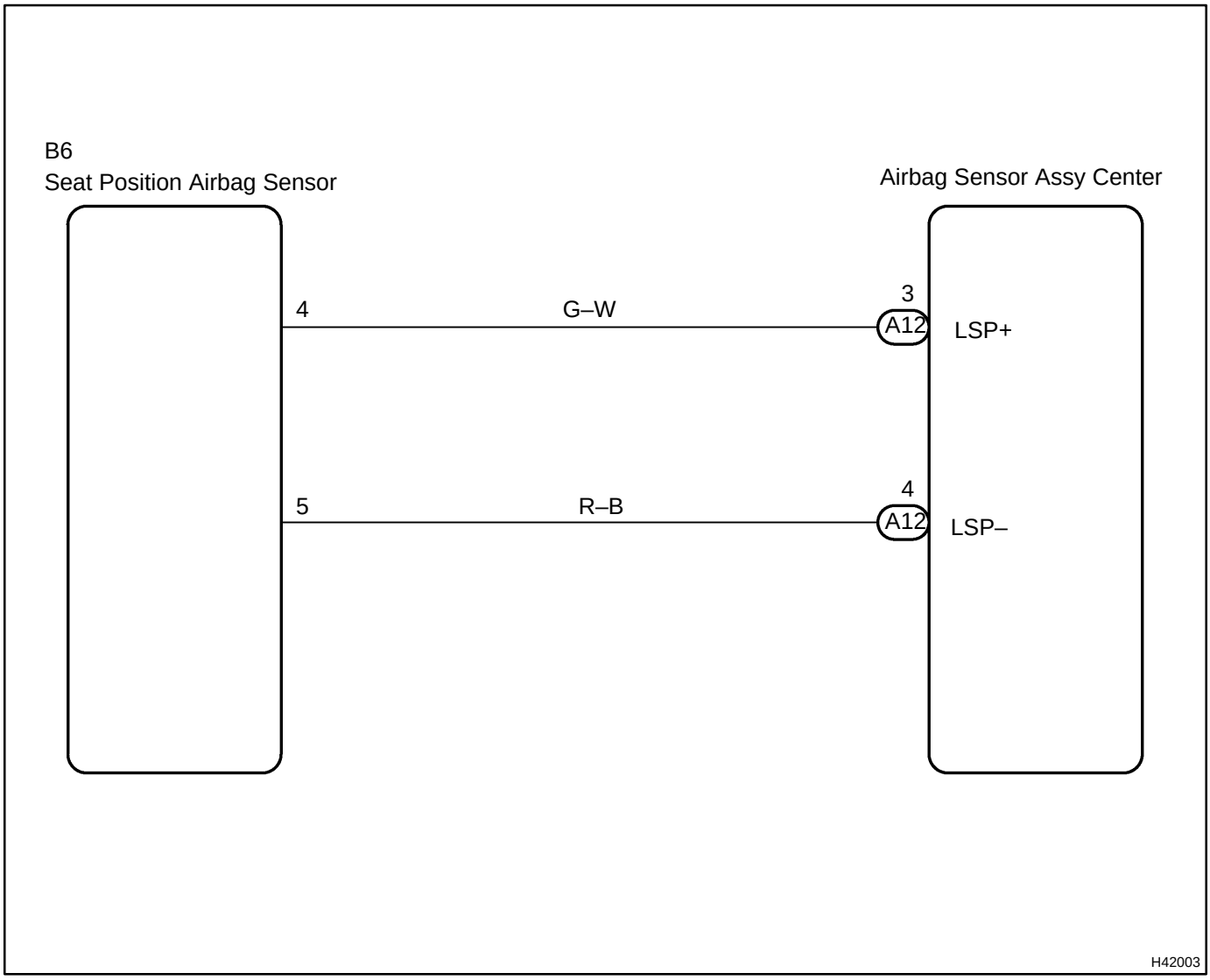

INSPECTION PROCEDURE

1 CHECK SEAT POSITION AIR BAG SENSOR

SST 09843–18040

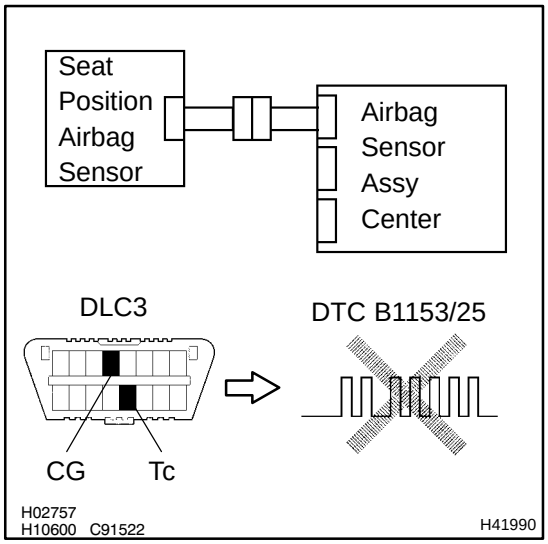

(a) Turn the ignition switch to ON, and wait at least for 20 seconds.
(b) Clear the DTC stored in memory (See page 05–424).
(c) Turn the ignition switch to LOCK, and wait at least for 20 seconds.
(d) Turn the ignition switch to ON, and wait at least for 20 seconds.
(e) Check the DTC (See page 05–424).

OK:

DTC B1153/25 is not output.

HINT:

Codes other than code B1153/25 may be output at this time, but they are not relevant to this check.

OK → **USE SIMULATION METHOD TO CHECK**

NG

2 CHECK AIRBAG SENSOR ASSY CENTER CONNECTOR

(a) Turn the ignition switch to LOCK.
(b) Disconnect the negative (–) terminal cable from the battery, and wait at least for 90 seconds.
(c) Check that the connector is properly connected to the airbag sensor assy center.

NG → **CONNECT CONNECTORS**

OK

3 CHECK SEAT POSITION AIRBAG SENSOR CONNECTOR

(a) Check that the connector is properly connected to the seat position airbag sensor.

NG → **CONNECT CONNECTORS**

OK

4	CHECK SEAT POSITION AIRBAG SENSOR CIRCUIT (OPEN)(AIRBAG SENSOR ASSY CENTER – SEAT POSITION AIRBAG SENSOR)

SST 09843–18040

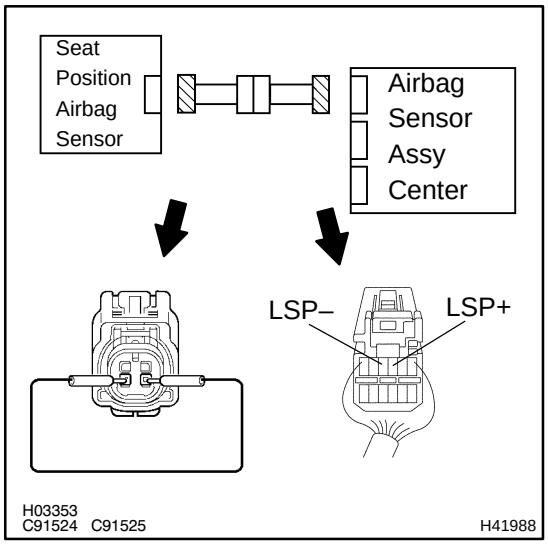

(a) Disconnect the connectors between the airbag sensor assy center and the seat position airbag sensor.

(b) Using a service wire, connect LSP+ and LSP– of the connector (on the seat position airbag sensor side) between the airbag sensor assy center and the seat position airbag sensor.

(c) For the connector (on the airbag sensor assy center side) between the airbag sensor assy center and the seat position airbag sensor, measure the resistance between LSP+ and LSP–.

OK:

Resistance: Below 1 Ω

NG → **Go to step 10**

OK

5	CHECK SEAT POSITION AIRBAG SENSOR CIRCUIT (TO GROUND)(AIRBAG SENSOR ASSY CENTER – SEAT POSITION AIRBAG SENSOR)

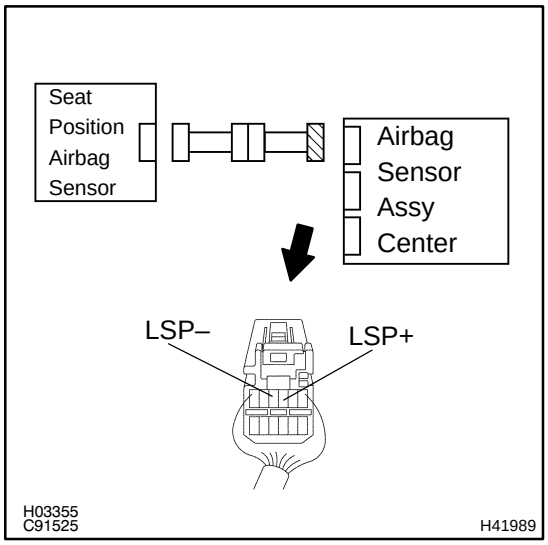

(a) Release the service wire of the connector (on the seat position airbag sensor side) between the seat position airbag sensor and the airbag sensor assy center.

(b) For the connector (on the airbag sensor assy center side) between the airbag sensor assy center and the seat position airbag sensor, measure the resistance between body ground and each of LSP+ and LSP–.

OK:

Resistance: 1 MΩ or Higher

NG → **Go to step 11**

OK

6	CHECK SEAT POSITION AIRBAG SENSOR CIRCUIT(AIRBAG SENSOR ASSY CENTER – SEAT POSITION AIRBAG SENSOR)

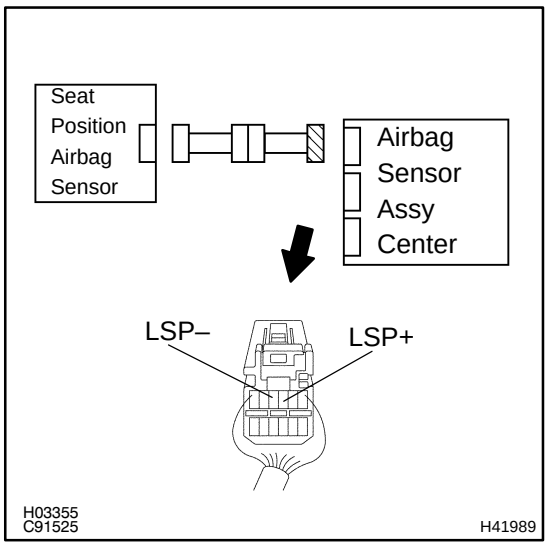

(a) For the connector (on the airbag sensor assy center side) between the airbag sensor assy center and the seat position airbag sensor, measure the resistance between LSP+ and LSP–.

OK:

Resistance: 1 MΩ or Higher

NG → **Go to step 12**

OK

7	CHECK SEAT POSITION AIRBAG SENSOR CIRCUIT (TO B+)(AIRBAG SENSOR ASSY CENTER – SEAT POSITION AIRBAG SENSOR)

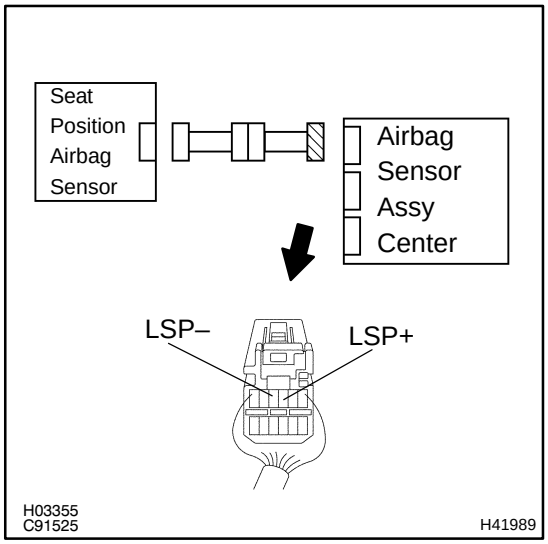

(a) Connect the negative (–) terminal cable to the battery, and wait at least for 2 seconds.

(b) Turn the ignition switch to ON.

(c) For the connector (on the airbag sensor assy center side) between the airbag sensor assy center and the seat position airbag sensor, measure the voltage between the body ground and each of LSP+ and LSP–.

OK:

Voltage: Below 1 V

NG → **Go to step 13**

OK

8 CHECK SEAT POSITION AIR BAG SENSOR

SST 09843–18040

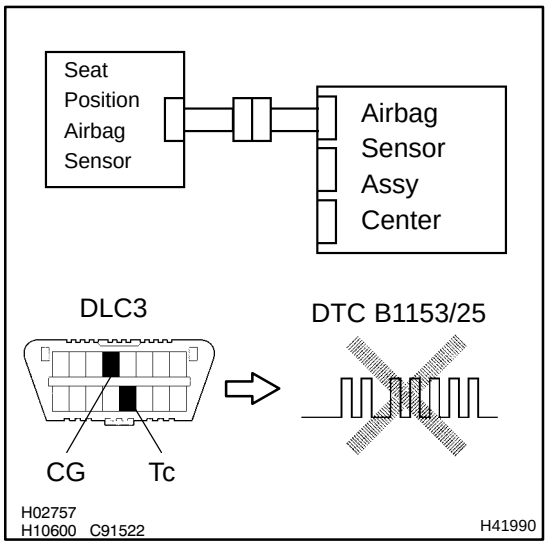

(a) Turn the ignition switch to LOCK.
(b) Disconnect the negative (–) terminal cable from the battery, and wait at least for 90 seconds.
(c) Connect the connectors of the seat position airbag sensor and the airbag sensor assy center.
(d) Connect the negative (–) terminal cable to the battery, and wait at least for 2 seconds.
(e) Turn the ignition switch to ON, and wait at least for 20 seconds.
(f) Clear the DTC stored in memory (See page 05–424).
(g) Turn the ignition switch to LOCK, and wait at least for 20 seconds.
(h) Turn the ignition switch to ON, and wait at least for 20 seconds.
(i) Check the DTC (See page 05–424).

OK:

DTC D1153/25 is not output.

HINT:

Codes other that code B1153/25 may be output at this time, but they are not relevant to this check.

NG → **REPLACE SEAT POSITION AIR BAG SENSOR**

OK

USE SIMULATION METHOD TO CHECK

9	CHECK AIR BAG SENSOR ASSY CENTER

SST 09843–18040

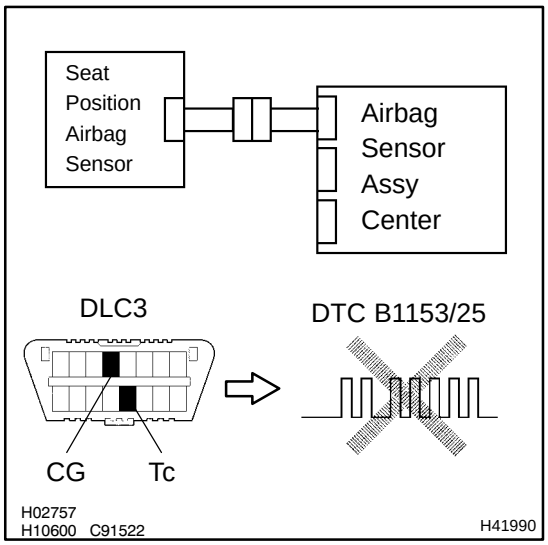

(a) Turn the ignition switch to LOCK.
(b) Disconnect the negative (–) terminal cable from the battery, and wait at least for 90 seconds.
(c) Connect the connector of a new seat position airbag sensor.
(d) Connect the negative (–) terminal cable to the battery, and wait at least for 2 seconds.
(e) Turn the ignition switch to ON, and wait at least for 20 seconds.
(f) Clear the DTC stored in memory (See page 05–424).
(g) Turn the ignition switch to LOCK, and wait at least for 20 seconds.
(h) Turn the ignition switch to ON, and wait at least for 20 seconds.
(i) Check the DTC (See page 05–424).

OK:

DTC D1153/25 is not output.

HINT:

Codes other that code B1153/25 may be output at this time, but they are not relevant to this check.

NG → **REPLACE AIR BAG SENSOR ASSY CENTER**

OK

USE SIMULATION METHOD TO CHECK

10	CHECK WIRE HARNESS(SEAT POSITION AIRBAG SENSOR – FRONT SEAT INNER BELT ASSY)

SST 09843–18040

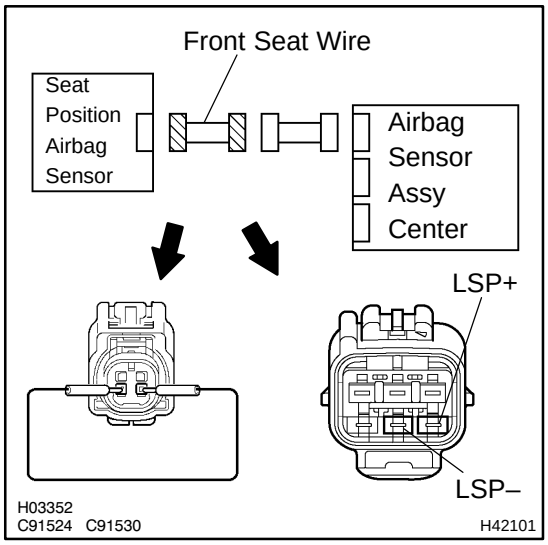

(a) Disconnect the front seat wire connector on the airbag sensor assy center side.

(b) For the front seat wire connector (on the airbag sensor assy center side) between the airbag sensor assy center and the seat position airbag sensor, measure the resistance between LSP+ and LSP–.

OK:

Resistance: Below 1 Ω

NG → **REPAIR OR REPLACE WIRE HARNESS(SEAT POSITION SENSOR – FRONT SEAT INNER BELT ASSY)**

OK

REPAIR OR REPLACE INSTRUMENT PANEL WIRE NO.3(AIRBAG SENSOR ASSY CENTER – FRONT SEAT INNER BELT ASSY)

11	CHECK WIRE HARNESS(SEAT POSITION AIRBAG SENSOR – FRONT SEAT INNER BELT ASSY)

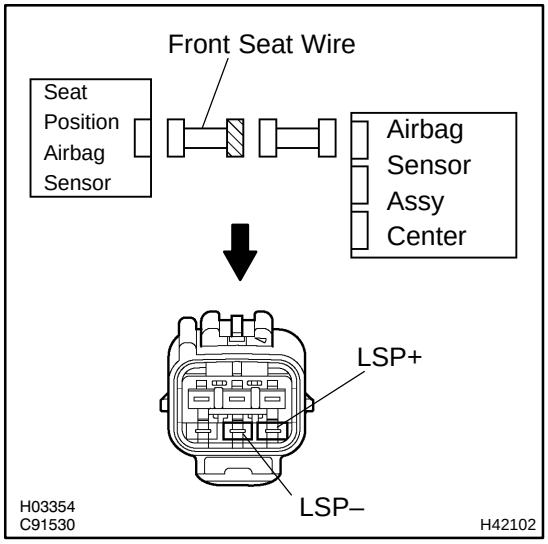

(a) Disconnect the front seat wire connector on the airbag sensor assy center side.

(b) For the front seat wire connector (on the airbag sensor assy center side) between the airbag sensor assy center and the seat position sensor, measure the resistance between body ground and each of LSP+ and LSP–.

OK:

Resistance: 1 MΩ or Higher

NG → **REPAIR OR REPLACE WIRE HARNESS(SEAT POSITION SENSOR – FRONT SEAT INNER BELT ASSY)**

OK

REPAIR OR REPLACE INSTRUMENT PANEL WIRE NO.3(AIRBAG SENSOR ASSY CENTER – FRONT SEAT INNER BELT ASSY)

12	CHECK WIRE HARNESS(SEAT POSITION AIRBAG SENSOR – FRONT SEAT INNER BELT ASSY)

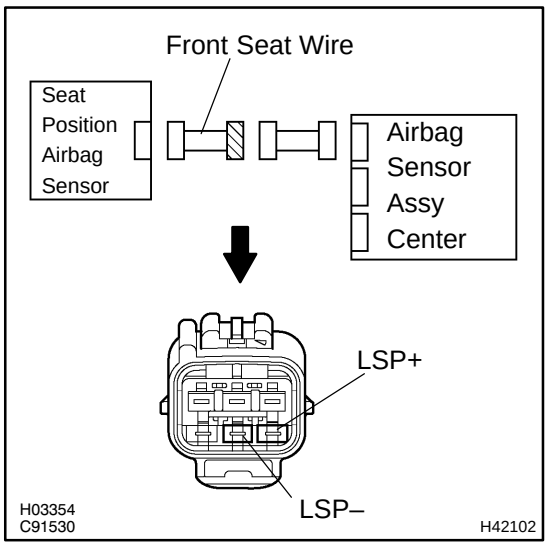

(a) Disconnect the negative (–) terminal cable from the battery, and wait at least for 90 seconds.
(b) Disconnect the front seat wire connector on the airbag sensor assy center side.
(c) Connect the negative (–) terminal cable to the battery, and wait at least for 2 seconds.
(d) Turn the ignition switch to ON, and wait at least for 60 seconds.
(e) For the front seat wire connector (on the airbag sensor assy center side) between the front seat inner belt assy and the seat position airbag sensor, measure the voltage between body ground and each of LSP+ and LSP–.
OK:
Voltage: Below 1 V

NG → **REPAIR OR REPLACE WIRE HARNESS(SEAT POSITION AIRBAG SENSOR – FRONT SEAT INNER BELT ASSY)**

OK

REPAIR OR REPLACE INSTRUMENT PANEL WIRE NO.3(AIRBAG SENSOR ASSY CENTER – FRONT SEAT INNER BELT ASSY)

13	CHECK WIRE HARNESS(SEAT POSITION AIRBAG SENSOR – FRONT SEAT INNER BELT ASSY)

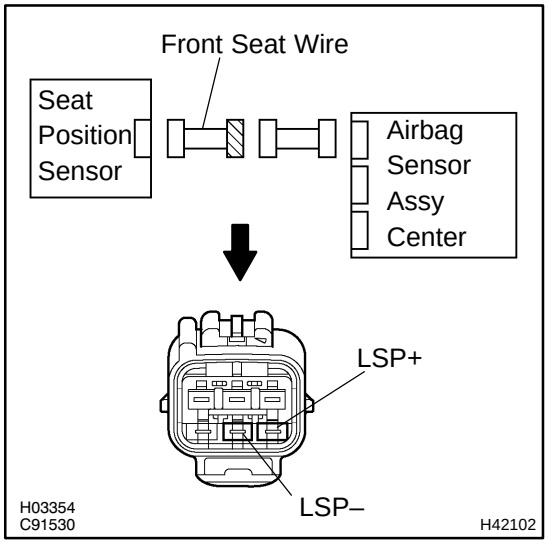

(a) Turn the ignition switch to LOCK.
(b) For the front seat wire connector (on the airbag sensor assy center side) between the airbag sensor assy center and the seat position sensor, measure the resistance between LSP+ and LSP–.
OK:
Resistance: 1 MΩ or Higher

NG → **REPAIR OR REPLACE WIRE HARNESS(SEAT POSITION AIRBAG SENSOR – FRONT SEAT INNER BELT ASSY)**

OK

REPAIR OR REPLACE INSTRUMENT PANEL WIRE NO.3(AIRBAG SENSOR ASSY CENTER – FRONT SEAT INNER BELT ASSY)

DTC	B1156/15	FRONT AIRBAG SENSOR (RH) MALFUNCTION

DTC	B1157/15	FRONT AIRBAG SENSOR (RH) MALFUNCTION

CIRCUIT DESCRIPTION

The airbag front RH sensor circuit consists of the airbag sensor assy center and airbag front RH sensor. DTC B1156/B1157/15 is recorded when a malfunction is detected in the airbag front RH sensor circuit.

DTC No.	DTC Detecting Condition	Trouble Area
B1156/B1157/15	• Airbag front RH sensor malfunction	• Airbag front RH sensor • Airbag sensor assy center • Instrument panel wire • Engine room main wire

WIRING DIAGRAM

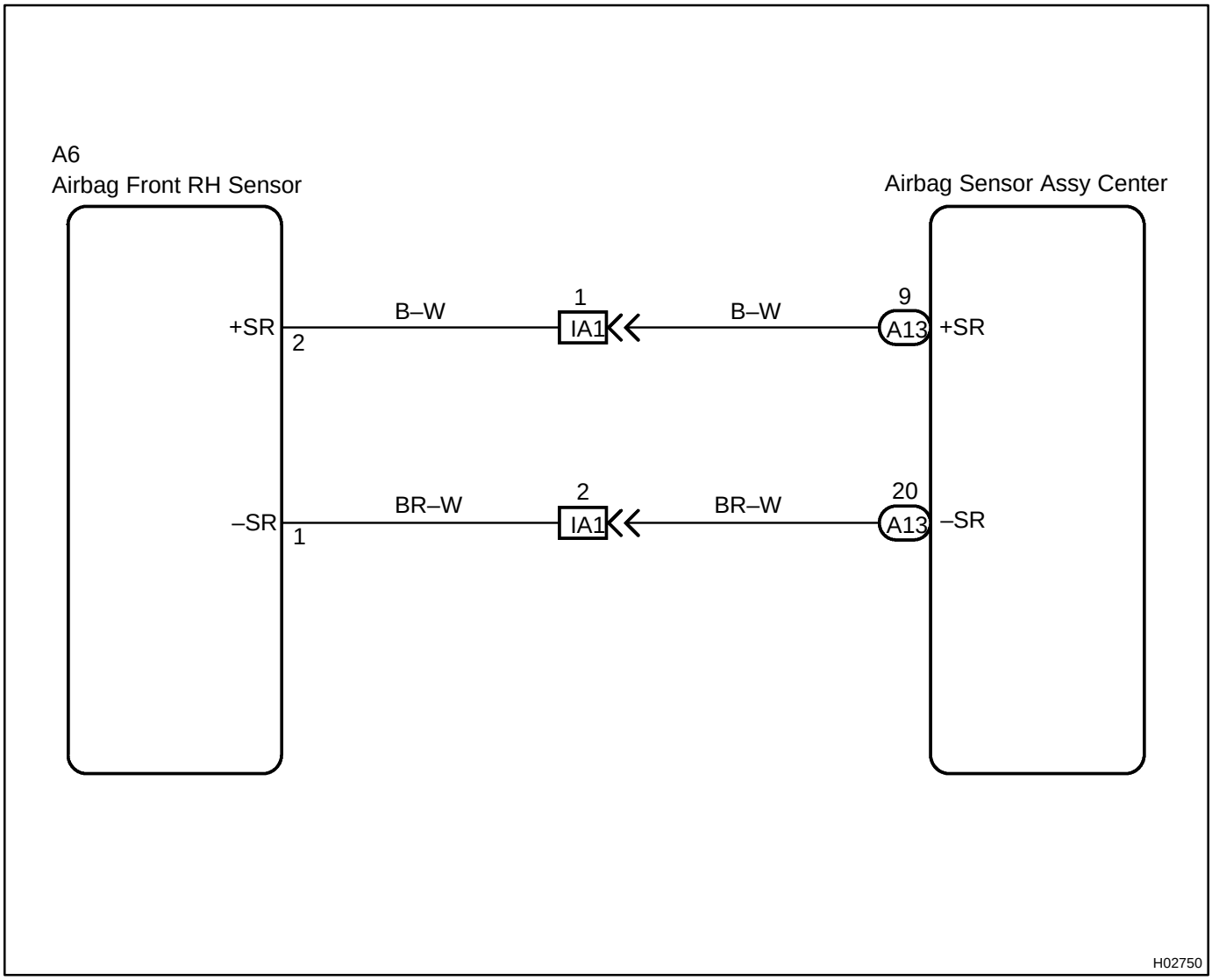

INSPECTION PROCEDURE

1	CHECK FRONT AIRBAG SENSOR (RH) CIRCUIT (TO B+)(AIRBAG SENSOR ASSY CENTER – AIRBAG FRONT RH SENSOR)

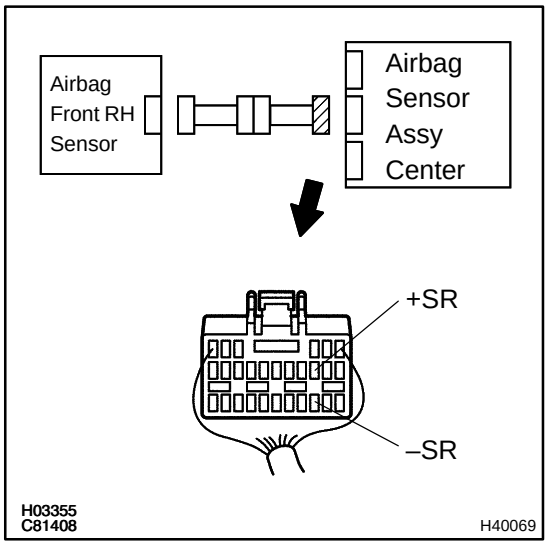

(a) Disconnect the negative (–) terminal cable from the battery, and wait at least for 90 seconds.
(b) Disconnect the connectors between the airbag front RH sensor and the airbag sensor assy center.
(c) Connect the negative (–) terminal cable to the battery, and wait at least for 2 seconds.
(d) Turn the ignition switch to ON.
(e) For the connector (on the airbag sensor assy center side) between the airbag front RH sensor and the airbag sensor assy center, measure the voltage between body ground and each of +SR and –SR.
OK:
Voltage: Below 1 V

NG → **Go to step 6**

OK

2	CHECK FRONT AIRBAG SENSOR (RH) CIRCUIT (TO GROUND)(AIRBAG SENSOR ASSY – AIRBAG FRONT RH SENSOR)

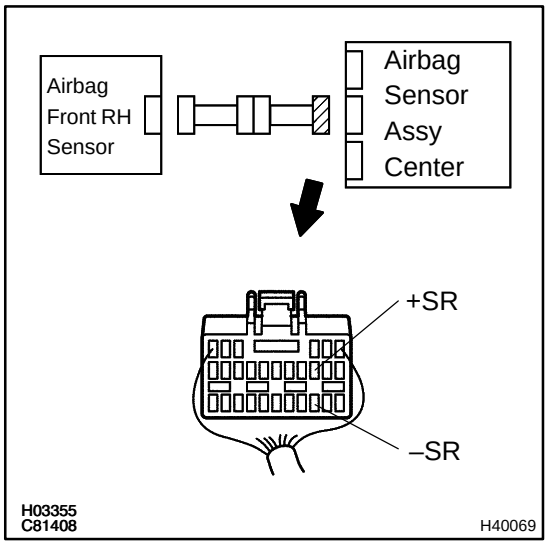

(a) Turn the ignition switch to LOCK.
(b) Disconnect the negative (–) terminal cable from the battery, and wait at least for 90 seconds.
(c) For the connector (on the airbag sensor assy center side) between the airbag front RH sensor and the airbag sensor assy center, measure the resistance between body ground and each of +SR and –SR.
OK:
Resistance: 1 MΩ or Higher

NG → **Go to step 7**

OK

3	CHECK FRONT AIRBAG SENSOR (RH) CIRCUIT(OPEN)(AIRBAG SENSOR ASSY CENTER – AIRBAG FRONT RH SENSOR)

SST 09843–18040

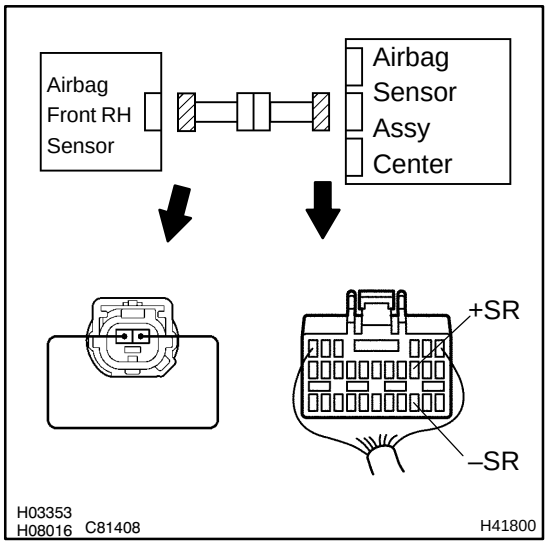

(a) Using a service wire, connect +SR and –SR of the connector (on the airbag front RH sensor side) between the airbag front RH sensor and the airbag sensor assy center.

(b) For the connector (on the airbag sensor assy center side) between the airbag front RH sensor and the airbag sensor assy center, measure the resistance between +SR and –SR.

OK:

Resistance: Below 1 Ω

NG → **Go to step 8**

OK

4	INSPECT AIR BAG FRONT RH SENSOR

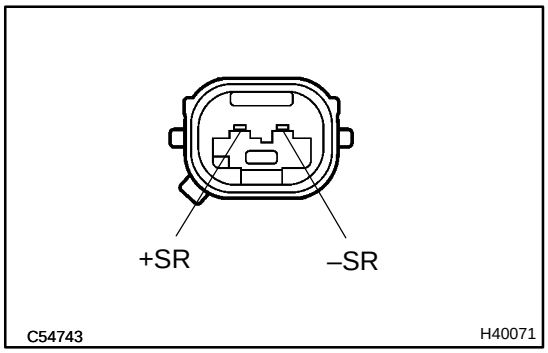

(a) For the connector of the airbag front RH sensor, measure the resistance between +SR and –SR.

OK:

Resistance: 820 Ω

NG → **REPLACE AIR BAG FRONT RH SENSOR**

OK

5 CHECK AIR BAG SENSOR ASSY CENTER

SST 09843–18040

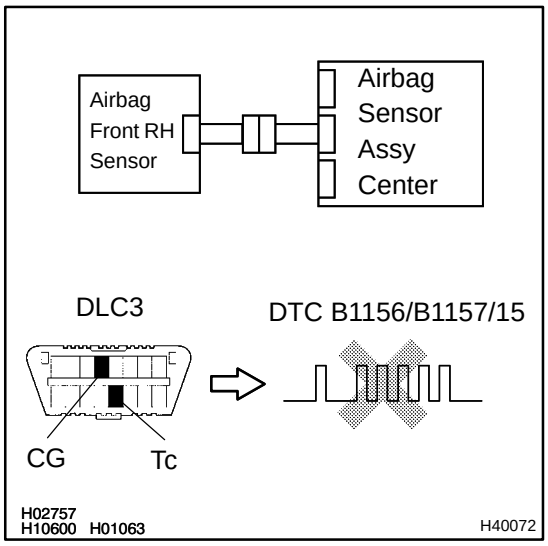

(a) Disconnect the negative (–) terminal cable from the battery, and wait at least for 90 seconds.
(b) Connect the airbag front RH sensor connector and airbag sensor assy center connector.
(c) Connect the negative (–) terminal cable to the battery, and wait at least for 2 seconds.
(d) Turn the ignition switch to ON, and wait at least for 20 seconds.
(e) Clear the DTC stored in memory (See page 05–424).
(f) Turn the ignition switch to LOCK, and wait at least for 20 seconds.
(g) Turn the ignition switch to ON, and wait at least for 20 seconds.
(h) Check the DTC (See page 05–424).

OK:

DTC B1156/B1157/15 is not output.

HINT:

Codes other than code B1156/B1157/15 may be output at this time, but they are not relevant to this check.

NG → **REPLACE AIR BAG SENSOR ASSY CENTER**

OK

USE SIMULATION METHOD TO CHECK

6	CHECK ENGINE ROOM MAIN WIRE HARNESS (TO B+)(CONNECTOR – AIRBAG FRONT RH SENSOR)

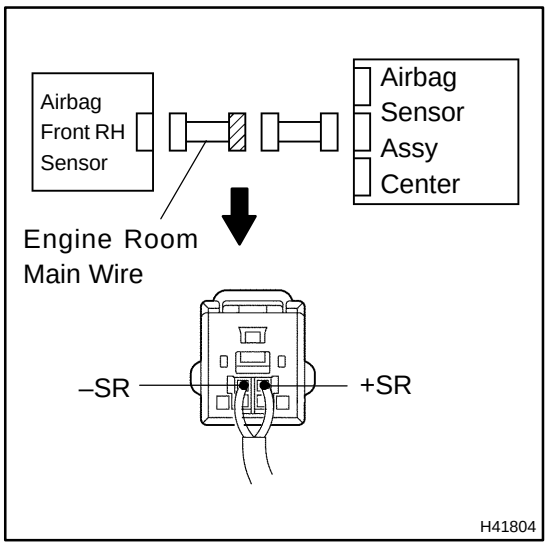

(a) Turn the ignition switch to LOCK.
(b) Disconnect the negative (–) terminal cable from the battery, and wait at least for 90 seconds.
(c) Disconnect the connector between the engine room main wire and the instrument panel wire.
(d) Connect the negative (–) terminal cable to the battery, and wait at least for 2 seconds.
(e) Turn the ignition switch to ON.
(f) For the engine room main wire connector (on the airbag sensor assy center side) between the airbag sensor assy center and the airbag front RH sensor, measure the voltage between body ground and each of +SR and –SR.
OK:
Voltage: Below 1 V

NG → **REPAIR OR REPLACE ENGINE ROOM MAIN WIRE**

OK

REPAIR OR REPLACE INSTRUMENT PANEL WIRE

7	CHECK ENGINE ROOM MAIN WIRE HARNESS (TO GROUND)(CONNECTOR – AIRBAG FRONT RH SENSOR)

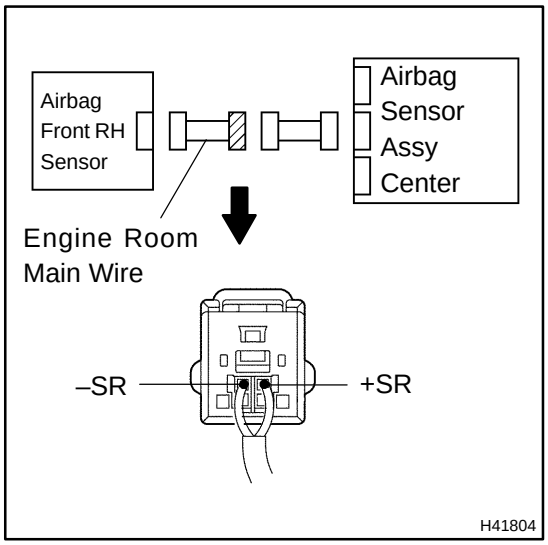

(a) Disconnect the connectors between the engine room main wire and the instrument panel wire.
(b) For the engine room main wire connector (on the airbag sensor assy center side) between the airbag sensor assy center and the airbag front RH sensor, measure the resistance between body ground and each of +SR and –SR.
OK:
Resistance: 1 MΩ or Higher

NG → **REPAIR OR REPLACE ENGINE ROOM MAIN WIRE**

OK

REPAIR OR REPLACE INSTRUMENT PANEL WIRE

8	CHECK ENGINE ROOM MAIN WIRE HARNESS(OPEN)(CONNECTOR – AIRBAG FRONT RH SENSOR)

SST 09843–18040

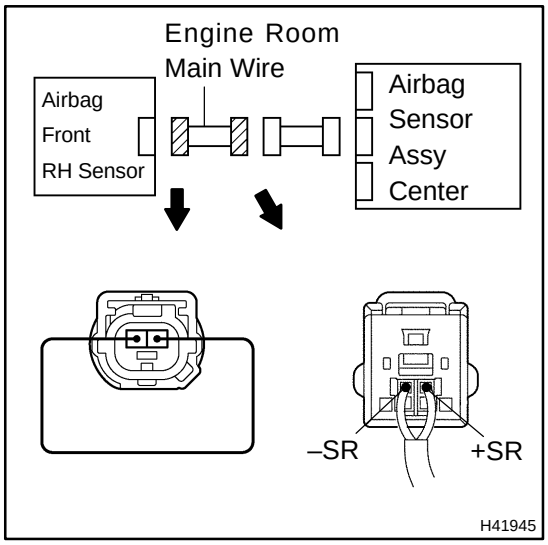

(a) Disconnect the connectors between the engine room main wire and the instrument panel wire.

(b) Using a service wire, connect +SR and –SR of the engine room main wire connector (on the airbag front RH sensor side) between the airbag sensor assy center and the airbag front RH sensor.

(c) For the engine room main wire connector (on the airbag sensor assy center side) between the airbag sensor assy center and the airbag front RH sensor, measure the resistance between the +SR and –SR.

OK:

Resistance: Below 1 Ω

NG	REPAIR OR REPLACE ENGINE ROOM MAIN WIRE

OK

REPAIR OR REPLACE INSTRUMENT PANEL WIRE

DTC	B1158/16	FRONT AIRBAG SENSOR (LH) MALFUNCTION

DTC	B1159/16	FRONT AIRBAG SENSOR (LH) MALFUNCTION

CIRCUIT DESCRIPTION

The airbag sensor front LH circuit consists of the airbag sensor assy center and airbag sensor front LH. DTC B1158/B1159/16 is recorded when malfunction is detected in the airbag sensor front LH circuit.

DTC No.	DTC Detecting Condition	Trouble Area
B1158/B1159/16	• Airbag sensor front LH malfunction	• Airbag sensor front LH • Airbag sensor assy center • Instrument panel wire • Engine room main wire

WIRING DIAGRAM

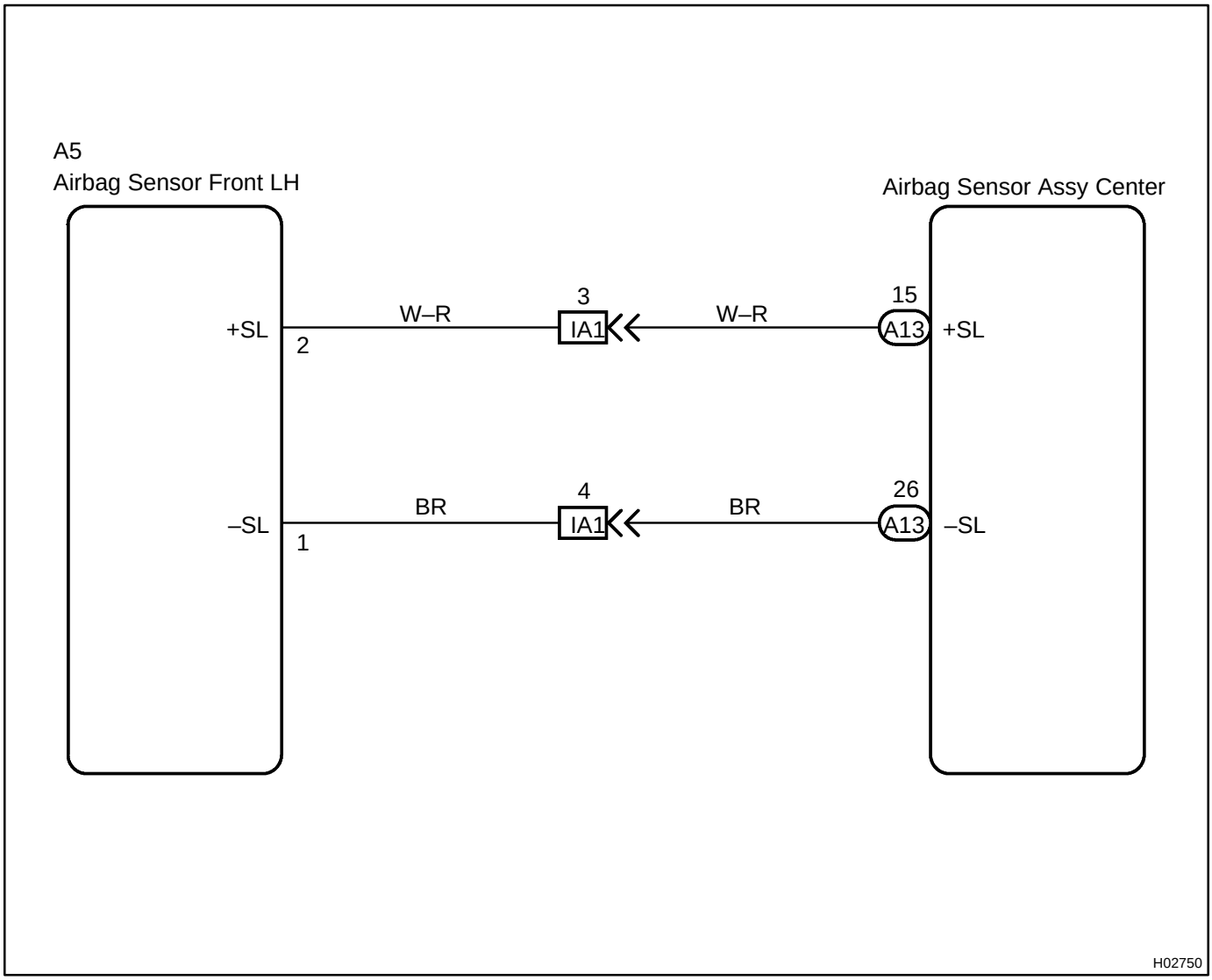

INSPECTION PROCEDURE

1	CHECK FRONT AIRBAG SENSOR (LH) CIRCUIT (TO B+)(AIRBAG SENSOR ASSY CENTER – AIRBAG SENSOR FRONT LH)

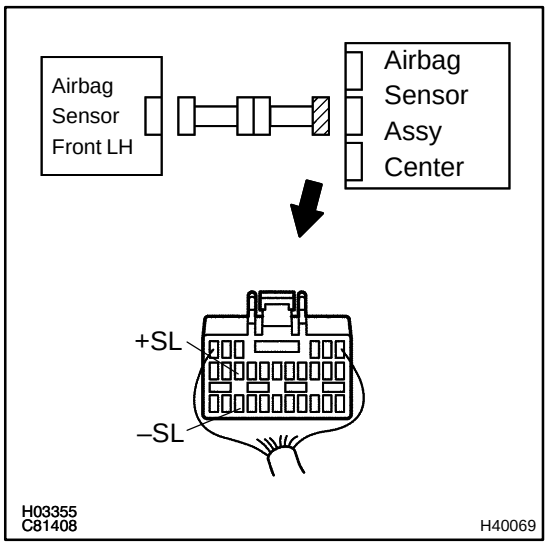

(a) Disconnect the negative (–) terminal cable from the battery, and wait at least for 90 seconds.
(b) Disconnect the connectors between the airbag sensor assy center and the airbag sensor front LH.
(c) Connect the negative (–) terminal cable to the battery, and wait at least for 2 seconds.
(d) Turn the ignition switch to ON.
(e) For the connector (on the airbag sensor assy center side) between the airbag sensor front LH and the airbag sensor assy center, measure the voltage between body ground and each of +SL and –SL.
OK:
Voltage: Below 1 V

NG → **Go to step 6**

OK

2	CHECK FRONT AIRBAG SENSOR(LH) CIRCUIT(TO GROUND)(AIRBAG SENSOR ASSY CENTER – AIRBAG SENSOR FRONT LH)

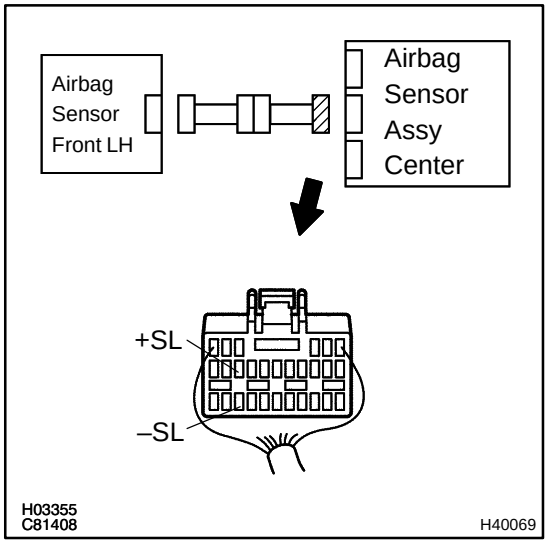

(a) Turn the ignition switch to LOCK.
(b) Disconnect the negative (–) terminal cable from the battery, and wait at least for 90 seconds.
(c) For the connector (on the airbag sensor assy center side) between the airbag sensor front LH and the airbag sensor assy center, measure the resistance between body ground and each of +SL and –SL.
OK:
Resistance: 1 MΩ or Higher

NG → **Go to step 7**

OK

3	CHECK FRONT AIRBAG SENSOR (LH) CIRCUIT(OPEN)(AIRBAG SENSOR ASSY CENTER – AIRBAG SENSOR FRONT LH)

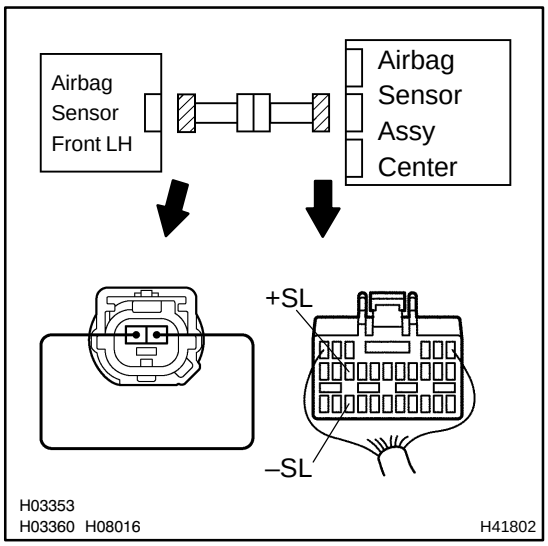

(a) Using a service wire, connect +SL and –SL of the connector (on the airbag sensor front LH side) between the airbag sensor assy center and the airbag sensor front LH.

(b) For the connector (on the airbag sensor assy center side) between the airbag sensor front LH and the airbag sensor assy center, measure the resistance between +SL and –SL.

OK:

Resistance: Below 1 Ω

NG → **Go to step 8**

OK

4	INSPECT AIR BAG SENSOR FRONT LH

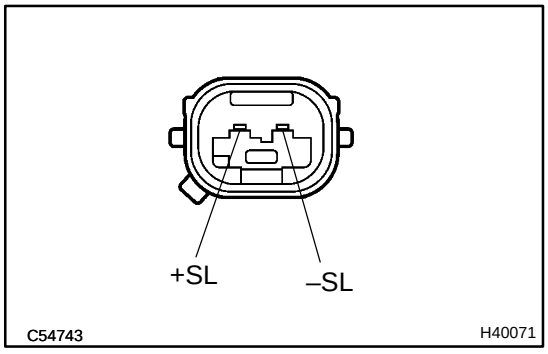

(a) For the connector of the airbag sensor front LH, measure the resistance between +SL and –SL.

OK:

Resistance: 820 Ω

NG → **REPLACE AIR BAG SENSOR FRONT LH**

OK

5 CHECK AIR BAG SENSOR ASSY CENTER

SST 09843–18040

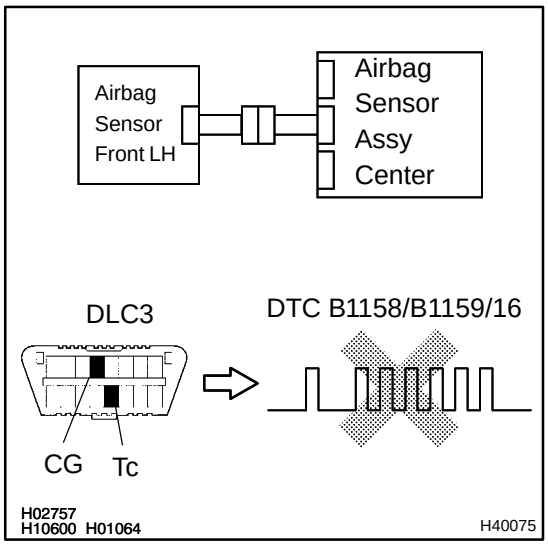

(a) Disconnect the negative (–) terminal cable from the battery, and wait at least for 90 seconds.
(b) Connect the airbag sensor front LH connector and airbag sensor assy center connector.
(c) Connect the negative (–) terminal cable to the battery, and wait at least for 2 seconds.
(d) Turn the ignition switch to ON, and wait at least for 20 seconds.
(e) Clear the DTC stored in memory (See page 05–424).
(f) Turn the ignition switch to LOCK, and wait at least for 20 seconds.
(g) Turn the ignition switch to ON, and wait at least for 20 seconds.
(h) Check the DTC (See page 05–424).

OK:

DTC B1158/B1159/16 is not output.

HINT:

Codes other than code B1158/B1159/16 may be output at this time, but they are not relevant to this check.

NG → **REPLACE AIR BAG SENSOR ASSY CENTER**

OK

USE SIMULATION METHOD TO CHECK

6	CHECK ENGINE ROOM MAIN WIRE HARNESS (TO B+)(CONECTOR – AIRBAG SENSOR FRONT LH)

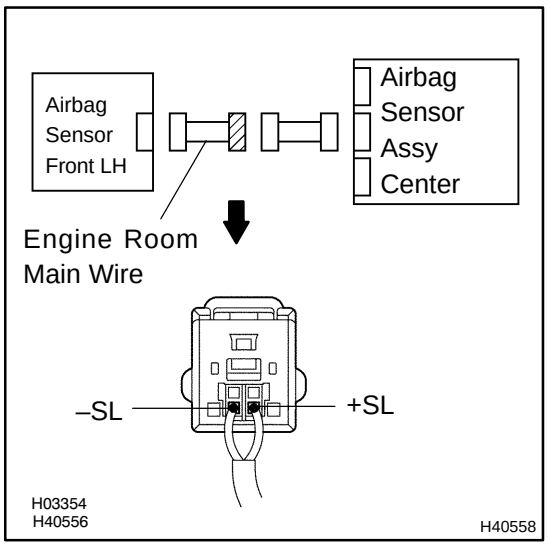

(a) Turn the ignition switch to LOCK.
(b) Disconnect the negative (–) terminal cable from the battery, and wait at least for 90 seconds.
(c) Disconnect the connector between the engine room main wire and the instrument panel wire.
(d) Connect the negative (–) terminal to the battery, and wait at least for 2 seconds.
(e) Turn the ignition switch to ON.
(f) For the engine room main wire connector (on the airbag sensor assy center side) between the airbag sensor assy center and the airbag sensor front LH, measure the voltage between body ground and each of +SL and –SL.
OK:
Voltage: Below 1 V

NG → **REPAIR OR REPLACE ENGINE ROOM MAIN WIRE**

OK

REPAIR OR REPLACE INSTRUMENT PANEL WIRE

7	CHECK ENGINE ROOM MAIN WIRE HARNESS (TO GROUND)(CONNECTOR – AIRBAG SENSOR FRONT LH)

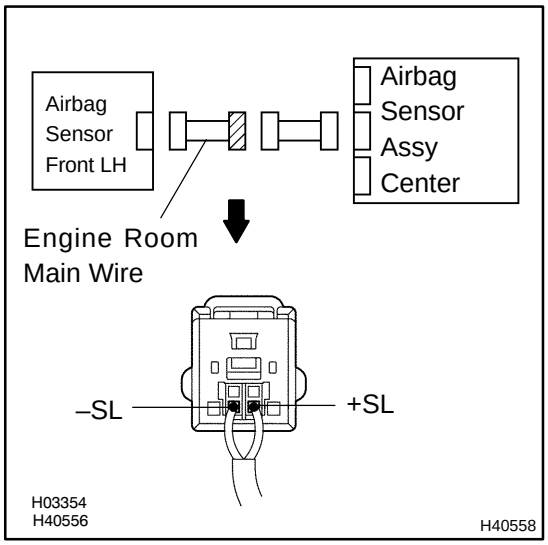

(a) Disconnect the connectors between the engine room main wire and the instrument panel wire.
(b) For the engine room main wire connector (on the airbag sensor assy center side) between the airbag sensor assy center and the airbag sensor front LH, measure the resistance between body ground and each of +SL and –SL.
OK:
Resistance: 1 MΩ or Higher

NG → **REPAIR OR REPLACE ENGINE ROOM MAIN WIRE**

OK

REPAIR OR REPLACE INSTRUMENT PANEL WIRE

8	CHECK ENGINE ROOM MAIN WIRE HARNESS(OPEN)(CONNECTOR – AIRBAG SENSOR FRONT LH)

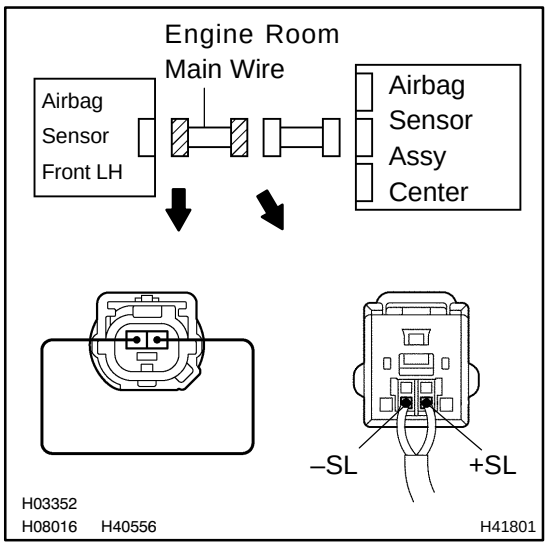

(a) Disconnect the connectors between the engine room main wire and the instrument panel wire.

(b) Using a service wire, connect +SL and –SL of the engine room main wire connector (on the airbag sensor front LH side) between the airbag sensor assy center and the airbag sensor front LH.

(c) For the engine room main wire connector (on the airbag sensor assy center side) between the airbag sensor assy center and the airbag sensor front LH, measure the resistance between +SL and –SL.

OK:

Resistance: Below 1 Ω

NG → **REPAIR OR REPLACE ENGINE ROOM MAIN WIRE**

OK

REPAIR OR REPLACE INSTRUMENT PANEL WIRE

DTC B1180/17 SHORT IN D SQUIB (2ND STEP) CIRCUIT

CIRCUIT DESCRIPTION

The D squib circuit consists of the airbag sensor assy center, spiral cable sub–assy and horn button assy. It causes the SRS to deploy when the SRS deployment conditions are satisfied.
DTC B1180/17 is recorded when a short is detected in the D squib circuit (2nd step).

DTC No.	DTC Detecting Condition	Trouble Area
B1180/17	• Short circuit between D2+ wire harness and D2– wire harness of squib (2nd step) • D squib (2nd step) malfunction • Spiral cable sub–assy malfunction • Airbag sensor assy center malfunction	• Horn button assy (D squib, 2nd step) • Spiral cable sub–assy • Airbag sensor assy center • Instrument panel wire

WIRING DIAGRAM

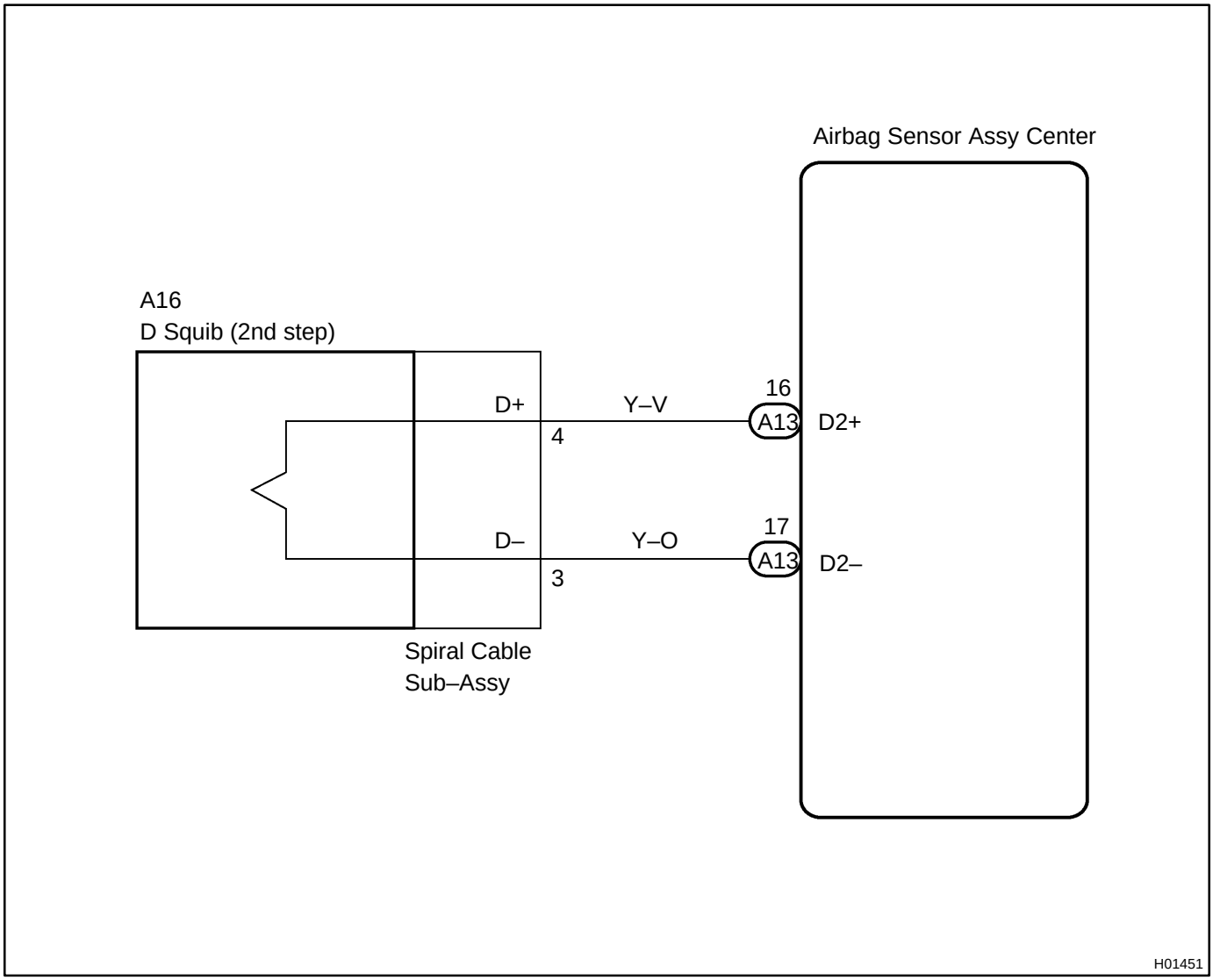

INSPECTION PROCEDURE

1	CHECK D SQUIB CIRCUIT(AIRBAG SENSOR ASSY CENTER – HORN BUTTON ASSY)

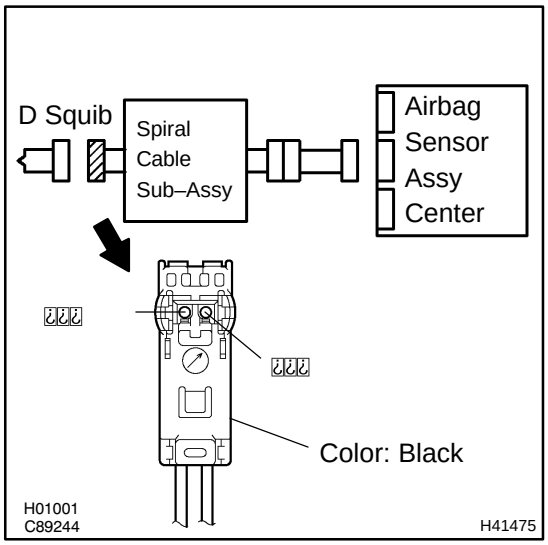

(a) Disconnect the negative (–) terminal cable from the battery, and wait at least for 90 seconds.
(b) Disconnect the connectors between the airbag sensor assy center and the horn button assy.
(c) Release the airbag activation prevention mechanism of the connector (on the airbag sensor assy center side) between the airbag sensor assy center and the spiral cable sub–assy (See page 05–424).
(d) For the black connector (on the spiral cable sub–assy side) between the horn button assy and the spiral cable sub–assy, measure the resistance between D2+ and D2–.
OK:
Resistance: 1 MΩ or Higher

NG → **Go to step 4**

OK

2	CHECK AIR BAG SENSOR ASSY CENTER

SST 09843–18040

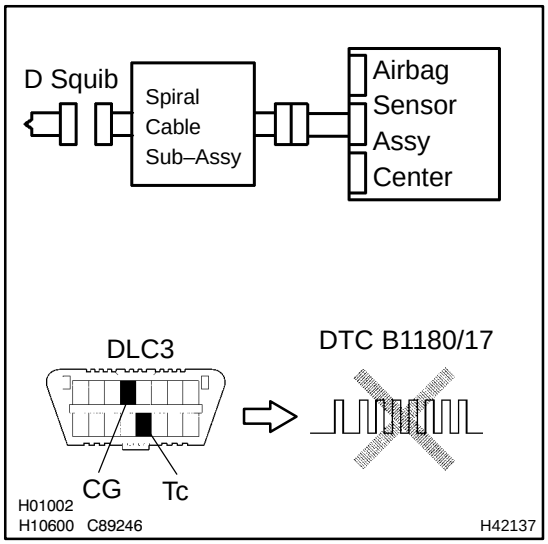

(a) Connect the connector to the airbag sensor assy center.
(b) Connect the negative (–) terminal cable to the battery, and wait at least for 2 seconds.
(c) Turn the ignition switch to ON, and wait at least for 20 seconds.
(d) Clear the DTC stored in memory (See page 05–424).
(e) Turn the ignition switch to LOCK, and wait at least for 20 seconds.
(f) Turn the ignition switch to ON, and wait at least for 20 seconds.
(g) Check the DTC (See page 05–424).
OK:
DTC B1180/17 is not output.

HINT:
Codes other than code B1180/17 may be output at this time, but they are not relevant to this check.

NG → **REPLACE AIR BAG SENSOR ASSY CENTER**

OK

3 CHECK D SQUIB

SST 09843–18040

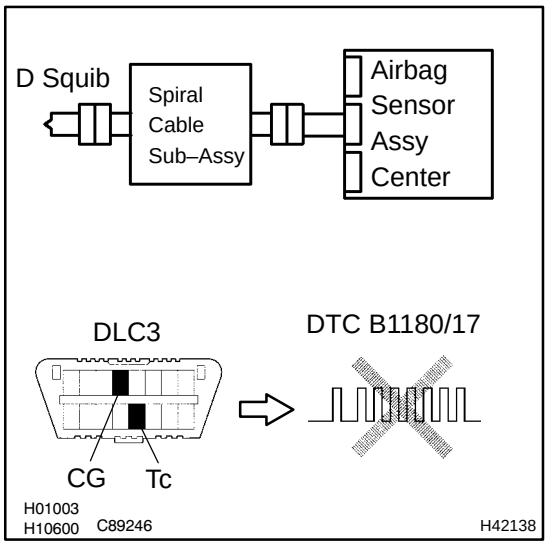

(a) Turn the ignition switch to LOCK.
(b) Disconnect the negative (–) terminal cable from the battery, and wait at least for 90 seconds.
(c) Connect the horn button assy connectors.
(d) Connect the negative (–) terminal cable to the battery, and wait at least for 2 seconds.
(e) Turn the ignition switch to ON, and wait at least for 20 seconds.
(f) Clear the DTC stored in memory (See page 05–424).
(g) Turn the ignition switch to LOCK, and wait at least for 20 seconds.
(h) Turn the ignition switch to ON, and wait at least for 20 seconds.
(i) Check the DTC (See page 05–424).

OK:

DTC B1180/17 is not output.

HINT:

Codes other than code B1180/17 may be output at this time, but they are not relevant to this check.

NG → **REPLACE HORN BUTTON ASSY**

OK

USE SIMULATION METHOD TO CHECK

4 CHECK INSTRUMENT PANEL WIRE(AIRBAG SENSOR ASSY CENTER – SPIRAL CABLE SUB–ASSY)

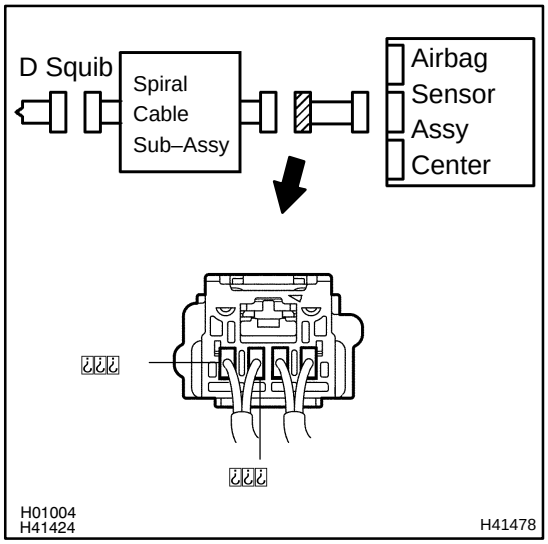

(a) Disconnect the connector of the instrument panel wire.
(b) Release the airbag activation prevention mechanism of the connector (on the airbag sensor assy center side) between the airbag sensor assy center and the spiral cable sub–assy (See page 05–424).
(c) For the connector (on the spiral cable sub–assy side) between the airbag sensor assy center and the spiral cable sub–assy, measure the resistance between D2+ and D2–.

OK:

Resistance: 1 MΩ or Higher

NG → **REPAIR OR REPLACE INSTRUMENT PANEL WIRE(AIRBAG SENSOR ASSY CENTER – SPIRAL CABLE SUB–ASSY)**

OK

5	CHECK SPIRAL CABLE SUB–ASSY

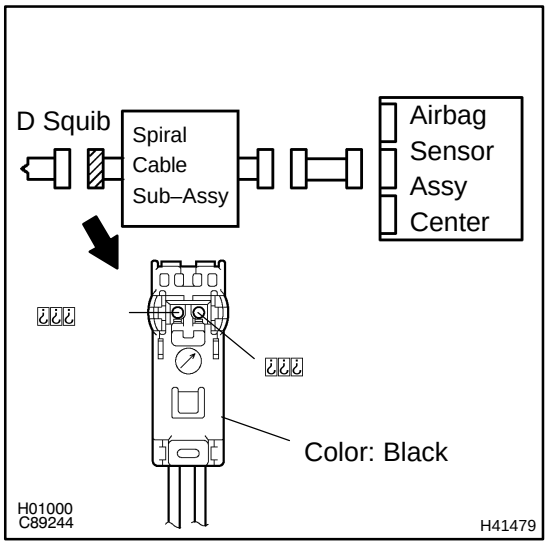

(a) Release the airbag activation prevention mechanism of the spiral cable sub–assy connector on the airbag sensor assy center side (See page 05–424).

(b) For the black connector (on the spiral cable sub–assy side) between the horn button assy and the spiral cable sub–assy, measure the resistance between D2+ and D2–.

OK:

Resistance: 1 MΩ or Higher

NG → **REPLACE SPIRAL CABLE SUB–ASSY**

OK

USE SIMULATION METHOD TO CHECK

DTC B1181/18 OPEN IN D SQUIB (2ND STEP) CIRCUIT

CIRCUIT DESCRIPTION

The D squib circuit consists of the airbag sensor assy center, spiral cable sub–assy and horn button assy. It causes the SRS to deploy when the SRS deployment conditions are satisfied.
DTC B1181/18 is recorded when an open is detected in the D squib circuit (2nd step).

DTC No.	DTC Detecting Condition	Trouble Area
B1181/18	• Open circuit in D+ wire harness or D– wire harness of squib • D squib (2nd step) malfunction • Spiral cable sub–assy malfunction • Airbag sensor assy center malfunction	• Horn button assy (D squib, 2nd step) • Spiral cable sub–assy • Airbag sensor assy center • Instrument panel wire

WIRING DIAGRAM

See page 05–554.

INSPECTION PROCEDURE

1	CHECK D SQUIB CIRCUIT(AIRBAG SENSOR ASSY CENTER – HORN BUTTON ASSY)

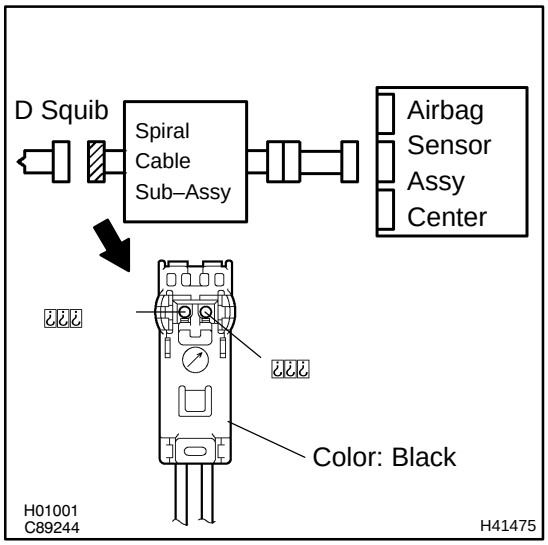

(a) Disconnect the negative (–) terminal cable from the battery, and wait at least for 90 seconds.
(b) Disconnect the connectors between the horn button assy and the airbag sensor assy center.
(c) For the black connector (on the spiral cable sub–assy side) between the horn button assy and the spiral cable sub–assy, measure the resistance between D2+ and D2–.
OK:
Resistance: Below 1 Ω

NG → **Go to step 4**

OK

2 CHECK AIR BAG SENSOR ASSY CENTER

SST 09843–18040

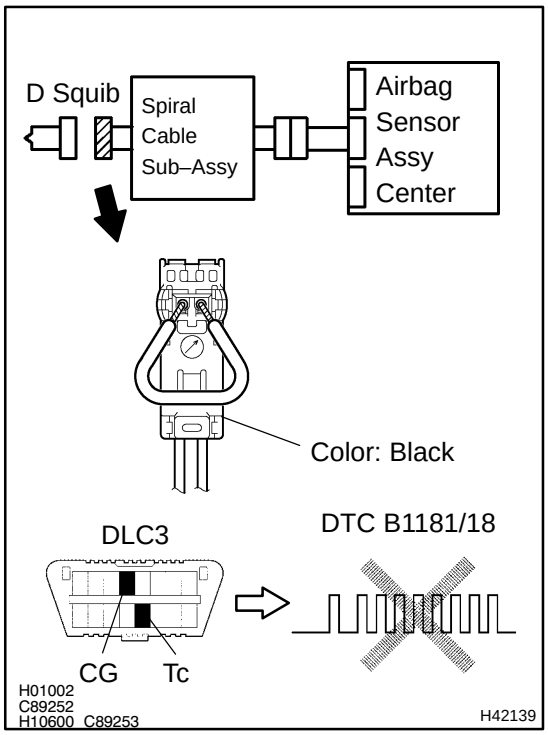

(a) Connect the connector to the airbag sensor assy center.
(b) Using a service wire, connect D2+ and D2– of the black connector (on the spiral cable sub–assy side) between the horn button assy and the spiral cable sub–assy.
(c) Connect the negative (–) terminal cable to the battery, and wait at least for 2 seconds.
(d) Turn the ignition switch to ON, and wait at least for 20 seconds.
(e) Clear the DTC stored in memory (See page 05–424).
(f) Turn the ignition switch to LOCK, and wait at least for 20 seconds.
(g) Turn the ignition switch to ON, and wait at least for 20 seconds.
(h) Check the DTC (See page 05–424).

OK:

DTC B1181/18 is not output.

HINT:

Codes other than code B1181/18 may be output at this time, but they are not relevant to this check.

NG → **REPLACE AIR BAG SENSOR ASSY CENTER**

OK

3 CHECK D SQUIB

SST 09843–18040

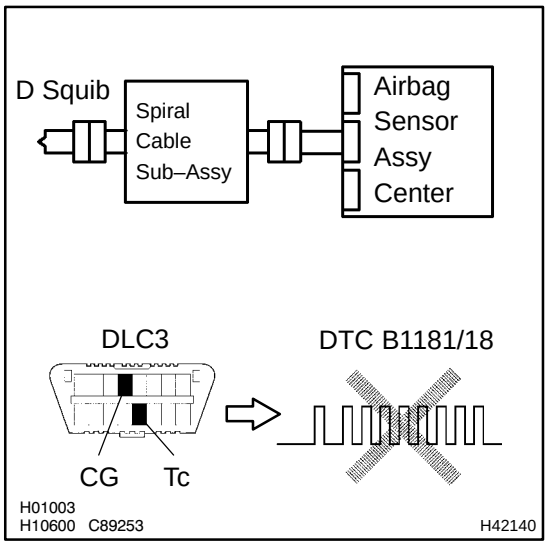

(a) Turn the ignition switch to LOCK.
(b) Disconnect the negative (–) terminal cable from the battery, and wait at least for 90 seconds.
(c) Connect the horn button assy connectors.
(d) Connect the negative (–) terminal cable to the battery, and wait at least for 2 seconds.
(e) Turn the ignition switch to ON, and wait at least for 20 seconds.
(f) Clear the DTC stored in memory (See page 05–424).
(g) Turn the ignition switch to LOCK, and wait at least for 20 seconds.
(h) Turn the ignition switch to ON, and wait at least for 20 seconds.
(i) Check the DTC (See page 05–424).

OK:

DTC B1181/18 is not output.

HINT:

Codes other than code B1181/18 may be output at this time, but they are not relevant to this check.

NG → **REPLACE HORN BUTTON ASSY**

OK

USE SIMULATION METHOD TO CHECK

4 CHECK INSTRUMENT PANEL WIRE(AIRBAG SENSOR ASSY CENTER – SPIRAL CABLE SUB–ASSY)

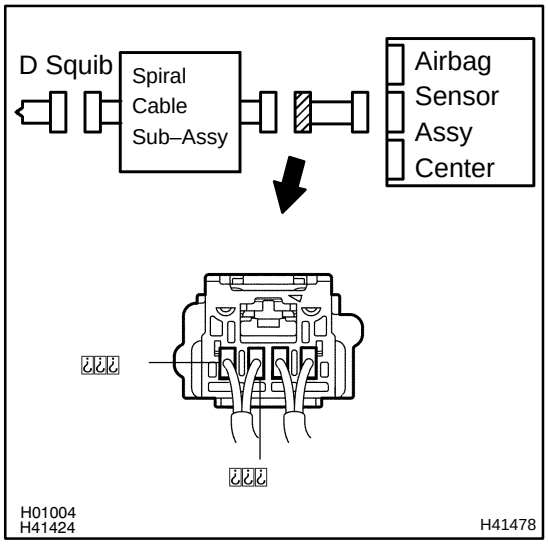

(a) Disconnect the connector of the instrument panel wire.
(b) For the connector (on the spiral cable sub–assy side) between the airbag sensor assy center and the spiral cable sub–assy, measure the resistance between D2+ and D2–.

OK:

Resistance: Below 1 Ω

NG → **REPAIR OR REPLACE INSTRUMENT PANEL WIRE(AIRBAG SENSOR ASSY CENTER – SPIRAL CABLE SUB–ASSY)**

OK

5	CHECK SPIRAL CABLE SUB–ASSY

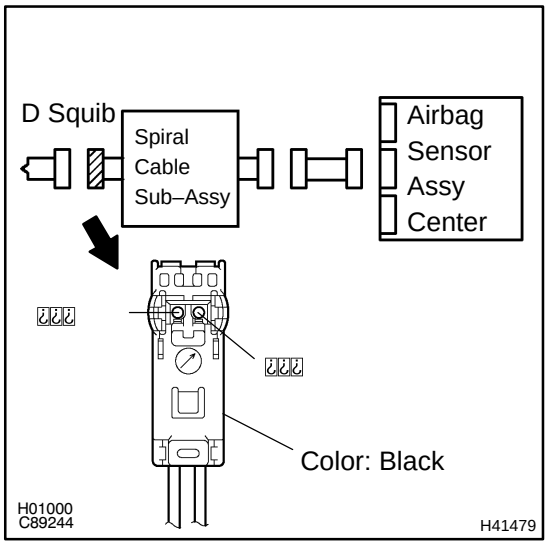

(a) For the black connector (on the spiral cable sub–assy side) between the horn button assy and the spiral cable sub–assy, measure the resistance between D2+ and D2–.

OK:

Resistance: Below 1 Ω

NG → **REPLACE SPIRAL CABLE SUB–ASSY**

OK

USE SIMULATION METHOD TO CHECK

DTC	B1182/19	SHORT IN D SQUIB (2ND STEP) CIRCUIT (TO GROUND)

CIRCUIT DESCRIPTION

The D squib (2nd step) circuit consists of the airbag sensor assy center, spiral cable sub–assy and horn button assy.
It causes the SRS to deploy when the SRS deployment conditions are satisfied.
DTC B1182/19 is recorded when a ground short is detected in the D squib (2nd step) circuit.

DTC No.	DTC Detecting Condition	Trouble Area
B1182/19	• Short circuit in D squib (2nd step) wire harness (to ground) • D squib (2nd step) malfunction • Spiral cable sub–assy malfunction • Airbag sensor assy center malfunction	• Horn button assy (D squib, 2nd step) • Spiral cable sub–assy • Airbag sensor assy center • Instrument panel wire

WIRING DIAGRAM

See page 05–554.

INSPECTION PROCEDURE

1	CHECK D SQUIB CIRCUIT(AIRBAG SENSOR ASSY CENTER – HORN BUTTON ASSY)

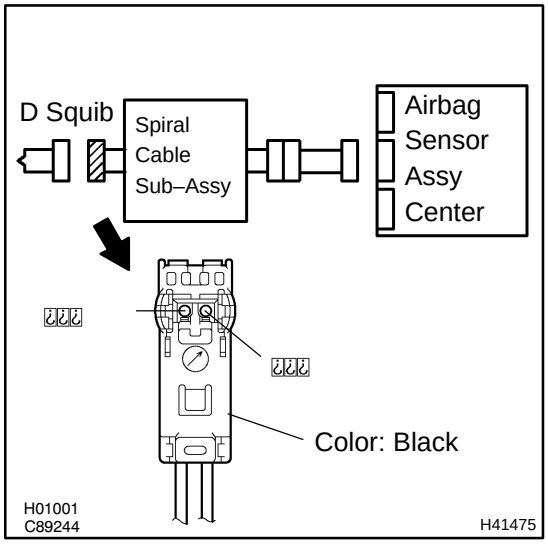

(a) Disconnect the negative (–) terminal cable from the battery, and wait at least for 90 seconds.
(b) Disconnect the connector between the airbag sensor assy center and the horn button assy.
(c) For the black connector (on the spiral cable sub–assy side) between the horn button assy and the spiral cable sub–assy, measure the resistance between D2+ and body ground.
OK:
Resistance: 1 MΩ or Higher

NG → **Go to step 5**

OK

2 CHECK AIR BAG SENSOR ASSY CENTER

SST 09843–18040

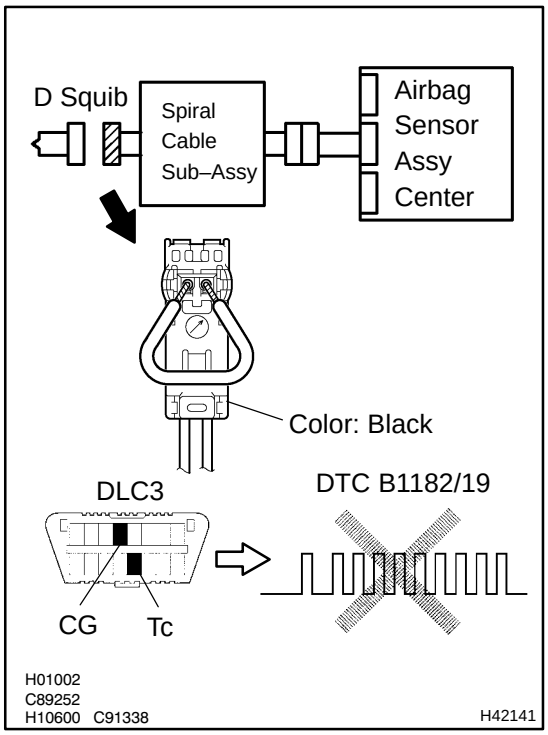

(a) Connect the connector to the airbag sensor assy center.
(b) Using a service wire, connect D2+ and D2– of the black connector (on the spiral cable sub–assy side) between the horn button assy and the spiral cable sub–assy.
(c) Connect the negative (–) terminal cable to the battery, and wait at least for 2 seconds.
(d) Turn the ignition switch to ON, and wait t least for 20 seconds.
(e) Clear the DTC stored in memory (See page 05–424).
(f) Turn the ignition switch to LOCK, and wait at least for 20 seconds.
(g) Turn the ignition switch to ON, and wait at least for 20 seconds.
(h) Check the DTC (See page 05–424).

OK:

DTC B1182/19 is not output.

HINT:

Codes other than code B1182/19 may be output at this time, but they are not relevant to this check.

NG → **REPLACE AIR BAG SENSOR ASSY CENTER**

OK

3	CHECK D SQUIB

SST 09843–18040

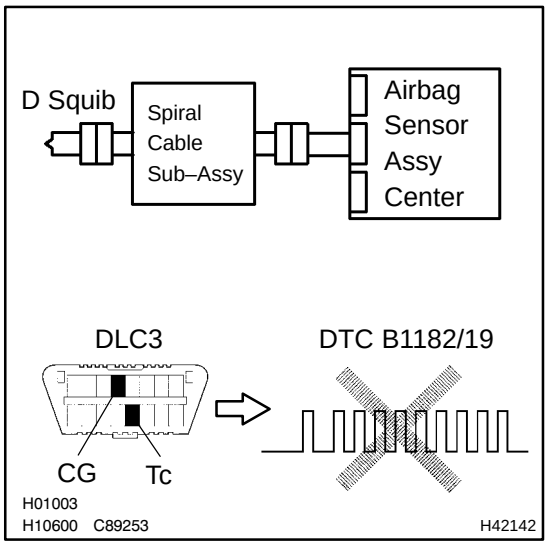

(a) Turn the ignition switch to LOCK.
(b) Disconnect the negative (–) terminal cable from the battery, and wait at least for 90 seconds.
(c) Connect the horn button assy connectors.
(d) Connect the negative (–) terminal cable to the battery, and wait at least for 2 seconds.
(e) Turn the ignition switch to ON, and wait at least for 20 seconds.
(f) Clear the DTC stored in memory (See page 05–424).
(g) Turn the ignition switch to LOCK, and wait at least for 20 seconds.
(h) Turn the ignition switch to ON, and wait at least for 20 seconds.
(i) Check the DTC (See page 05–424).

OK:

DTC B1182/19 is not output.

HINT:

Codes other than code B1182/19 may be output at this time, but they are not relevant to this check.

NG → **REPLACE HORN BUTTON ASSY**

OK

4	USE SIMULATION METHOD TO CHECK

NG → **Go to step 1**

OK

REPLACE ALL SRS COMPONENTS INCLUDING THE WIRE HARNESS

5	CHECK INSTRUMENT PANEL WIRE(AIRBAG SENSOR ASSY CENTER – SPIRAL CABLE SUB–ASSY)

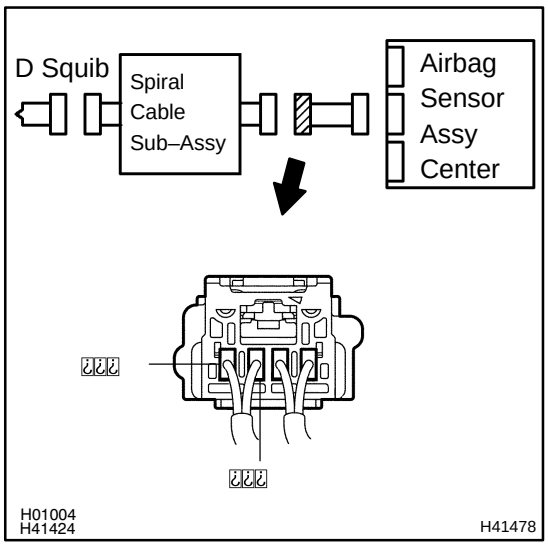

(a) Disconnect the connector of the instrument panel wire.
(b) For the connector (on the spiral cable sub–assy side) between the airbag sensor assy center and the spiral cable sub–assy, measure the resistance between D2+ and body ground.
OK:
Resistance: 1 MΩ or Higher

NG → **REPAIR OR REPLACE INSTRUMENT PANEL WIRE(AIRBAG SENSOR ASSY CENTER – SPIRAL CABLE SUB–ASSY)**

OK

6	CHECK SPIRAL CABLE SUB–ASSY

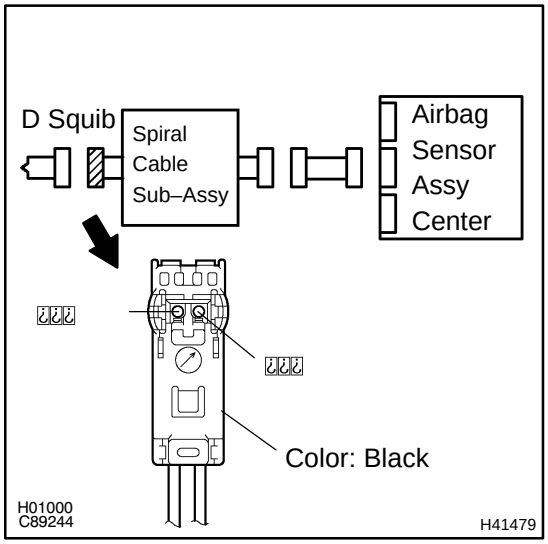

(a) For the black connector (on the spiral cable sub–assy side) between the horn button assy and the spiral cable sub–assy, measure the resistance between D2+ and body ground.
OK:
Resistance: 1 MΩ or Higher

NG → **REPLACE SPIRAL CABLE SUB–ASSY**

OK

7	USE SIMULATION METHOD TO CHECK

NG → **Go to step 1**

OK

REPLACE ALL SRS COMPONENTS INCLUDING THE WIRE HARNESS

DTC	B1183/22	SHORT IN D SQUIB (2ND STEP) CIRCUIT (TO B+)

CIRCUIT DESCRIPTION

The D squib (2nd step) circuit consists of the airbag sensor assy center, spiral cable sub–assy and horn button assy.
It causes the SRS to deploy when the SRS deployment conditions are satisfied.
DTC B1183/22 is recorded when a B+ short is detected in the D squib (2nd step) circuit.

DTC No.	DTC Detecting Condition	Trouble Area
B1183/22	• Short circuit in D squib (2nd step) wire harness (to B+) • D squib (2nd step) malfunction • Spiral cable sub–assy malfunction • Airbag sensor assy center malfunction	• Horn button assy (D squib, 2nd step) • Spiral cable sub–assy • Airbag sensor assy center • Instrument panel wire

WIRING DIAGRAM

See page 05–424.

CIRCUIT INSPECTION

1	CHECK D SQUIB CIRCUIT(AIRBAG SENSOR ASSY CENTER – HORN BUTTON ASSY)

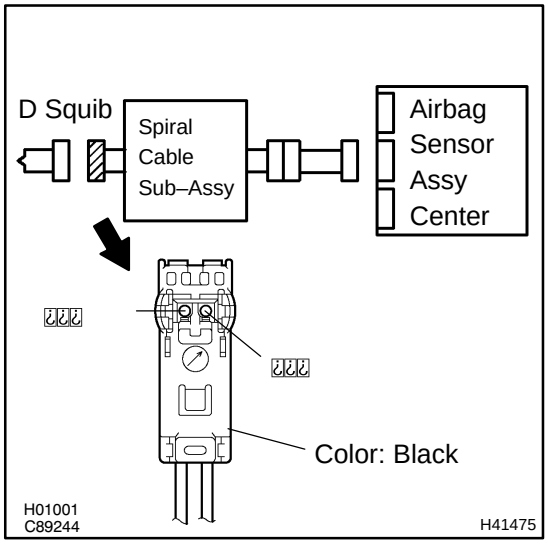

(a) Disconnect the negative (–) terminal cable from the battery, and wait at least for 90 seconds.
(b) Disconnect the connectors between the airbag sensor assy center and the horn button assy.
(c) Connect the negative (–) terminal cable to the battery, and wait at least for 2 seconds.
(d) Turn the ignition switch to ON.
(e) For the black connector (on the spiral cable sub–assy side) between the horn button assy and the spiral cable sub–assy, measure the voltage between D2+ and body ground.
OK:
Voltage: Below 1 V

NG → **Go to step 5**

OK

2 CHECK AIR BAG SENSOR ASSY CENTER

SST 09843–18040

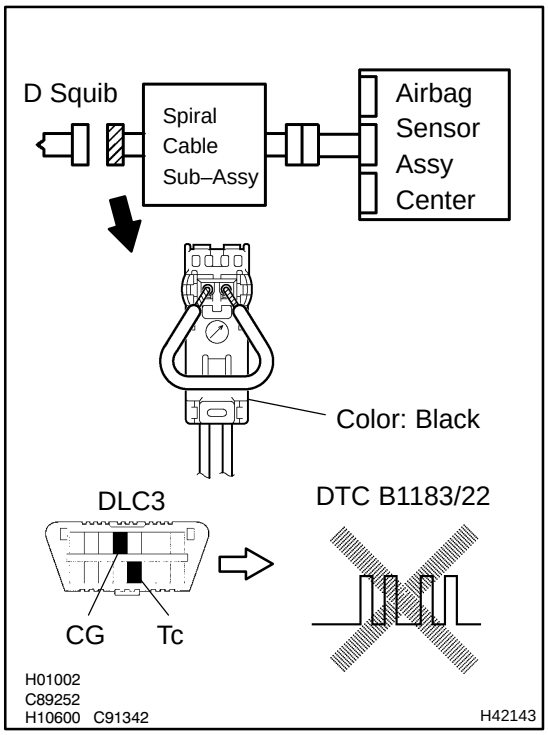

(a) Turn the ignition switch to LOCK.
(b) Disconnect the negative (–) terminal cable from the battery, and wait at least for 90 seconds.
(c) Connect the connector to the airbag sensor assy center.
(d) Using a service wire, connect D2+ and D2– of the black connector (on the spiral cable sub–assy side) between the horn button assy and the spiral cable sub–assy.
(e) Connect the negative (–) terminal cable to the battery, and wait at least for 2 seconds.
(f) Turn the ignition switch to ON, and wait at least for 20 seconds.
(g) Clear the DTC stored in memory (See page 05–424).
(h) Turn the ignition switch to LOCK, and wait at least for 20 seconds.
(i) Turn the ignition switch to ON, and wait at least for 20 seconds.
(j) Check the DTC (See page 05–424).

OK:

DTC B1183/22 is not output.

HINT:

Codes other than code B1183/22 may be output at this time, but they are not relevant to this check.

NG → **REPLACE AIR BAG SENSOR ASSY CENTER**

OK

3 CHECK D SQUIB

SST 09843–18040

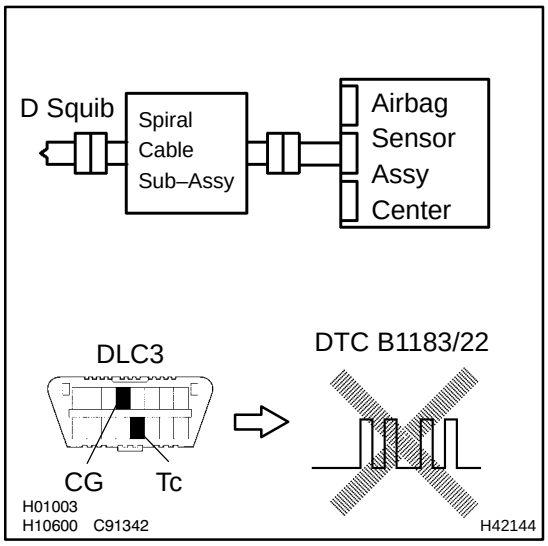

(a) Turn the ignition switch to LOCK.
(b) Disconnect the negative (–) terminal cable from the battery, and wait at least for 90 seconds.
(c) Connect the horn button assy connectors.
(d) Connect the negative (–) terminal cable to the battery, and wait at least for 2 seconds.
(e) Turn the ignition switch to ON, and wait at least for 20 seconds.
(f) Clear the DTC stored in memory (See page 05–424).
(g) Turn the ignition switch to LOCK, and wait at least for 20 seconds.
(h) Turn the ignition switch to ON, and wait at least for 20 seconds.
(i) Check the DTC (See page 05–424).

OK:

DTC B1183/22 is not output.

HINT:

Codes other than code B1183/22 may be output at this time, but they are not relevant to this check.

NG → **REPLACE HORN BUTTON ASSY**

OK

4 USE SIMULATION METHOD TO CHECK

NG → **Go to step 1**

OK

REPLACE ALL SRS COMPONENTS INCLUDING THE WIRE HARNESS

5	CHECK INSTRUMENT PANEL WIRE(AIRBAG SENSOR ASSY CENTER – SPIRAL CABLE SUB–ASSY)

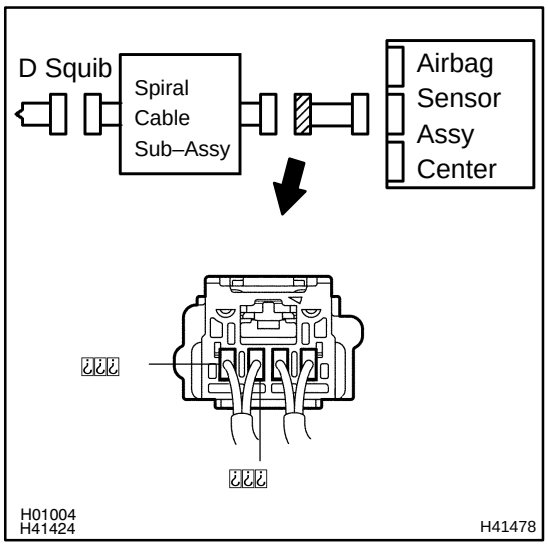

(a) Turn the ignition switch to LOCK.
(b) Disconnect the connector of the instrument panel wire.
(c) Turn the ignition switch to ON.
(d) For the connector (on the spiral cable sub–assy side) between the horn button assy and the spiral cable sub–assy, measure the voltage between D2+ and body ground.
OK:
Voltage: Below 1 V

NG → **REPAIR OR REPLACE INSTRUMENT PANEL WIRE(AIRBAG SENSOR ASSY CENTER – SPIRAL CABLE SUB–ASSY)**

OK

6	CHECK SPIRAL CABLE SUB–ASSY

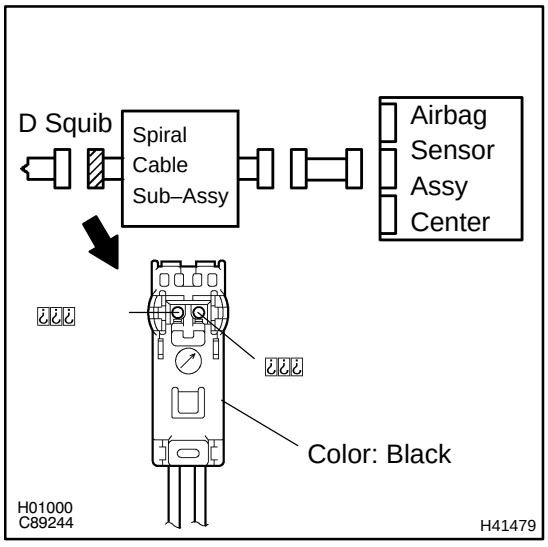

(a) For the black connector (on the spiral cable sub–assy side) between the horn button assy and the spiral cable sub–assy, measure the voltage between D2+ and body ground.
OK:
Voltage: Below 1 V

NG → **REPLACE SPIRAL CABLE SUB–ASSY**

OK

7	USE SIMULATION METHOD TO CHECK

NG → **Go to step 1**

OK

REPLACE ALL SRS COMPONENTS INCLUDING THE WIRE HARNESS

DTC B1185/57 SHORT IN P SQUIB (2ND STEP) CIRCUIT

CIRCUIT DESCRIPTION

The P squib (2nd step) circuit consists of the airbag sensor assy center and instrument panel passenger airbag assy.
It causes the SRS to deploy when the SRS deployment conditions are satisfied.
DTC B1185/57 is recorded when a short is detected in the P squib (2nd step) circuit.

DTC No.	DTC Detecting Condition	Trouble Area
B1185/57	• Short circuit between P2+ wire harness and P2– wire harness of squib. • P squib (2nd step) malfunction • Airbag sensor assy center malfunction	• Instrument panel passenger airbag assy (P squib, 2nd step) • Airbag sensor assy center • Instrument panel wire

WIRING DIAGRAM

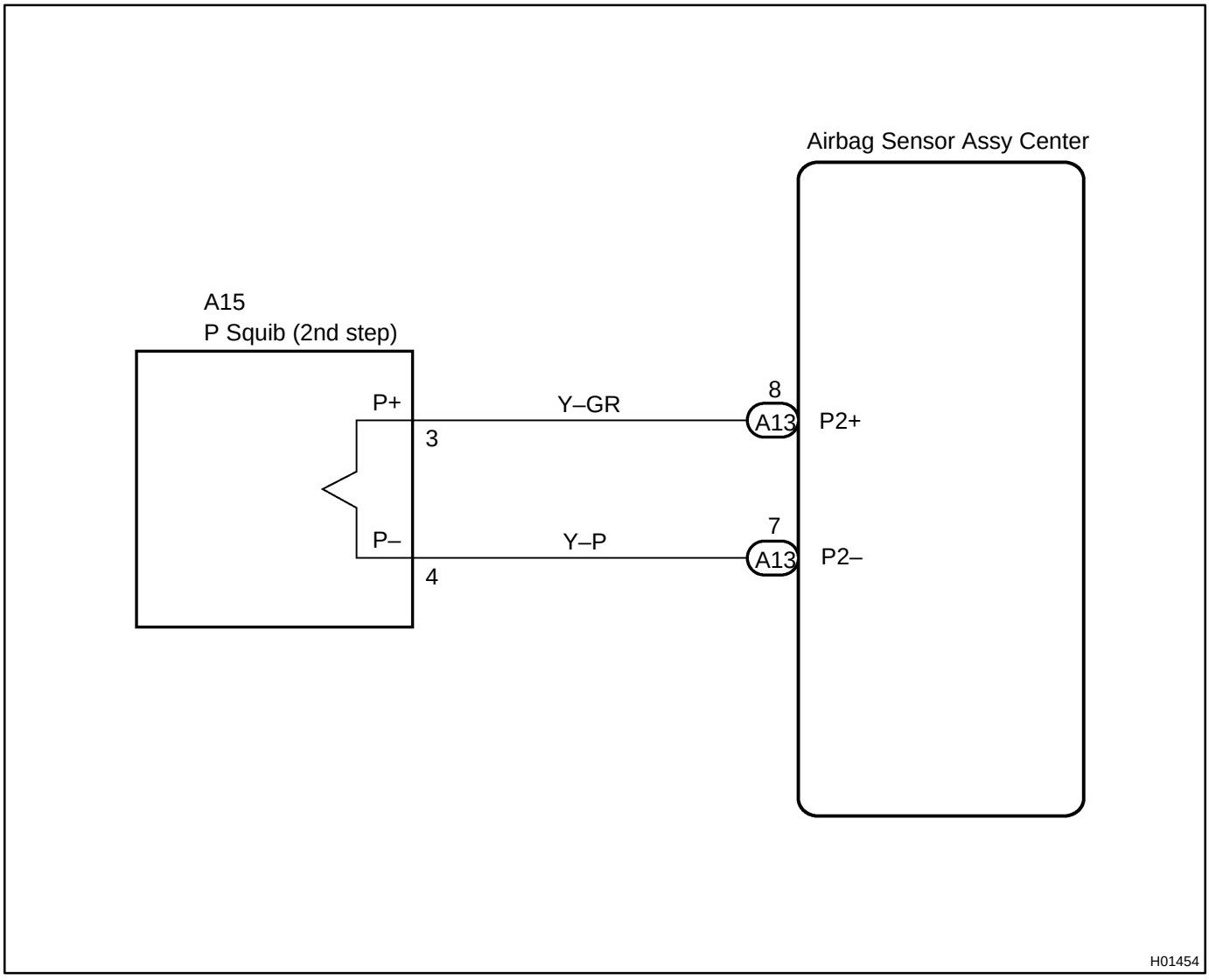

INSPECTION PROCEDURE

1	CHECK P SQUIB CIRCUIT(AIRBAG SENSOR ASSY CENTER – INSTRUMENT PANEL PASSENGER AIRBAG ASSY)

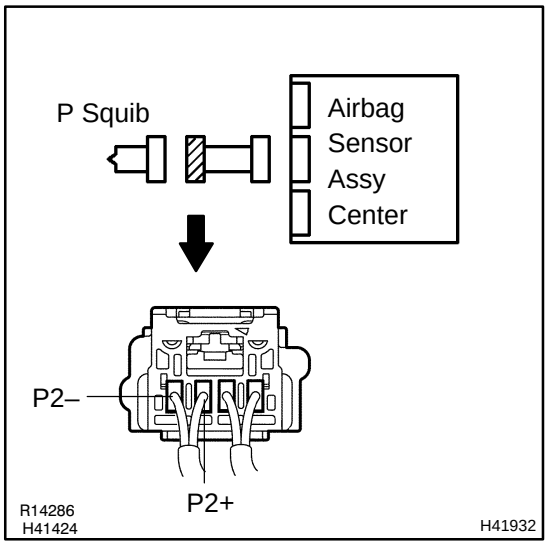

(a) Disconnect the negative (–) terminal cable from the battery, and wait at least for 90 seconds.
(b) Disconnect the connectors between the airbag sensor assy center and the instrument panel passenger airbag assy.
(c) Release the airbag activation prevention mechanism of the connector (on the airbag sensor assy center side) between the airbag sensor assy center and the instrument panel passenger airbag assy (See page 05–424).
(d) For the connector (on the instrument panel passenger airbag assy side) between the airbag sensor assy center and the instrument panel passenger airbag assy, measure the resistance between P2+ and P2–.
OK:
Resistance: 1 MΩ or Higher

NG	REPAIR OR REPLACE INSTRUMENT PANEL WIRE

OK

2	CHECK AIR BAG SENSOR ASSY CENTER

SST 09843–18040

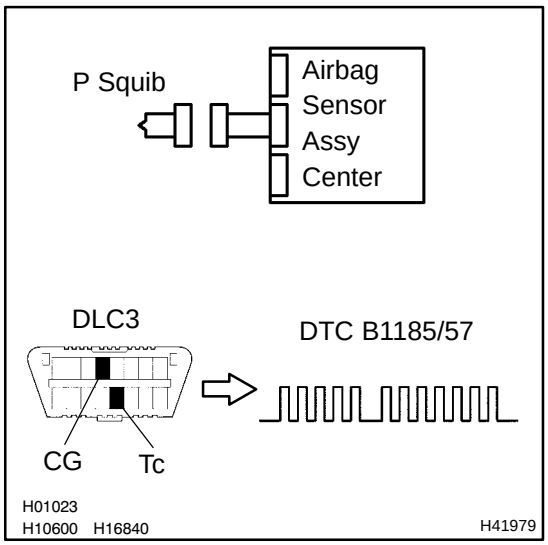

(a) Connect the connector to the airbag sensor assy center.
(b) Connect the negative (–) terminal cable to the battery, and wait at least for 2 seconds.
(c) Turn the ignition switch to ON, and wait at least for 20 seconds.
(d) Clear the DTC stored in memory (See page 05–424).
(e) Turn the ignition switch to LOCK, and wait at least for 20 seconds.
(f) Turn the ignition switch to ON, and wait at least for 20 seconds.
(g) Check the DTC (See page 05–424).
OK:
DTC B1185/57 is not output.

HINT:
Codes other than code B1185/57 may be output at this time, but they are not relevant to this check.

NG	REPLACE AIR BAG SENSOR ASSY CENTER

OK

3 CHECK P SQUIB

SST 09843–18040

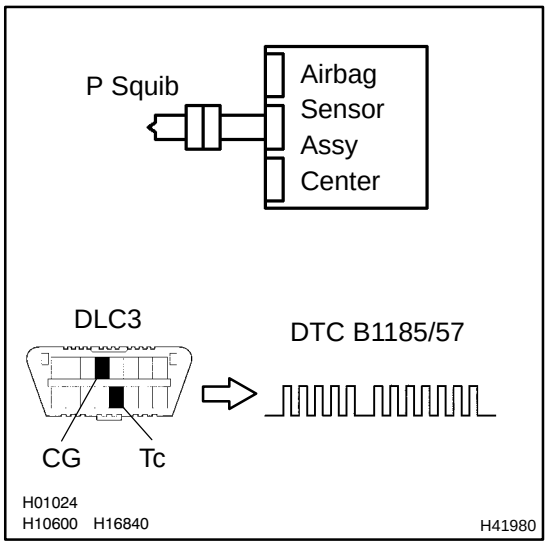

(a) Turn the ignition switch to LOCK.
(b) Disconnect the negative (–) terminal cable from the battery, and wait at least for 90 seconds.
(c) Connect the instrument panel passenger airbag assy connector.
(d) Connect the negative (–) terminal cable to the battery, and wait at least for 2 seconds.
(e) Turn the ignition switch to ON, and wait at least for 20 seconds.
(f) Clear the DTC stored in memory (See page 05–424).
(g) Turn the ignition switch to LOCK, and wait at least for 20 seconds.
(h) Turn the ignition switch to ON, and wait at least for 20 seconds.
(i) Check the DTC (See page 05–424).

OK:

DTC B1185/57 is not output.

HINT:

Codes other than code B1185/57 may be output at this time, but they are not relevant to this check.

NG → **REPLACE INSTRUMENT PANEL PASSENGER AIR BAG ASSY**

OK

USE SIMULATION METHOD TO CHECK

DTC B1186/58 OPEN IN P SQUIB (2ND STEP) CIRCUIT

CIRCUIT DESCRIPTION

The P squib (2nd step) circuit consists of the airbag sensor assy center and instrument panel passenger airbag assy.
It causes the SRS to deploy when the SRS deployment conditions are satisfied.
DTC B1186/58 is recorded when an open is detected in the P squib circuit.

DTC No.	DTC Detecting Condition	Trouble Area
B1186/58	• Open circuit in P2+ wire harness or P2– wire harness of squib (2nd step) • P squib (2nd step) malfunction • Airbag sensor assy center malfunction	• Instrument panel passenger airbag assy (P squib, 2nd step) • Airbag sensor assy center • Instrument panel wire

WIRING DIAGRAM

See page 05–570.

INSPECTION PROCEDURE

1	CHECK P SQUIB CIRCUIT(AIRBAG SENSOR ASSY CENTER – INSTRUMENT PANEL PASSENGER AIRBAG ASSY)

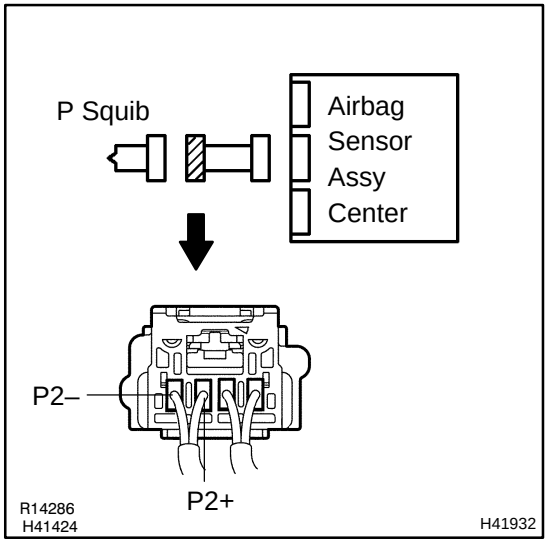

(a) Disconnect the negative (–) terminal cable from the battery, and wait at least for 90 seconds.
(b) Disconnect the connectors between the airbag sensor assy center and the instrument panel passenger airbag assy.
(c) For the connector (on the instrument panel passenger airbag assy side) between the airbag sensor assy center and the instrument panel passenger airbag assy, measure the resistance between P2+ and P2–.
OK:
Resistance: Below 1 Ω

NG → **REPAIR OR REPLACE INSTRUMENT PANEL WIRE**

OK

2 CHECK AIR BAG SENSOR ASSY CENTER

SST 09843–18040

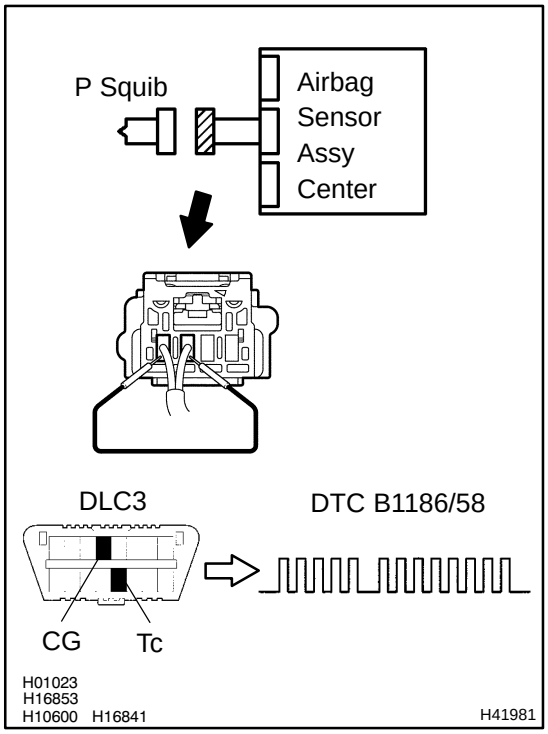

(a) Connect the connector to the airbag sensor assy center.
(b) Using a service wire, connect P2+ and P2– of the connector (on the instrument panel passenger airbag assy side) between the airbag sensor assy center and the instrument panel passenger airbag assy.
(c) Connect the negative (–) terminal cable to the battery, and wait at least for 2 seconds.
(d) Turn the ignition switch to ON, and wait at least for 20 seconds.
(e) Clear the DTC stored in memory (See page 05–424).
(f) Turn the ignition switch to LOCK, and wait at least for 20 seconds.
(g) Turn the ignition switch to ON, and wait at least for 20 seconds.
(h) Check the DTC (See page 05–424).

OK:

DTC B1186/58 is not output.

HINT:

Codes other than code B1186/58 may be output at this time, but they are not relevant to this check.

NG → **REPLACE AIR BAG SENSOR ASSY CENTER**

OK

3 CHECK P SQUIB

SST 09843–18040

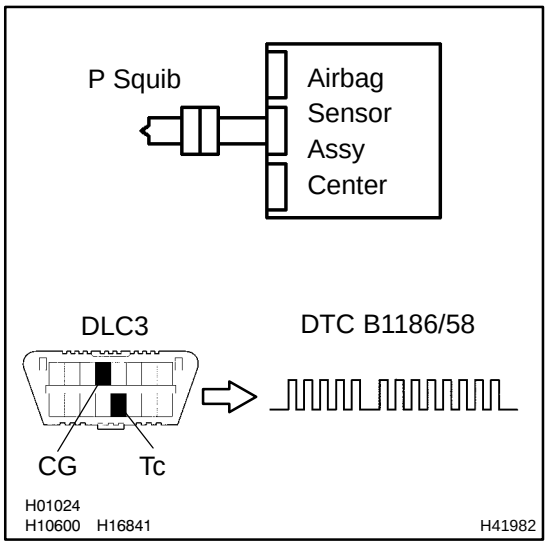

(a) Turn the ignition switch to LOCK.
(b) Disconnect the negative (–) terminal cable from the battery, and wait at least for 90 seconds.
(c) Connect the instrument panel passenger airbag assy connector.
(d) Connect the negative (–) terminal cable to the battery, and wait at least for 2 seconds.
(e) Turn the ignition switch to ON, and wait at least for 20 seconds.
(f) Clear the DTC stored in memory (See page 05–424).
(g) Turn the ignition switch to LOCK, and wait at least for 20 seconds.
(h) Turn the ignition switch to ON, and wait at least for 20 seconds.
(i) Check the DTC (See page 05–424).

OK:

DTC B1186/58 is not output.

HINT:

Codes other than code B1186/58 may be output at this time, but they are not relevant to this check.

NG → **REPLACE INSTRUMENT PANEL PASSENGER AIR BAG ASSY**

OK

USE SIMULATION METHOD TO CHECK

DTC	B1187/55	SHORT IN P SQUIB (2ND STEP) CIRCUIT (TO GROUND)

CIRCUIT DESCRIPTION

The P squib (2nd step) circuit consists of the airbag sensor assy center and instrument panel passenger airbag assy.
It causes the SRS to deploy when the SRS deployment conditions are satisfied.
DTC B1187/55 is recorded when ground short is detected in the P squib (2nd step) circuit.

DTC No.	DTC Detecting Condition	Trouble Area
B1187/55	• Short circuit in P squib (2nd step) wire harness (to ground) • P squib malfunction • Airbag sensor assy center malfunction	• Instrument panel passenger airbag assy (P squib, 2nd step) • Airbag sensor assy center • Instrument panel wire

WIRING DIAGRAM

See page 05–570.

INSPECTION PROCEDURE

1	CHECK P SQUIB CIRCUIT(AIRBAG SENSOR ASSY CENTER – INSTRUMENT PANEL PASSENGER AIRBAG ASSY)

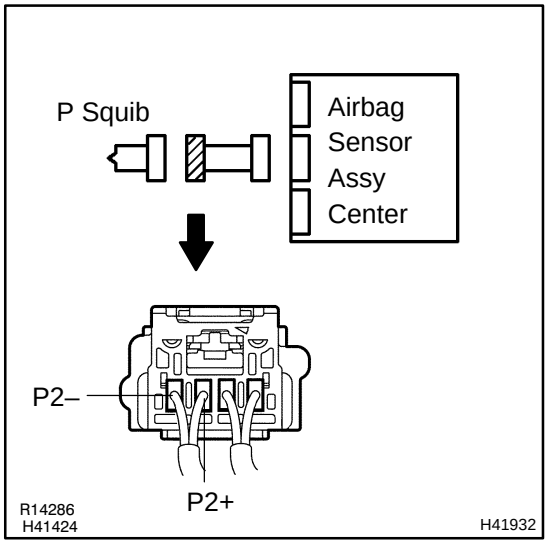

(a) Disconnect the negative (–) terminal cable from the battery, and wait at least for 90 seconds.
(b) Disconnect the connector between the airbag sensor assy center and the instrument panel passenger airbag assy.
(c) For the connector (on the instrument panel passenger airbag assy side) between the airbag sensor assy center and the instrument panel passenger airbag assy, measure the resistance between P2+ and body ground.
OK:
Resistance: 1 MΩ or Higher

NG → **REPAIR OR REPLACE INSTRUMENT PANEL WIRE**

OK

2 CHECK AIR BAG SENSOR ASSY CENTER

SST 09843–18040

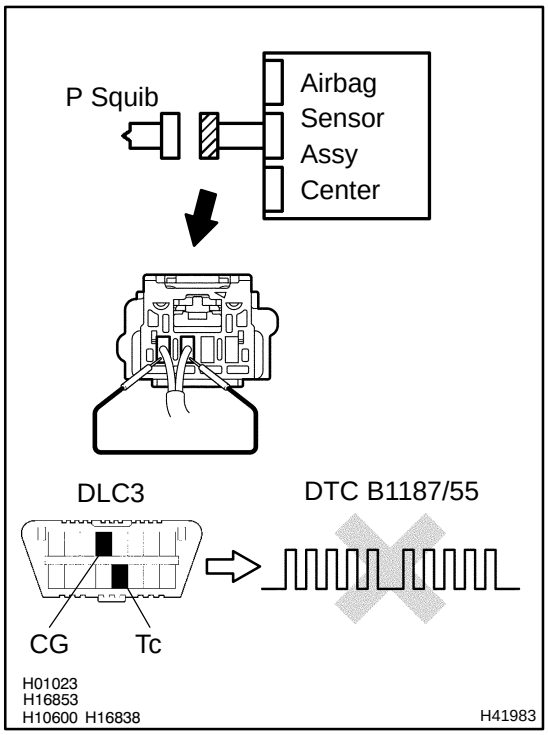

(a) Connect the connector to the airbag sensor assy center.
(b) Using a service wire, connect P2+ and P2– of the connector (on the instrument panel passenger airbag assy side) between the airbag sensor assy center and the instrument panel passenger airbag assy.
(c) Connect the negative (–) terminal cable to the battery, and wait at least for 2 seconds.
(d) Turn the ignition switch to ON, and wait at least for 20 seconds.
(e) Clear the DTC stored in memory (See page 05–424).
(f) Turn the ignition switch to LOCK, and wait at least for 20 seconds.
(g) Turn the ignition switch to ON, and wait at least for 20 seconds.
(h) Check the DTC (See page 05–424).

OK:

DTC B1187/55 is not output.

HINT:

Codes other than code B1187/55 may be output at this time, but they are not relevant to this check.

NG → **REPLACE AIR BAG SENSOR ASSY CENTER**

OK

3 CHECK P SQUIB

SST 09843–18040

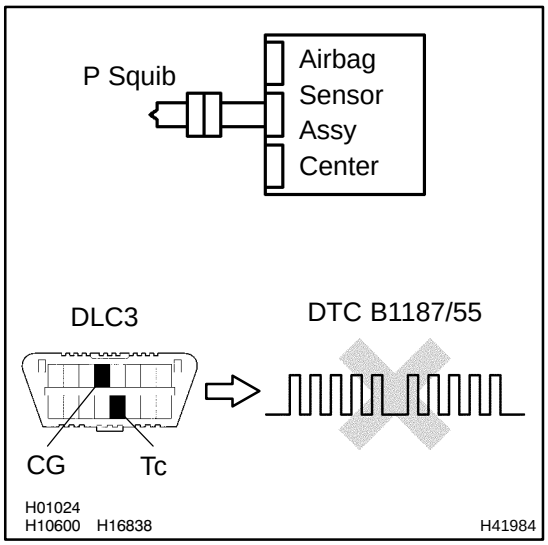

(a) Turn the ignition switch to LOCK.
(b) Disconnect the negative (–) terminal cable from the battery, and wait at least for 90 seconds.
(c) Connect the instrument panel passenger airbag assy connector.
(d) Connect the negative (–) terminal cable to the battery, and wait at least for 2 seconds.
(e) Turn the ignition switch to ON, and wait at least for 20 seconds.
(f) Clear the DTC stored in memory (See page 05–424).
(g) Turn the ignition switch to LOCK, and wait at least for 20 seconds.
(h) Turn the ignition switch to ON, and wait at least for 20 seconds.
(i) Check the DTC (See page 05–424).

OK:

DTC B1187/55 is not output.

HINT:

Codes other than code B1187/55 may be output at this time, but they are not relevant to this check.

NG → **REPLACE INSTRUMENT PANEL PASSENGER AIR BAG ASSY**

OK

4 USE SIMULATION METHOD TO CHECK

NG → **Go to step 1**

OK

REPLACE ALL SRS COMPONENTS INCLUDING THE WIRE HARNESS

DTC	B1188/56	SHORT IN SQUIB (2ND STEP) CIRCUIT (TO B+)

CIRCUIT DESCRIPTION

The P squib (2nd step) circuit consists of the airbag sensor assy center and instrument panel passenger airbag assy.
It causes the SRS to deploy when the SRS deployment conditions are satisfied.
DTC B1188/56 is recorded when a B+ short is detected in the P squib (2nd step) circuit.

DTC No.	DTC Detecting Condition	Trouble Area
B1188/56	• Short circuit in P squib (2nd step) wire harness (to B+) • P squib (2nd step) malfunction • Airbag sensor assy center malfunction	• Instrument panel passenger airbag assy (P squib, 2nd step) • Airbag sensor assy center • Instrument panel wire

WIRING DIAGRAM

See page 05–570.

INSPECTION PROCEDURE

1	CHECK P SQUIB CIRCUIT(AIRBAG SENSOR ASSY CENTER – INSTRUMENT PANEL PASSENGER AIRBAG ASSY)

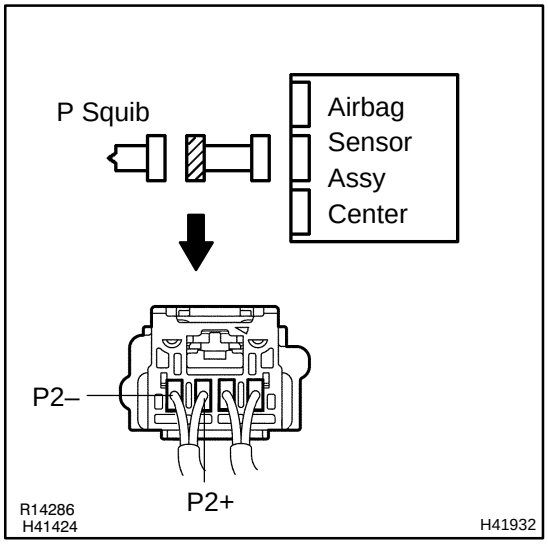

(a) Disconnect the negative (–) terminal cable from the battery, and wait at least for 90 seconds.
(b) Disconnect the connector between the airbag sensor assy center and the instrument panel passenger airbag assy.
(c) Connect the negative (–) terminal cable to the battery, and wait at least for 2 seconds.
(d) Turn the ignition switch to ON.
(e) For the connector (on the instrument panel passenger airbag assy side) between the airbag sensor assy center and the instrument panel passenger airbag assy, measure the voltage between P2+ and body ground.
OK:
Voltage: Below 1 V

NG → **REPAIR OR REPLACE INSTRUMENT PANEL WIRE**

OK

2	CHECK AIR BAG SENSOR ASSY CENTER

SST 09843–18040

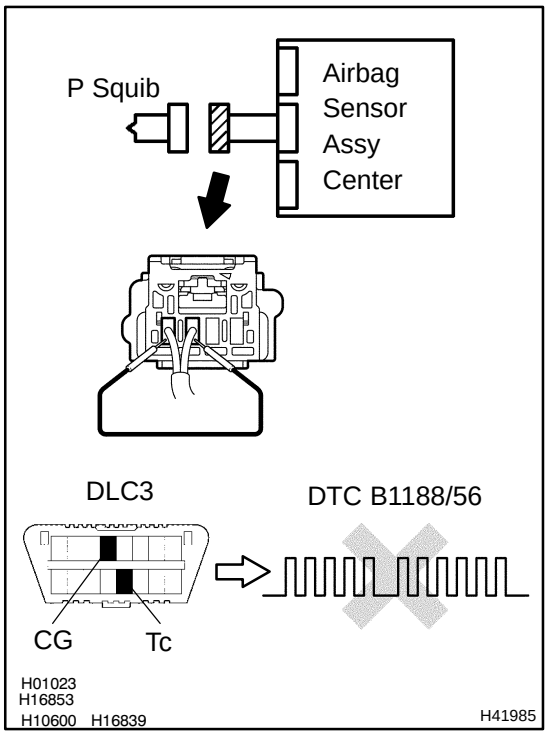

(a) Turn the ignition switch to LOCK.
(b) Disconnect the negative (–) terminal cable from the battery, and wait at least for 90 seconds.
(c) Connect the connector to the airbag sensor assy center.
(d) Using a service wire, connect P2+ and P2– of the connector (on the instrument panel passenger airbag assy side) between the airbag sensor assy center and the instrument panel passenger airbag assy.
(e) Connect the negative (–) terminal cable to the battery, and wait at least for 2 seconds.
(f) Turn the ignition switch to ON, and wait at least for 20 seconds.
(g) Clear the DTC stored in memory (See page 05–424).
(h) Turn the ignition switch to LOCK, and wait at least for 20 seconds.
(i) Turn the ignition switch to ON, and wait at least for 20 seconds.
(j) Check the DTC (See page 05–424).

OK:

DTC B1188/56 is not output.

HINT:

Codes other than code B1188/56 may be output at this time, but they are not relevant to this check.

NG → **REPLACE AIR BAG SENSOR ASSY CENTER**

OK

3 CHECK P SQUIB

SST 09843–18040

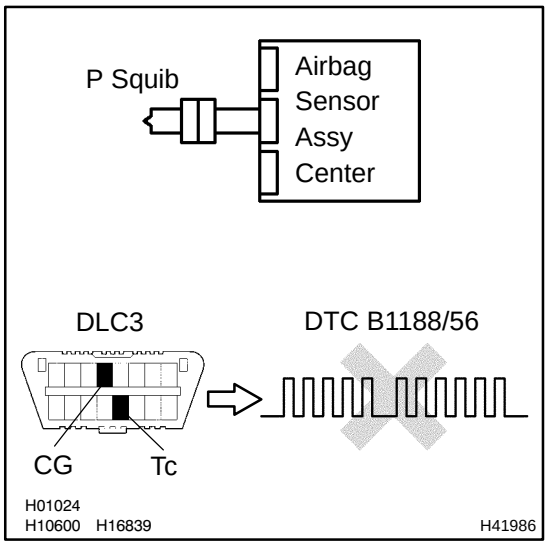

(a) Turn the ignition switch to LOCK.
(b) Disconnect the negative (–) terminal cable from the battery, and wait at least for 90 seconds.
(c) Connect the instrument panel passenger airbag assy connector.
(d) Connect the negative (–) terminal cable to the battery, and wait at least for 2 seconds.
(e) Turn the ignition switch to ON, and wait at least for 20 seconds.
(f) Clear the DTC stored in memory (See page 05–424).
(g) Turn the ignition switch to LOCK, and wait at least for 20 seconds.
(h) Turn the ignition switch to ON, and wait at least for 20 seconds.
(i) Check the DTC (See page 05–424).

OK:

DTC B1188/56 is not output.

HINT:

Codes other than code B1188/56 may be output at this time, but they are not relevant to this check.

NG → **REPLACE INSTRUMENT PANEL PASSENGER AIR BAG ASSY**

OK

4 USE SIMULATION METHOD TO CHECK

NG → **Go to step 1**

OK

REPLACE ALL SRS COMPONENTS INCLUDING THE WIRE HARNESS

DTC B0100/13 SHORT IN D SQUIB CIRCUIT

CIRCUIT DESCRIPTION

The D squib circuit consists of the airbag sensor assy center, spiral cable sub–assy and horn button assy. It causes the SRS to deploy when the SRS deployment conditions are satisfied.
DTC B0100/13 is recorded when a short is detected in the D squib circuit.

DTC No.	DTC Detecting Condition	Trouble Area
B0100/13	• Short circuit between D+ wire harness and D– wire harness of squib • D squib malfunction • Spiral cable sub–assy malfunction • Airbag sensor assy center malfunction	• Horn button assy (D squib) • Spiral cable sub–assy • Airbag sensor assy center • Instrument panel wire

WIRING DIAGRAM

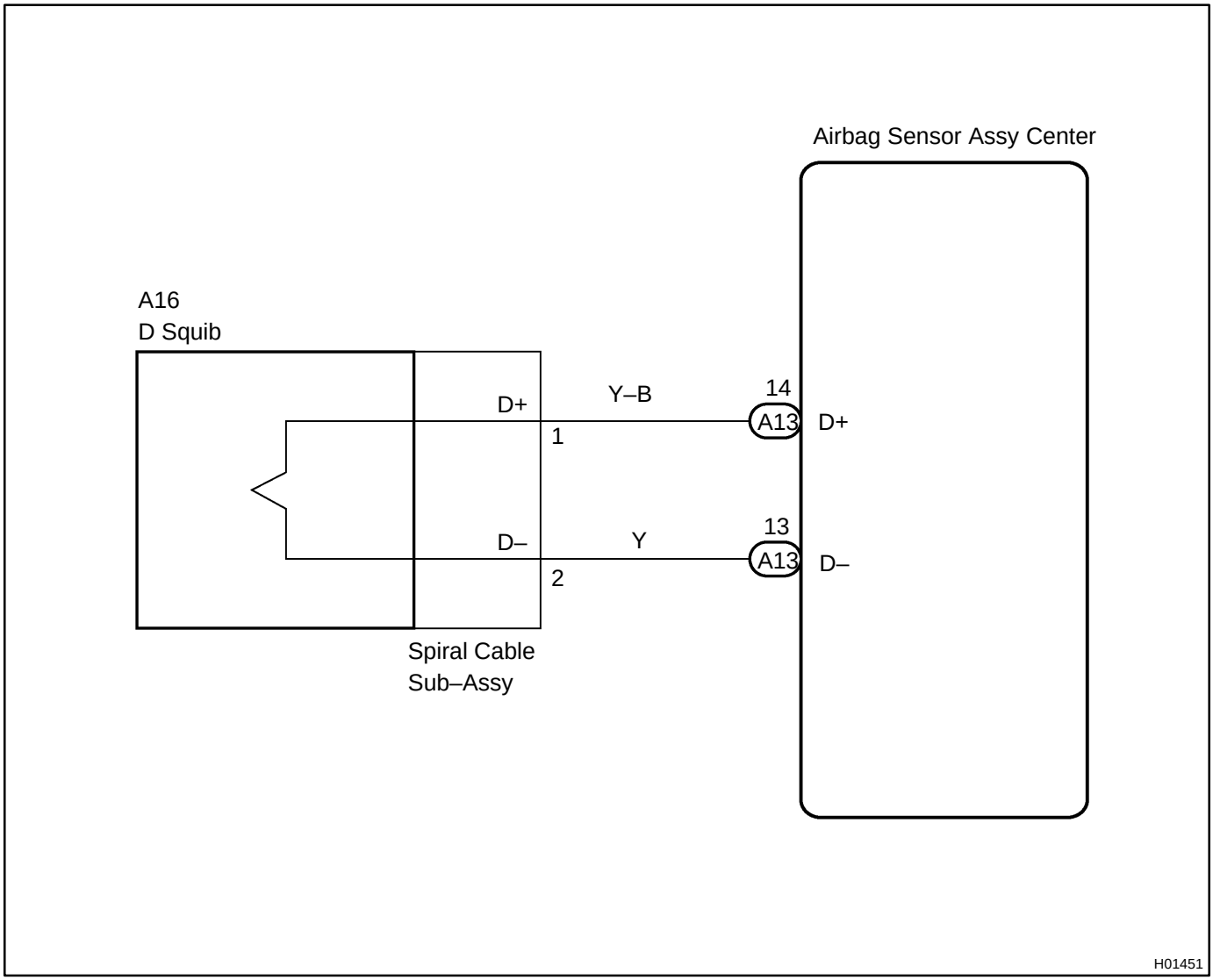

INSPECTION PROCEDURE

1	CHECK D SQUIB CIRCUIT(AIRBAG SENSOR ASSY CENTER – HORN BUTTON ASSY)

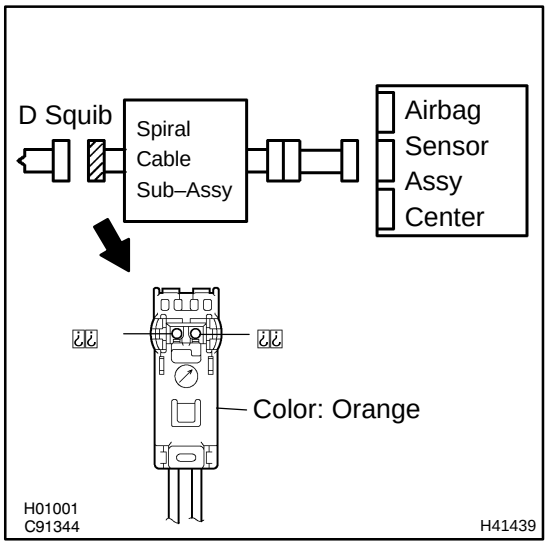

(a) Disconnect the negative (–) terminal cable from the battery, and wait at least for 90 seconds.
(b) Disconnect the connectors between the airbag sensor assy center and the horn button assy.
(c) Release the airbag activation prevention mechanism of the connector (on the airbag sensor assy center side) between the airbag sensor assy center and the spiral cable sub–assy (See page 05–424).
(d) For the connector (on the spiral cable sub–assy side) between the horn button assy and the spiral cable sub–assy, measure the resistance between D+ and D–.
OK:
Resistance: 1 MΩ or Higher

NG → **Go to step 4**

OK

2	CHECK AIR BAG SENSOR ASSY CENTER

SST 09843–18040

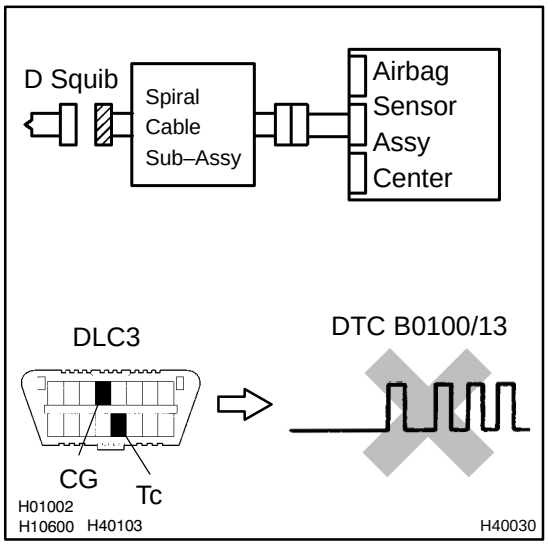

(a) Connect the connector to the airbag sensor assy center.
(b) Connect the negative (–) terminal cable to the battery, and wait at least for 2 seconds.
(c) Turn the ignition switch to ON, and wait at least for 20 seconds.
(d) Clear the DTC stored in memory (See page 05–424).
(e) Turn the ignition switch to LOCK, and wait at least for 20 seconds.
(f) Turn the ignition switch to ON, and wait at least for 20 seconds.
(g) Check the DTC (See page 05–424).
OK:
DTC B0100/13 is not output.

HINT:
Codes other than code B0100/13 may be output at this time, but they are not relevant to this check.

NG → **REPLACE AIR BAG SENSOR ASSY CENTER**

OK

3	CHECK D SQUIB

SST 09843–18040

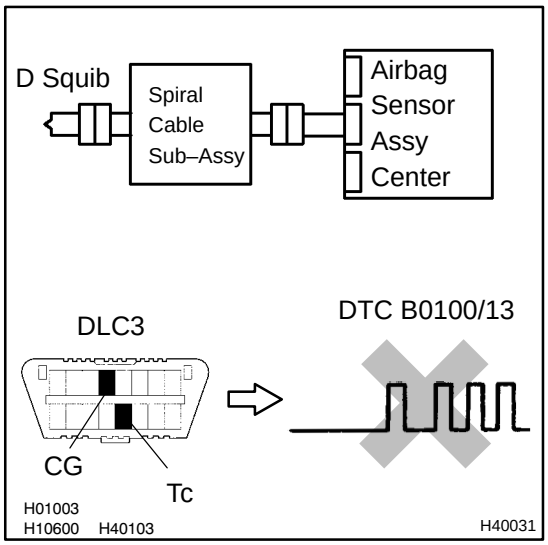

(a) Turn the ignition switch to LOCK.
(b) Disconnect the negative (–) terminal cable from the battery, and wait at least for 90 seconds.
(c) Connect the horn button assy connectors.
(d) Connect the negative (–) terminal cable to the battery, and wait at least for 2 seconds.
(e) Turn the ignition switch to ON, and wait at least for 20 seconds.
(f) Clear the DTC stored in memory (See page 05–424).
(g) Turn the ignition switch to LOCK, and wait at least for 20 seconds.
(h) Turn the ignition switch to ON, and wait at least for 20 seconds.
(i) Check the DTC (See page 05–424).

OK:

DTC B0100/13 is not output.

HINT:

Codes other than code B0100/13 may be output at this time, but they are not relevant to this check.

NG → **REPLACE HORN BUTTON ASSY**

OK →

USE SIMULATION METHOD TO CHECK

4	CHECK INSTRUMENT PANEL WIRE(AIRBAG SENSOR ASSY CENTER – SPIRAL CABLE SUB–ASSY)

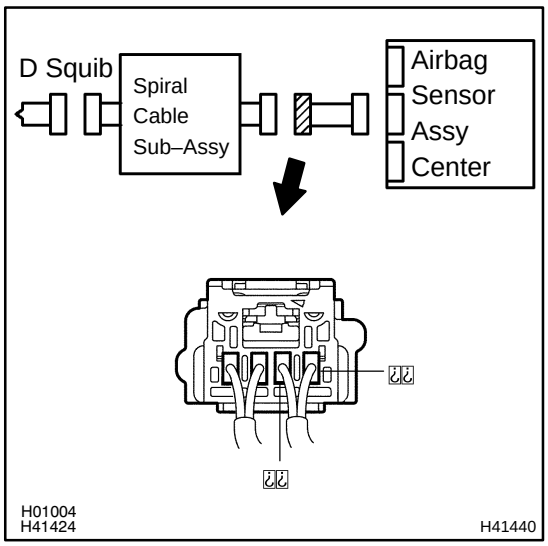

(a) Disconnect the connector of the instrument panel wire.
(b) Release the airbag activation prevention mechanism of the connector (on the airbag sensor assy center side) between the airbag sensor assy center and the spiral cable sub–assy (See page 05–424).
(c) For the connector (on the spiral cable sub–assy side) between the airbag sensor assy center and the spiral cable sub–assy, measure the resistance between D+ and D–.
OK:
Resistance: 1 MΩ or Higher

NG → **REPAIR OR REPLACE INSTRUMENT PANEL WIRE(AIRBAG SENSOR ASSY CENTER – SPIRAL CABLE SUB–ASSY)**

OK

5	CHECK SPIRAL CABLE SUB–ASSY

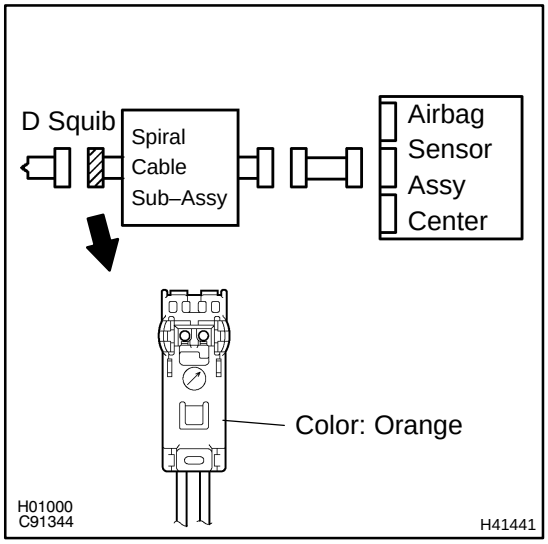

(a) Release the airbag activation prevention mechanism of the spiral cable sub–assy connector on the airbag sensor assy center side (See page 05–424).
(b) For the orange connector (on the spiral cable sub–assy side) between the horn button assy and the spiral cable sub–assy, measure the resistance between D+ and D–.
OK:
Resistance: 1 MΩ or Higher

NG → **REPLACE SPIRAL CABLE SUB–ASSY**

OK

USE SIMULATION METHOD TO CHECK

DTC B0101/14 OPEN IN D SQUIB CIRCUIT

CIRCUIT DESCRIPTION

The D squib circuit consists of the airbag sensor assy center, spiral cable sub–assy and horn button assy. It causes the SRS to deploy when the SRS deployment conditions are satisfied.
DTC B0101/14 is recorded when an open is detected in the D squib circuit.

DTC No.	DTC Detecting Condition	Trouble Area
B0101/14	• Open circuit in D+ wire harness or D– wire harness of squib • D squib malfunction • Spiral cable sub–assy malfunction • Airbag sensor assy center malfunction	• Horn button assy (D squib) • Spiral cable sub–assy • Airbag sensor assy center • Instrument panel wire

WIRING DIAGRAM

See page 05–437.

INSPECTION PROCEDURE

1	CHECK D SQUIB CIRCUIT(AIRBAG SENSOR ASSY CENTER – HORN BUTTON ASSY)

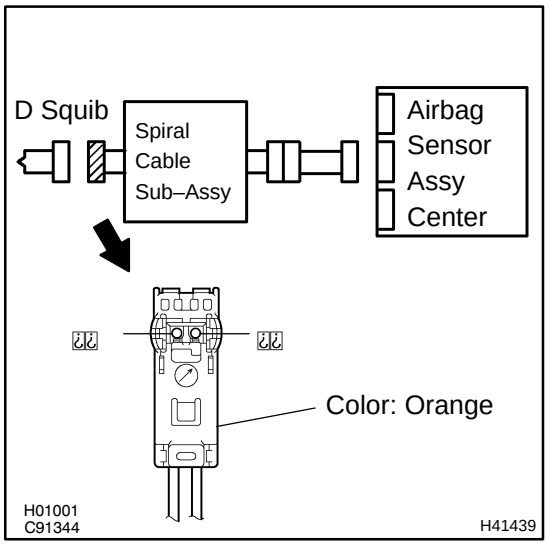

(a) Disconnect the negative (–) terminal cable from the battery, and wait at least for 90 seconds.
(b) Disconnect the connectors between the horn button assy and the airbag sensor assy center.
(c) For the orange connector (on the spiral cable sub–assy side) between the horn button assy and the spiral cable sub–assy, measure the resistance between D+ and D–.
OK:
Resistance: Below 1 Ω

NG → **Go to step 4**

OK

2 CHECK AIR BAG SENSOR ASSY CENTER

SST 09843–18040

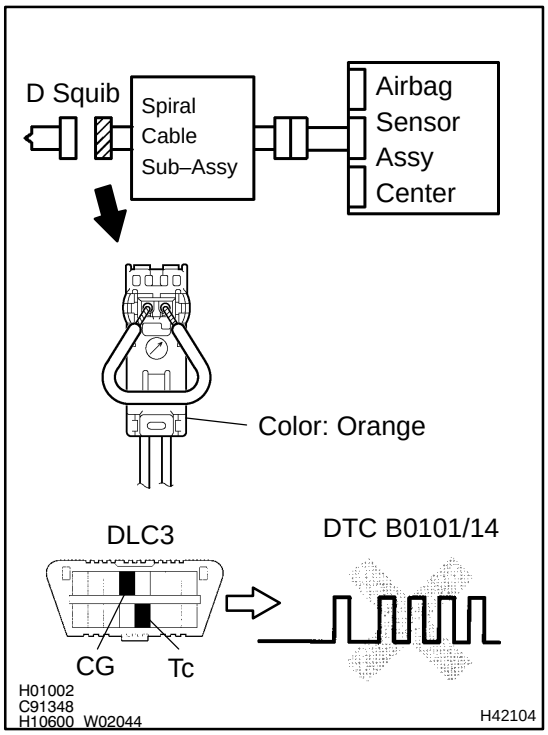

(a) Connect the connector to the airbag sensor assy center.
(b) Using a service wire, connect D+ and D– of the orange connector (on the spiral cable sub–assy side) between the horn button assy and the spiral cable sub–assy.
(c) Connect the negative (–) terminal cable to the battery, and wait at least for 2 seconds.
(d) Turn the ignition switch to ON, and wait at least for 20 seconds.
(e) Clear the DTC stored in memory (See page 05–424).
(f) Turn the ignition switch to LOCK, and wait at least for 20 seconds.
(g) Turn the ignition switch to ON, and wait at least for 20 seconds.
(h) Check the DTC (See page 05–424).

OK:

DTC B0101/14 is not output.

HINT:

Codes other than code B0101/14 may be output at this time, but they are not relevant to this check.

NG → **REPLACE AIR BAG SENSOR ASSY CENTER**

OK

3 CHECK D SQUIB

SST 09843–18040

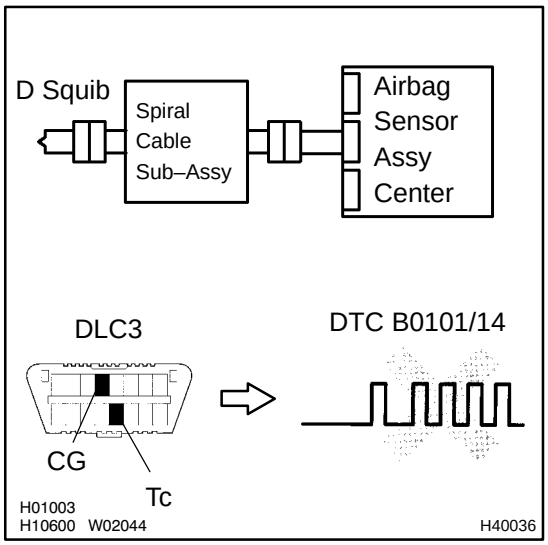

(a) Turn the ignition switch to LOCK.
(b) Disconnect the negative (–) terminal cable from the battery, and wait at least for 90 seconds.
(c) Connect the horn button assy connector.
(d) Connect the negative (–) terminal cable to the battery, and wait at least for 2 seconds.
(e) Turn the ignition switch to ON, and wait at least for 20 seconds.
(f) Clear the DTC stored in memory (See page 05–424).
(g) Turn the ignition switch to LOCK, and wait at least for 20 seconds.
(h) Turn the ignition switch to ON, and wait at least for 20 seconds.
(i) Check the DTC (See page 05–424).
OK:
DTC B0101/14 is not output.

HINT:
Codes other than code B0101/14 may be output at this time, but they are not relevant to this check.

NG → **REPLACE HORN BUTTON ASSY**

OK

USE SIMULATION METHOD TO CHECK

4 CHECK INSTRUMENT PANEL WIRE(AIRBAG SENSOR ASSY CENTER – SPIRAL CABLE SUB–ASSY)

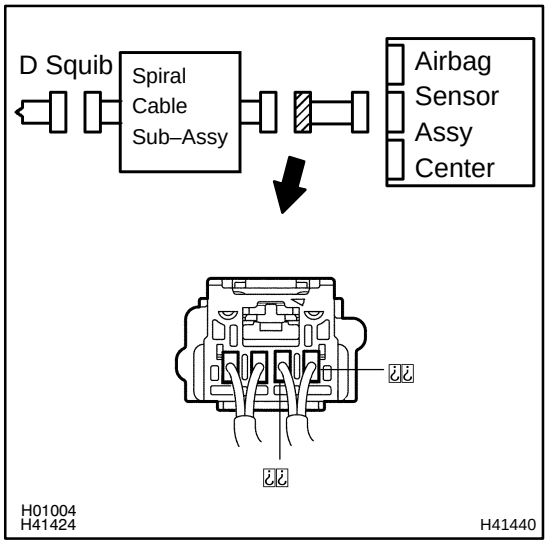

(a) Disconnect the connector of the instrument panel wire.
(b) For the connector (on the spiral cable sub–assy side) between the airbag sensor assy center and the spiral cable sub–assy, measure the resistance between D+ and D–.
OK:
Resistance: Below 1 Ω

NG → **REPAIR OR REPLACE INSTRUMENT PANEL WIRE(AIRBAG SENSOR ASSY CENTER – SPIRAL CABLE SUB–ASSY)**

OK

5	CHECK SPIRAL CABLE SUB–ASSY

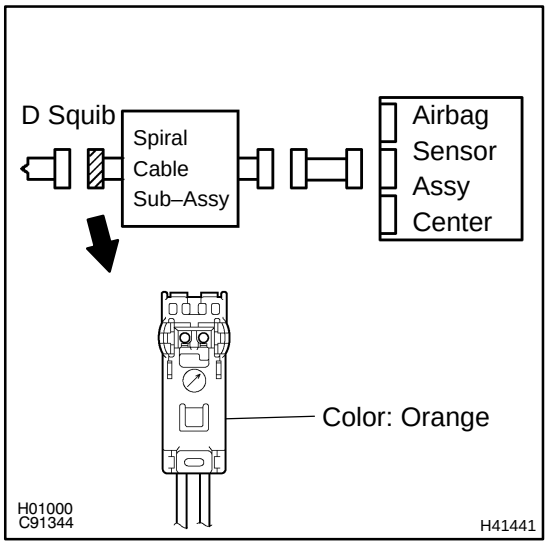

(a) For the orange connector (on the spiral cable sub–assy side) between the horn button assy and the spiral cable sub–assy, measure the resistance between D+ and D–.

OK:

Resistance: Below 1 Ω

NG → **REPLACE SPIRAL CABLE SUB–ASSY**

OK

USE SIMULATION METHOD TO CHECK

DTC B0102/11 SHORT IN D SQUIB CIRCUIT (TO GROUND)

CIRCUIT DESCRIPTION

The D squib circuit consists of the airbag sensor assy center, spiral cable sub–assy and horn button assy. It causes the SRS to deploy when the SRS deployment conditions are satisfied.
DTC B0102/11 is recorded when a ground short is detected in the D squib circuit.

DTC No.	DTC Detecting Condition	Trouble Area
B0102/11	• Short circuit in D squib wire harness (to ground) • D squib malfunction • Spiral cable sub–assy malfunction • Airbag sensor assy center malfunction	• Horn button assy (D squib) • Spiral cable sub–assy • Airbag sensor assy center • Instrument panel wire

WIRING DIAGRAM

See page 05–437.

INSPECTION PROCEDURE

1	CHECK D SQUIB CIRCUIT(AIRBAG SENSOR ASSY CENTER – HORN BUTTON ASSY)

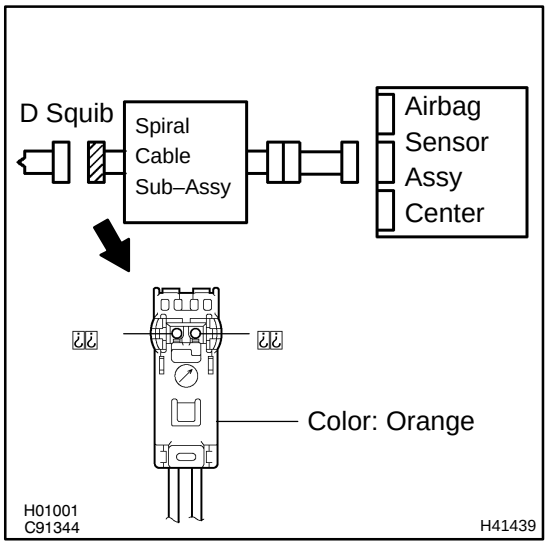

(a) Disconnect the negative (–) terminal cable from the battery, and wait at least for 90 seconds.
(b) Disconnect the connectors between the airbag sensor assy center and the horn button assy.
(c) For the orange connector (on the spiral cable sub–assy side) between the horn button assy and the spiral cable sub–assy, measure the resistance between D+ and body ground.
OK:
Resistance: 1 MΩ or Higher

NG → **Go to step 5**

OK

2 CHECK AIR BAG SENSOR ASSY CENTER

SST 09843–18040

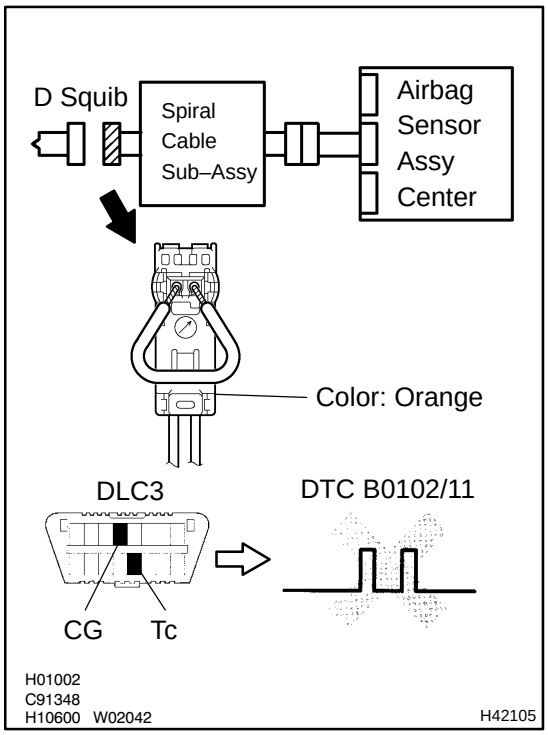

(a) Connect the connector to the airbag sensor assy center.
(b) Using a service wire, connect D+ and D– of the orange connector (on the spiral cable sub–assy side) between the horn button assy and the spiral cable sub–assy.
(c) Connect the negative (–) terminal cable to the battery, and wait at least for 2 seconds.
(d) Turn the ignition switch to ON, and wait t least for 20 seconds.
(e) Clear the DTC stored in memory (See page 05–424).
(f) Turn the ignition switch to LOCK, and wait at least for 20 seconds.
(g) Turn the ignition switch to ON, and wait at least for 20 seconds.
(h) Check the DTC (See page 05–424).

OK:

DTC B0102/11 is not output.

HINT:

Codes other than code B0102/11 may be output at this time, but they are not relevant to this check.

NG → **REPLACE AIR BAG SENSOR ASSY CENTER**

OK

3 CHECK D SQUIB

SST 09843–18040

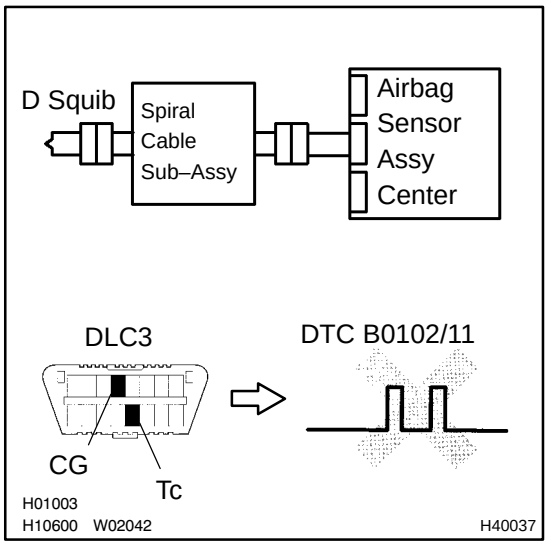

(a) Turn the ignition switch to LOCK.
(b) Disconnect the negative (–) terminal cable from the battery, and wait at least for 90 seconds.
(c) Connect the horn button assy connectors.
(d) Connect the negative (–) terminal cable to the battery, and wait at least for 2 seconds.
(e) Turn the ignition switch to ON, and wait at least for 20 seconds.
(f) Clear the DTC stored in memory (See page 05–424).
(g) Turn the ignition switch to LOCK, and wait at least for 20 seconds.
(h) Turn the ignition switch to ON, and wait at least for 20 seconds.
(i) Check the DTC (See page 05–424).

OK:

DTC B0102/11 is not output.

HINT:

Codes other than code B0102/11 may be output at this time, but they are not relevant to this check.

NG → **REPLACE HORN BUTTON ASSY**

OK

4 USE SIMULATION METHOD TO CHECK

NG → **Go to step 1**

OK

REPLACE ALL SRS COMPONENTS INCLUDING THE WIRE HARNESS

5	CHECK INSTRUMENT PANEL WIRE(AIRBAG SENSOR ASSY CENTER – SPIRAL CABLE SUB–ASSY)

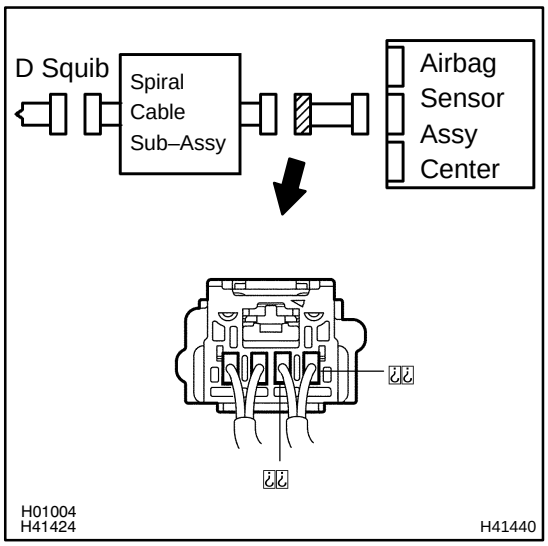

(a) Disconnect the connector of the instrument panel wire.
(b) For the connector (on the spiral cable sub–assy side) between the airbag sensor assy center and the spiral cable sub–assy, measure the resistance between D+ and body ground.
OK:
Resistance: 1 MΩ or Higher

NG → **REPAIR OR REPLACE INSTRUMENT PANEL WIRE(AIRBAG SENSOR ASSY CENTER – SPIRAL CABLE SUB–ASSY)**

OK

6	CHECK SPIRAL CABLE SUB–ASSY

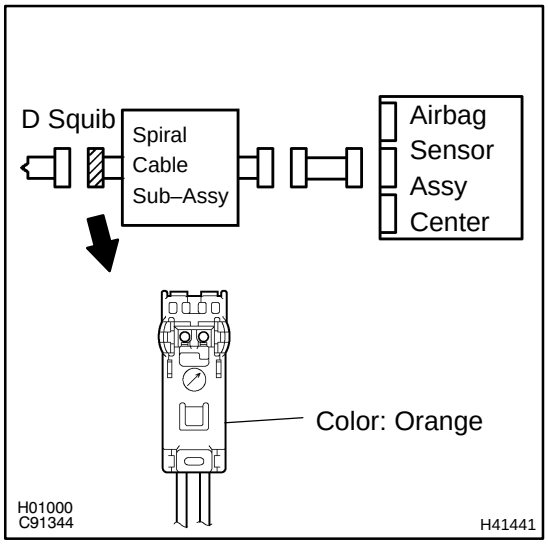

(a) For the orange connector (on the spiral cable sub–assy side) between the horn button assy and the spiral cable sub–assy, measure the resistance between D+ and body ground.
OK:
Resistance: 1 MΩ or Higher

NG → **REPLACE SPIRAL CABLE SUB–ASSY**

OK

7	USE SIMULATION METHOD TO CHECK

NG → **Go to step 1**

OK

REPLACE ALL SRS COMPONENTS INCLUDING THE WIRE HARNESS

DTC B0103/12 SHORT IN D SQUIB CIRCUIT (TO B+)

CIRCUIT DESCRIPTION

The D squib circuit consists of the airbag sensor assy center, spiral cable sub–assy and horn button assy. It causes the SRS to deploy when the SRS deployment conditions are satisfied.
DTC B0103/12 is recorded when a B+ short is detected in the D squib circuit.

DTC No.	DTC Detecting Condition	Trouble Area
B0103/12	• Short circuit in D squib wire harness (to B+) • D squib malfunction • Spiral cable sub–assy malfunction • Airbag sensor assy center malfunction	• Horn button assy (D squib) • Spiral cable sub–assy • Airbag sensor assy center • Instrument panel wire

WIRING DIAGRAM

See page 05–437.

INSPECTION PROCEDURE

1	CHECK D SQUIB CIRCUIT(AIRBAG SENSOR ASSY CENTER – HORN BUTTON ASSY)

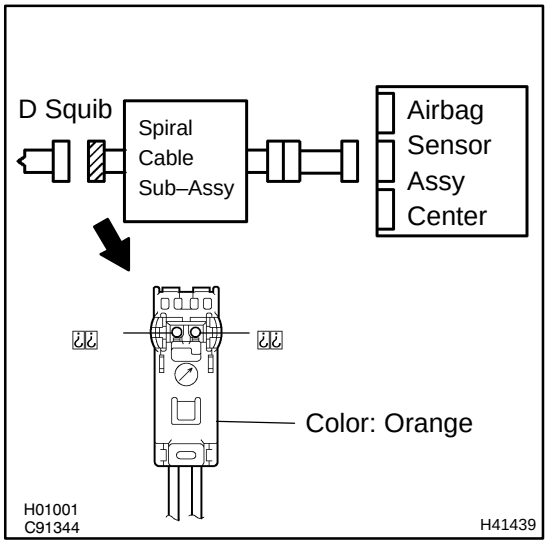

(a) Disconnect the negative (–) terminal cable from the battery, and wait at least for 90 seconds.
(b) Disconnect the connectors between the airbag sensor assy center and the horn button assy.
(c) Connect the negative (–) terminal cable to the battery, and wait at least for 2 seconds.
(d) Turn the ignition switch to ON.
(e) For the orange connector (on the spiral cable sub–assy side) between the horn button assy and the spiral cable sub–assy, measure the voltage between D+ and body ground.
OK:
Voltage: Below 1 V

NG → **Go to step 5**

OK

2 CHECK AIR BAG SENSOR ASSY CENTER

SST 09843–18040

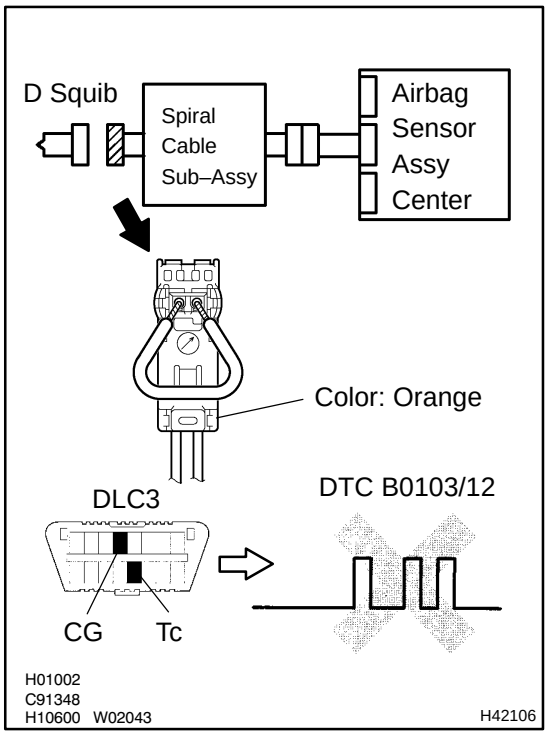

(a) Turn the ignition switch to LOCK.
(b) Disconnect the negative (–) terminal cable from the battery, and wait at least for 90 seconds.
(c) Connect the connector to the airbag sensor assy center.
(d) Using a service wire, connect D+ and D– of the orange connector (on the spiral cable sub–assy side) between the horn button assy and the spiral cable sub–assy.
(e) Connect the negative (–) terminal cable to the battery, and wait at least for 2 seconds.
(f) Turn the ignition switch to ON, and wait at least for 20 seconds.
(g) Clear the DTC stored in memory (See page 05–424).
(h) Turn the ignition switch to LOCK, and wait at least for 20 seconds.
(i) Turn the ignition switch to ON, and wait at least for 60 seconds.
(j) Check the DTC (See page 05–424).

OK:

DTC B0103/12 is not output.

HINT:

Codes other than code B0103/12 may be output at this time, but they are not relevant to this check.

NG → **REPLACE AIR BAG SENSOR ASSY CENTER**

OK

3 CHECK D SQUIB

SST 09843–18040

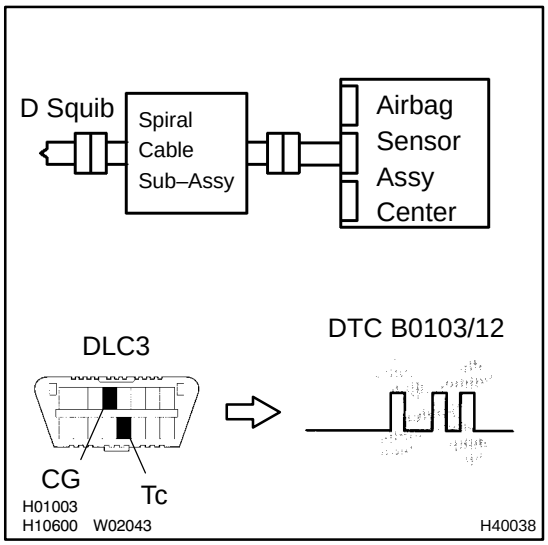

(a) Turn the ignition switch to LOCK.
(b) Disconnect the negative (–) terminal cable from the battery, and wait at least for 90 seconds.
(c) Connect the horn button assy connectors.
(d) Connect the negative (–) terminal cable to the battery, and wait at least for 2 seconds.
(e) Turn the ignition switch to ON, and wait at least for 20 seconds.
(f) Clear the DTC stored in memory (See page 05–424).
(g) Turn the ignition switch to LOCK, and wait at least for 20 seconds.
(h) Turn the ignition switch to ON, and wait at least for 20 seconds.
(i) Check the DTC (See page 05–424).

OK:

DTC B0103/12 is not output.

HINT:

Codes other than code B0103/12 may be output at this time, but they are not relevant to this check.

NG → **REPLACE HORN BUTTON ASSY**

OK

4 USE SIMULATION METHOD TO CHECK

NG → **Go to step 1**

OK

REPLACE ALL SRS COMPONENTS INCLUDING THE WIRE HARNESS

5	CHECK INSTRUMENT PANEL WIRE(AIRBAG SENSOR ASSY CENTER – SPIRAL CABLE SUB–ASSY)

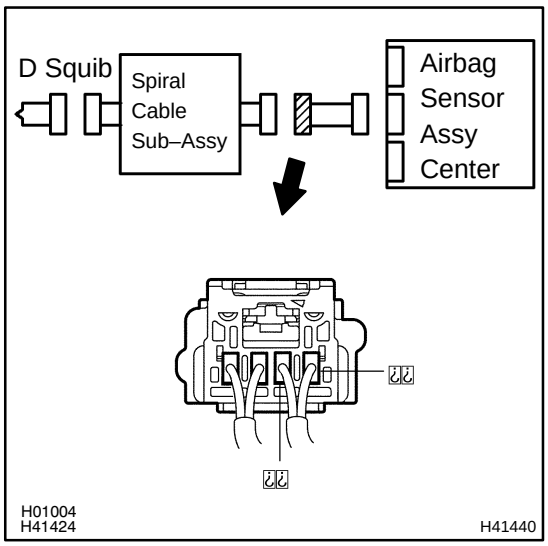

(a) Turn the ignition switch to LOCK.
(b) Disconnect the connectors of the instrument panel wire.
(c) Turn the ignition switch to ON.
(d) For the connector (on the spiral cable sub–assy side) between the airbag sensor assy center and the spiral cable sub–assy, measure the voltage between D+ and body ground.
OK:
Voltage: Below 1 V

NG → **REPAIR OR REPLACE INSTRUMENT PANEL WIRE(AIRBAG SENSOR ASSY CENTER – SPIRAL CABLE SUB–ASSY)**

OK

6	CHECK SPIRAL CABLE SUB–ASSY

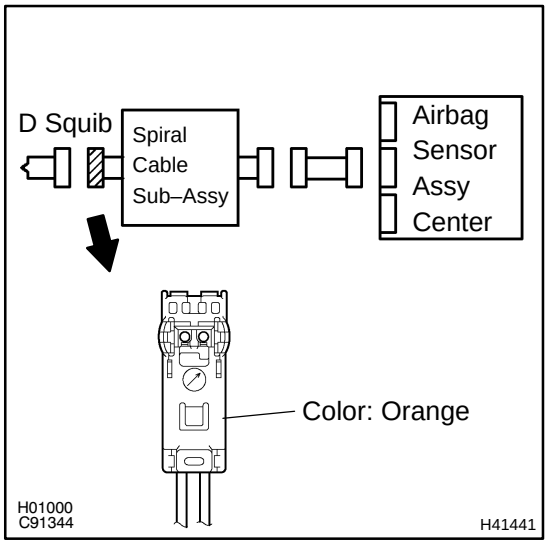

(a) For the orange connector (on the spiral cable sub–assy side) between the horn button assy and the spiral cable sub–assy, measure the voltage between D+ and body ground.
OK:
Voltage: Below 1 V

NG → **REPLACE SPIRAL CABLE SUB–ASSY**

OK

7	USE SIMULATION METHOD TO CHECK

NG → **Go to step 1**

OK

REPLACE ALL SRS COMPONENTS INCLUDING THE WIRE HARNESS

DTC B0105/53 SHORT IN P SQUIB CIRCUIT

CIRCUIT DESCRIPTION

The P squib circuit consists of the airbag sensor assy center and instrument panel passenger airbag assy. It causes the SRS to deploy when the SRS deployment conditions are satisfied.
DTC B0105/53 is recorded when a short is detected in the P squib circuit.

DTC No.	DTC Detecting Condition	Trouble Area
B0105/53	• Short circuit between P+ wire harness and P– wire harness of squib. • P squib malfunction • Airbag sensor assy center malfunction	• Instrument panel passenger airbag assy (P squib) • Airbag sensor assy center • Instrument panel wire

WIRING DIAGRAM

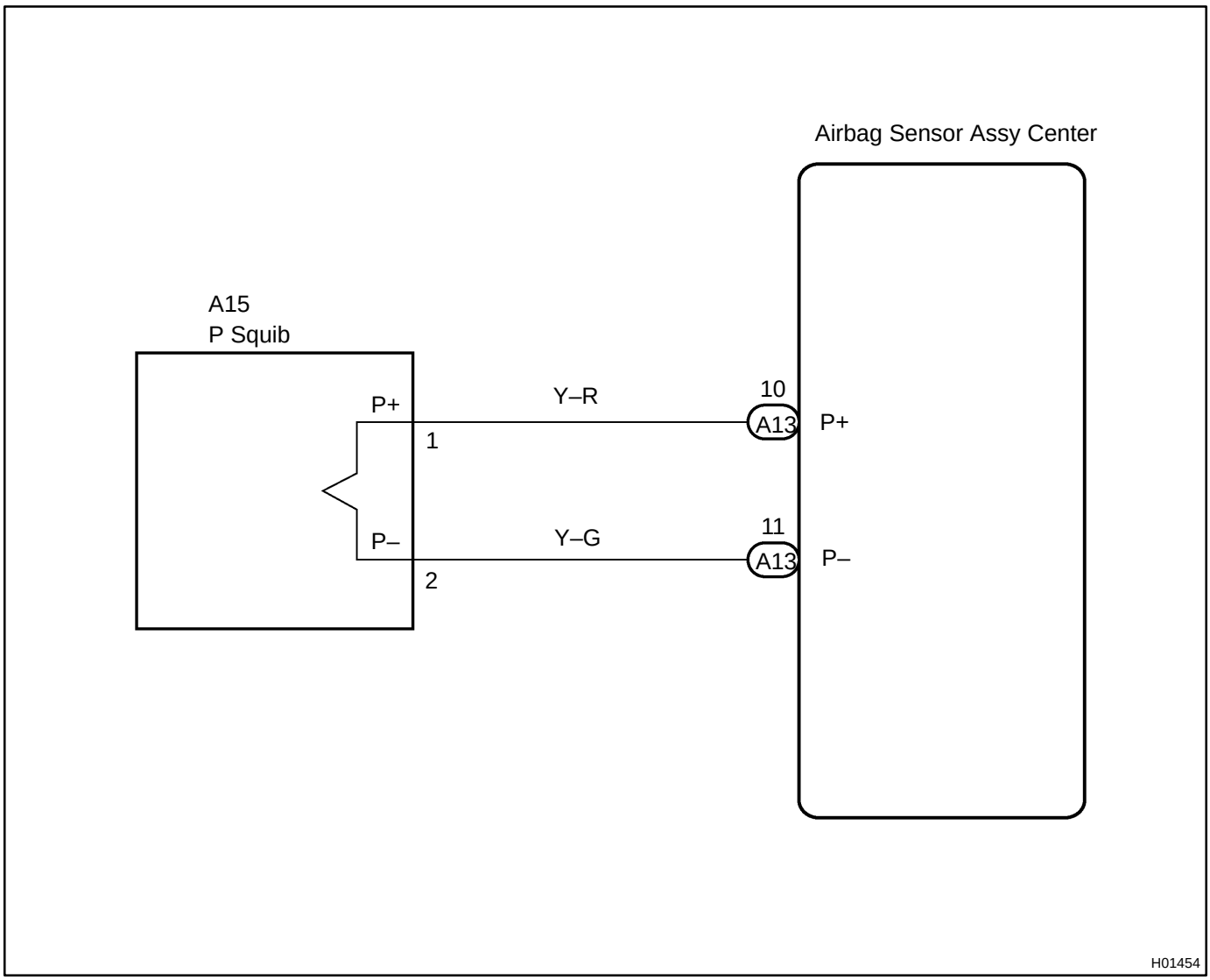

INSPECTION PROCEDURE

1	CHECK P SQUIB CIRCUIT(AIRBAG SENSOR ASSY CENTER – INSTRUMENT PANEL PASSENGER AIRBAG ASSY)

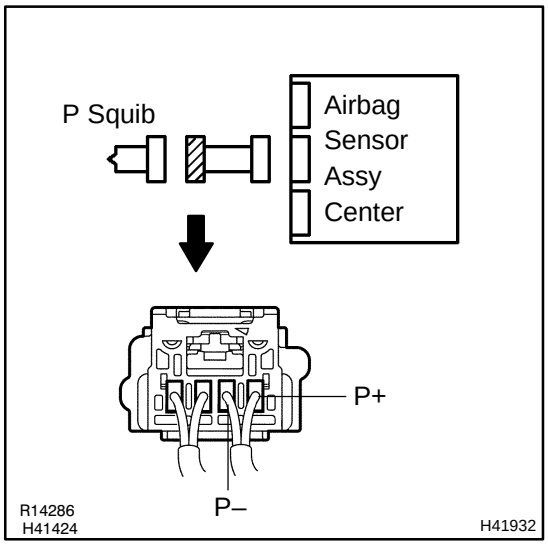

(a) Disconnect the negative (–) terminal cable from the battery, and wait at least for 90 seconds.

(b) Disconnect the connectors between the airbag sensor assy center and the instrument panel passenger airbag assy.

HINT:

Make sure that the connector is not damaged (The lock button is not disengaged, or the claw of the lock is not deformed or damaged). If the damage is found, replace the wire harness.

(c) Release the airbag activation prevention mechanism of the connector (on the airbag sensor assy center side) between the airbag sensor assy center and the instrument panel passenger airbag assy (See page 05–424).

(d) For the connector (on the instrument panel passenger airbag assy side) between the airbag sensor assy center and the instrument panel passenger airbag assy, measure the resistance between P+ and P–.

OK:

Resistance: 1 MΩ or Higher

NG → **REPAIR OR REPLACE INSTRUMENT PANEL WIRE**

OK

2 CHECK AIR BAG SENSOR ASSY CENTER

SST 09843–18040

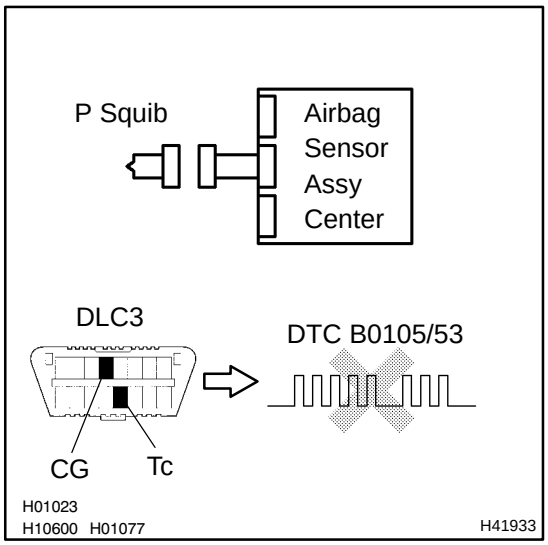

(a) Connect the connector to the airbag sensor assy center.
(b) Connect the negative (–) terminal cable to the battery, and wait at least for 2 seconds.
(c) Turn the ignition switch to ON, and wait at least for 20 seconds.
(d) Clear the DTC stored in memory (See page 05–424).
(e) Turn the ignition switch to LOCK, and wait at least for 20 seconds.
(f) Turn the ignition switch to ON, and wait at least for 20 seconds.
(g) Check the DTC (See page 05–424).
OK:
DTC B0105/53 is not output.

HINT:
Codes other than code B0105/53 may be output at this time, but they are not relevant to this check.

NG → **REPLACE AIR BAG SENSOR ASSY CENTER**

OK

3 CHECK P SQUIB

SST 09843–18040

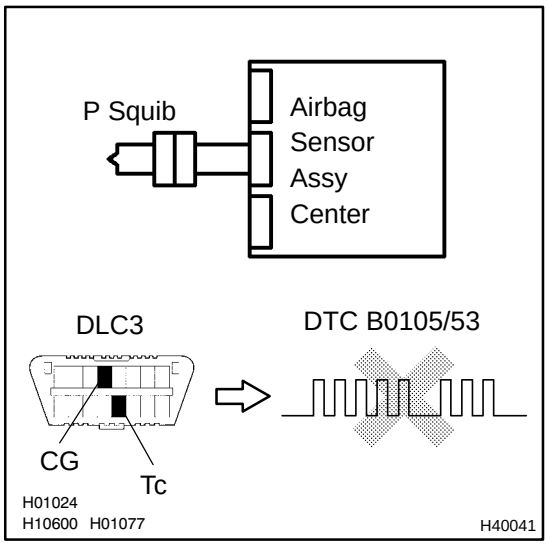

(a) Turn the ignition switch to LOCK.
(b) Disconnect the negative (–) terminal cable from the battery, and wait at least for 90 seconds.
(c) Connect the instrument panel passenger airbag assy connector.
(d) Connect the negative (–) terminal cable to the battery, and wait at least for 2 seconds.
(e) Turn the ignition switch to ON, and wait at least for 20 seconds.
(f) Clear the DTC stored in memory (See page 05–424).
(g) Turn the ignition switch to LOCK, and wait at least for 20 seconds.
(h) Turn the ignition switch to ON, and wait at least for 20 seconds.
(i) Check the DTC (See page 05–424).

OK:

DTC B0105/53 is not output.

HINT:

Codes other than code B0105/53 may be output at this time, but they are not relevant to this check.

NG → **REPLACE INSTRUMENT PANEL PASSENGER AIR BAG ASSY**

OK

USE SIMULATION METHOD TO CHECK

DTC B0106/54 OPEN IN P SQUIB CIRCUIT

CIRCUIT DESCRIPTION

The P squib circuit consists of the airbag sensor assy center and instrument panel passenger airbag assy. It causes the SRS to deploy when the SRS deployment conditions are satisfied.
DTC B0106/54 is recorded when an open is detected in the P squib circuit.

DTC No.	DTC Detecting Condition	Trouble Area
B0106/54	• Open circuit in P+ wire harness or P– wire harness of squib • P squib malfunction • Airbag sensor assy center malfunction	• Instrument panel passenger airbag assy (P squib) • Airbag sensor assy center • Instrument panel wire

WIRING DIAGRAM

See page 05–453.

INSPECTION PROCEDURE

1	CHECK P SQUIB CIRCUIT(AIRBAG SENSOR ASSY CENTER – INSTRUMENT PANEL PASSENGER AIRBAG ASSY)

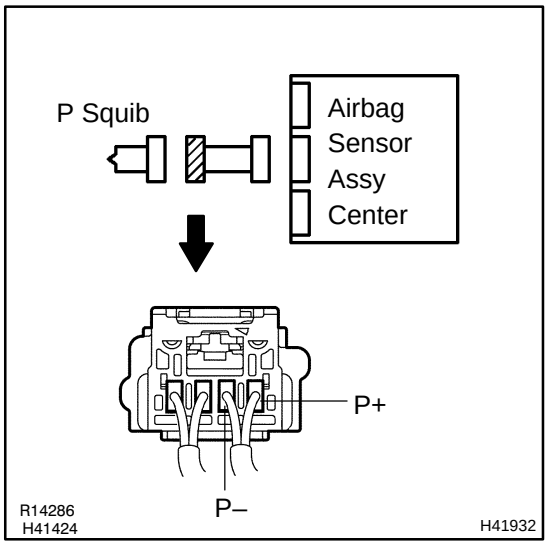

(a) Disconnect the negative (–) terminal cable from the battery, and wait at least for 90 seconds.
(b) Disconnect the connectors between the airbag sensor assy center and the instrument panel passenger airbag assy.
(c) For the connector (on the instrument panel passenger airbag assy side) between the airbag sensor assy center and the instrument panel passenger airbag assy, measure the resistance between P+ and P–.
OK:
Resistance: Below 1 Ω

NG → **REPAIR OR REPLACE INSTRUMENT PANEL WIRE**

OK

2 CHECK AIR BAG SENSOR ASSY CENTER

SST 09843–18040

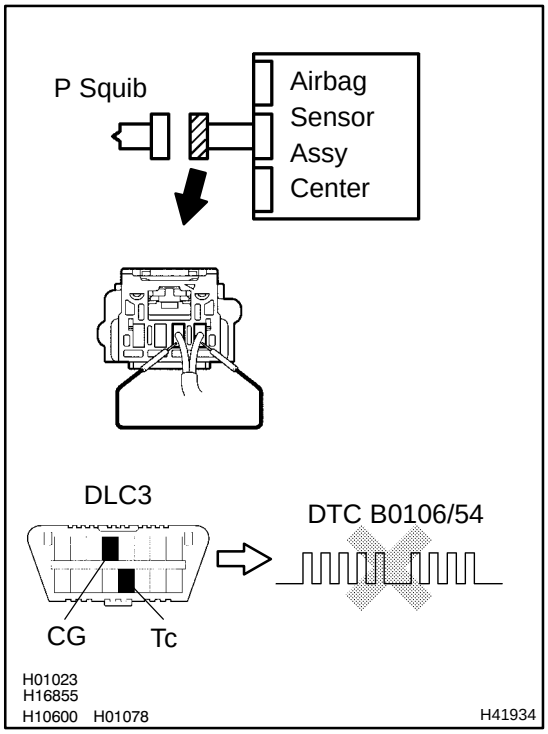

(a) Connect the connector to the airbag sensor assy center.
(b) Using a service wire, connect P+ and P– of the connector (on the instrument panel passenger airbag assy side) between the airbag sensor assy center and the instrument panel passenger airbag assy.
(c) Connect the negative (–) terminal cable to the battery, and wait at least for 2 seconds.
(d) Turn the ignition switch to ON, and wait at least for 20 seconds.
(e) Clear the DTC stored in memory (See page 05–424).
(f) Turn the ignition switch to LOCK, and wait at least for 20 seconds.
(g) Turn the ignition switch to ON, and wait at least for 20 seconds.
(h) Check the DTC (See page 05–424).

OK:

DTC B0106/54 is not output.

HINT:

Codes other than code B0106/54 may be output at this time, but they are not relevant to this check.

NG → **REPLACE AIR BAG SENSOR ASSY CENTER**

OK

3 CHECK P SQUIB

SST 09843–18040

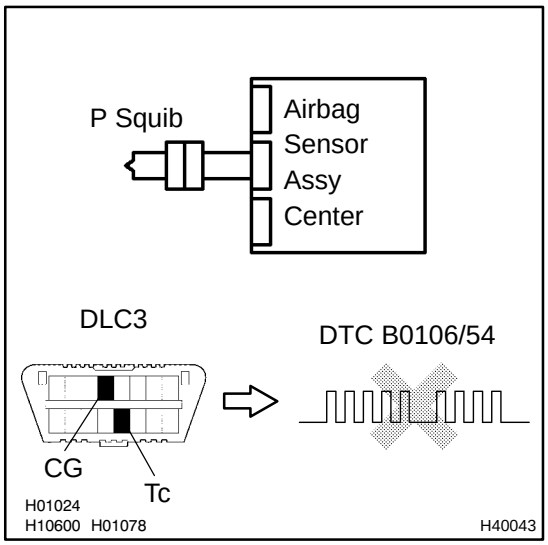

(a) Turn the ignition switch to LOCK.
(b) Disconnect the negative (–) terminal cable from the battery, and wait at least for 90 seconds.
(c) Connect the instrument panel passenger airbag assy connector.
(d) Connect the negative (–) terminal cable to the battery, and wait at least for 2 seconds.
(e) Turn the ignition switch to ON, and wait at least for 20 seconds.
(f) Clear the DTC stored in memory (See page 05–424).
(g) Turn the ignition switch to LOCK, and wait at least for 20 seconds.
(h) Turn the ignition switch to ON, and wait at least for 20 seconds.
(i) Check the DTC (See page 05–424).

OK:

DTC B0106/54 is not output.

HINT:

Codes other than code B0106/54 may be output at this time, but they are not relevant to this check.

NG → **REPLACE INSTRUMENT PANEL PASSENGER AIR BAG ASSY**

OK

USE SIMULATION METHOD TO CHECK

DTC B0107/51 SHORT IN P SQUIB CIRCUIT (TO GROUND)

CIRCUIT DESCRIPTION

The P squib circuit consists of the airbag sensor assy center and instrument panel passenger airbag assy. It causes the SRS to deploy when the SRS deployment conditions are satisfied.
DTC B0107/51 is recorded when ground short is detected in the P squib circuit.

DTC No.	DTC Detecting Condition	Trouble Area
B0107/51	• Short circuit in P squib wire harness (to ground) • P squib malfunction • Airbag sensor assy center malfunction	• Instrument panel passenger airbag assy (P squib) • Airbag sensor assy center • Instrument panel wire

WIRING DIAGRAM

See page 05–453.

INSPECTION PROCEDURE

1	CHECK P SQUIB CIRCUIT(AIRBAG SENSOR ASSY CENTER – INSTRUMENT PANEL PASSENGER AIRBAG ASSY)

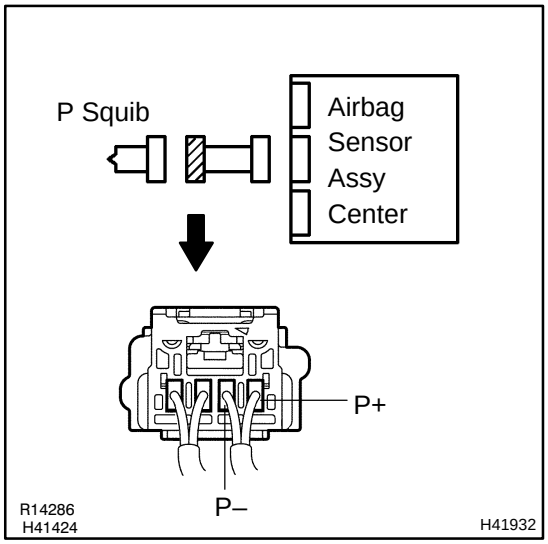

(a) Disconnect the negative (–) terminal cable from the battery, and wait at least for 90 seconds.
(b) Disconnect the connectors between the airbag sensor assy center and the instrument panel passenger airbag assy.
(c) For the connector (on the instrument panel passenger airbag assy side) between the airbag sensor assy center and the instrument panel passenger airbag assy, measure the resistance between P+ and body ground.
OK:
Resistance: 1 MΩ or Higher

NG → **REPAIR OR REPLACE INSTRUMENT PANEL WIRE**

OK

2 CHECK AIR BAG SENSOR ASSY CENTER

SST 09843–18040

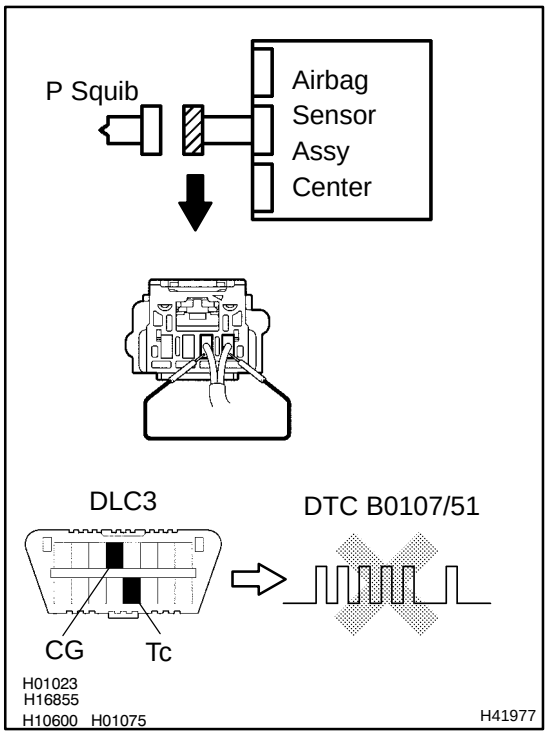

(a) Connect the connector to the airbag sensor assy center.
(b) Using a service wire, connect P+ and P– of the connector (on the instrument panel passenger airbag assy side) between the airbag sensor assy center and the instrument panel passenger airbag assy.
(c) Connect the negative (–) terminal cable to the battery, and wait at least for 2 seconds.
(d) Turn the ignition switch to ON, and wait at least for 20 seconds.
(e) Clear the DTC stored in memory (See page 05–424).
(f) Turn the ignition switch to LOCK, and wait at least for 20 seconds.
(g) Turn the ignition switch to ON, and wait at least for 20 seconds.
(h) Check the DTC (See page 05–424).

OK:

DTC B0107/51 is not output.

HINT:

Codes other than code B0107/51 may be output at this time, but they are not relevant to this check.

NG → **REPLACE AIR BAG SENSOR ASSY CENTER**

OK

3 CHECK P SQUIB

SST 09843–18040

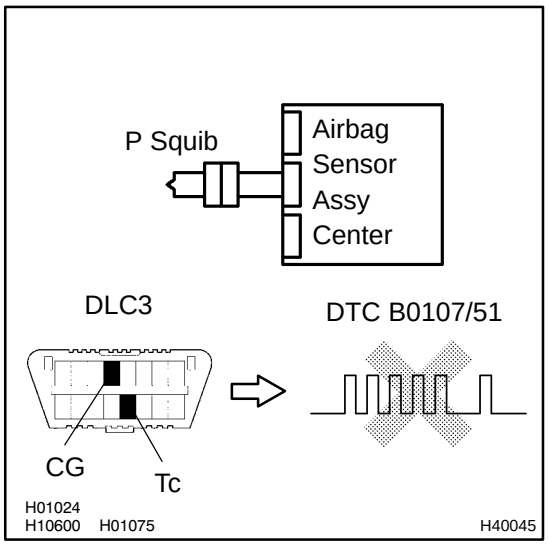

(a) Turn the ignition switch to LOCK.
(b) Disconnect the negative (–) terminal cable from the battery, and wait at least for 90 seconds.
(c) Connect the instrument panel passenger airbag assy connector.
(d) Connect the negative (–) terminal cable to the battery, and wait at least for 2 seconds.
(e) Turn the ignition switch to ON, and wait at least for 20 seconds.
(f) Clear the DTC stored in memory (See page 05–424).
(g) Turn the ignition switch to LOCK, and wait at least for 20 seconds.
(h) Turn the ignition switch to ON, and wait at least for 20 seconds.
(i) Check the DTC (See page 05–424).

OK:

DTC B0107/51 is not output.

HINT:

Codes other than code B0107/51 may be output at this time, but they are not relevant to this check.

NG → **REPLACE INSTRUMENT PANEL PASSENGER AIR BAG ASSY**

OK

4 USE SIMULATION METHOD TO CHECK

NG → **Go to step 1**

OK

REPLACE ALL SRS COMPONENTS INCLUDING THE WIRE HARNESS

DTC B0108/52 SHORT IN P SQUIB CIRCUIT (TO B+)

CIRCUIT DESCRIPTION

The P squib circuit consists of the airbag sensor assy center and instrument panel passenger airbag assy. It causes the SRS to deploy when the SRS deployment conditions are satisfied.
DTC B0108/52 is recorded when a B+ short is detected in the P squib circuit.

DTC No.	DTC Detecting Condition	Trouble Area
B0108/52	• Short circuit in P squib wire harness (to B+) • P squib malfunction • Airbag sensor assy center malfunction	• Instrument panel passenger airbag assy (P squib) • Airbag sensor assy center • Instrument panel wire

WIRING DIAGRAM

See page 05–453.

INSPECTION PROCEDURE

1	CHECK P SQUIB CIRCUIT(AIRBAG SENSOR ASSY CENTER – INSTRUMENT PANEL PASSENGER AIRBAG ASSY)

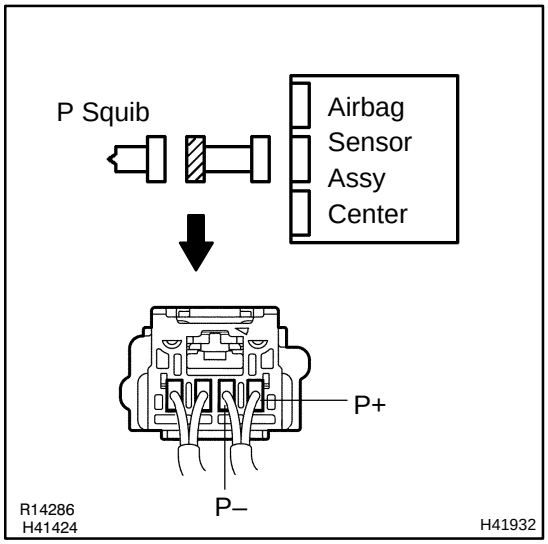

(a) Disconnect the negative (–) terminal cable from the battery, and wait at least for 90 seconds.
(b) Disconnect the connectors between the airbag sensor assy center and the instrument panel passenger airbag assy.
(c) Connect the negative (–) terminal cable to the battery, and wait at least for 2 seconds.
(d) Turn the ignition switch to ON.
(e) For the connector (on the instrument panel passenger airbag assy side) between the airbag sensor assy center and the instrument panel passenger airbag assy, measure the voltage between P+ and body ground.
OK:
Voltage: Below 1 V

NG	REPAIR OR REPLACE INSTRUMENT PANEL WIRE

OK

2 CHECK AIR BAG SENSOR ASSY CENTER

SST 09843–18040

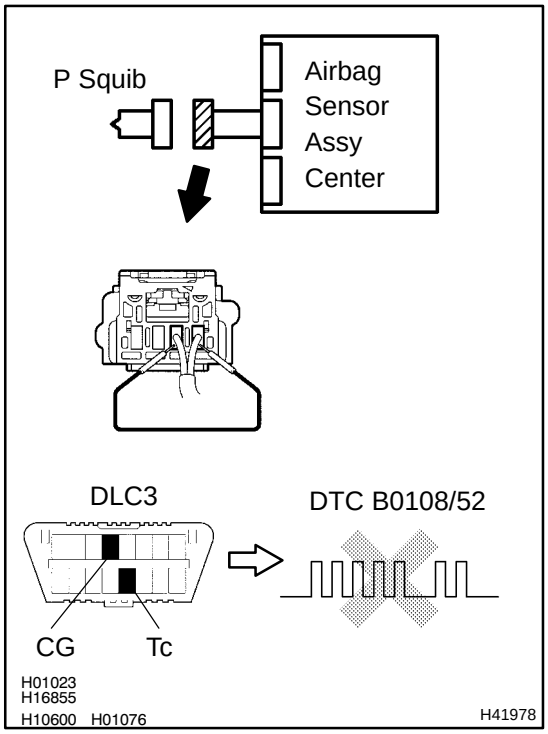

(a) Turn the ignition switch to LOCK.
(b) Disconnect the negative (–) terminal cable from the battery, and wait at least for 90 seconds.
(c) Connect the connector to the airbag sensor assy center.
(d) Using a service wire, connect P+ and P– of the connector (on the instrument panel passenger airbag assy side) between the airbag sensor assy center and the instrument panel passenger airbag assy.
(e) Connect the negative (–) terminal cable to the battery, and wait at least for 2 seconds.
(f) Turn the ignition switch to ON, and wait at least for 20 seconds.
(g) Clear the DTC stored in memory (See page 05–424).
(h) Turn the ignition switch to LOCK, and wait at least for 20 seconds.
(i) Turn the ignition switch to ON, and wait at least for 20 seconds.
(j) Check the DTC (See page 05–424).

OK:

DTC B0108/52 is not output.

HINT:

Codes other than code B0108/52 may be output at this time, but they are not relevant to this check.

NG → **REPLACE AIR BAG SENSOR ASSY CENTER**

OK

3	CHECK P SQUIB

SST 09843–18040

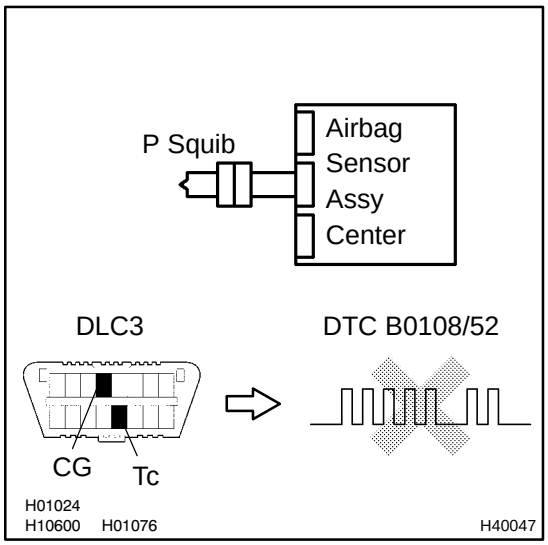

(a) Turn the ignition switch to LOCK.
(b) Disconnect the negative (–) terminal cable from the battery, and wait at least for 90 seconds.
(c) Connect the instrument panel passenger airbag assy connector.
(d) Connect the negative (–) terminal cable to the battery, and wait at least for 2 seconds.
(e) Turn the ignition switch to ON, and wait at least for 20 seconds.
(f) Clear the DTC stored in memory (See page 05–424).
(g) Turn the ignition switch to LOCK, and wait at least for 20 seconds.
(h) Turn the ignition switch to ON, and wait at least for 20 seconds.
(i) Check the DTC (See page 05–424).

OK:

DTC B0108/52 is not output.

HINT:

Codes other than code B0108/52 may be output at this time, but they are not relevant to this check.

NG → **REPLACE INSTRUMENT PANEL PASSENGER AIR BAG ASSY**

OK

4	USE SIMULATION METHOD TO CHECK

NG → **Go to step 1**

OK

REPLACE ALL SRS COMPONENTS INCLUDING THE WIRE HARNESS

DTC B0110/43 SHORT IN SIDE SQUIB (RH) CIRCUIT

CIRCUIT DESCRIPTION

The side squib (RH) circuit consists of the airbag sensor assy center and front seat airbag assy (RH). It causes the SRS to deploy when the SRS deployment conditions are satisfied.
DTC B0110/43 is recorded when a short is detected in the side squib (RH) circuit.

DTC No.	DTC Detecting Condition	Trouble Area
B0110/43	• Short circuit between SFR+ wire harness and SFR– wire harness of squib • Side squib (RH) malfunction • Airbag sensor assy center malfunction	• Front seat airbag assy (RH) • Airbag sensor assy center • Instrument panel wire No.3

WIRING DIAGRAM

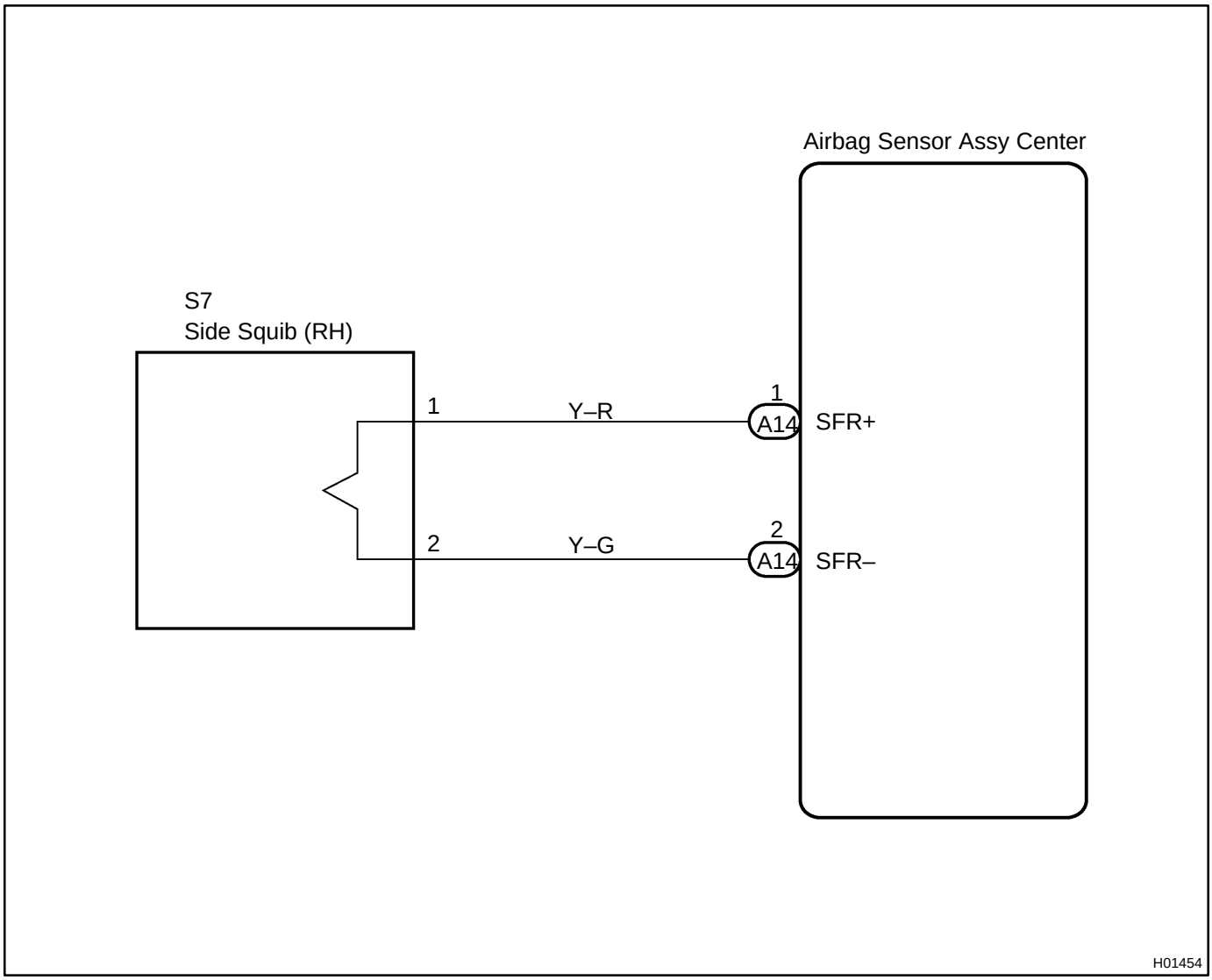

INSPECTION PROCEDURE

1	CHECK SIDE SQUIB(RH) CIRCUIT(AIRBAG SENSOR ASSY CENTER – FRONT SEAT AIRBAG ASSY RH)

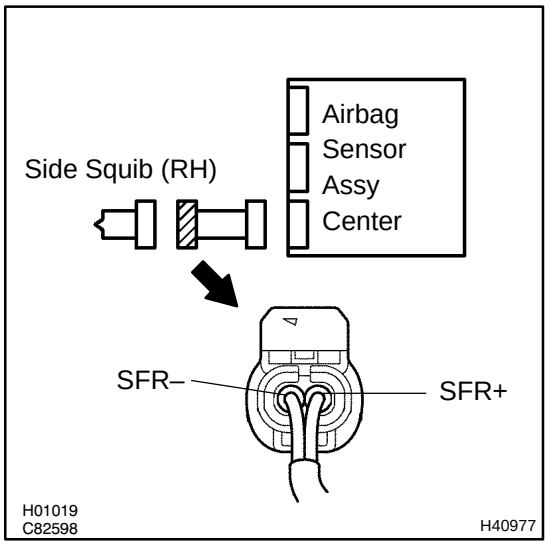

(a) Disconnect the negative (–) terminal cable from the battery, and wait at least for 90 seconds.
(b) Disconnect the connectors between the front seat airbag assy (RH) and the airbag sensor assy center.
(c) Release the airbag activation prevention mechanism of the connector (on the airbag sensor assy center side) between the airbag sensor assy center and the front seat airbag assy (RH) (See page 05–424).
(d) For the connector (on the front seat airbag assy side) between the airbag sensor assy center and the front seat airbag assy (RH), measure the resistance between SFR+ and SFR–.

OK:

Resistance: 1 MΩ or Higher

NG	REPAIR OR REPLACE INSTRUMENT PANEL WIRE NO.3(AIRBAG SENSOR ASSY CENTER – FRONT SEAT AIRBAG ASSY RH)

OK

2	CHECK AIR BAG SENSOR ASSY CENTER

SST 09843–18040

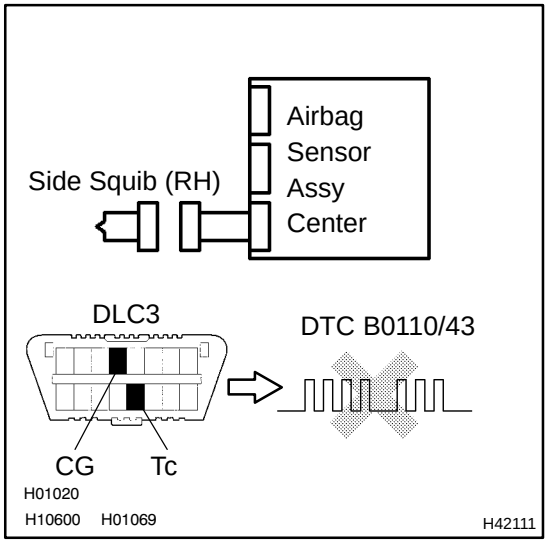

(a) Connect the the connector to the airbag sensor assy center.
(b) Connect the negative (–) terminal cable to the battery, and wait at least for 2 seconds.
(c) Turn the ignition switch to ON, and wait at least for 20 seconds.
(d) Clear the DTC stored in memory (See page 05–424).
(e) Turn the ignition switch to LOCK, and wait at least for 20 seconds.
(f) Turn the ignition switch to ON, and wait at least for 20 seconds.
(g) Check the DTC (See page 05–424).

OK:

DTC B0110/43 is not output.

HINT:

Codes other than code B0110/43 may be output at this time, but they are not relevant to this check.

NG	REPLACE AIR BAG SENSOR ASSY CENTER

OK

3 CHECK SIDE SQUIB(RH)

SST 09843–18040

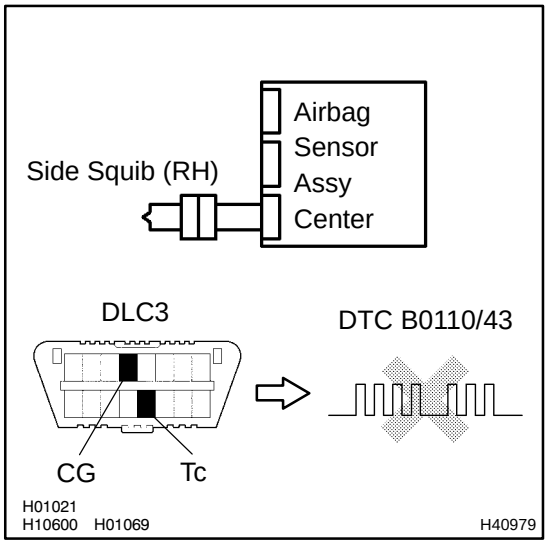

(a) Turn the ignition switch to LOCK.
(b) Disconnect the negative (–) terminal cable from the battery, and wait at least for 90 seconds.
(c) Connect the front seat airbag assy (RH) connector.
(d) Connect the negative (–) terminal cable to the battery, and wait at least for 2 seconds.
(e) Turn the ignition switch to ON, and wait at least for 20 seconds.
(f) Clear the DTC stored in memory (See page 05–424).
(g) Turn the ignition switch to LOCK, and wait at least for 20 seconds.
(h) Turn the ignition switch to ON, and wait at least for 20 seconds.
(i) Check the DTC (See page 05–424).

OK:

DTC B0110/43 is not output.

HINT:

Codes other than code B0110/43 may be output at this time, but they are not relevant to this check.

NG	REPLACE SEPARATE TYPE FRONT SEAT BACK ASSY

OK

USE SIMULATION METHOD TO CHECK

DTC B0111/44 OPEN IN SIDE SQUIB (RH) CIRCUIT

CIRCUIT DESCRIPTION

The side squib (RH) circuit consists of the airbag sensor assy center and front seat airbag assy (RH).
It causes the SRS to deploy when the SRS deployment conditions are satisfied.
DTC B0111/44 is recorded when an open is detected in the side squib (RH) circuit.

DTC No.	DTC Detecting Condition	Trouble Area
B0111/44	• Open circuit in SFR+ wire harness or SFR– wire harness of squib • Side squib (RH) malfunction • Airbag sensor assy center malfunction	• Front seat airbag assy (RH) • Airbag sensor assy center • Instrument panel wire No.3

WIRING DIAGRAM

See page 05–466.

INSPECTION PROCEDURE

1	CHECK SIDE SQUIB(RH) CIRCUIT(AIRBAG SENSOR ASSY CENTER – FRONT SEAT AIRBAG ASSY RH)

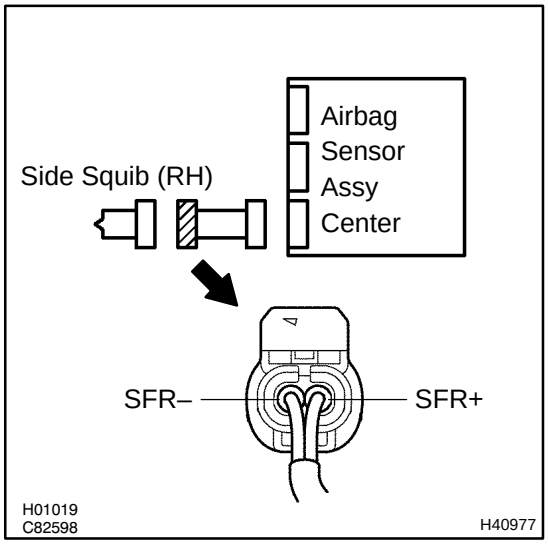

(a) Disconnect the negative (–) terminal cable from the battery, and wait at least for 90 seconds.
(b) Disconnect the connectors between the airbag sensor assy center and the front seat airbag assy (RH).
(c) For the connector (on the front seat airbag assy side) between the airbag sensor assy center and the front seat airbag assy (RH), measure the resistance between SFR+ and SFR–.
OK:
Resistance: Below 1 Ω

NG → **REPAIR OR REPLACE INSTRUMENT PANEL WIRE NO.3(AIRBAG SENSOR ASSY CENTER – FRONT SEAT AIRBAG ASSY RH)**

OK

2 CHECK AIR BAG SENSOR ASSY CENTER

SST 09843–18040

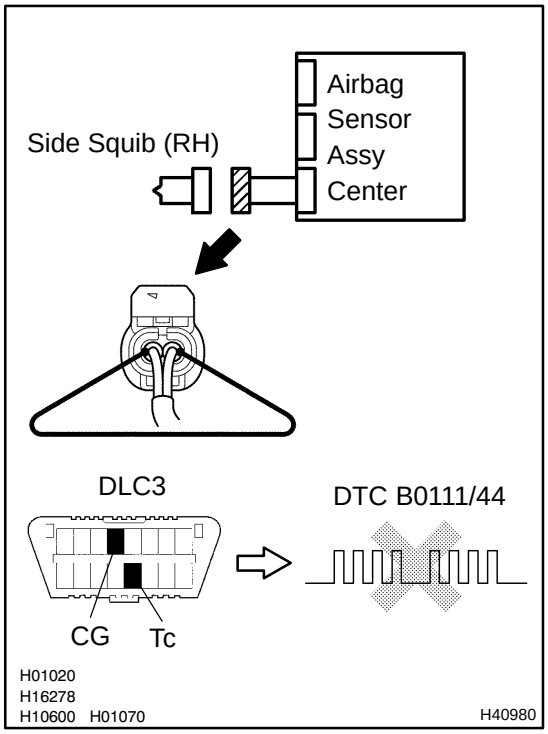

(a) Connect the connector to the airbag sensor assy center.
(b) Using a service wire, connect SFR+ and SFR– of the connector (on the front seat airbag assy side) between the airbag sensor assy center and the front seat airbag assy (RH).
(c) Connect the negative (–) terminal cable to the battery, and wait at least for 2 seconds.
(d) Turn the ignition switch to ON, and wait at least for 20 seconds.
(e) Clear the DTC stored in memory (See page 05–424).
(f) Turn the ignition switch to LOCK, and wait at least for 20 seconds.
(g) Turn the ignition switch to ON, and wait at least for 20 seconds.
(h) Check the DTC (See page 05–424).

OK:

DTC B0111/44 is not output.

HINT:

Codes other than code B0111/44 may be output at this time, but they are not relevant to this check.

NG → **REPLACE AIR BAG SENSOR ASSY CENTER**

OK

3 CHECK SIDE SQUIB(RH)

SST 09843–18040

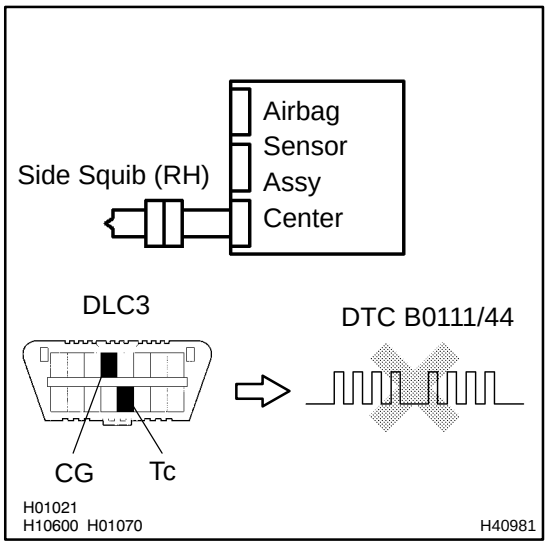

(a) Turn the ignition switch to LOCK.
(b) Disconnect the negative (–) terminal cable from the battery, and wait at least for 90 seconds.
(c) Connect the front seat airbag assy (RH) connector.
(d) Connect the negative (–) terminal cable to the battery, and wait at least for 2 seconds.
(e) Turn the ignition switch to ON, and wait at least for 20 seconds.
(f) Clear the DTC stored in memory (See page 05–424).
(g) Turn the ignition switch to LOCK, and wait at least for 20 seconds.
(h) Turn the ignition switch to ON, and wait at least for 20 seconds.
(i) Check the DTC (See page 05–424).

OK:

DTC B0111/44 is not output.

HINT:

Codes other than code B0111/44 may be output at this time, but they are not relevant to this check.

NG → **REPLACE SEPARATE TYPE FRONT SEAT BACK ASSY**

OK

USE SIMULATION METHOD TO CHECK

DTC	B0113/42	SHORT IN SIDE SQUIB (RH) CIRCUIT (TO B+)

CIRCUIT DESCRIPTION

The side squib (RH) circuit consists of the airbag sensor assy center and front seat airbag assy (RH).
It causes the SRS to deploy when the SRS deployment conditions are satisfied.
DTC B0113/42 is recorded when a B+ short is detected in the side squib (RH) circuit.

DTC No.	DTC Detecting Condition	Trouble Area
B0113/42	• Short circuit in side squib (RH) wire harness (to B+) • Side squib (RH) malfunction • Airbag sensor assy center malfunction	• Front seat airbag assy (RH) • Airbag sensor assy center • Instrument panel wire No.3

WIRING DIAGRAM

See page 05–466.

INSPECTION PROCEDURE

1	CHECK SIDE SQUIB(RH) CIRCUIT(AIRBAG SENSOR ASSY CENTER – FRONT SEAT AIRBAG ASSY RH)

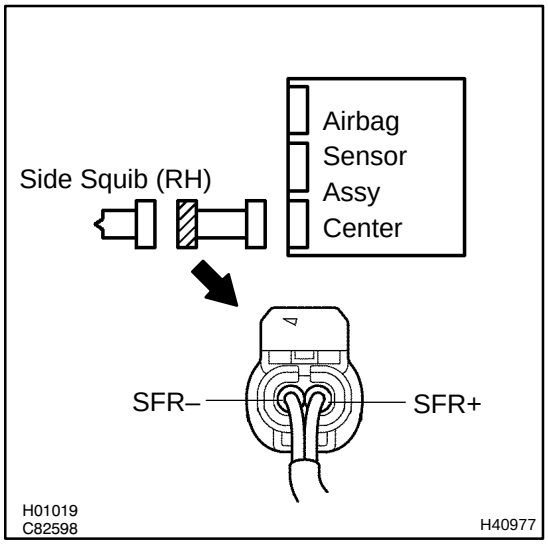

(a) Disconnect the negative (–) terminal cable from the battery, and wait at least for 90 seconds.
(b) Disconnect the connectors between the airbag sensor assy center and the front seat airbag assy (RH).
(c) Connect the negative (–) terminal cable to the battery, and wait at least for 2 seconds.
(d) Turn the ignition switch to ON.
(e) For the connector (on the front seat airbag assy side) between the airbag sensor assy center and the front seat airbag assy (RH), measure the voltage between SFR+ and body ground.
OK:
Voltage: Below 1 V

NG → **REPAIR OR REPLACE INSTRUMENT PANEL WIRE NO.3(AIRBAG SENSOR ASSY CENTER – FRONT SEAT AIRBAG ASSY RH)**

OK

2 CHECK AIR BAG SENSOR ASSY CENTER

SST 09843–18040

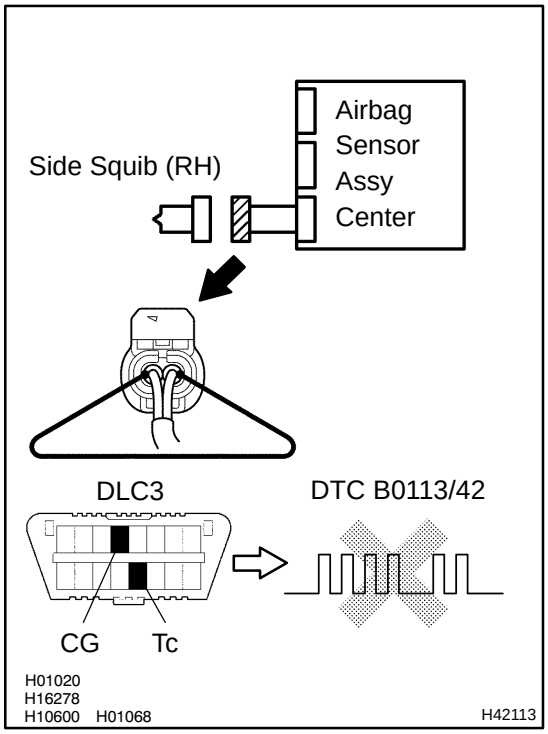

(a) Turn the ignition switch to LOCK.
(b) Disconnect the negative (–) terminal cable from the battery, and wait at least for 90 seconds.
(c) Connect the connector to the airbag sensor assy center.
(d) Using a service wire, connect SFR+ and SFR– of the connector (on the front front seat airbag assy side) between the airbag sensor assy center and the front seat airbag assy (RH).
(e) Connect the negative (–) terminal cable to the battery, and wait at least for 2 seconds.
(f) Turn the ignition switch to ON, and wait at least for 20 seconds.
(g) Clear the DTC stored in memory (See page 05–424).
(h) Turn the ignition switch to LOCK, and wait at least for 20 seconds.
(i) Turn the ignition switch to ON, and wait at least for 20 seconds.
(j) Check the DTC (See page 05–424).

OK:

DTC B0113/42 is not output.

HINT:

Codes other than code B0113/42 may be output at this time, but they are not relevant to this check.

NG → **REPLACE AIR BAG SENSOR ASSY CENTER**

OK

3	CHECK SIDE SQUIB(RH)

SST 09843–18040

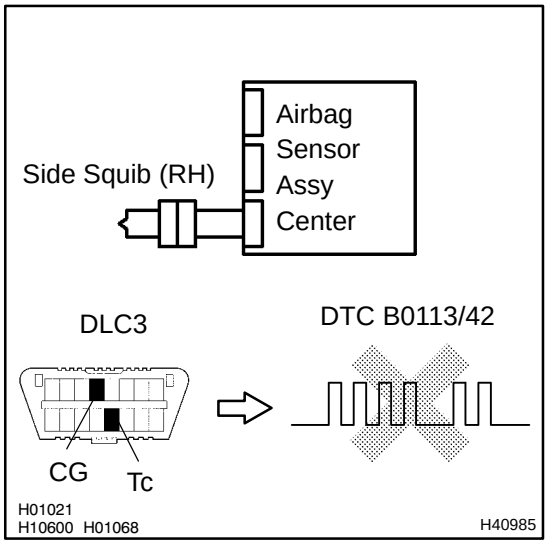

(a) Turn the ignition switch to LOCK.
(b) Disconnect the negative (–) terminal cable from the battery, and wait at least for 90 seconds.
(c) Connect the front seat airbag assy (RH) connector.
(d) Connect the negative (–) terminal cable to the battery, and wait at least for 2 seconds.
(e) Turn the ignition switch to ON, and wait at least for 20 seconds.
(f) Clear the DTC stored in memory (See page 05–424).
(g) Turn the ignition switch to LOCK, and wait at least for 20 seconds.
(h) Turn the ignition switch to ON, and wait at least for 20 seconds.
(i) Check the DTC (See page 05–424).

OK:

DTC B0113/42 is not output.

HINT:

Codes other than code B0113/42 may be output at this time, but they are not relevant to this check.

NG → **REPLACE SEPARATE TYPE FRONT SEAT BACK ASSY**

OK

4	USE SIMULATION METHOD TO CHECK

NG → **Go to step 1**

OK

REPLACE ALL SRS COMPONENTS INCLUDING THE WIRE HARNESS

DTC B0115/47 SHORT IN SIDE SQUIB (LH) CIRCUIT

CIRCUIT DESCRIPTION

The side squib (LH) circuit consists of the airbag sensor assy center and front seat airbag assy (LH).
It causes the SRS to deploy when the SRS deployment conditions are satisfied.
DTC B0115/47 is recorded when a short is detected in the side squib (LH) circuit.

DTC No.	DTC Detecting Condition	Trouble Area
B0115/47	• Short circuit between SFL+ wire harness and SFL– wire harness of squib • Side squib (LH) malfunction • Airbag sensor assy center malfunction	• Front seat airbag assy (LH) • Airbag sensor assy center • Instrument panel wire No.3

WIRING DIAGRAM

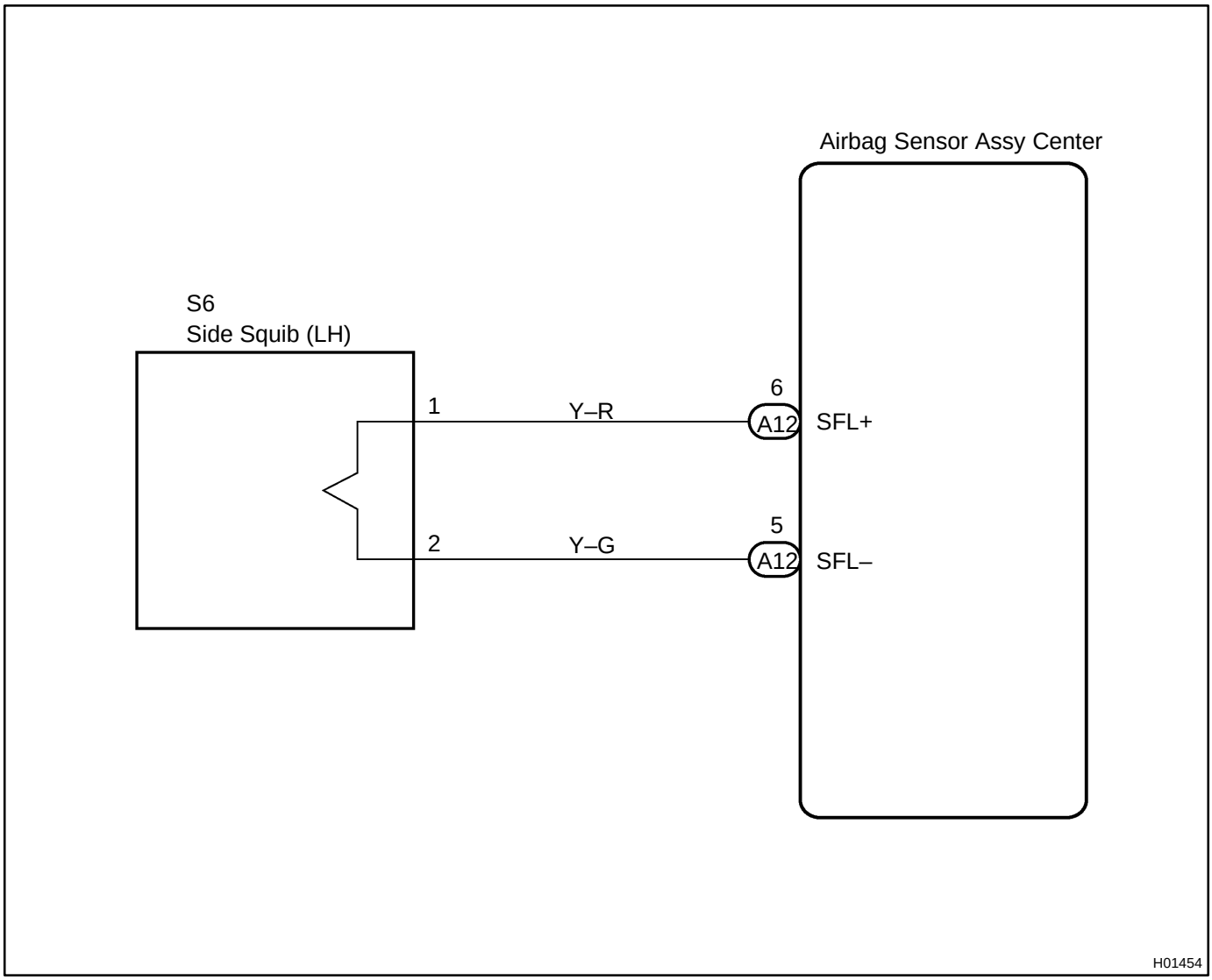

INSPECTION PROCEDURE

1	CHECK SIDE SQUIB(LH) CIRCUIT(AIRBAG SENSOR ASSY CENTER – FRONT SEAT AIRBAG ASSY LH)

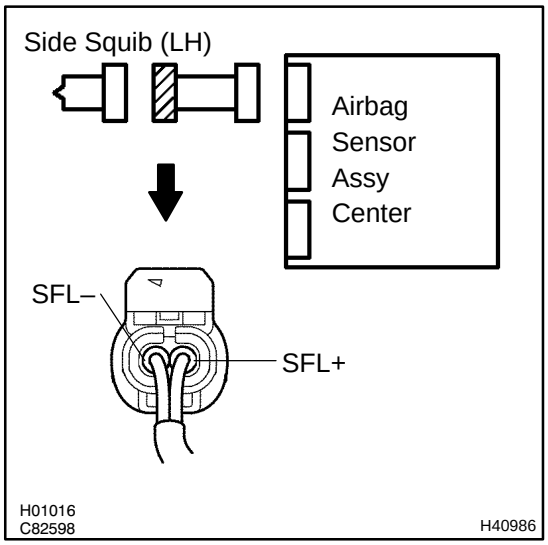

(a) Disconnect the negative (–) terminal cable from the battery, and wait at least for 90 seconds.
(b) Disconnect the connectors between the airbag sensor assy center and the front seat airbag assy (LH).
(c) Release the airbag activation prevention mechanism of the connector (on the airbag sensor assy center side) between the airbag sensor assy center and the front seat airbag assy (LH) (See page 05–424).
(d) For the connector (on the front seat airbag assy side) between the airbag sensor assy center and the front seat airbag assy (LH), measure the resistance between SFL+ and SFL–.

OK:

Resistance: 1 MΩ or Higher

NG	REPAIR OR REPLACE INSTRUMENT PANEL WIRE NO.3

OK

2	CHECK AIR BAG SENSOR ASSY CENTER

SST 09843–18040

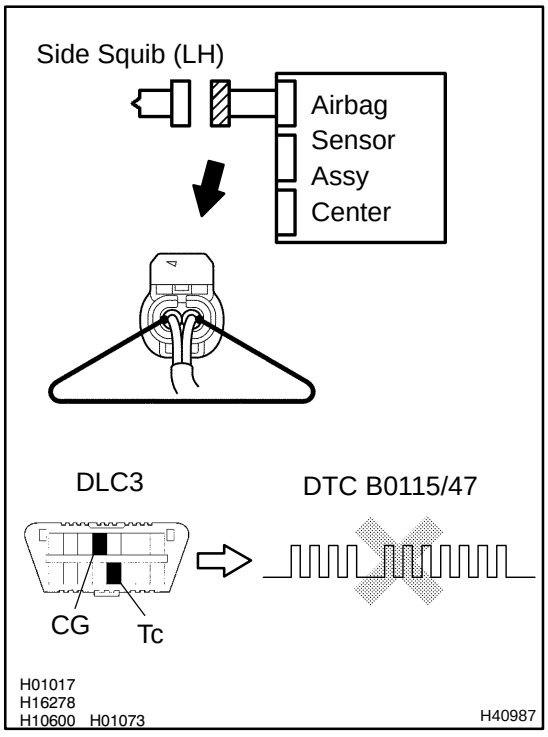

(a) Connect the connector to the airbag sensor assy center.
(b) Using a service wire, connect SFL+ and SFL– of the connector (on the front seat airbag assy side) between the airbag sensor assy center and the front seat airbag assy (LH).
(c) Connect the negative (–) terminal cable to the battery, and wait at least for 2 seconds.
(d) Turn the ignition switch to ON, and wait at least for 20 seconds.
(e) Clear the DTC stored in memory (See page 05–424).
(f) Turn the ignition switch to LOCK, and wait at least for 20 seconds.
(g) Turn the ignition switch to ON, and wait at least for 20 seconds.
(h) Check the DTC (See page 05–424).

OK:

DTC B0115/47 is not output.

HINT:

Codes other than code B0115/47 may be output at this time, but they are not relevant to this check.

NG	REPLACE AIR BAG SENSOR ASSY CENTER

OK

3 CHECK SIDE SQUIB(LH)

SST 09843–18040

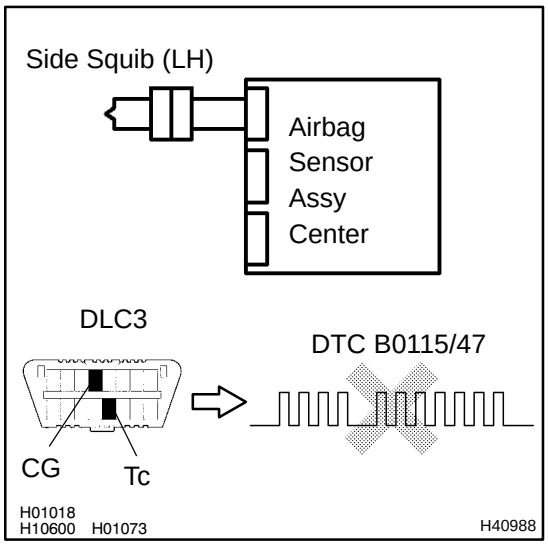

(a) Turn the ignition switch to LOCK.
(b) Disconnect the negative (–) terminal cable from the battery, and wait at least for 90 seconds.
(c) Connect the front seat airbag assy (LH) connector.
(d) Connect the negative (–) terminal cable to the battery, and wait at least for 2 seconds.
(e) Turn the ignition switch to ON, and wait at least for 20 seconds.
(f) Clear the DTC stored in memory (See page 05–424).
(g) Turn the ignition switch to LOCK, and wait at least for 20 seconds.
(h) Turn the ignition switch to ON, and wait at least for 20 seconds.
(i) Check the DTC (See page 05–424).

OK:

DTC B0115/47 is not output.

HINT:

Codes other than code B0115/47 may be output at this time, but they are not relevant to this check.

NG → **REPLACE SEPARATE TYPE FRONT SEAT BACK ASSY**

OK

USE SIMULATION METHOD TO CHECK

DTC B0116/48 OPEN IN SIDE SQUIB (LH) CIRCUIT

CIRCUIT DESCRIPTION

The side squib (LH) circuit consists of the airbag sensor assy center and front seat airbag assy (LH).
It causes the SRS to deploy when the SRS deployment conditions are satisfied.
DTC B0116/48 is recorded when an open is detected in the side squib (LH) circuit.

DTC No.	DTC Detecting Condition	Trouble Area
B0116/48	• Open circuit in SFL+ wire harness or SFL– wire harness of squib • Side squib (LH) malfunction • Airbag sensor assy center malfunction	• Front seat airbag assy (LH) • Airbag sensor assy center • Instrument panel wire No.3

WIRING DIAGRAM

See page 05–478.

INSPECTION PROCEDURE

1	CHECK SIDE SQUIB(LH) CIRCUIT(AIRBAG SENSOR ASSY CENTER – FRONT SEAT AIRBAG ASSY LH)

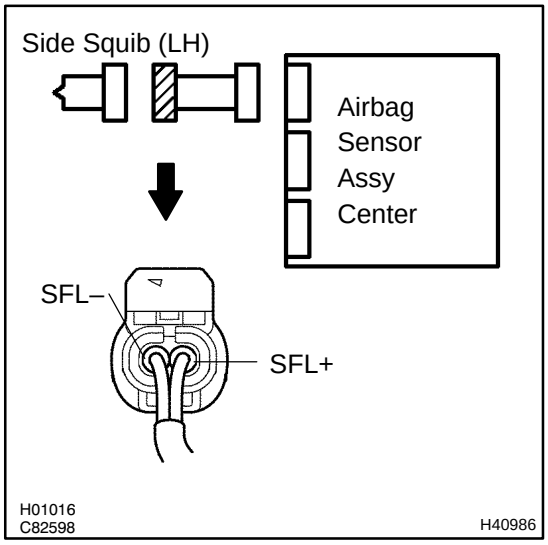

(a) Disconnect the negative (–) terminal cable from the battery, and wait at least for 90 seconds.
(b) Disconnect the connectors between the airbag sensor assy center and the front seat airbag assy (LH).
(c) For the connector (on the front seat airbag assy side) between the airbag sensor assy center and the front seat airbag assy (LH), measure the resistance between SFL+ and SFL–.
OK:
Resistance: Below 1 Ω

NG → **REPAIR OR REPLACE INSTRUMENT PANEL WIRE NO.3(AIRBAG SENSOR ASSY CENTER – FRONT SEAT AIRBAG ASSY LH)**

OK

2 CHECK AIR BAG SENSOR ASSY CENTER

SST 09843–18040

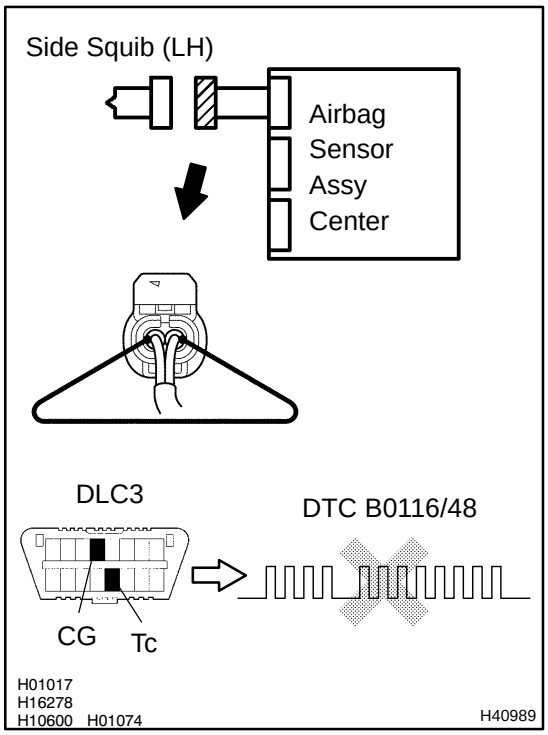

(a) Connect the connector to the airbag sensor assy center.
(b) Using a service wire, connect SFL+ and SFL– of the connector (on the front seat airbag assy side) between the airbag sensor assy center and the front seat airbag assy (LH).
(c) Connect the negative (–) terminal cable to the battery, and wait at least 2 seconds.
(d) Turn the ignition switch to ON, and wait at least for 20 seconds.
(e) Clear the DTC stored in memory (See page 05–424).
(f) Turn the ignition switch to LOCK, and wait at least for 20 seconds.
(g) Turn the ignition switch to ON, and wait at least for 20 seconds.
(h) Check the DTC (See page 05–424).

OK:

DTC B0116/48 is not output.

HINT:

Codes other than code B0116/48 may be output at this time, but they are not relevant to this check.

NG → **REPLACE AIR BAG SENSOR ASSY CENTER**

OK

3 CHECK SIDE SQUIB(LH)

SST 09843–18040

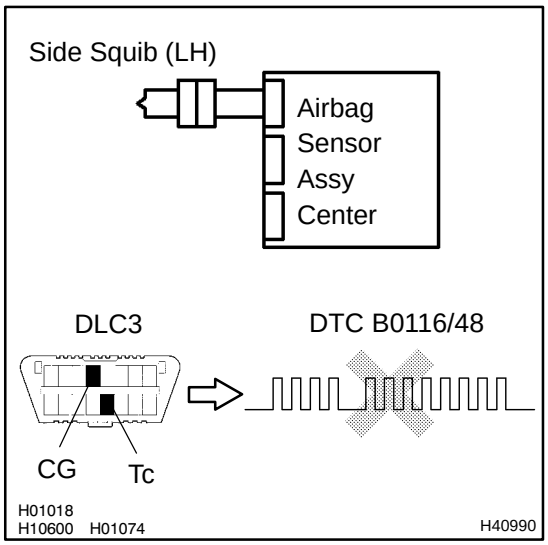

(a) Turn the ignition switch to LOCK.
(b) Disconnect the negative (–) terminal cable from the battery, and wait at least for 90 seconds.
(c) Connect the front seat airbag assy (LH) connector.
(d) Connect the negative (–) terminal cable to the battery, and wait at least for 2 seconds.
(e) Turn the ignition switch to ON, and wait at least for 20 seconds.
(f) Clear the DTC stored in memory (See page 05–424).
(g) Turn the ignition switch to LOCK, and wait at least for 20 seconds.
(h) Turn the ignition switch to ON, and wait at least for 20 seconds.
(i) Check the DTC (See page 05–424).

OK:

DTC B0116/48 is not output.

HINT:

Codes other than code B0116/48 may be output at this time, but they are not relevant to this check.

NG → **REPLACE SEPARATE TYPE FRONT SEAT BACK ASSY**

OK

USE SIMULATION METHOD TO CHECK

DTC	B0117/45	SHORT IN SIDE SQUIB (LH) CIRCUIT (TO GROUND)

CIRCUIT DESCRIPTION

The side squib (LH) circuit consists of the airbag sensor assy center and front seat airbag assy (LH).
It causes the SRS to deploy when the SRS deployment conditions are satisfied.
DTC B0117/45 is recorded when a ground short is detected in the side squib (LH) circuit.

DTC No.	DTC Detecting Condition	Trouble Area
B0117/45	• Short circuit in side squib (LH) wire harness (to ground) • Side squib (LH) malfunction • Airbag sensor assy center malfunction	• Front seat airbag assy (LH) • Airbag sensor assy center • Instrument panel wire No.3

WIRING DIAGRAM

See page 05–478.

INSPECTION PROCEDURE

1	CHECK SIDE SQUIB(LH) CIRCUIT(AIRBAG SENSOR ASSY CENTER – FRONT SEAT AIRBAG ASSY LH)

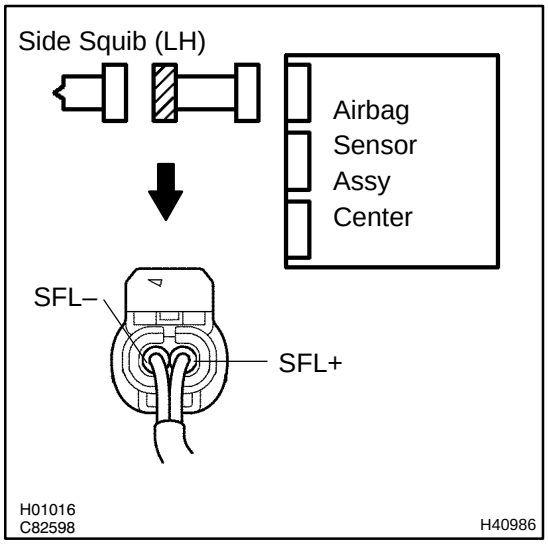

(a) Disconnect the negative (–) terminal cable from the battery, and wait at least for 90 seconds.
(b) Disconnect the connectors between the airbag sensor assy center and the front seat airbag assy (LH).
(c) For the connector (on the front seat airbag assy side) between the airbag sensor assy center and the front seat airbag assy (LH), measure the resistance between SFL+ and body ground.
OK:
Resistance: 1 MΩ or Higher

NG → **REPAIR OR REPLACE INSTRUMENT PANEL WIRE NO.3(AIRBAG SENSOR ASSY CENTER – FRONT SEAT AIRBAG ASSY LH)**

OK

2 CHECK AIR BAG SENSOR ASSY CENTER

SST 09843–18040

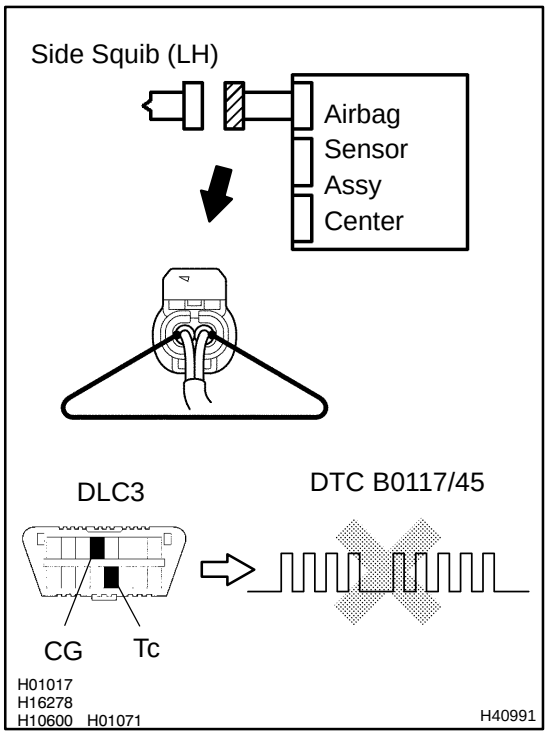

(a) Connect the connector to the airbag sensor assy center.
(b) Using a service wire, connect SFL+ and SFL– of the connector (on the front seat airbag assy side) between the airbag sensor assy center and the front seat airbag assy (LH).
(c) Connect the negative (–) terminal cable to the battery, and wait at least for 2 seconds.
(d) Turn the ignition switch to ON, and wait at least for 20 seconds.
(e) Clear the DTC stored in memory (See page 05–424).
(f) Turn the ignition switch to LOCK, and wait at least for 20 seconds.
(g) Turn the ignition switch to ON, and wait at least for 20 seconds.
(h) Check the DTC (See page 05–424).

OK:

DTC B0117/45 is not output.

HINT:

Codes other than code B0117/45 may be output at this time, but they are not relevant to this check.

NG → **REPLACE AIR BAG SENSOR ASSY CENTER**

OK

3	CHECK SIDE SQUIB(LH)

SST 09843–18040

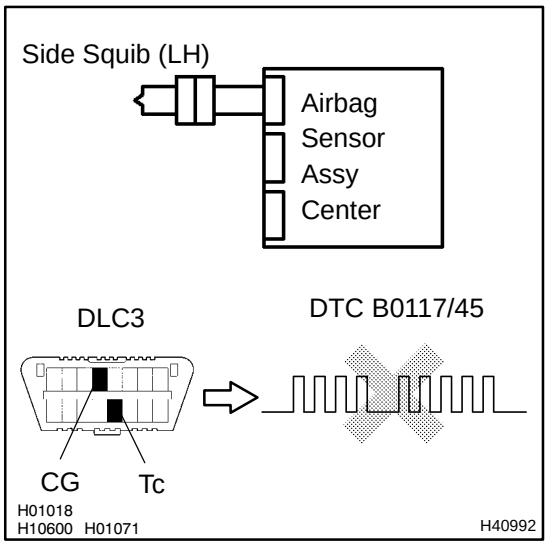

(a) Turn the ignition switch to LOCK.
(b) Disconnect the negative (–) terminal cable from the battery, and wait at least for 90 seconds.
(c) Connect the front front seat airbag assy (LH) connector.
(d) Connect the negative (–) terminal cable to the battery, and wait at least for 2 seconds.
(e) Turn the ignition switch to ON, and wait at least for 20 seconds.
(f) Clear the DTC stored in memory (See page 05–424).
(g) Turn the ignition switch to LOCK, and wait at least for 20 seconds.
(h) Turn the ignition switch to ON, and wait at least for 20 seconds.
(i) Check the DTC (See page 05–424).

OK:

DTC B0117/45 is not output.

HINT:

Codes other than code B0117/45 may be output at this time, but they are not relevant to this check.

NG	REPLACE SEPARATE TYPE FRONT SEAT BACK ASSY

OK

4	USE SIMULATION METHOD TO CHECK

NG	Go to step 1

OK

REPLACE ALL SRS COMPONENTS INCLUDING THE WIRE HARNESS

DTC	B0118/46	SHORT IN SIDE SQUIB (LH) CIRCUIT (TO B+)

CIRCUIT DESCRIPTION

The side squib (LH) circuit consists of the airbag sensor assy center and front seat airbag assy (LH).
It causes the SRS to deploy when the SRS deployment conditions are satisfied.
DTC B0118/46 is recorded when a B+ short is detected in the side squib (LH) circuit.

DTC No.	DTC Detecting Condition	Trouble Area
B0118/46	• Short circuit in side squib (LH) wire harness (to B+) • Side squib (LH) malfunction • Airbag sensor assy center malfunction	• Front seat airbag assy (LH) • Airbag sensor assy center • Instrument panel wire No.3

WIRING DIAGRAM

See page 05–478.

INSPECTION PROCEDURE

1	CHECK SIDE SQUIB(LH) CIRCUIT(AIRBAG SENSOR ASSY CENTER – FRONT SEAT AIRBAG ASSY LH)

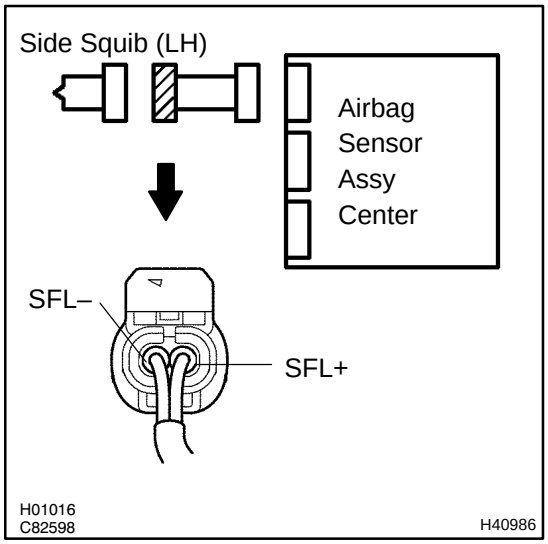

(a) Disconnect the negative (–) terminal cable from the battery, and wait at least for 90 seconds.
(b) Disconnect the connectors between the airbag sensor assy center and the front seat airbag assy (LH).
(c) Connect the negative (–) terminal cable to the battery, and wait at least for 2 seconds.
(d) Turn the ignition switch to ON.
(e) For the connector (on the front seat airbag assy side) between the airbag sensor assy center and the front seat airbag assy (LH), measure the voltage between SFL+ and body ground.
OK:
Voltage: Below 1 V

NG → **REPAIR OR REPLACE INSTRUMENT PANEL WIRE NO.3(AIRBAG SENSOR ASSY CENTER – FRONT SEAT AIRBAG ASSY LH)**

OK

2 CHECK AIR BAG SENSOR ASSY CENTER

SST 09843–18040

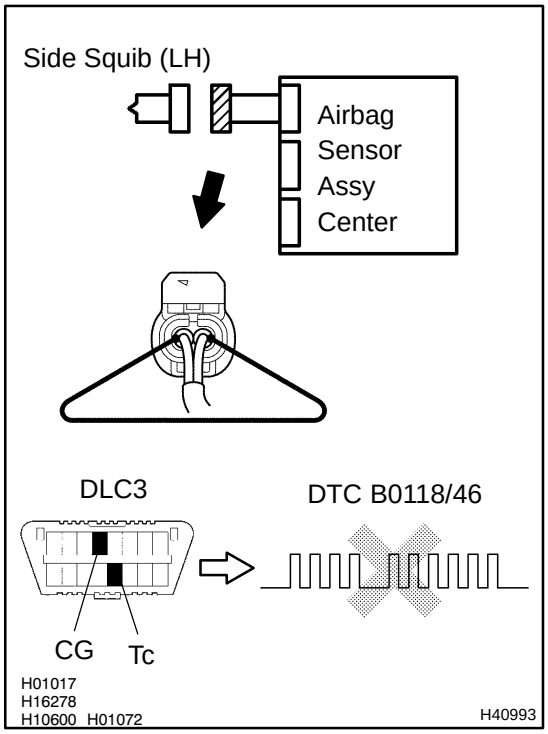

(a) Turn the ignition switch to LOCK.
(b) Disconnect the negative (–) terminal cable from the battery, and wait at least for 90 seconds.
(c) Connect the connector to the airbag sensor assy center.
(d) Using a service wire, connect SFL+ and SFL– of the connector (on the front seat airbag assy side) between the airbag sensor assy center and the front seat airbag assy (LH).
(e) Connect the negative (–) terminal cable to the battery, and wait at least for 2 seconds.
(f) Turn the ignition switch to ON, and wait at least for 20 seconds.
(g) Clear the DTC stored in memory (See page 05–424).
(h) Turn the ignition switch to LOCK, and wait at least for 20 seconds.
(i) Turn the ignition switch to ON, and wait at least for 20 seconds.
(j) Check the DTC (See page 05–424).

OK:

DTC B0118/46 is not output.

HINT:

Codes other than code B0118/46 may be output at this time, but they are not relevant to this check.

NG → **REPLACE AIR BAG SENSOR ASSY CENTER**

OK

3 CHECK SIDE SQUIB(LH)

SST 09843–18040

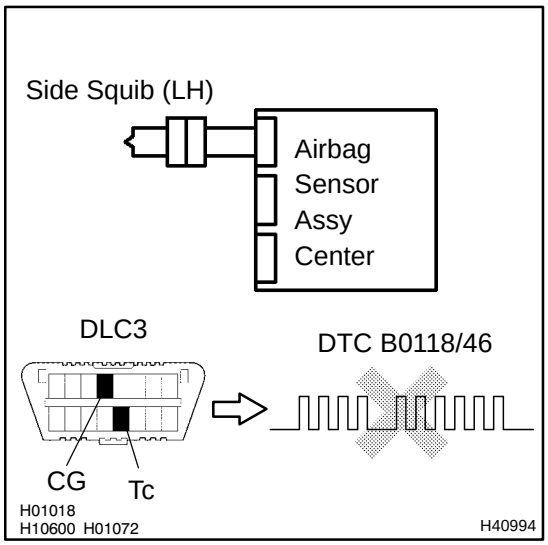

(a) Turn the ignition switch to LOCK.
(b) Disconnect the negative (–) terminal cable from the battery, and wait at least for 90 seconds.
(c) Connect the front seat airbag assy (LH) connector.
(d) Connect the negative (–) terminal cable to the battery, and wait at least for 2 seconds.
(e) Turn the ignition switch to ON, and wait at least for 20 seconds.
(f) Clear the DTC stored in memory (See page 05–424).
(g) Turn the ignition switch to LOCK, and wait at least for 20 seconds.
(h) Turn the ignition switch to ON, and wait at least for 20 seconds.
(i) Check the DTC (See page 05–424).

OK:

DTC B0118/46 is not output.

HINT:

Codes other than code B0118/46 may be output at this time, but they are not relevant to this check.

NG → **REPLACE SEPARATE TYPE FRONT SEAT BACK ASSY**

OK

4 USE SIMULATION METHOD TO CHECK

NG → **Go to step 1**

OK

REPLACE ALL SRS COMPONENTS INCLUDING THE WIRE HARNESS

DTC	B0126/27	SEAT BELT BUCKLE SWITCH (LH) MALFUNCTION

DTC	B0127/27	SEAT BELT BUCKLE SWITCH (LH) MALFUNCTION

CIRCUIT DESCRIPTION

The seat belt buckle switch (LH) circuit consists of the airbag sensor assy center and front seat inner belt assy (LH).

DTC B0126/B0127/27 is recorded when a malfunction is detected in the seat belt buckle switch (LH) circuit.

DTC No.	DTC Detecting Condition	Trouble Area
B0126/B0127/27	• Short circuit in LBE+ wire harness (to ground) • Short circuit in LBE+ wire harness (to B+) • Open circuit in LBE+ wire harness • Front seat inner belt assy (LH) malfunction • Airbag sensor assy center malfunction	• Front seat inner belt assy (LH) • Airbag sensor assy center • Instrument panel wire No.3

WIRING DIAGRAM

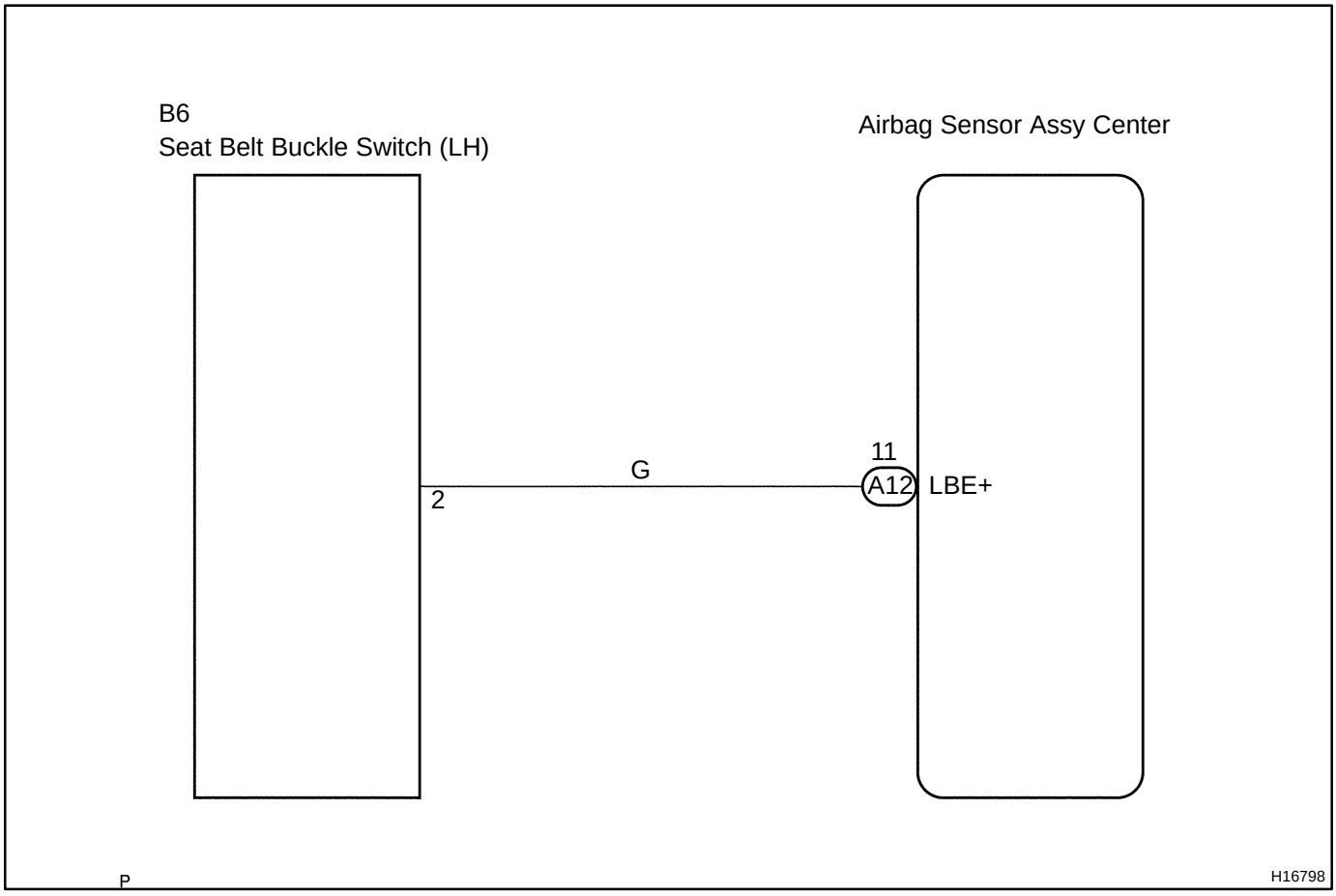

INSPECTION PROCEDURE

1	CHECK WIRE HARNESS(AIRBAG SENSOR ASSY CENTER – FRONT SEAT INNER BELT ASSY LH)

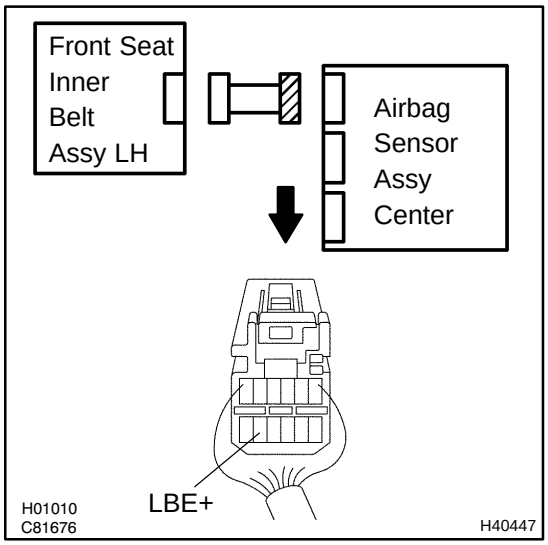

(a) Disconnect the negative (–) terminal cable from the battery, and wait at least for 90 seconds.
(b) Disconnect the connectors between the airbag sensor assy center and the front seat inner belt assy (LH).
(c) For the connector (on the airbag sensor assy center side) between the airbag sensor assy center and the front seat inner belt assy (LH), measure the resistance between LBE+ and body ground.
OK:
Resistance: 1 MΩ or Higher

NG → **REPAIR OR REPLACE INSTRUMENT PANEL WIRE NO.3 (AIRBAG SENSOR ASSY CENTER – FRONT SEAT INNER BELT ASSY LH)**

OK

2	CHECK WIRE HARNESS(AIRBAG SENSOR ASSY CENTER – FRONT SEAT INNER BELT ASSY LH)

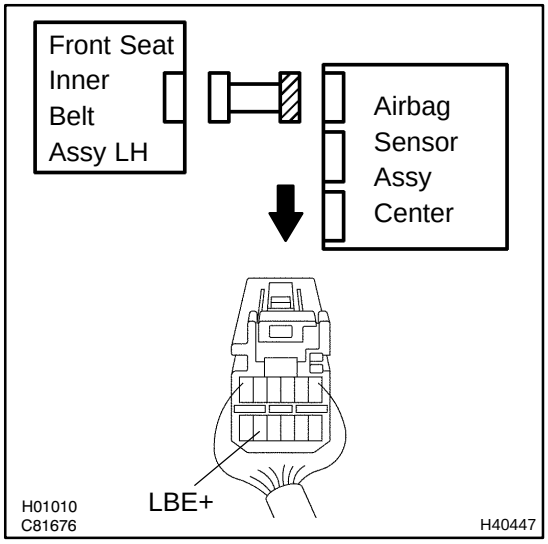

(a) Connect the negative (–) terminal cable to the battery, and wait at least for 2 seconds.
(b) Turn the ignition switch to ON.
(c) For the connector (on the airbag sensor assy center side) between the airbag sensor assy center and the front seat inner belt assy (LH), measure the voltage between LBE+ and body ground.
OK:
Voltage: Below 1 V

NG → **REPAIR OR REPLACE INSTRUMENT PANEL WIRE NO.3 (AIRBAG SENSOR ASSY CENTER – FRONT SEAT INNER BELT ASSY LH)**

OK

3	CHECK FRONT SEAT INNER BELT ASSY LH

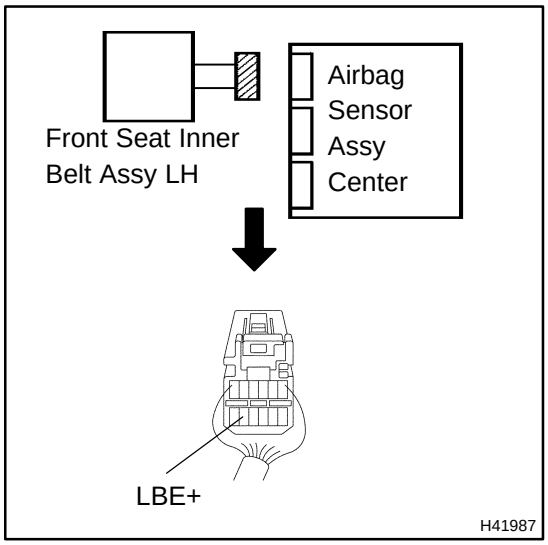

(a) Turn the ignition switch to LOCK.
(b) Disconnect the negative (–) terminal cable from the battery, and wait at least for 90 seconds.
(c) Connect the connector of the front seat inner belt assy (LH).
(d) Unlock the seat belt for the front driver's seat.
(e) For the connector (on the airbag sensor assy center side), measure the resistance between LBE+ and body ground.
OK:
Resistance: 1.0 kΩ – 1.6 kΩ

NG → **REPLACE FRONT SEAT INNER BELT ASSY LH**

OK

4	CHECK FRONT SEAT INNER BELT ASSY LH

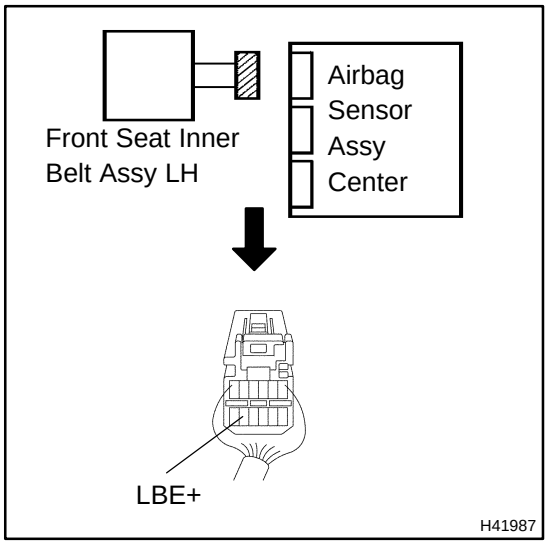

(a) Lock the seat belt for the front driver's seat.
(b) For the connector (on the airbag sensor assy center side), measure the resistance between LBE+ and body ground.
OK:
Resistance: 100 Ω – 500 Ω

NG → **REPLACE FRONT SEAT INNER BELT ASSY LH**

OK

5	CHECK AIR BAG SENSOR ASSY CENTER

SST 09843–18040

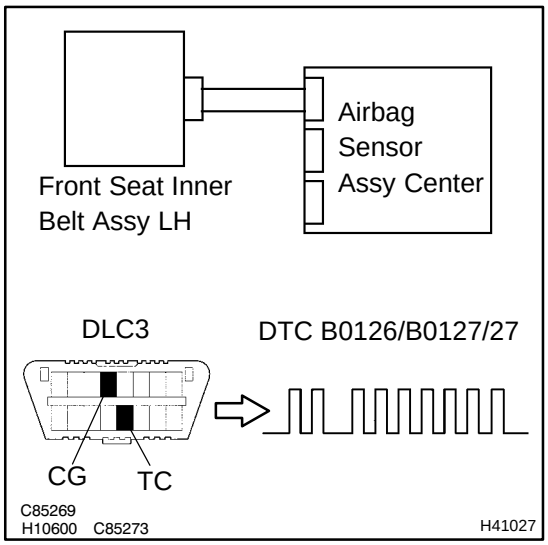

(a) Connect the connector to the airbag sensor assy center.
(b) Connect the negative (–) terminal cable to the battery, and wait at least for 2 seconds.
(c) Turn the ignition switch to ON, and wait at least for 20 seconds.
(d) Clear the DTC stored in memory (See page 05–424).
(e) Turn the ignition switch to LOCK, and wait at least for 20 seconds.
(f) Turn the ignition switch to ON, and wait at least for 20 seconds.
(g) Check the DTC (See page 05–424).
OK:
DTC B0126/B0127/27 is not output.

HINT:
Codes other than code B0126/B0127/27 may be output at this time, but they are not relevant to this check.

NG → **REPLACE AIR BAG SENSOR ASSY CENTER**

OK

USE SIMULATION METHOD TO CHECK

DTC B0130/63 SHORT IN P/T SQUIB (RH) CIRCUIT

CIRCUIT DESCRIPTION

The P/T squib (RH) circuit consists of the airbag sensor assy center and seat belt pretensioner (RH).
It causes the SRS to deploy when the SRS deployment conditions are satisfied.
DTC B0130/63 is recorded when a short is detected in the P/T squib (RH) circuit.

DTC No.	DTC Detecting Condition	Trouble Area
B0130/63	• Short circuit between PR+ wire harness and PR– wire harness of squib • P/T squib (RH) malfunction • Airbag sensor assy center malfunction	• Seat belt pretensioner (RH) • Airbag sensor assy center • Instrument panel wire No.3

WIRING DIAGRAM

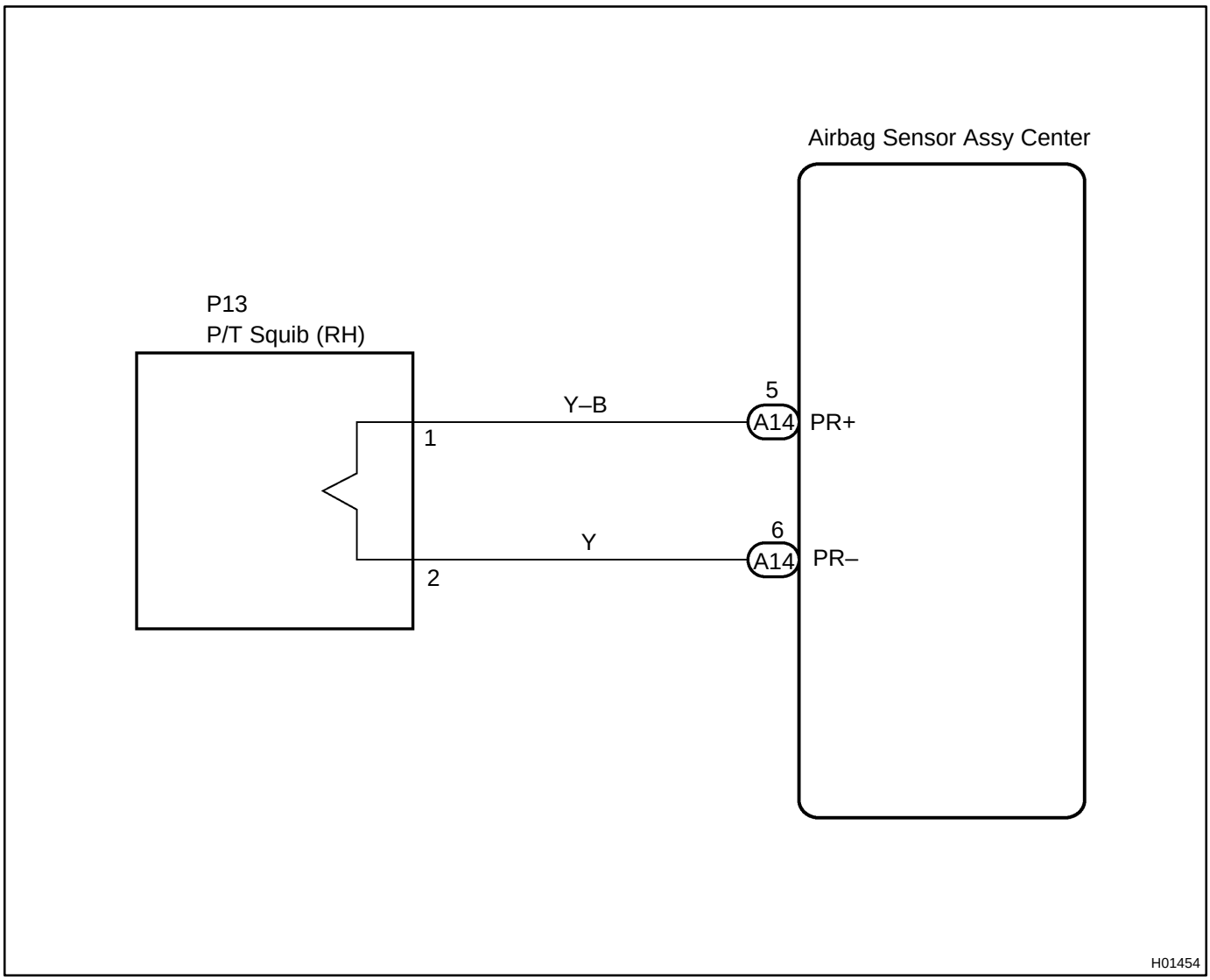

INSPECTION PROCEDURE

1	CHECK P/T SQUIB(RH) CIRCUIT(AIRBAGA SENSOR ASSY CENTER – FRONT SEAT OUTER BELT ASSY RH)

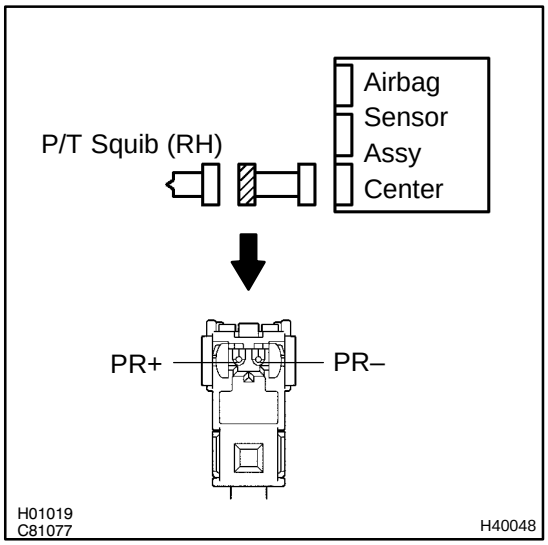

(a) Disconnect the negative (–) terminal cable from the battery, and wait at least for 90 seconds.

(b) Disconnect the connectors between the airbag sensor assy center and the seat belt pretensioner (RH).

HINT:

Make sure that the connector is not damaged (The lock button is not disengaged, or the claw of the lock is not deformed or damaged). If the damage is found, replace the wire harness.

(c) Release the airbag activation prevention mechanism of the connector (on the airbag sensor assy center side) between the airbag sensor assy center and the seat belt pretensioner (RH) (See page 05–424).

(d) For the connector (on the seat belt pretensioner side) between the airbag sensor assy center and the seat belt pretensioner (RH), measure the resistance between PR+ and PR–.

OK:

Resistance: 1 MΩ or Higher

NG → **REPAIR OR REPLACE INSTRUMENT PANEL WIRE NO.3(AIRBAG SENSOR ASSY CENTER – FRONT SEAT OUTER BELT ASSY RH)**

OK

2	CHECK AIR BAG SENSOR ASSY CENTER

SST 09843–18040

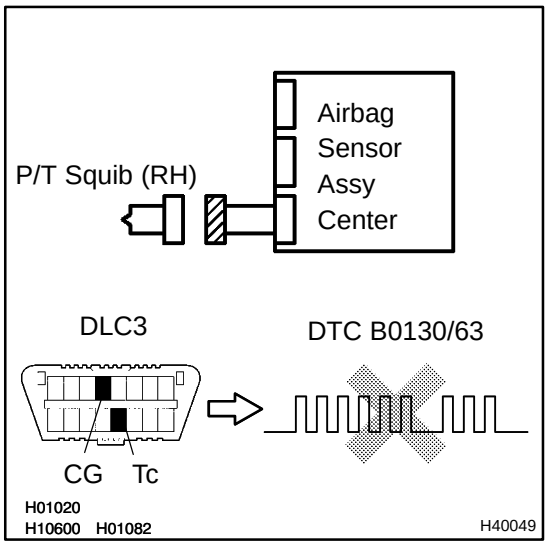

(a) Connect the connector to the airbag sensor assy center.
(b) Connect the negative (–) terminal cable to the battery, and wait at least for 2 seconds.
(c) Turn the ignition switch to ON, and wait at least for 20 seconds.
(d) Clear the DTC stored in memory (See page 05–424).
(e) Turn the ignition switch to LOCK, and wait at least for 20 seconds.
(f) Turn the ignition switch to ON, and wait at least for 20 seconds.
(g) Check the DTC (See page 05–424).
OK:
DTC B0130/63 is not output.

HINT:
Codes other than code B0130/63 may be output at this time, but they are not relevant to this check.

NG → **REPLACE AIR BAG SENSOR ASSY CENTER**

OK

3	CHECK P/T SQUIB (RH)

SST 09843–18040

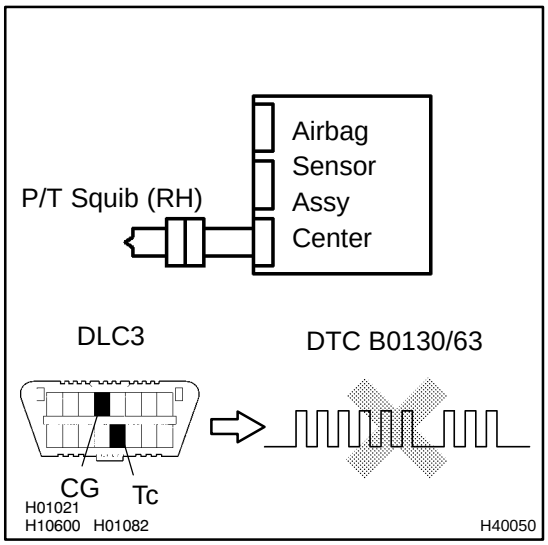

(a) Turn the ignition switch to LOCK.
(b) Disconnect the negative (–) terminal cable from the battery, and wait at least for 90 seconds.
(c) Connect the seat belt pretensioner (RH) connector.
(d) Connect the negative (–) terminal cable to the battery, and wait at least for 2 seconds.
(e) Turn the ignition switch to ON, and wait at least for 20 seconds.
(f) Clear the DTC stored in memory (See page 05–424).
(g) Turn the ignition switch to LOCK, and wait at least for 20 seconds.
(h) Turn the ignition switch to ON, and wait at least for 20 seconds.
(i) Check the DTC (See page 05–424).

OK:

DTC B0130/63 is not output.

HINT:

Codes other than code B0130/63 may be output at this time, but they are not relevant to this check.

NG → **REPLACE FRONT SEAT OUTER BELT ASSY RH**

OK

USE SIMULATION METHOD TO CHECK

DTC B0131/64 OPEN IN P/T (RH) CIRCUIT

CIRCUIT DESCRIPTION

The P/T squib circuit (RH) consists of the airbag sensor assy center and seat belt pretensioner (RH).
It causes the SRS to deploy when the SRS deployment conditions are satisfied.
DTC B0131/64 is recorded when an open is detected in the P/T squib (RH) circuit.

DTC No.	DTC Detecting Condition	Trouble Area
B0131/64	• Open circuit in PR+ wire harness or PR– wire harness of squib • P/T squib (RH) malfunction • Airbag sensor assy center malfunction	• Seat belt pretensioner (RH) • Airbag sensor assy center • Instrument panel wire No.3

WIRING DIAGRAM

See page 05–494.

INSPECTION PROCEDURE

1	CHECK P/T SQUIB(RH) CIRCUIT(AIRBAG SENSOR ASSY CENTER – FRONT SEAT OUTER BELT ASSY RH)

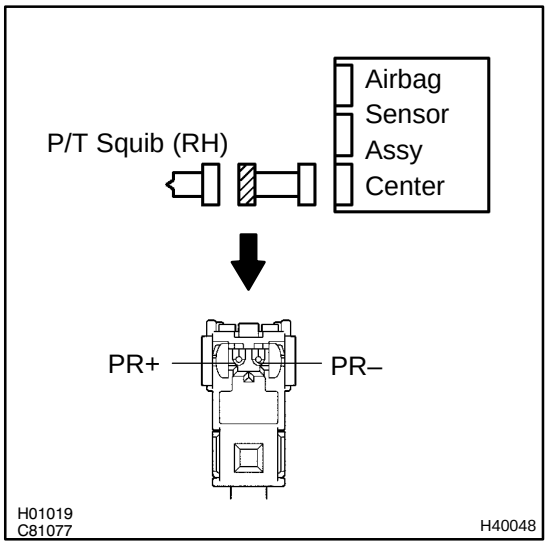

(a) Disconnect the negative (–) terminal cable from the battery, and wait at least for 90 seconds.
(b) Disconnect the connectors between the airbag sensor assy center and the seat belt pretensioner (RH).
(c) For the connector (on the seat belt pretensioner side) between the airbag sensor assy center and the seat belt pretensioner (RH), measure the resistance between PR+ and PR–.
OK:
Resistance: Below 1 Ω

NG → **REPAIR OR REPLACE INSTRUMENT PANEL WIRE NO.3(AIRBAG SENSOR ASSY CENTER – FRONT SEAT OUTER BELT ASSY RH)**

OK

2 CHECK AIR BAG SENSOR ASSY CENTER

SST 09843–18040

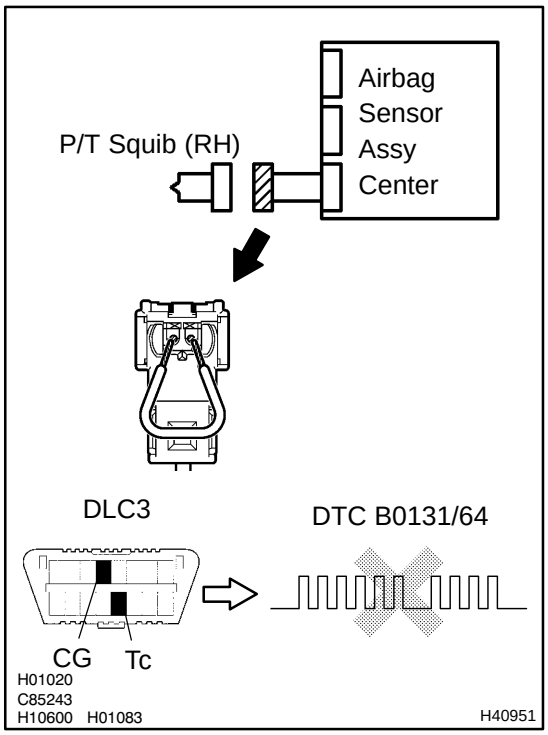

(a) Connect the connector to the airbag sensor assy center.
(b) Using a service wire, connect PR+ and PR– of the connector (on the seat belt pretensioner side) between the airbag sensor assy center and the seat belt pretensioner (RH).
(c) Connect the negative (–) terminal cable to the battery, and wait at least for 2 seconds.
(d) Turn the ignition switch to ON, and wait at least for 20 seconds.
(e) Clear the DTC stored in memory (See page 05–424).
(f) Turn the ignition switch to LOCK, and wait at least for 20 seconds.
(g) Turn the ignition switch to ON, and wait at least for 20 seconds.
(h) Check the DTC (See page 05–424).

OK:

DTC B0131/64 is not output.

HINT:

Codes other than code B0131/64 may be output at this time, but they are not relevant to this check.

NG → **REPLACE AIR BAG SENSOR ASSY CENTER**

OK

3 CHECK P/T SQUIB (RH)

SST 09843–18040

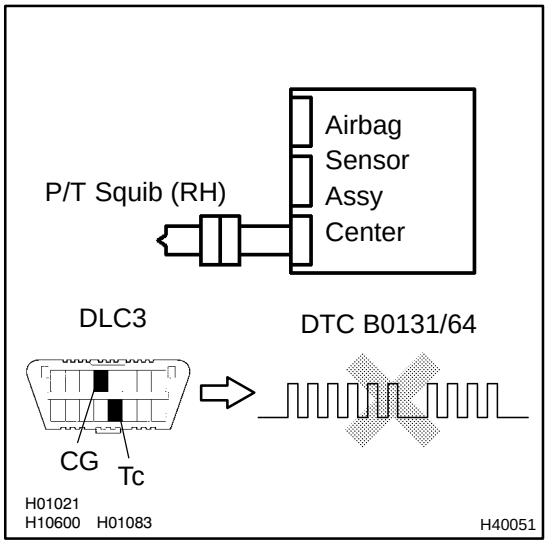

(a) Turn the ignition switch to LOCK.
(b) Disconnect the negative (–) terminal cable from the battery, and wait at least for 90 seconds.
(c) Connect the seat belt pretensioner (RH) connector.
(d) Connect the negative (–) terminal cable to the battery, and wait at least for 2 seconds.
(e) Turn the ignition switch to ON, and wait at least for 20 seconds.
(f) Clear the DTC stored in memory (See page 05–424).
(g) Turn the ignition switch to LOCK, and wait at least for 20 seconds.
(h) Turn the ignition switch to ON, and wait at least for 20 seconds.
(i) Check the DTC (See page 05–424).

OK:

DTC B0131/64 is not output.

HINT:

Codes other than code B0131/64 may be output at this time, but they are not relevant to this check.

NG → **REPLACE FRONT SEAT OUTER BELT ASSY RH**

OK

USE SIMULATION METHOD TO CHECK

DTC	B0132/61	SHORT IN P/T SQUIB (RH) CIRCUIT (TO GROUND)

CIRCUIT DESCRIPTION

The P/T squib (RH) circuit consists of the airbag sensor assy center and seat belt pretensioner (RH).
It causes the SRS to deploy when the SRS deployment conditions are satisfied.
DTC B0132/61 is recorded when a ground short is detected in the P/T squib (RH) circuit.

DTC No.	DTC Detecting Condition	Trouble Area
B0132/61	• Short circuit in P/T squib (RH) wire harness (to ground) • P/T squib (RH) malfunction • Airbag sensor assy center malfunction	• Seat belt pretensioner (RH) • Airbag sensor assy center • Instrument panel wire No.3

WIRING DIAGRAM

See page 05–494.

INSPECTION PROCEDURE

1	CHECK P/T SQUIB(RH) CIRCUIT(AIRBAG SENSOR ASSY CENTER – FRONT SEAT OUTER BELT ASSY RH)

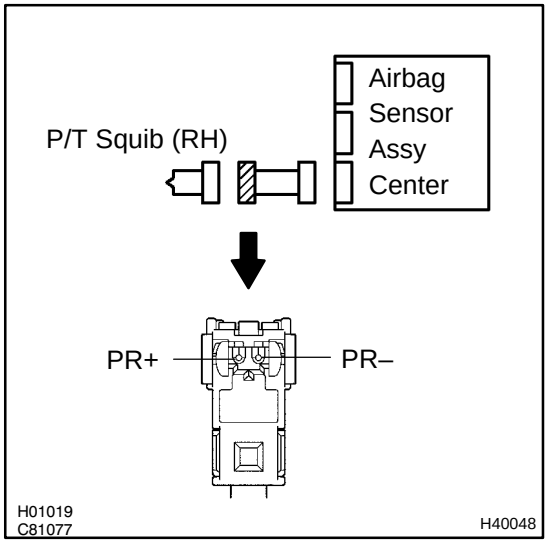

(a) Disconnect the negative (–) terminal cable from the battery, and wait at least for 90 seconds.
(b) Disconnect the connectors between the airbag sensor assy center and the seat belt pretensioner (RH).
(c) For the connector (on the seat belt pretensioner side) between the airbag sensor assy center and the seat belt pretensioner (RH), measure the resistance between PR+ and body ground.
OK:
Resistance: 1 MΩ or Higher

NG → **REPAIR OR REPLACE INSTRUMENT PANEL WIRE NO.3(AIRBAG SENSOR ASSY CENTER – FRONT SEAT OUTER BELT ASSY RH)**

OK

2 CHECK AIR BAG SENSOR ASSY CENTER

SST 09843–18040

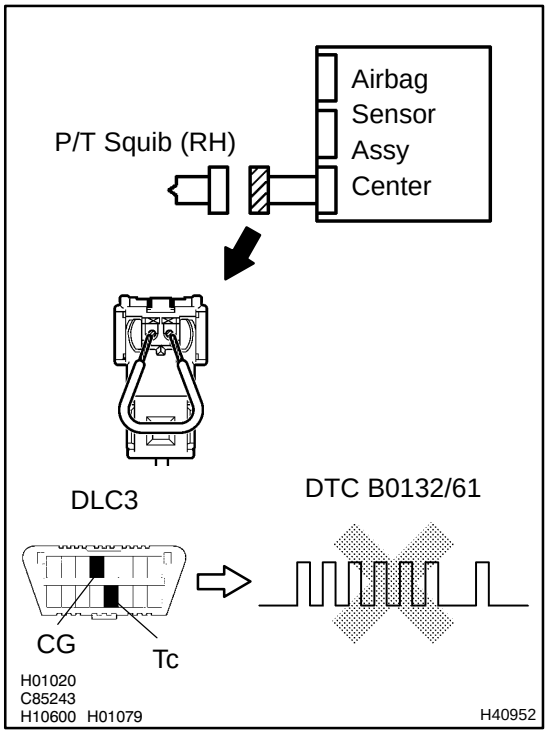

(a) Connect the connector to the airbag sensor assy center.
(b) Using a service wire, connect PR+ and PR– of the connector (on the seat belt pretensioner side) between the airbag sensor assy center and the seat belt pretensioner (RH).
(c) Connect the negative (–) terminal cable to the battery, and wait at least for 2 seconds.
(d) Turn the ignition switch to ON, and wait at least for 20 seconds.
(e) Clear the DTC stored in memory (See page 05–424).
(f) Turn the ignition switch to LOCK, and wait at least for 20 seconds.
(g) Turn the ignition switch to ON, and wait at least for 20 seconds.
(h) Check the DTC (See page 05–424).

OK:

DTC B0132/61 is not output.

HINT:

Codes other than code B0132/61 may be output at this time, but they are not relevant to this check.

NG → **REPLACE AIR BAG SENSOR ASSY CENTER**

OK

3	CHECK P/T SQUIB (RH)

SST 09843–18040

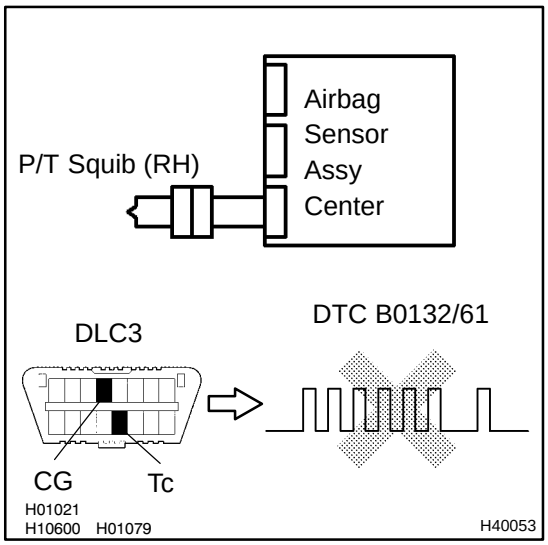

(a) Turn the ignition switch to LOCK.
(b) Disconnect the negative (–) terminal cable from the battery, and wait at least for 90 seconds.
(c) Connect the seat belt pretensioner (RH) connector.
(d) Connect the negative (–) terminal cable to the battery, and wait at least for 2 seconds.
(e) Turn the ignition switch to ON, and wait at least for 20 seconds.
(f) Clear the DTC stored in memory (See page 05–424).
(g) Turn the ignition switch to LOCK, and wait at least for 20 seconds.
(h) Turn the ignition switch to ON, and wait at least for 20 seconds.
(i) Check the DTC (See page 05–424).

OK:

DTC B0132/61 is not output.

HINT:

Codes other than code B0132/61 may be output at this time, but they are not relevant to this check.

NG → **REPLACE FRONT SEAT OUTER BELT ASSY RH**

OK

4	USE SIMULATION METHOD TO CHECK

NG → **Go to step 1**

OK

REPLACE ALL SRS COMPONENTS INCLUDING THE WIRE HARNESS

DTC B0133/62 SHORT IN P/T SQUIB (RH) CIRCUIT (TO B+)

CIRCUIT DESCRIPTION

The P/T squib (RH) circuit consists of the airbag sensor assy center and seat belt pretensioner (RH).
It causes the SRS to deploy when the SRS deployment conditions are satisfied.
DTC B0133/62 is recorded when a B+ short is detected in the P/T squib (RH) circuit.

DTC No.	DTC Detecting Condition	Trouble Area
B0133/62	• Short circuit in seat belt pretensioner (RH) wire harness (to B+) • P/T squib (RH) malfunction • Airbag sensor assy center malfunction	• Seat belt pretensioner (RH) • Airbag sensor assy center • Instrument panel wire No.3

WIRING DIAGRAM

See page 05–494.

INSPECTION PROCEDURE

1	CHECK P/T SQUIB(RH) CIRCUIT(AIRBAG SENSOR ASSY CENTER – FRONT SEAT OUTER BELT ASSY RH)

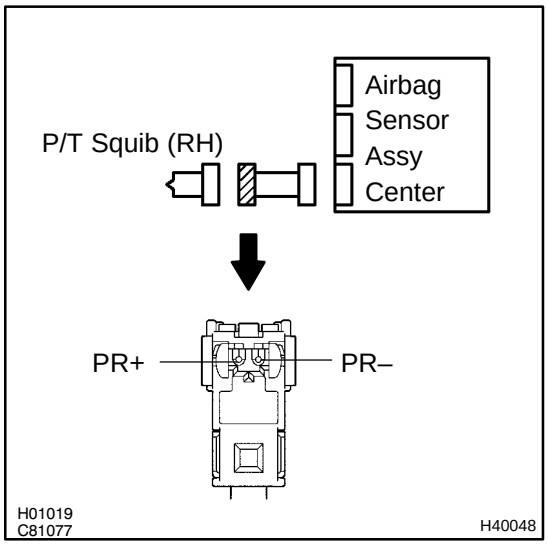

(a) Disconnect the negative (–) terminal cable from the battery, and wait at least for 90 seconds.
(b) Disconnect the connectors between the airbag sensor assy center and the seat belt pretensioner (RH).
(c) Connect the negative (–) terminal cable to the battery, and wait at least for 2 seconds.
(d) Turn the ignition switch to ON.
(e) For the connector (on the seat belt pretensioner side) between the airbag sensor assy center and the seat belt pretensioner (RH), measure the voltage between PR+ and body ground.
OK:
Voltage: Below 1V

NG → **REPAIR OR REPLACE INSTRUMENT PANEL WIRE NO.3(AIRBAG SENSOR ASSY CENTER – FRONT SEAT OUTER BELT ASSY RH)**

OK

2 CHECK AIR BAG SENSOR ASSY CENTER

SST 09843–18040

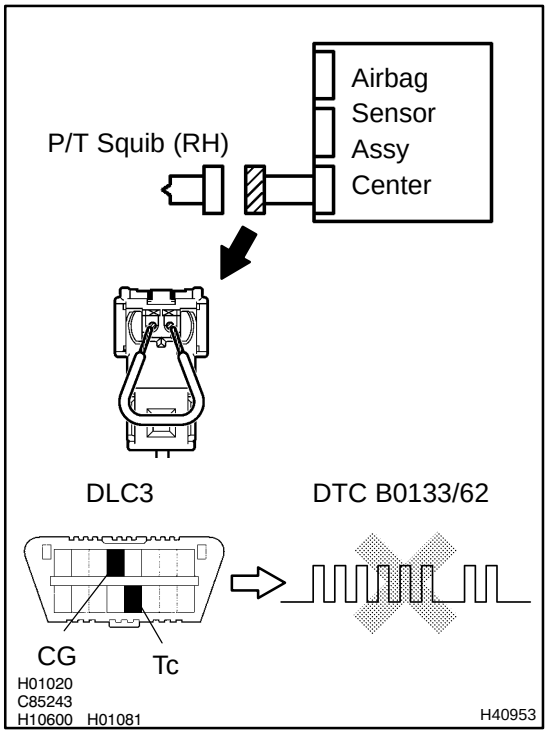

(a) Turn the ignition switch to LOCK.
(b) Disconnect the negative (–) terminal cable from the battery, and wait at least for 90 seconds.
(c) Connect the connector to the airbag sensor assy center.
(d) Using a service wire, connect PR+ and PR– of the connector (on the seat belt pretensioner side) between the airbag sensor assy center and the seat belt pretensioner (RH).
(e) Connect the negative (–) terminal cable to the battery, and wait at least for 2 seconds.
(f) Turn the ignition switch to ON, and wait at least for 20 seconds.
(g) Clear the DTC stored in memory (See page 05–424).
(h) Turn the ignition switch to LOCK, and wait at least for 20 seconds.
(i) Turn the ignition switch to ON, and wait at least for 20 seconds.
(j) Check the DTC (See page 05–424).

OK:

DTC B0133/62 is not output.

HINT:

Codes other than code B0133/62 may be output at this time, but they are not relevant to this check.

NG → **REPLACE AIR BAG SENSOR ASSY CENTER**

OK

3	CHECK P/T SQUIB (RH)

SST 09843–18040

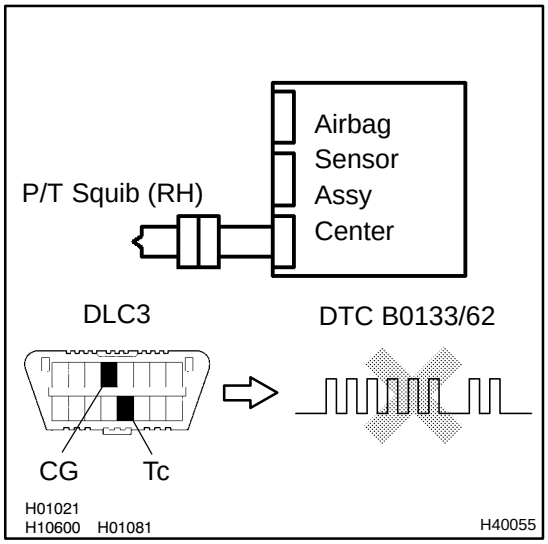

(a) Turn the ignition switch to LOCK.
(b) Disconnect the negative (–) terminal cable from the battery, and wait at least for 90 seconds.
(c) Connect the seat belt pretensioner (RH) connector.
(d) Connect the negative (–) terminal cable to the battery, and wait at least for 2 seconds.
(e) Turn the ignition switch to ON, and wait at least for 20 seconds.
(f) Clear the DTC stored in memory (See page 05–424).
(g) Turn the ignition switch to LOCK, and wait at least for 20 seconds.
(h) Turn the ignition switch to ON, and wait at least for 20 seconds.
(i) Check the DTC (See page 05–424).

OK:

DTC B0133/62 is not output.

HINT:

Codes other than code B0133/62 may be output at this time, but they are not relevant to this check.

NG → **REPLACE FRONT SEAT OUTER BELT ASSY RH**

OK

4	USE SIMULATION METHOD TO CHECK

NG → **Go to step 1**

OK

REPLACE ALL SRS COMPONENTS INCLUDING THE WIRE HARNESS

DTC B0135/73 SHORT IN P/T SQUIB (LH) CIRCUIT

CIRCUIT DESCRIPTION

The P/T squib (LH) circuit consists of the airbag sensor assy center and seat belt pretensioner (LH).
It causes the SRS to deploy when the SRS deployment conditions are satisfied.
DTC B0135/73 is recorded when a short is detected in the P/T squib (LH) circuit.

DTC No.	DTC Detecting Condition	Trouble Area
B0135/73	• Short circuit between PL+ wire harness and PL– wire harness of squib • P/T squib (LH) malfunction • Airbag sensor assy center malfunction	• Seat belt pretensioner (LH) • Airbag sensor assy center • Instrument panel wire No.3

WIRING DIAGRAM

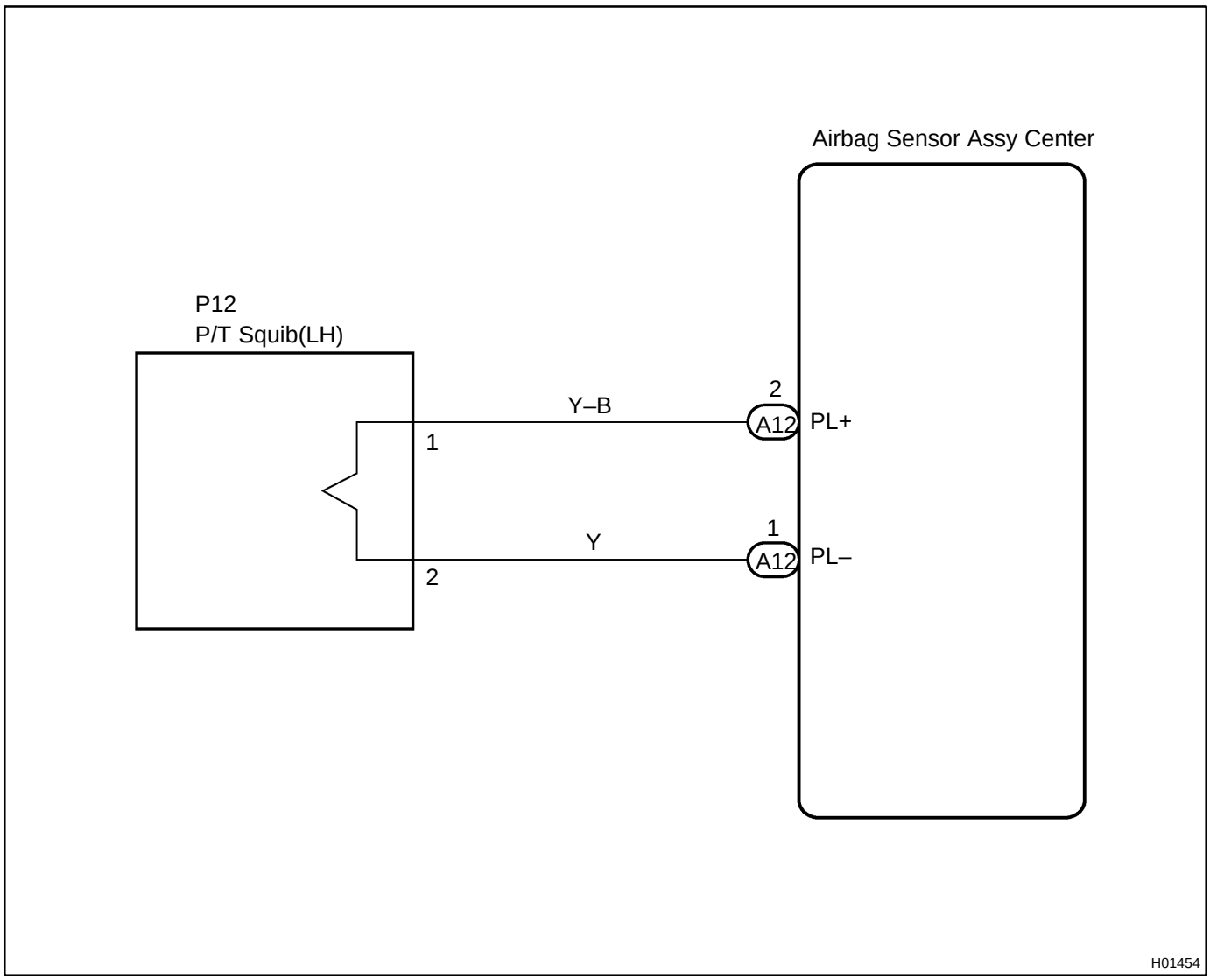

INSPECTION PROCEDURE

1	CHECK P/T SQUIB(LH) CIRCUIT(AIRBAG SENSOR ASSY CENTER – FRONT SEAT OUTER BELT ASSY LH)

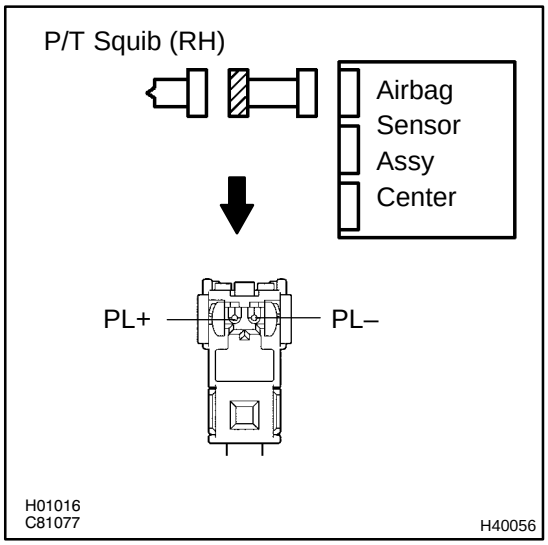

(a) Disconnect the negative (–) terminal cable from the battery, and wait at least for 90 seconds.

(b) Disconnect the connectors between the airbag sensor assy center and the seat belt pretensioner (LH).

HINT:

Make sure that the connector is not damaged (The lock button is not disengaged, or the claw of the lock is not deformed or damaged). If the damage is found, replace the wire harness.

(c) Release the airbag activation prevention mechanism of the connector (on the airbag sensor assy center side) between the airbag sensor assy center and the seat belt pretensioner (LH) (See page 05–424).

(d) For the connector (on the seat belt pretensioner side) between the airbag sensor assy center and the seat belt pretensioner (LH), measure the resistance between PL+ and PL–.

OK:

Resistance: 1 MΩ or Higher

NG → **REPAIR OR REPLACE INSTRUMENT PANEL WIRE NO.3(AIRBAG SENSOR ASSY CENTER – FRONT SEAT OUTER BELT ASSY LH)**

OK

2	CHECK AIR BAG SENSOR ASSY CENTER

SST 09843–18040

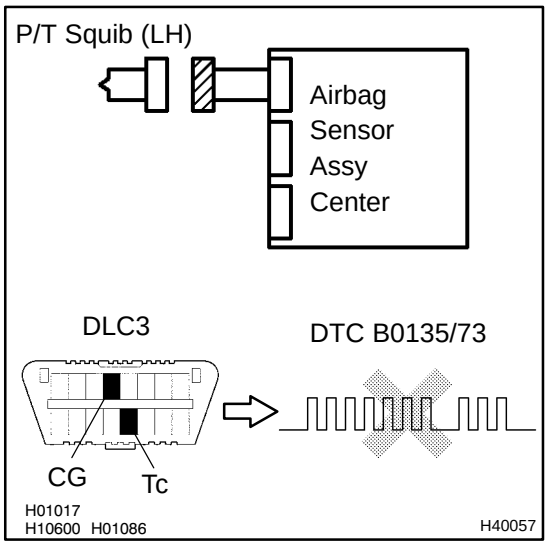

(a) Connect the connector to the airbag sensor assy center.
(b) Connect the negative (–) terminal cable to the battery, and wait at least for 2 seconds.
(c) Turn the ignition switch to ON, and wait at least for 20 seconds.
(d) Clear the DTC stored in memory (See page 05–424).
(e) Turn the ignition switch to LOCK, and wait at least for 20 seconds.
(f) Turn the ignition switch to ON, and wait at least for 20 seconds.
(g) Check the DTC (See page 05–424).
OK:
DTC B0135/73 is not output.

HINT:
Codes other than code B0135/73 may be output at this time, but they are not relevant to this check.

NG → **REPLACE AIR BAG SENSOR ASSY CENTER**

OK

3	CHECK P/T SQUIB (LH)

SST 09843–18040

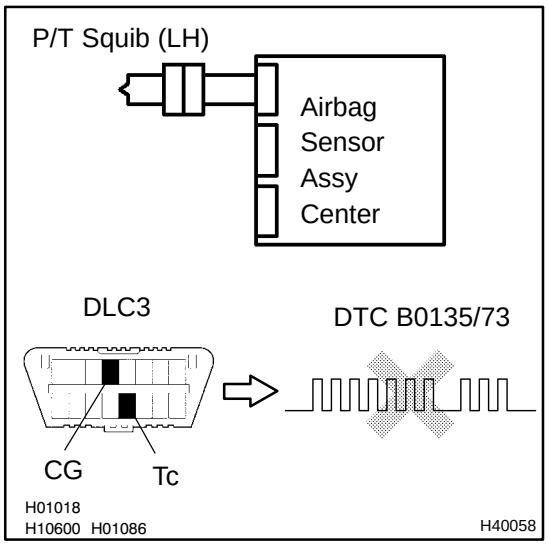

(a) Turn the ignition switch to LOCK.
(b) Disconnect the negative (–) terminal cable from the battery, and wait at least for 90 seconds.
(c) Connect the seat belt pretensioner (LH) connector.
(d) Connect the negative (–) terminal cable to the battery, and wait at least for 2 seconds.
(e) Turn the ignition switch to ON, and wait at least for 20 seconds.
(f) Clear the DTC stored in memory (See page 05–424).
(g) Turn the ignition switch to LOCK, and wait at least for 20 seconds.
(h) Turn the ignition switch to ON, and wait at least for 20 seconds.
(i) Check the DTC (See page 05–424).

OK:

DTC B0135/73 is not output.

HINT:

Codes other than code B0135/73 may be output at this time, but they are not relevant to this check.

NG → **REPLACE FRONT SEAT OUTER BELT ASSY LH**

OK

USE SIMULATION METHOD TO CHECK

DTC B0136/74 OPEN IN P/T SQUIB (LH) CIRCUIT

CIRCUIT DESCRIPTION

The P/T squib circuit (LH) consists of the airbag sensor assy center and seat belt pretensioner (LH).
It causes the SRS to deploy when the SRS deployment conditions are satisfied.
DTC B0136/74 is recorded when an open is detected in the P/T squib (LH) circuit.

DTC No.	DTC Detecting Condition	Trouble Area
B0136/74	• Open circuit in PL+ wire harness or PL– wire harness of squib • P/T squib (LH) malfunction • Airbag sensor assy center malfunction	• Seat belt pretensioner (LH) • Airbag sensor assy center • Instrument panel wire No.3

WIRING DIAGRAM

See page 05–507.

INSPECTION PROCEDURE

1	CHECK P/T SQUIB(LH) CIRCUIT(AIRBAG SENSOR ASSY CENTER – FRONT SEAT OUTER BELT ASSY LH)

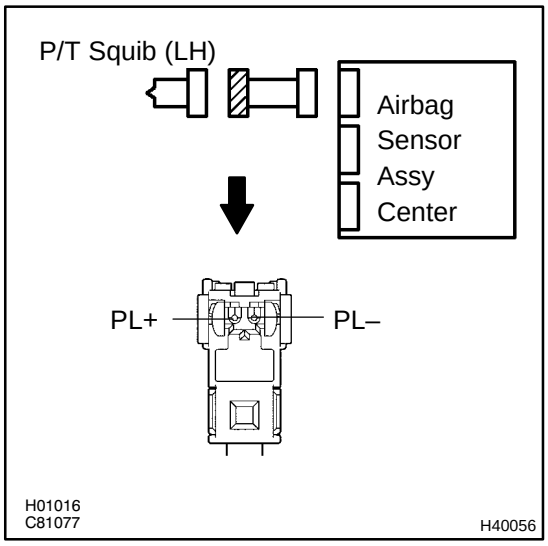

(a) Disconnect the negative (–) terminal cable from the battery, and wait at least for 90 seconds.
(b) Disconnect the connectors between the airbag sensor assy center and the seat belt pretensioner (LH).
(c) For the connector (on the seat belt pretensioner side) between the airbag sensor assy center and the seat belt pretensioner (LH), measure the resistance between PL+ and PL–.
OK:
Resistance: Below 1 Ω

NG → **REPAIR OR REPLACE INSTRUMENT PANEL WIRE NO.3(AIRBAG SENSOR ASSY CENTER – FRONT SEAT OUTER BELT ASSY LH)**

OK

2 CHECK AIR BAG SENSOR ASSY CENTER

SST 09843–18040

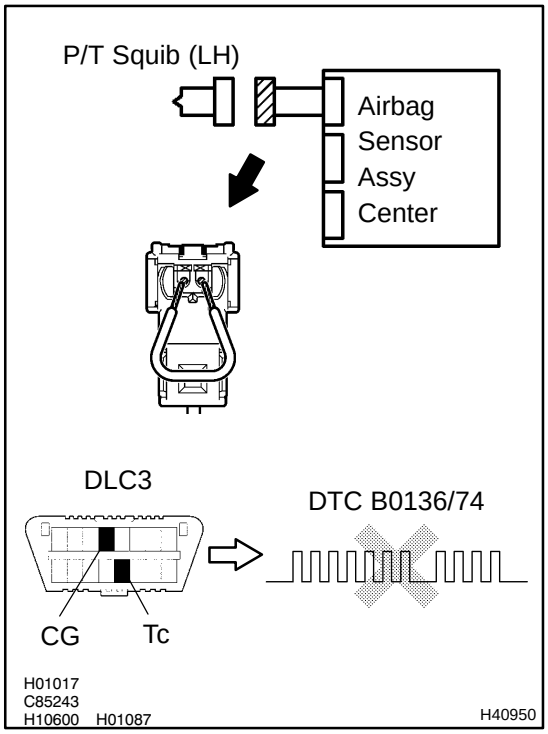

(a) Connect the connector to the airbag sensor assy center.
(b) Using a service wire, connect PL+ and PL– of the connector (on the seat belt pretensioner side) between the airbag sensor assy center and the seat belt pretensioner (LH).
(c) Connect the negative (–) terminal cable to the battery, and wait at least for 2 seconds.
(d) Turn the ignition switch to ON, and wait at least for 20 seconds.
(e) Clear the DTC stored in memory (See page 05–424).
(f) Turn the ignition switch to LOCK, and wait at least for 20 seconds.
(g) Turn the ignition switch to ON, and wait at least for 20 seconds.
(h) Check the DTC (See page 05–424).

OK:

DTC B0136/74 is not output.

HINT:

Codes other than code B0136/74 may be output at this time, but they are not relevant to this check.

NG → **REPLACE AIR BAG SENSOR ASSY CENTER**

OK

3	CHECK P/T SQUIB (LH)

SST 09843–18040

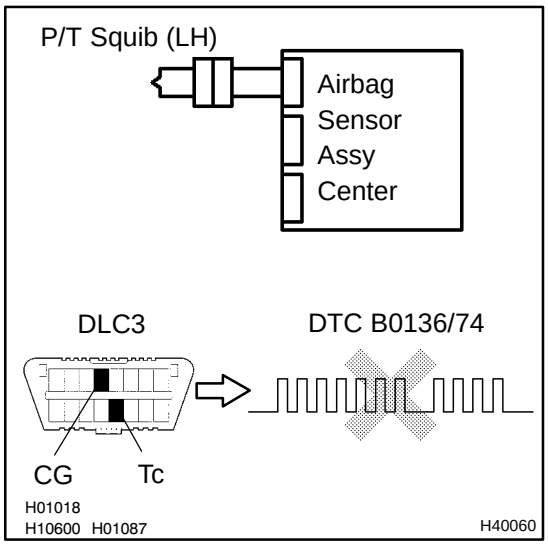

(a) Turn the ignition switch to LOCK.
(b) Disconnect the negative (–) terminal cable from the battery, and wait at least for 90 seconds.
(c) Connect the seat belt pretensioner (LH) connector.
(d) Connect the negative (–) terminal cable to the battery, and wait at least for 2 seconds.
(e) Turn the ignition switch to ON, and wait at least for 20 seconds.
(f) Clear the DTC stored in memory (See page 05–424).
(g) Turn the ignition switch to LOCK, and wait at least for 20 seconds.
(h) Turn the ignition switch to ON, and wait at least for 20 seconds.
(i) Check the DTC (See page 05–424).

OK:

DTC B0136/74 is not output.

HINT:

Codes other than code B0136/74 may be output at this time, but they are not relevant to this check.

NG → **REPLACE FRONT SEAT OUTER BELT ASSY LH**

OK

USE SIMULATION METHOD TO CHECK

DTC	B0137/71	SHORT IN P/T SQUIB (LH) CIRCUIT (TO GROUND)

CIRCUIT DESCRIPTION

The P/T squib (LH) circuit consists of the airbag sensor assy center and seat belt pretensioner (LH).
It causes the SRS to deploy when the SRS deployment conditions are satisfied.
DTC B0137/71 is recorded when a ground short is detected in the P/T squib (LH) circuit.

DTC No.	DTC Detecting Condition	Trouble Area
B0137/71	• Short circuit in P/T squib (LH) wire harness (to ground) • P/T squib (LH) malfunction • Airbag sensor assy center malfunction	• Seat belt pretensioner (LH) • Airbag sensor assy center • Instrument panel wire No.3

WIRING DIAGRAM

See page 05–507.

INSPECTION PROCEDURE

1	CHECK P/T SQUIB(LH) CIRCUIT(AIRBAG SENSOR ASSY CENTER – FRONT SEAT OUTER BELT ASSY LH)

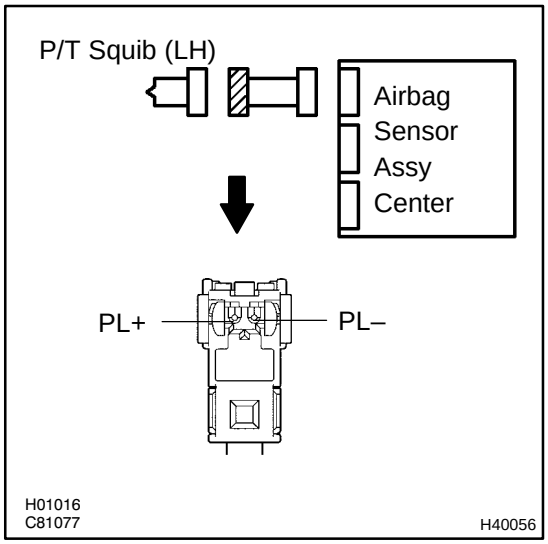

(a) Disconnect the negative (–) terminal cable from the battery, and wait at least for 90 seconds.
(b) Disconnect the connectors between the airbag sensor assy center and the seat belt pretensioner (LH).
(c) For the connector (on the seat belt pretensioner side) between the airbag sensor assy center and the seat belt pretensioner (LH), measure the resistance between PL+ and body ground.
OK:
Resistance: 1 MΩ or Higher

NG → **REPAIR OR REPLACE INSTRUMENT PANEL WIRE NO.3(AIRBAG SENSOR ASSY CENTER – FRONT SEAT OUTER BELT ASSY LH)**

OK

2 CHECK AIR BAG SENSOR ASSY CENTER

SST 09843–18040

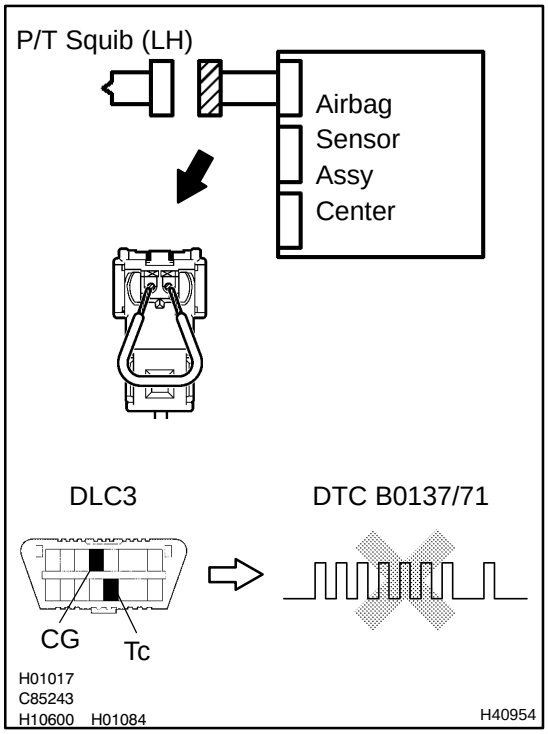

(a) Connect the connector to the airbag sensor assy center.
(b) Using a service wire, connect PL+ and PL– of the connector (on the seat belt pretensioner side) between the airbag sensor assy center and the seat belt pretensioner (LH).
(c) Connect the negative (–) terminal cable to the battery, and wait at least for 2 seconds.
(d) Turn the ignition switch to ON, and wait at least for 20 seconds.
(e) Clear the DTC stored in memory (See page 05–424).
(f) Turn the ignition switch to LOCK, and wait at least for 20 seconds.
(g) Turn the ignition switch to ON, and wait at least for 20 seconds.
(h) Check the DTC (See page 05–424).

OK:

DTC B0137/71 is not output.

HINT:

Codes other than code B0137/71 may be output at this time, but they are not relevant to this check.

NG → **REPLACE AIR BAG SENSOR ASSY CENTER**

OK

3 CHECK P/T SQUIB (LH)

SST 09843–18040

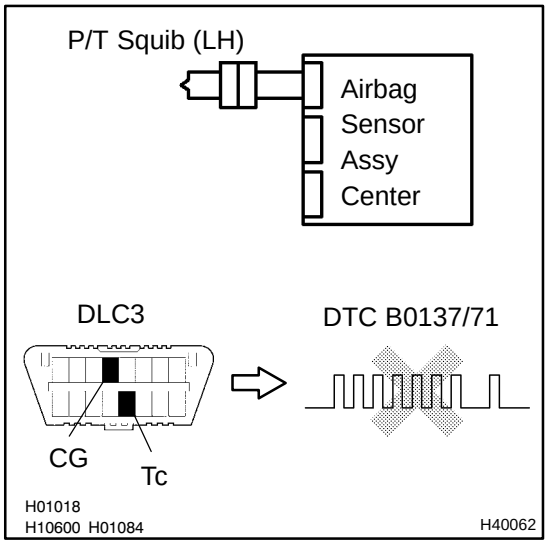

(a) Turn the ignition switch to LOCK.
(b) Disconnect the negative (–) terminal cable from the battery, and wait at least for 90 seconds.
(c) Connect the seat belt pretensioner (LH) connector.
(d) Connect the negative (–) terminal cable to the battery, and wait at least for 2 seconds.
(e) Turn the ignition switch to ON, and wait at least for 20 seconds.
(f) Clear the DTC stored in memory (See page 05–424).
(g) Turn the ignition switch to LOCK, and wait at least for 20 seconds.
(h) Turn the ignition switch to ON, and wait at least for 20 seconds.
(i) Check the DTC (See page 05–424).

OK:

DTC B0137/71 is not output.

HINT:

Codes other than code B0137/71 may be output at this time, but they are not relevant to this check.

NG → **REPLACE FRONT SEAT OUTER BELT ASSY LH**

OK

4 USE SIMULATION METHOD TO CHECK

NG → **Go to step 1**

OK

REPLACE ALL SRS COMPONENTS INCLUDING THE WIRE HARNESS

DTC B0138/72 SHORT IN P/T SQUIB (LH) CIRCUIT (TO B+)

CIRCUIT DESCRIPTION

The P/T squib (LH) circuit consists of the airbag sensor assy center and seat belt pretensioner (LH).
It causes the SRS to deploy when the SRS deployment conditions are satisfied.
DTC B0138/72 is recorded when a B+ short is detected in the P/T squib (LH) circuit.

DTC No.	DTC Detecting Condition	Trouble Area
B0138/72	• Short circuit in seat belt pretensioner (LH) wire harness (to B+) • P/T squib (LH) malfunction • Airbag sensor assy center malfunction	• Seat belt pretensioner (LH) • Airbag sensor assy center • Instrument panel wire No.3

WIRING DIAGRAM

See page 05–507.

INSPECTION PROCEDURE

1	CHECK P/T SQUIB(LH) CIRCUIT(AIRBAG SENSOR ASSY CENTER – FRONT SEAT OUTER BELT ASSY LH)

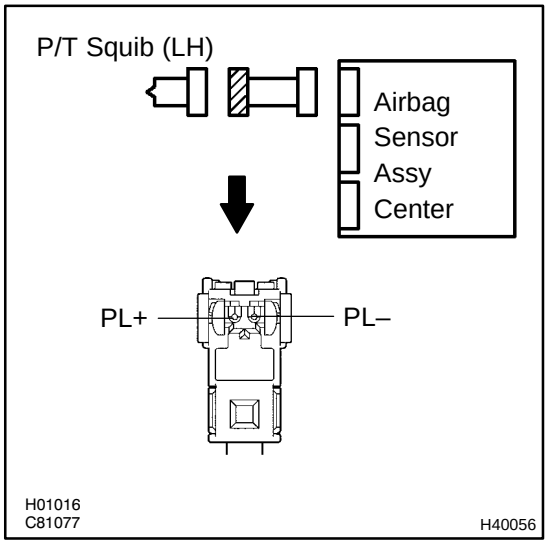

(a) Disconnect the negative (–) terminal cable from the battery, and wait at least for 90 seconds.
(b) Disconnect the connectors between the airbag sensor assy center and the seat belt pretensioner (LH).
(c) Connect the negative (–) terminal cable to the battery, and wait at least for 2 seconds.
(d) Turn the ignition switch to ON.
(e) For the connector (on the seat belt pretensioner side) between the airbag sensor assy center and the seat belt pretensioner (LH), measure the voltage between PL+ and body ground.
OK:
Voltage: Below 1V

NG → **REPAIR OR REPLACE INSTRUMENT PANEL WIRE NO.3(AIRBAG SENSOR ASSY CENTER – FRONT SEAT OUTER BELT ASSY LH)**

OK

2 CHECK AIR BAG SENSOR ASSY CENTER

SST 09843–18040

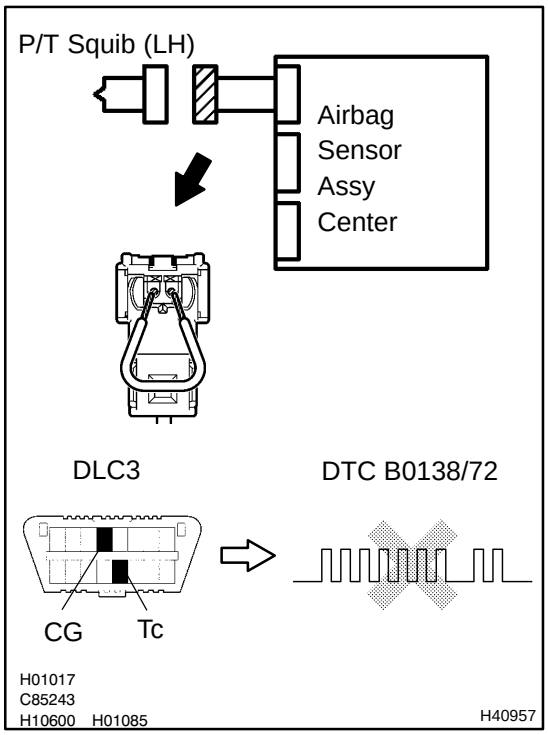

(a) Turn the ignition switch to LOCK.
(b) Disconnect the negative (–) terminal cable from the battery and wait at least for 90 seconds.
(c) Connect the connector to the airbag sensor assy center.
(d) Using a service wire, connect PL+ and PL– of the connector (on the seat belt pretensioner side) between the airbag sensor assy center and the seat belt pretensioner (LH).
(e) Connect the negative (–) terminal cable to the battery, and wait at least for 2 seconds.
(f) Turn the ignition switch to ON, and wait at least for 20 seconds.
(g) Clear the DTC stored in memory (See page 05–424).
(h) Turn the ignition switch to LOCK, and wait at least for 20 seconds.
(i) Turn the ignition switch to ON, and wait at least for 20 seconds.
(j) Check the DTC (See page 05–424).

OK:

DTC B0138/72 is not output.

HINT:

Codes other than code B0138/72 may be output at this time, but they are not relevant to this check.

NG → **REPLACE AIR BAG SENSOR ASSY CENTER**

OK

3	CHECK P/T SQUIB (LH)

SST 09843–18040

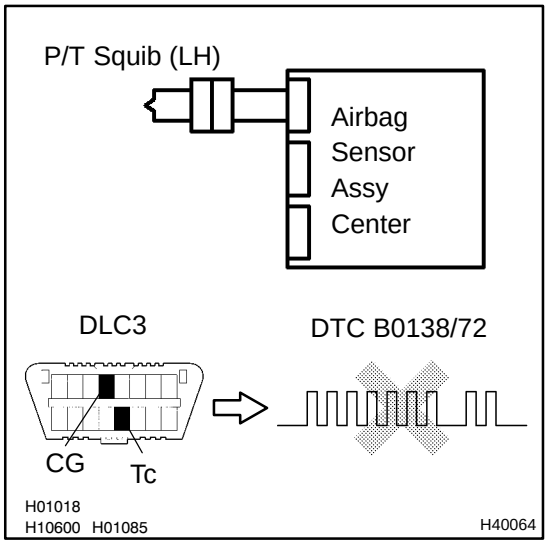

(a) Turn the ignition switch to LOCK.
(b) Disconnect the negative (–) terminal cable from the battery, and wait at least for 90 seconds.
(c) Connect the seat belt pretensioner (LH) connector.
(d) Connect the negative (–) terminal cable to the battery, and wait at least for 2 seconds.
(e) Turn the ignition switch to ON, and wait at least for 20 seconds.
(f) Clear the DTC stored in memory (See page 05–424).
(g) Turn the ignition switch to LOCK, and wait at least for 20 seconds.
(h) Turn the ignition switch to ON, and wait at least for 20 seconds.
(i) Check the DTC (See page 05–424).

OK:

DTC B0138/72 is not output.

HINT:

Codes other than code B0138/72 may be output at this time, but they are not relevant to this check.

NG → **REPLACE FRONT SEAT OUTER BELT ASSY LH**

OK

4	USE SIMULATION METHOD TO CHECK

NG → **Go to step 1**

OK

REPLACE ALL SRS COMPONENTS INCLUDING THE WIRE HARNESS

DTC	B0112/41	SHORT IN SIDE SQUIB (RH) CIRCUIT (TO GROUND)

CIRCUIT DESCRIPTION

The side squib (RH) circuit consists of the airbag sensor assy center and front seat airbag assy (RH).
It causes the SRS to deploy when the SRS deployment conditions are satisfied.
DTC B0112/41 is recorded when ground short is detected in the side squib (RH) circuit.

DTC No.	DTC Detecting Condition	Trouble Area
B0112/41	• Short circuit in side squib (RH) wire harness (to ground) • Side squib (RH) malfunction • Airbag sensor assy center malfunction	• Front seat airbag assy (RH) • Airbag sensor assy center • Instrument panel wire No.3

WIRING DIAGRAM

See page 05–466.

INSPECTION PROCEDURE

1	CHECK SIDE SQUIB(RH) CIRCUIT(AIRBAG SENSOR ASSY CENTER – FRONT SEAT AIRBAG ASSY RH)

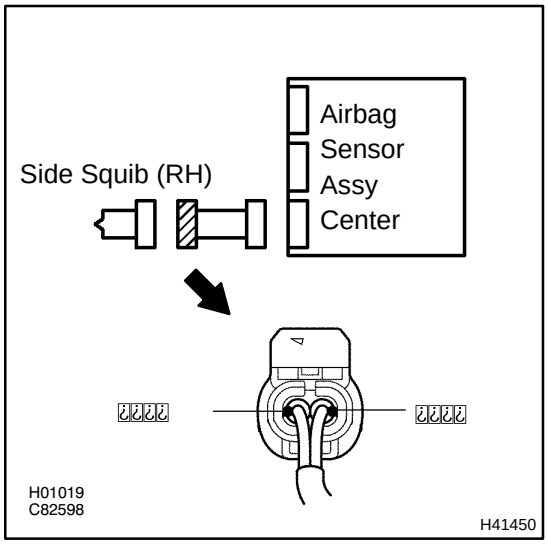

(a) Disconnect the negative (–) terminal cable from the battery, and wait at least for 90 seconds.
(b) Disconnect the connectors between the airbag sensor assy center and the front seat airbag assy (RH).
(c) For the connector (on the front seat airbag assy side) between the airbag sensor assy center and the front seat airbag assy (RH), measure the resistance between SFR+ and body ground.
OK:
Resistance: 1 MΩ or Higher

NG → **REPAIR OR REPLACE INSTRUMENT PANEL WIRE NO.3(AIRBAG SENSOR ASSY CENTER – FRONT SEAT AIRBAG ASSY RH)**

OK

2 CHECK AIR BAG SENSOR ASSY CENTER

SST 09843–18040

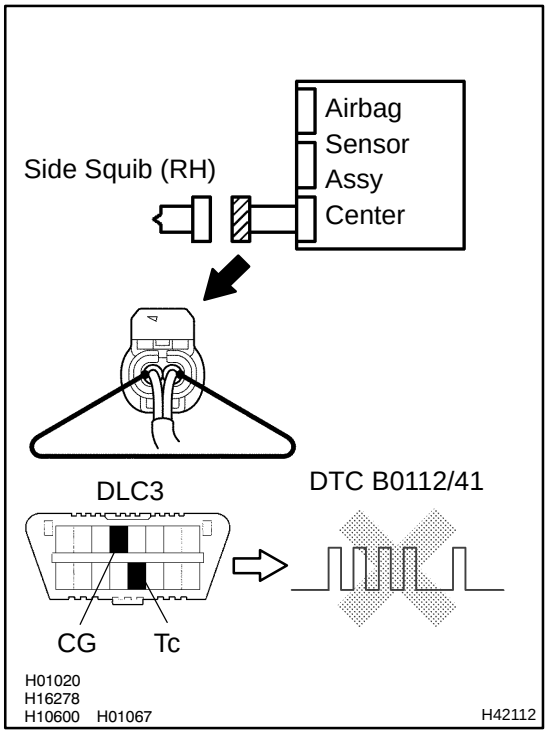

(a) Connect the connector to the airbag sensor assy center.
(b) Using a service wire, connect SFR+ and SFR– of the connector (on the front seat airbag assy side) between the airbag sensor assy center and the front seat airbag assy (RH).
(c) Connect the negative (–) terminal cable to the battery, and wait at least for 2 seconds.
(d) Turn the ignition switch to ON, and wait at least for 20 seconds.
(e) Clear the DTC stored in memory (See page 05–424).
(f) Turn the ignition switch to LOCK, and wait at least for 20 seconds.
(g) Turn the ignition switch to ON, and wait at least for 20 seconds.
(h) Check the DTC (See page 05–424).

OK:

DTC B0112/41 is not output.

HINT:

Codes other than code B0112/41 may be output at this time, but they are not relevant to this check.

NG → **REPLACE AIR BAG SENSOR ASSY CENTER**

OK

3	CHECK SIDE SQUIB(RH)

SST 09843–18040

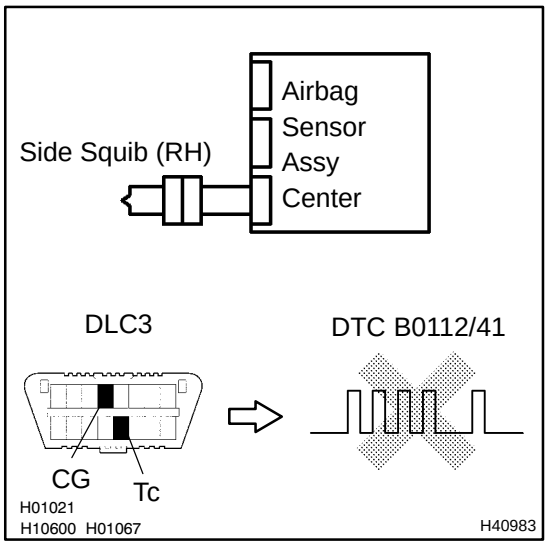

(a) Turn the ignition switch to LOCK.
(b) Disconnect the negative (–) terminal cable from the battery, and wait at least for 90 seconds.
(c) Connect the front seat airbag assy (RH) connector.
(d) Connect the negative (–) terminal cable to the battery, and wait at least for 2 seconds.
(e) Turn the ignition switch to ON, and wait at least for 20 seconds.
(f) Clear the DTC stored in memory (See page 05–424).
(g) Turn the ignition switch to LOCK, and wait at least for 20 seconds.
(h) Turn the ignition switch to ON, and wait at least for 20 seconds.
(i) Check the DTC (See page 05–424).

OK:

DTC B0112/41 is not output.

HINT:

Codes other than code B0112/41 may be output at this time, but they are not relevant to this check.

NG → **REPLACE SEPARATE TYPE FRONT SEAT BACK ASSY**

OK

4	USE SIMULATION METHOD TO CHECK

NG → **Go to step 1**

OK

REPLACE ALL SRS COMPONENTS INCLUDING THE WIRE HARNESS

05257–12

CUSTOMER PROBLEM ANALYSIS CHECK

Supplemental Restraint System Check Sheet

Inspector's Name _____

Customer's Name		**Registration No.**	
		Registration Year	
		Frame No.	
Date Vehicle Brought In		**Odometer Reading**	**km Miles**

Date Problem Occurred	
Weather	☐ **Fine** ☐ **Cloudy** ☐ **Rainy** ☐ **Snowy** ☐ **Other**
Temperature	**Approx.**

Vehicle Operation	☐ **Starting** ☐ **Idling** ☐ **Driving [** ☐ **Constant speed** ☐ **Acceleration** ☐ **Deceleration** ☐ **Other]**
Road Condition	
Details Of Problem	

Vehicle Inspection, Repair History Prior to Occurrence of Malfunction (Including Supplemental Restraint System)	

Diagnosis System Inspection

SRS Warning Light Inspection	**1st Time**	☐ **Remains ON** ☐ **Sometimes Lights Up** ☐ **Does Not Light Up**
	2nd Time	☐ **Remains ON** ☐ **Sometimes Lights Up** ☐ **Does Not Light Up**
DTC Inspection	**1st Time**	☐ **Normal Code** ☐ **Malfunction Code [Code.]**
	2nd Time	☐ **Normal Code** ☐ **Malfunction Code [Code.]**

H40122

05259–14

DIAGNOSTIC TROUBLE CODE CHART

DTC No. (See page)	Detection Item	Trouble Area	SRS Warning Light
B0100/13 (05–437)	• SHORT IN D SQUIB CIRCUIT	• Horn button assy (squib) • Spiral cable sub–assy • Airbag sensor assy center • Instrument panel wire	ON
B0101/14 (05–441)	• OPEN IN D SQUIB CIRCUIT	• Horn button assy (squib) • Spiral cable sub–assy • Airbag sensor assy center • Instrument panel wire	ON
B0102/11 (05–445)	• SHORT IN D SQUIB CIRCUIT (TO GROUND)	• Horn button assy (squib) • Spiral cable sub–assy • Airbag sensor assy center • Instrument panel wire	ON
B0103/12 (05–449)	• SHORT IN D SQUIB CIRCUIT (TO B+)	• Horn button assy (squib) • Spiral cable sub–assy • Airbag sensor assy center • Instrument panel wire	ON
B0105/53 (05–453)	• SHORT IN P SQUIB CIRCUIT	• Instrument panel passenger airbag assy (squib) • Airbag sensor assy center • Instrument panel wire	ON
B0106/54 (05–457)	• OPEN IN P SQUIB CIRCUIT	• Instrument panel passenger airbag assy (squib) • Airbag sensor assy center • Instrument panel wire	ON
B0107/51 (05–460)	• SHORT IN P SQUIB CIRCUIT (TO GROUND)	• Instrument panel passenger airbag assy (squib) • Airbag sensor assy center • Instrument panel wire	ON
B0108/52 (05–463)	• SHORT IN P SQUIB CIRCUIT (TO B+)	• Instrument panel passenger airbag assy (squib) • Airbag sensor assy center • Instrument panel wire	ON
B0110/43 (05–466)	• SHORT IN SIDE SQUIB (RH) CIRCUIT	• Front seat airbag assy RH (squib) • Airbag sensor assy center • Instrument panel wire No.3	Blink
B0111/44 (05–469)	• OPEN IN SIDE SQUIB (RH) CIRCUIT	• Front seat airbag assy RH (squib) • Airbag sensor assy center • Instrument panel wire No.3	Blink
B0112/41 (05–472)	• SHORT IN SIDE SQUIB (RH) CIRCUIT (TO GROUND)	• Front seat airbag assy RH (squib) • Airbag sensor assy center • Instrument panel wire No.3	Blink
B0113/42 (05–475)	• SHORT IN SIDE SQUIB (RH) CIRCUIT (TO B+)	• Front seat airbag assy RH (squib) • Airbag sensor assy center • Instrument panel wire No.3	Blink
B0115/47 (05–478)	• SHORT IN SIDE SQUIB (LH) CIRCUIT	• Front seat airbag assy LH (squib) • Airbag sensor assy center • Instrument panel wire No.3	Blink
B0116/48 (05–481)	• OPEN IN SIDE SQUIB (LH) CIRCUIT	• Front seat airbag assy LH (squib) • Airbag sensor assy center • Instrument panel wire No.3	Blink
B0117/45 (05–484)	• SHORT IN SIDE SQUIB (LH) CIRCUIT (TO GROUND)	• Front seat airbag assy LH (squib) • Airbag sensor assy center • Instrument panel wire No.3	Blink
B0118/46 (05–487)	• SHORT IN SIDE SQUIB (LH) CIRCUIT (TO B+)	• Front seat airbag assy LH (squib) • Airbag sensor assy center • Instrument panel wire No.3	Blink
B0126/B0127/27 (05–490)	• SEAT BELT BUCKLE SWITCH (LH) MALFUNCTION	• Front seat inner belt assy (LH) • Airbag sensor assy center • Instrument panel wire No.3	ON

B0130/63 (05–494)	• SHORT IN P/T SQUIB (RH) CIRCUIT	• Seat belt pretensioner RH (squib) • Airbag sensor assy center • Instrument panel wire No.3	Blink
B0131/64 (05–498)	• OPEN IN P/T SQUIB (RH) CIRCUIT	• Seat belt pretensioner RH (squib) • Airbag sensor assy center • Instrument panel wire No.3	Blink
B0132/61 (05–501)	• SHORT IN P/T SQUIB (RH) CIRCUIT (TO GROUND)	• Seat belt pretensioner RH (squib) • Airbag sensor assy center • Instrument panel wire No.3	Blink
B0133/62 (05–504)	• SHORT IN P/T SQUIB (RH) CIRCUIT (TO B+)	• Seat belt pretensioner RH (squib) • Airbag sensor assy center • Instrument panel wire No.3	Blink
B0135/73 (05–507)	• SHORT IN P/T SQUIB (LH) CIRCUIT	• Seat belt pretensioner LH (squib) • Airbag sensor assy center • Instrument panel wire No.3	Blink
B0136/74 (05–511)	• OPEN IN P/T SQUIB (LH) CIRCUIT	• Seat belt pretensioner LH (squib) • Airbag sensor assy center • Instrument panel wire No.3	Blink
B0137/71 (05–514)	• SHORT IN P/T SQUIB (LH) CIRCUIT (TO GROUND)	• Seat belt pretensioner LH (squib) • Airbag sensor assy center • Instrument panel wire No.3	Blink
B0138/72 (05–517)	• SHORT IN P/T SQUIB (LH) CIRCUIT (TO B+)	• Seat belt pretensioner LH (squib) • Airbag sensor assy center • Instrument panel wire No.3	Blink
B1100/31 (05–520)	• AIRBAG SENSOR ASSY CENTER MALFUNCTION	• Airbag sensor assy center	ON
B1135/24 (05–522)	• HALF CONNECTION DETECTION MALFUNCTION	• Airbag sensor assy center	ON
B1140/32 (05–524)	• SIDE AIRBAG SENSOR ASSY (RH) MALFUNCTION	• Airbag sensor assy center • Side Airbag sensor assy RH • Instrument panel wire No.3	Blink
B1141/33 (05–529)	• SIDE AIRBAG SENSOR ASSY (LH) MALFUNCTION	• Airbag sensor assy center • Side Airbag sensor assy LH • Instrument panel wire No.3	Blink
B1153/25 (05–534)	• SEAT POSITION AIRBAG SENSOR ASSY MALFUNCTION	• Seat position airbag sensor • Airbag sensor assy center • Instrument panel wire No.3 • Wire harness (Seat position airbag sensor – Front seat inner belt assy)	ON
B1156/B1157 /15 (05–542)	• FRONT AIRBAG SENSOR (RH) MALFUNCTION	• Airbag front RH sensor • Airbag sensor assy center • Engine room main Instrument panel wire No.3 • Instrument panel wire	ON
B1158/B1159 /16 (05–548)	• FRONT AIRBAG SENSOR (LH) MALFUNCTION	• Airbag sensor front LH • Airbag sensor assy center • Engine room main Instrument panel wire No.3 • Instrument panel wire	ON
B1180/17 (05–554)	• SHORT IN D SQUIB (2ND STEP) CIRCUIT	• Horn button assy (D squib (2nd step)) • Spiral cable sub–assy • Airbag sensor assy center • Instrument panel wire No.3	ON
B1181/18 (05–558)	• OPEN IN D SQUIB (2ND STEP) CIRCUIT	• Horn button assy (D squib (2nd step)) • Spiral cable sub–assy • Airbag sensor assy center • Instrument panel wire No.3	ON
B1182/19 (05–562)	• SHORT IN D SQUIB (2ND STEP) CIRCUIT (TO GROUND)	• Horn button assy (D squib (2nd step)) • Spiral cable sub–assy • Airbag sensor assy center • Instrument panel wire No.3	ON

B1183/22 (05–566)	• SHORT IN D SQUIB (2ND STEP) CIRCUIT (TO B+)	• Horn button assy (D squib (2nd step)) • Spiral cable sub–assy • Airbag sensor assy center • Instrument panel wire No.3	ON
B1185/57 (05–570)	• SHORT IN P SQUIB (2ND STEP) CIRCUIT	• Instrument panel passenger airbag assy (P squib (2nd step)) • Airbag sensor assy center • Instrument panel wire	ON
B1186/58 (05–573)	• OPEN IN P SQUIB (2ND STEP) CIRCUIT	• Instrument panel passenger airbag assy (P squib (2nd step)) • Airbag sensor assy center • Instrument panel wire	ON
B1187/55 (05–576)	• SHORT IN P SQUIB (2ND STEP) CIRCUIT (TO GROUND)	• Instrument panel passenger airbag assy (P squib (2nd step)) • Airbag sensor assy center • Instrument panel wire	ON
B1188/56 (05–579)	• SHORT IN P SQUIB (2ND STEP) CIRCUIT (TO B+)	• Instrument panel passenger airbag assy (P squib (2nd step)) • Airbag sensor assy center • Instrument panel wire	ON
Normal (05–582)	• SYSTEM NORMAL	–	OFF
	• VOLTAGE SOURCE DROP	• Battery • Airbag sensor assy center	ON

HINT:

- When the SRS warning light remains lit up and the DTC is the normal code, this means a voltage source drops.
  This malfunction is not stored in memory by the Airbag sensor assy center and if the power source voltage returns to normal, the SRS warning light will automatically go out.
- When 2 or more codes are indicated, the codes will be displayed in numeral order starting from the lowest numbered code.
- If a code not listed on the chart is displayed, the Airbag sensor assy center is faulty.
- In the case of any malfunction concerning any open circuit, ground short, or B+ short due to any squib, another malfunction code may not be detected. In this case, correct the malfunction currently being output, and then perform malfunction diagnosis again. Another malfunction code may then be detected.

0525A–13

LOCATION

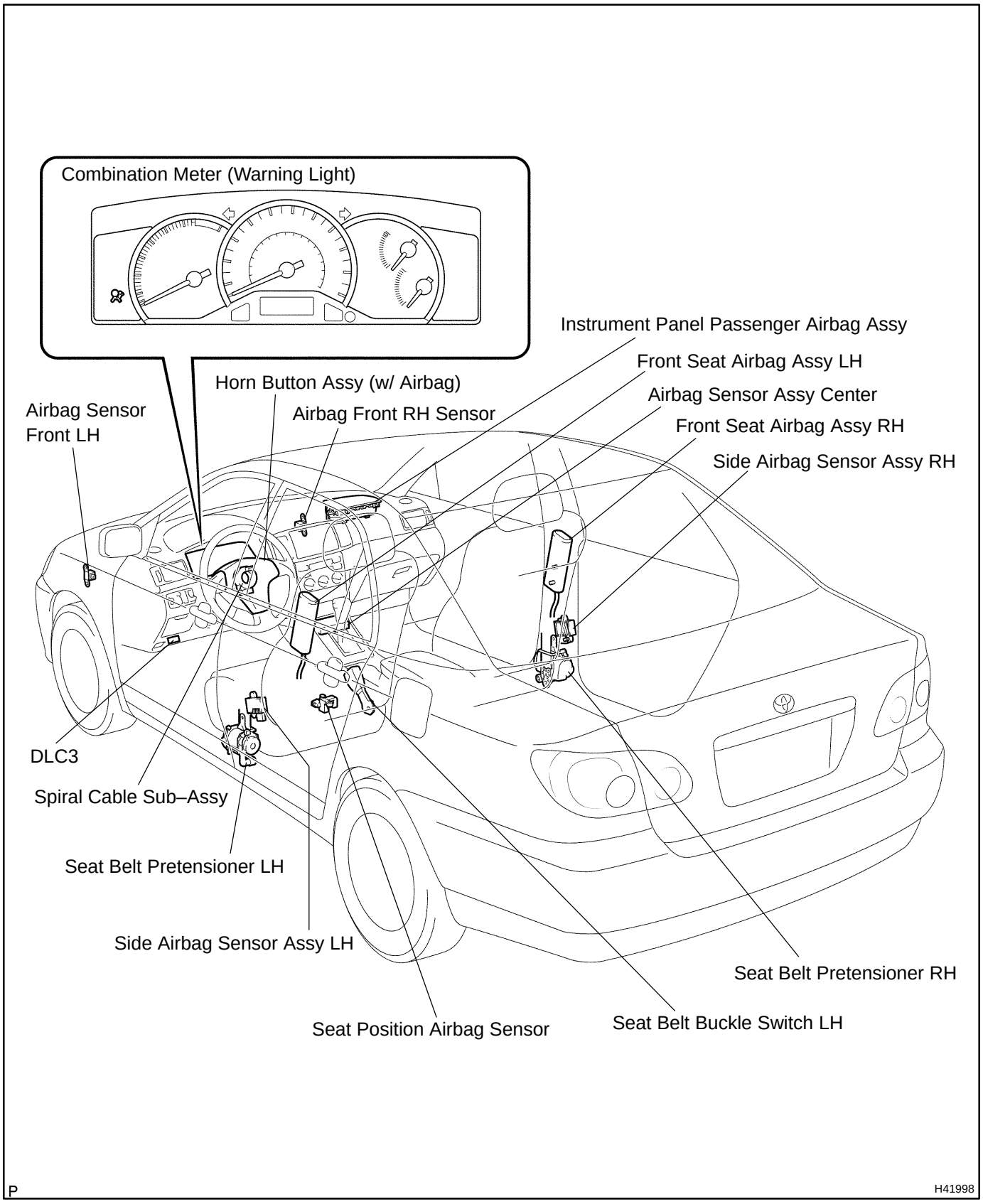

05258–08

PRE–CHECK

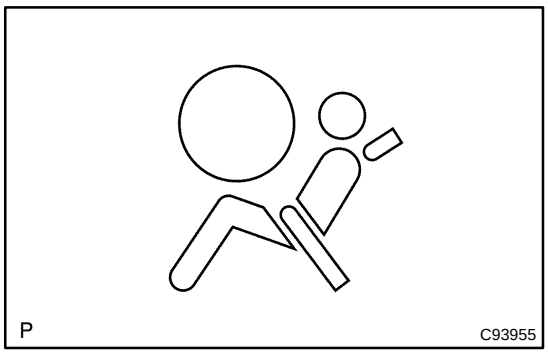

1. SRS WARNING LIGHT CHECK

(a) Turn the ignition switch to the ON position and check that the SRS warning light lights up.

(b) Check that the SRS warning light goes out after approx. 6 seconds.

HINT:

- When the ignition switch is at ON and the SRS warning light remains on or flashes, the airbag sensor assembly has detected a malfunction code.
- If, after approx. 6 second have elapsed, the SRS warning light sometimes lights up, a short in the SRS warning light circuit can be considered likely. Proceed to ”SRS warning light circuit malfunction” on page 05–585 and 05–588.

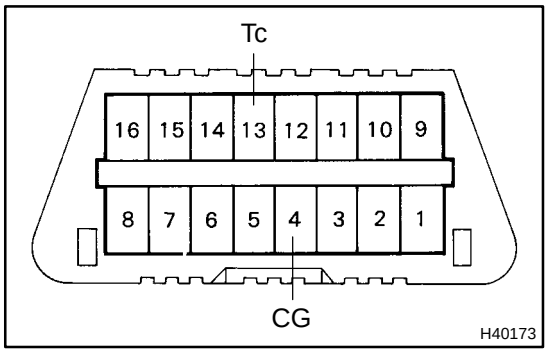

2. DTC CHECK (using diagnosis check wire)

(a) Present troubles codes:

Output the DTC.

(1) Turn the ignition switch to the ON position and wait for approx. 60 seconds.

(2) Using SST, connect terminals Tc and CG of the DLC3.

SST 09843–18040

NOTICE:

Pay due attention to the terminal connecting position to avoid a malfunction.

(b) Past troubles codes:

Output the DTC.

(1) Using service wire, connect terminals Tc and CG of the DLC3.

SST 09843–18040

(2) Turn the ignition switch to the ON position and wait for approx. 60 seconds.

NOTICE:

Pay due attention to the terminal connecting position to avoid a malfunction.

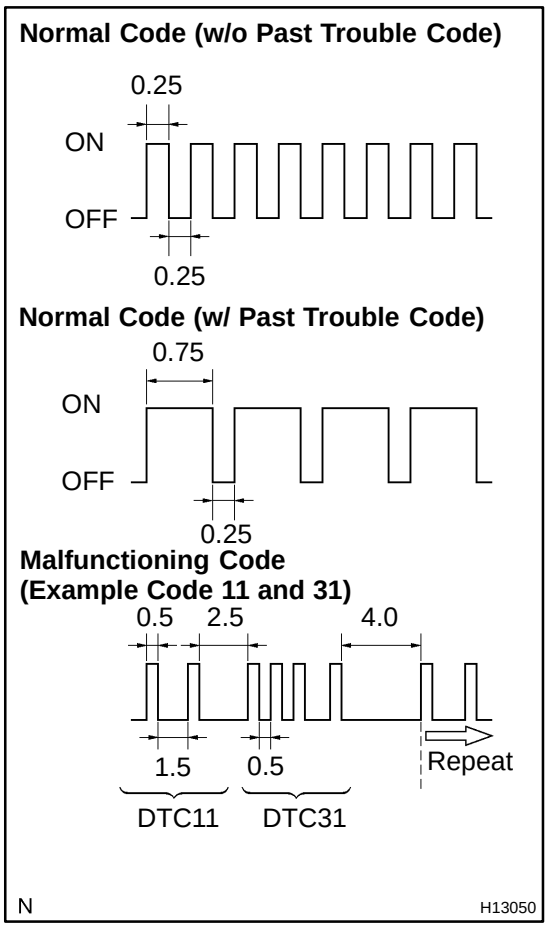

(c) Read the DTC.

Read the 2–digit DTC as indicated by the number of times the SRS warning light blinks. As an example, the blinking patterns, normal, 11 and 31 are shown in the illustration.

- Normal code indication (w/o past trouble code)
  The light will blink 2 times per second.
- Normal code indication (w/ past trouble code)
  When the past troubles code is stored in the airbag sensor assembly, the light blinks only ones a second.
- Malfunction code indication
  The first blinking output indicates the first digit of a 2–digit DTC. After a 1.5–second pause, the second blinking output will indicate the second digit.

If there are 2 or more codes, there will be a 2.5–second pause between each code. After all the codes have been output, there will be a 4.0–second pause and they will all be repeated.

HINT:

In the event of a number of trouble codes, indication will start from the smallest numbered code.

3. DTC CHECK (Using hand–held tester)

(a) Hook up the hand–held tester to the DLC3.

(b) Read the DTCs by following the prompts on the tester screen.

HINT:

Please refer to the hand–held tester operator's manual for further details.

4. DTC CLEARANCE (Not using service wire)

(a) When the ignition switch is turned off, the diagnostic trouble code is cleared.

HINT:

DTC might not be cleared by turning the ignition switch OFF. In this case, proceed to the next step.

5. DTC CLEARANCE (Using service wire)

(a) Using a service wire, connect terminals TC and CG of the DLC3.

(b) Disconnect terminal TC of DLC3 within 10 seconds after the DTC begins to be output, and check if the warning light lights up within 3 seconds.

(c) Within 2.0 seconds to 4.0 seconds after the SRS warning light lights up, connect the terminals TC and CG of the DLC3.

(d) Light the SRS warning light goes off 2.0 to 4.0 seconds after connecting the terminals TC and CG of DLC3, then disconnect the terminal TC of the DLC3 2.0 to 4.0 seconds after the warning light goes off.

(e) Light the SRS warning light on again 3 seconds after disconnecting terminal TC of DLC3, then within 2.0 to 4.0 seconds after the lighting, connect terminals TC and CG of the DLC3.

(f) Check if the SRS warning light goes off 2.0 to 4.0 seconds after connecting terminals TC and CG of DLC3, and the correct code is output 1 second after the SRS warning goes off.

If DTCs are to cleared, repeat the above procedure until the codes are cleared.

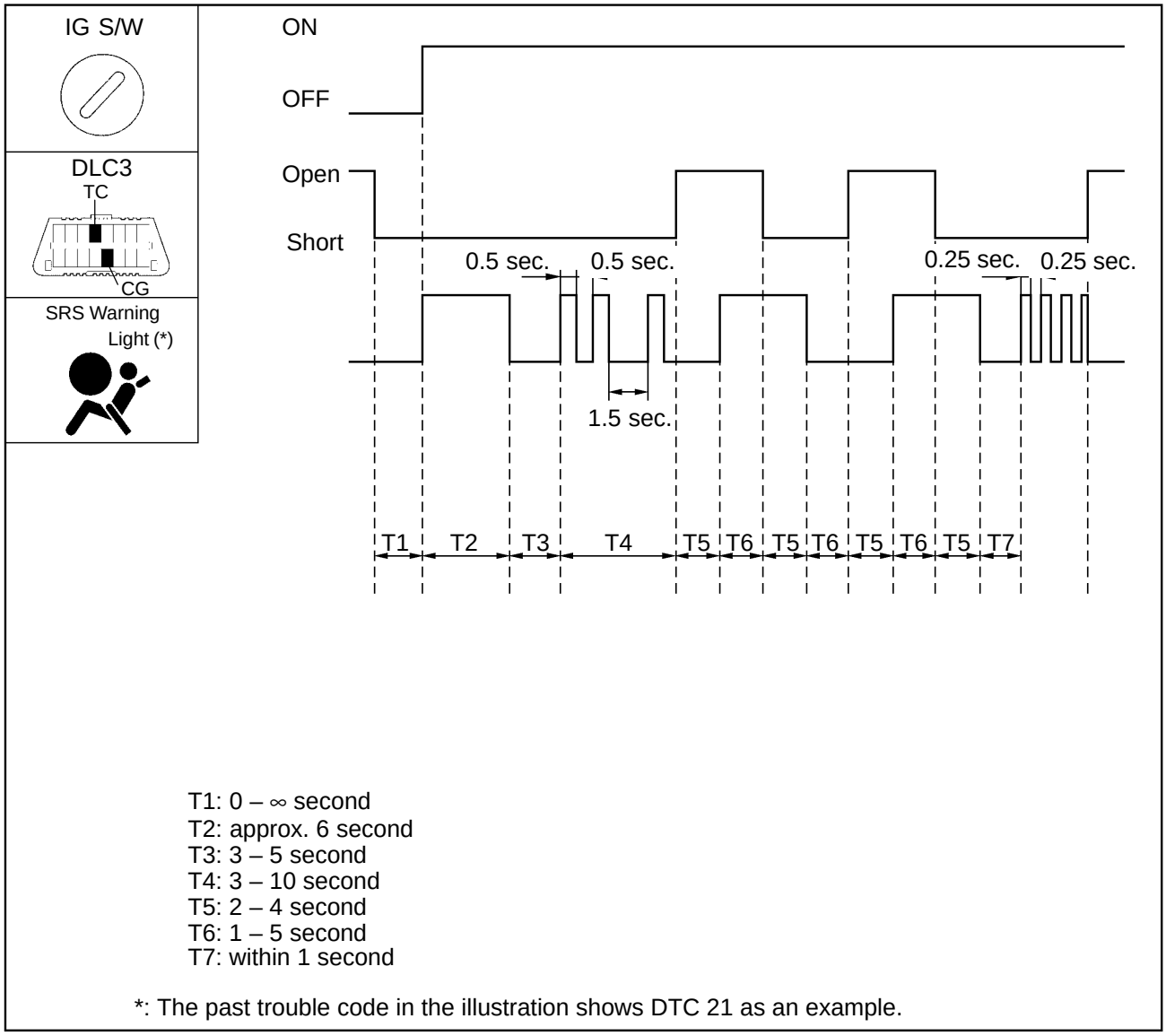

T1: 0 – ∞ second
T2: approx. 6 second
T3: 3 – 5 second
T4: 3 – 10 second
T5: 2 – 4 second
T6: 1 – 5 second
T7: within 1 second

*: The past trouble code in the illustration shows DTC 21 as an example.

H41917

6. DTC CLEARANCE (Using hand–held tester)

(a) Hook up the hand–held tester to the DLC3.

(b) Clear the DTCs by following the prompts on the tester screen.

HINT:

Please refer to the hand–held tester operation's manual for further details.

7. RELEASE METHOD OF AIRBAG ACTIVATION PREVENTION MECHANISM

(a) An airbag activention prevention mechanism is built into the connector for the squib circuit of the SRS. When release of the airbag activation prevention mechanism is directed in the troubleshooting procedure, as shown in the illustration of the connectors on the next pages, insert paper which has the same thickness as the male terminal between the terminal and the short spring.

CAUTION:

Never release the airbag activation prevention mechanism on the squib connector.

NOTICE:

- **Do not release the airbag activation prevention mechanism unless specifically directed by the troubleshooting procedure.**
- **If the inserted paper is too thick the terminal and short spring may be damaged, so always use paper with the same thickness as the male terminal.**

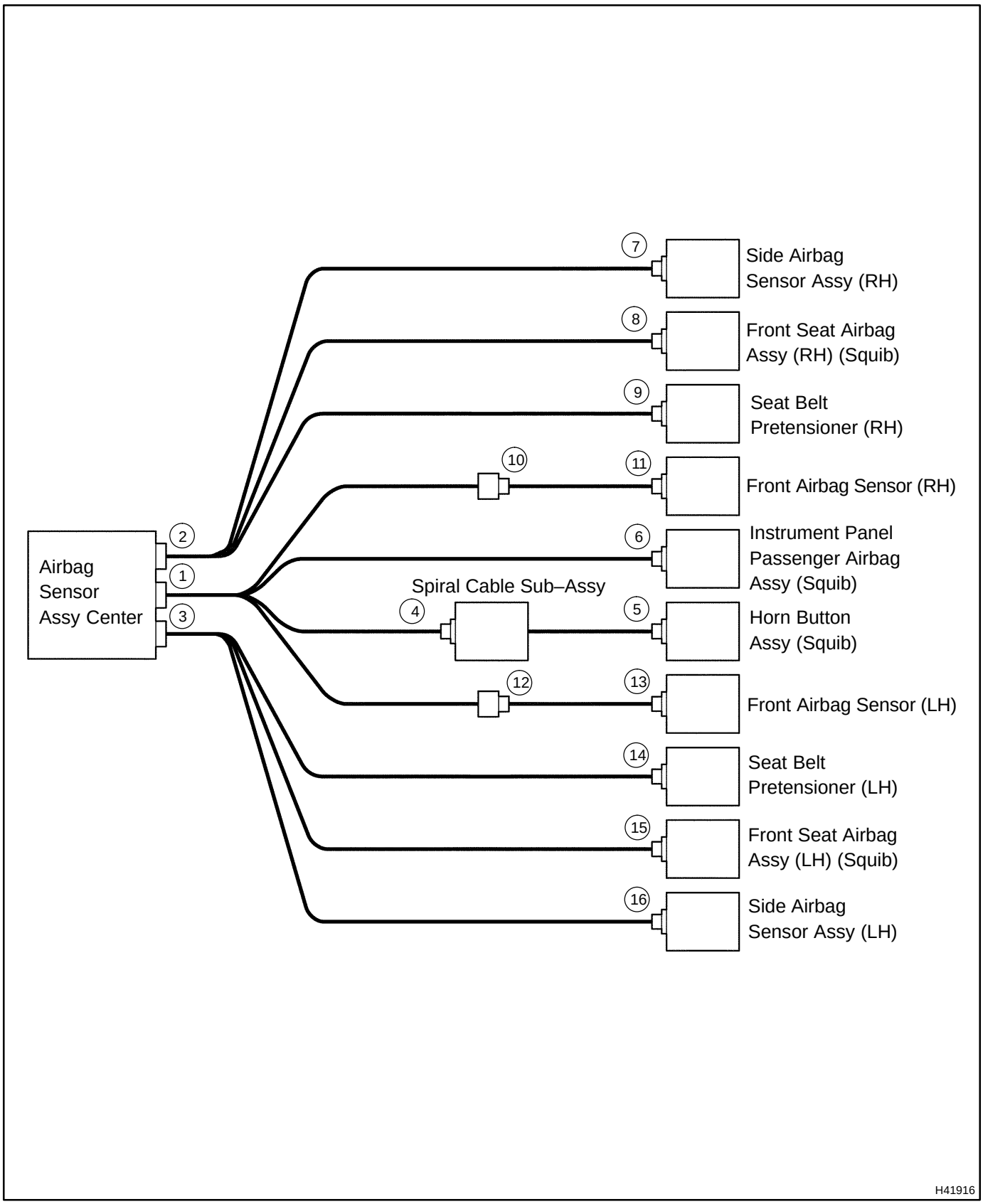
Airbag
Sensor
Assy Center
2
1
3
Spiral Cable Sub–Assy
4
7
Side Airbag
Sensor Assy (RH)
8
Front Seat Airbag
Assy (RH) (Squib)
9
Seat Belt
Pretensioner (RH)
10
11
Front Airbag Sensor (RH)
6
Instrument Panel
Passenger Airbag
Assy (Squib)
5
Horn Button
Assy (Squib)
12
13
Front Airbag Sensor (LH)
14
Seat Belt
Pretensioner (LH)
15
Front Seat Airbag
Assy (LH) (Squib)
16
Side Airbag
Sensor Assy (LH)
H41916

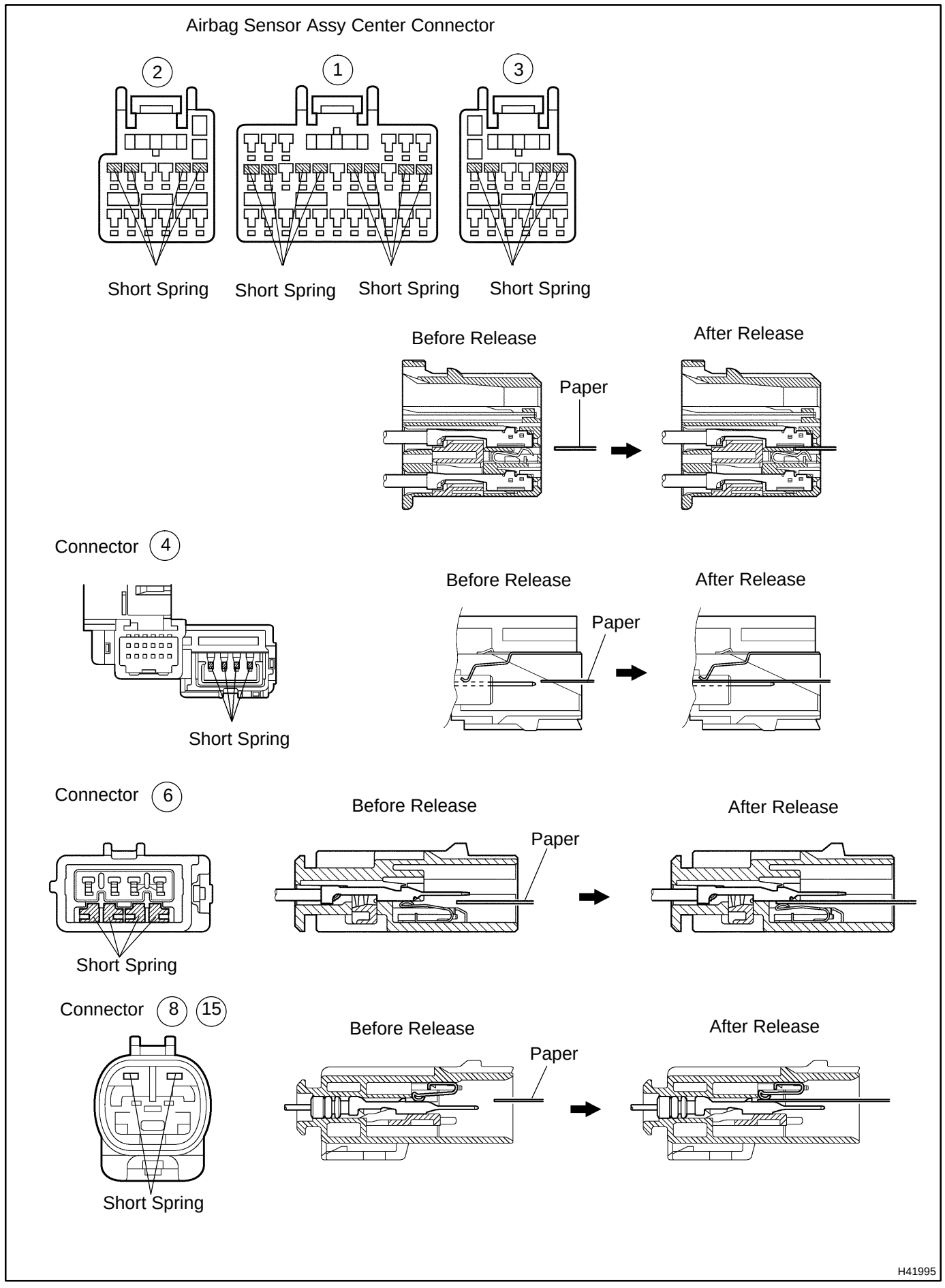
Airbag Sensor Assy Center Connector
2
1
3
Short Spring
Short Spring
Short Spring
Short Spring
Before Release
After Release
Paper
Connector 4
Short Spring
Before Release
After Release
Paper
Connector 6
Short Spring
Before Release
After Release
Paper
Connector 8 15
Short Spring
Before Release
After Release
Paper
H41995

SOURCE VOLTAGE DROP

CIRCUIT DESCRIPTION

The SRS is equipped with a voltage–increase circuit (DC–DC converter) in the airbag sensor assy center in case the source voltage drops.
When the battery voltage drops, the voltage–increase circuit (DC–DC converter) functions to increase the voltage of the SRS to normal voltage.
The diagnosis system malfunction display for this circuit is different from other circuits that is when the SRS warning light remains lit up and the DTC is a normal code, source voltage drop is indicated.
Malfunction in this circuit is not recorded in the airbag sensor assy center, and the source voltage returns to normal, the SRS warning light automatically goes off.

DTC No.	Diagnosis
(Normal)	Source voltage drop

WIRING DIAGRAM

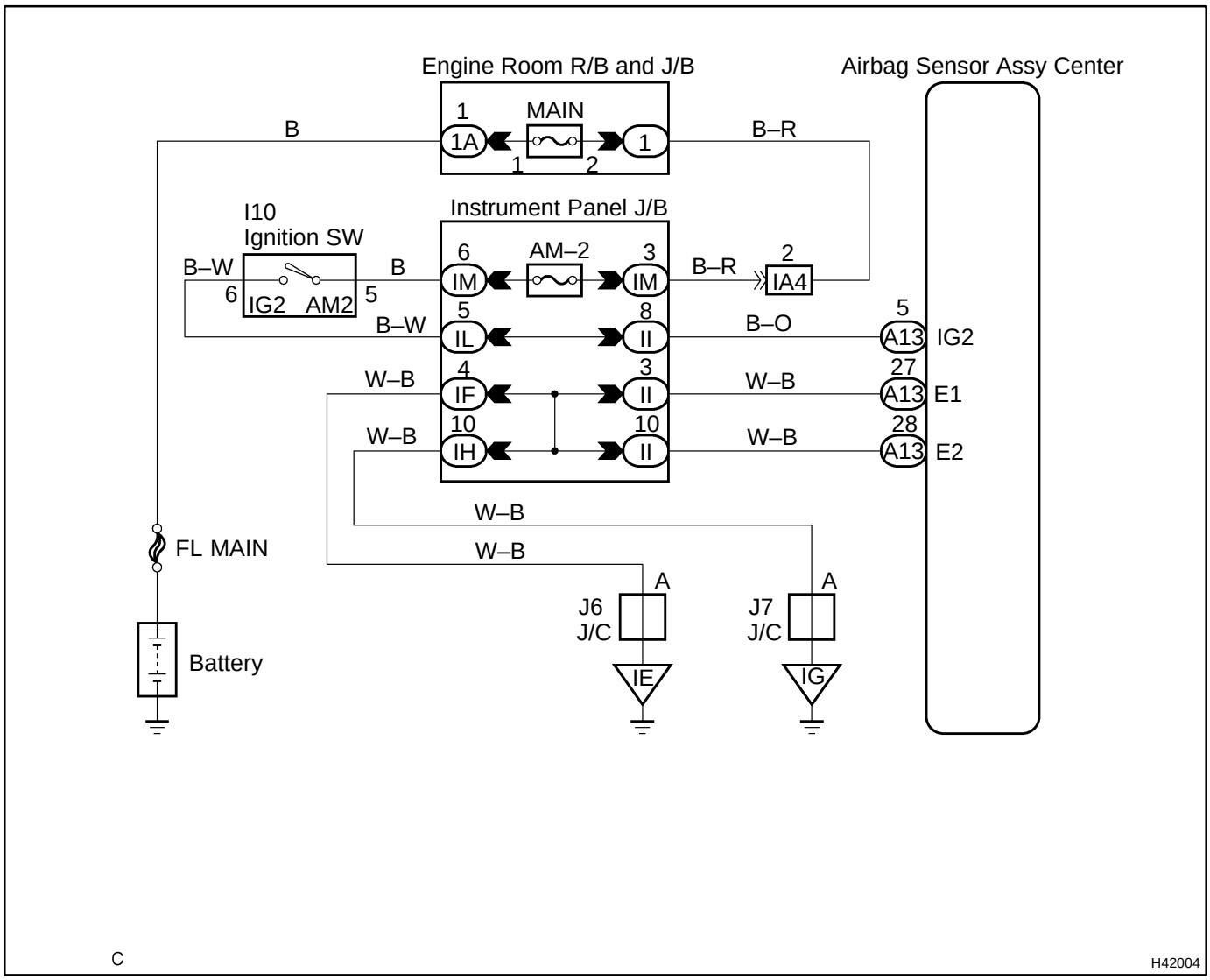

INSPECTION PROCEDURE

1	PREPARE FOR INSPECTION

(a) Disconnect the negative (–) terminal cable from the battery, and wait at least for 90 seconds.
(b) Remove the horn button assy (See page 60–13).
(c) Disconnect the connector of the instrument panel passenger airbag assy (See page 60–26).
(d) Disconnect the connector of the front seat airbag assy RH and LH (See page 60–32).
(e) Disconnect the connector of the seat belt pretensioner RH and LH (See page 61–9).
(f) Disconnect the connectors of the airbag sensor assy center (See page 60–38).
(g) Disconnect the connector of the airbag front RH sensor and airbag sensor front LH (See page 60–40 and 60–42).
(h) Disconnect the connector of the side airbag sensor assy RH and LH (See page 60–44).
(i) Disconnect the connector of the seat position airbag sensor (See page 60–46).

CAUTION:
Store the horn button assy, instrument panel passenger airbag assy and front seat airbag assy with the front surface facing upward.

2	CHECK SOURCE VOLTAGE

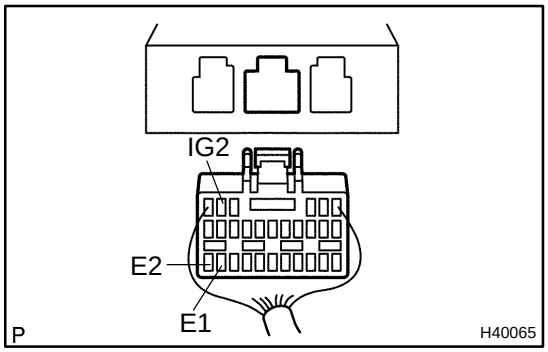

(a) Connect the negative (–) terminal cable to the battery, and wait at least for 2 seconds.
(b) Turn the ignition switch to ON, and wait at least for 60 seconds.
(c) Measure the voltage between E1 (E2) and terminal IG2 on the sensor and operate electric system (defogger, wiper, headlight, heater blower, etc.).
OK:
Voltage: 10 – 14 V

NG → **REPAIR OR REPLACE HARNESS BETWEEN BATTERY AND AIRBAG SENSOR ASSY CENTER,AND CHARGING SYSTEM**

OK

3	CHECK SRS WARNING LIGHT TURN OFF

(a) Turn the ignition switch to LOCK.
(b) Disconnect the negative (–) terminal cable from the battery, and wait at least for 90 seconds.
(c) Connect the horn button assy connectors.
(d) Connect the instrument panel passenger airbag assy connector.
(e) Connect the front seat airbag assy RH and LH connectors.
(f) Connect the seat belt pretensioner RH and LH connectors.
(g) Connect the airbag sensor assy center connectors.
(h) Connect the front airbag sensor RH and LH connectors.
(i) Connect the side airbag sensor assy RH and LH connectors.
(j) Connect the seat position airbag sensor connector.
(k) Connect the negative (–) terminal cable to the battery.
(l) Turn the ignition switch to ON, and wait at least for 60 seconds.
(m) Operate electric system (defogger, wiper headlight, heater blower, etc.) and check that SRS warning light goes off.

OK:

SRS warning light is not light up.

NG → **REPAIR OR REPLACE HARNESS BETWEEN BATTERY AND AIRBAG SENSOR ASSY CENTER,AND CHARGING SYSTEM**

OK

4	CHECK AIR BAG SENSOR ASSY CENTER

SST 09843–18040

(a) Turn the ignition switch to LOCK.
(b) Disconnect the negative (–) terminal cable from the battery, and wait at least for 90 seconds.
(c) Connect the negative (–) terminal cable to the battery, and wait at least for 2 seconds.
(d) Turn the ignition switch to ON, and wait at least for 20 seconds.
(e) Clear the DTC stored in memory (See page 05–424).
(f) Turn the ignition switch to LOCK, and wait at least for 20 seconds.
(g) Turn the ignition switch to ON, and wait at least for 20 seconds.
(h) Check the DTC (See page 05–424).

OK:

DTC is not output.

NG → **REPLACE AIR BAG SENSOR ASSY CENTER**

OK

USE SIMULATION METHOD TO CHECK

SRS WARNING LIGHT CIRCUIT MALFUNCTION (DOES NOT LIGHT UP, WHEN IGNITION SWITCH IS TURNED TO ON)

CIRCUIT DESCRIPTION

The SRS warning light is located on the combination meter.
When the SRS is normal, the SRS warning light lights up for approx. 6 seconds after the ignition switch is turned from the LOCK position to ON position, and then turns off automatically.
If there is a malfunction is the SRS, the SRS warning light lights up to inform the driver of the abnormality.
When terminals Tc and CG of the DLC3 are connected, the DTC is displayed by blinking the SRS warning light.

WIRING DIAGRAM

See page 05–585.

INSPECTION PROCEDURE

1	CHECK SOURCE VOLTAGE

(a) Measure the voltage of the battery.
OK:
Voltage: 10 – 14 V

NG → **REPAIR OR REPLACE HARNESS BETWEEN BATTERY AND AIRBAG SENSOR ASSY CENTER,AND CHARGING SYSTEM**

OK

2	CHECK AIR BAG SENSOR ASSY CENTER

(a) Disconnect the negative (–) terminal cable from the battery, and wait at least for 90 seconds.
(b) Disconnect the connectors from the airbag sensor assy center.
(c) Connect the negative (–) terminal cable to the battery, and wait at least for 2 seconds.
(d) Turn the ignition switch to ON.
(e) Check SRS warning light light up in the combination meter assy.
OK:
Not SRS warning light light up.

NG → **REPLACE AIR BAG SENSOR ASSY CENTER**

OK

3	CHECK WIRE HARNESS(COMBINATION METER ASSY – AIRBAG SENSOR ASSY CENTER)

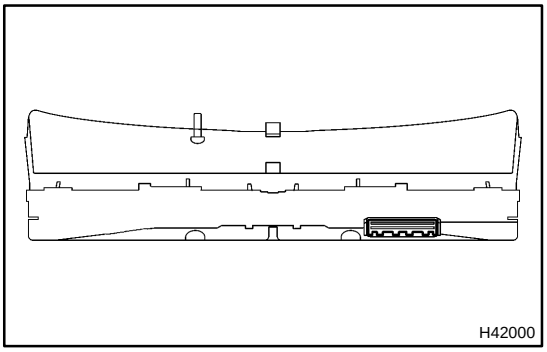

(a) Turn the ignition switch to LOCK.
(b) Disconnect the negative (–) terminal cable from the battery, and wait at least for 90 seconds.
(c) Disconnect the connector from the combination meter.

Airbag Sensor Assy Center:

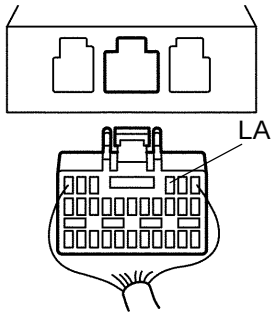

Combination Meter:

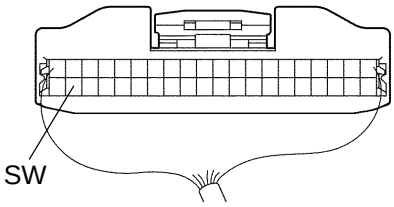

(d) Connect the negative (–) terminal cable to the battery, and wait at least for 2 seconds.
(e) Turn the ignition switch to ON.
(f) For the connector (on the airbag sensor assy center side) between the airbag sensor assy center and the combination meter, measure the voltage between LA and body ground.
OK:
Voltage: Below 1 V

NG → **REPAIR OR REPLACE HARNESS BETWEEN AIRBAG SENSOR ASSY CENTER AND COMBINATION METER ASSY**

OK

REPAIR OR REPLACE COMBINATION METER ASSY OR WIRE HARNESS BETWEEN COMBINATION METER ASSY AND BATTERY

SRS WARNING LIGHT CIRCUIT MALFUNCTION (ALWAYS LIGHT UP, WHEN DTC IS NOT OUTPUT)

CIRCUIT DESCRIPTION

The SRS warning light is located on the combination meter.
When the SRS is normal, the SRS warning light lights up for approx. 6 seconds after the ignition switch is turned from the LOCK position to ON position, and then turns off automatically.
If there is a malfunction in the SRS, the SRS warning light lights up to inform the driver of the abnormality. When terminals Tc and CG of the DLC3 are connected, the DTC is displayed by blinking the SRS warning light.

WIRING DIAGRAM

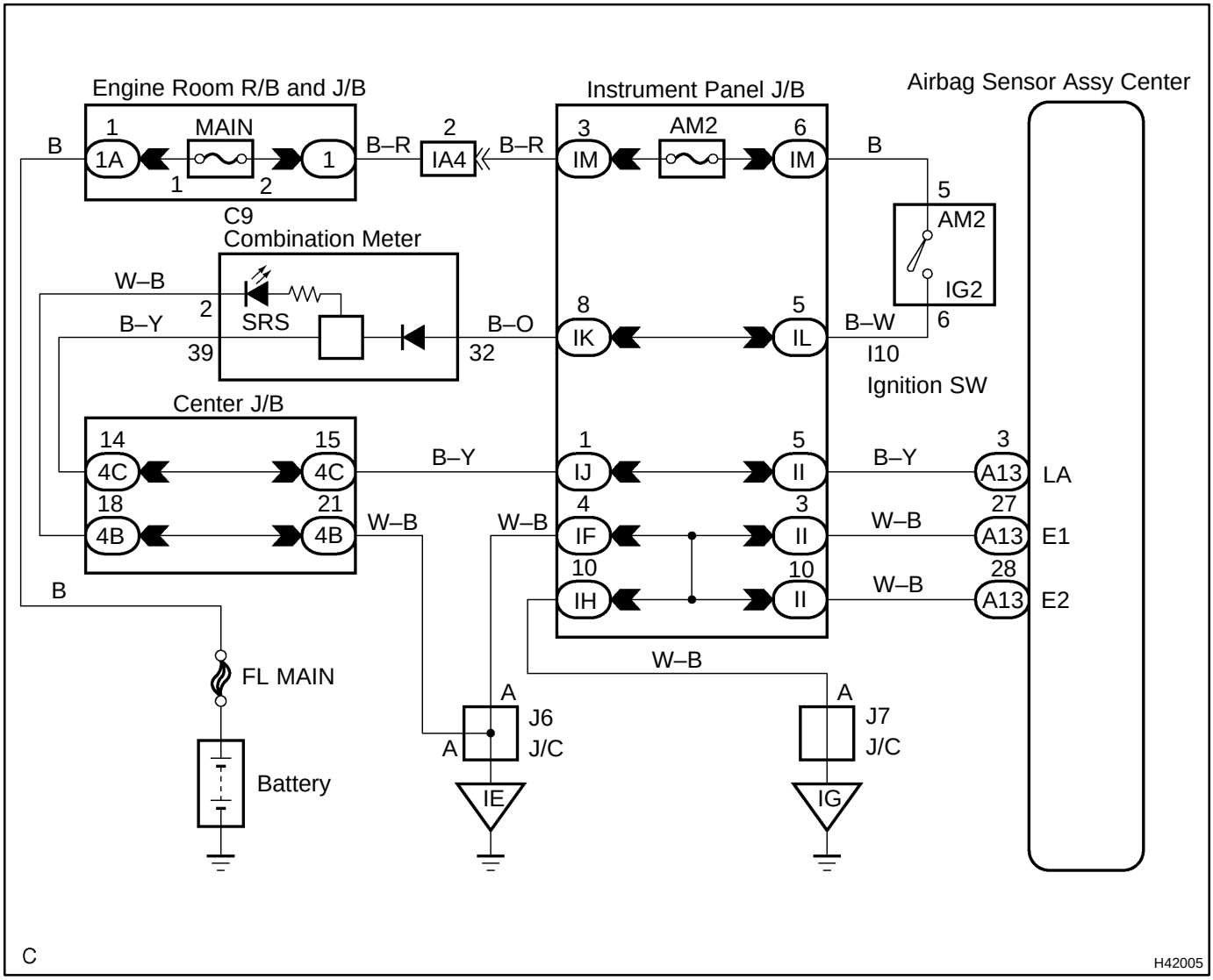

INSPECTION PROCEDURE

1	CHECK CONNECTOR

(a) Disconnect the negative (–) terminal cable from the battery, and wait at least for 90 seconds.
(b) Check the connection of the combination meter connector and the airbag sensor assy center connectors.
OK:
The connectors are connected.

NG → **CONNECT CONNECTORS**

OK

2	CHECK COMBINATION METER ASSY

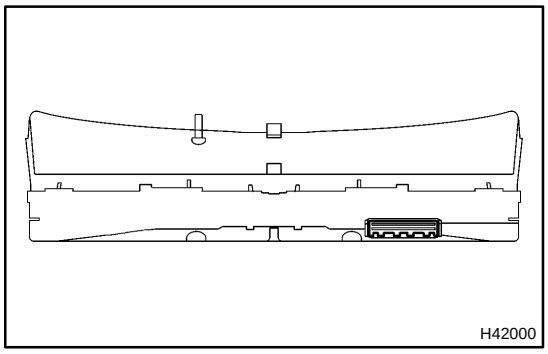

(a) Disconnect the connector from the combination meter.
(b) Connect the negative (–) terminal cable to the battery, and wait at least for 2 seconds.

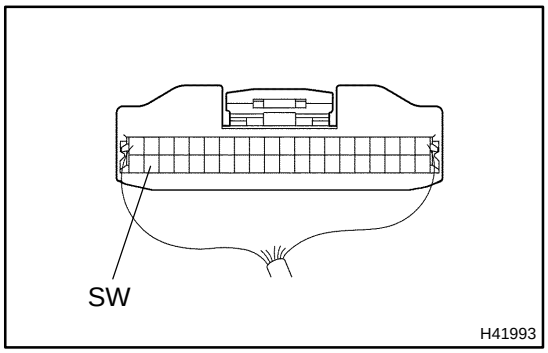

(c) Turn the ignition switch to ON, and wait at least for 6 seconds.
(d) Measure the voltage between SW and body ground.
OK:
Voltage: Above 8 V

NG → **REPLACE COMBINATION METER ASSY**

OK

3	CHECK INSTRUMENT PANEL WIRE(AIRBAG SENSOR ASSY CENTER–COMBINATION METER ASSY)

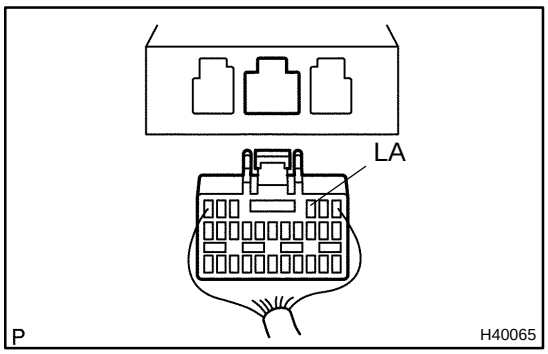

(a) Turn the ignition switch to LOCK.
(b) Disconnect the negative (–) terminal cable from the battery, and wait at least for 90 seconds.
(c) Disconnect the connector from the airbag sensor assy center.
(d) Measure the resistance between LA and body ground.
OK:
Resistance: 1MΩ or Higher

NG → **REPAIR OR REPLACE INSTRUMENT PANEL WIRE (AIRBAG SENSOR ASSY CENTER – COMBINATION METER ASSY)**

OK

REPLACE AIR BAG SENSOR ASSY CENTER

4	CHECK INSTRUMENT PANEL WIRE(AIRBAG SENSOR ASSY CENTER–COMBINATION METER ASSY)

Airbag Sensor Assy Center:

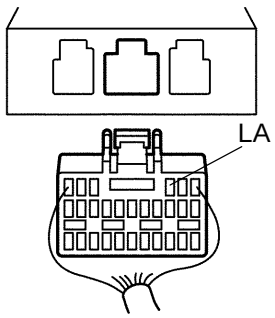

Combination Meter:

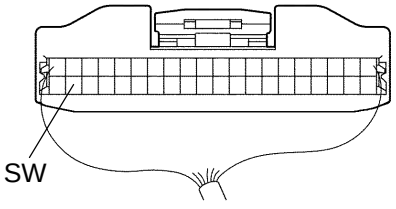

(a) For the connector (on the airbag sensor assy center side) between the combination meter and the airbag sensor assy center, measure the resistance between SW and LA.
OK:
Resistance: Below 1 Ω

NG → **REPAIR OR REPLACE INSTRUMENT PANEL WIRE (AIRBAG SENSOR ASSY CENTER – COMBINATION METER ASSY)**

OK

REPLACE AIR BAG SENSOR ASSY CENTER

0525C–13

PROBLEM SYMPTOMS TABLE

HINT:

Proceed with troubleshooting of each circuit in the table below.

Symptom	Suspect Area	See page
• When the ignition switch is in the ON position, the SRS warning light sometimes comes on after approximately 6 seconds.	• SRS warning light circuit malfunction (Always lights up, when DTC is not output).	05–585
• SRS warning light always comes on even when DTC is not output.		
• With the ignition switch is in the ON position, the SRS warning light does not come on.	• SRS warning light circuit malfunction (Does not light up, when ignition switch is turned to ON).	05–588
• Although a SRS warning light operates normally, DTC or a normal system code is not displayed.	• TC terminal circuit	05–590
• Although the terminals TC and CG are not connected, DTC or a normal system code are displayed.		

TC TERMINAL CIRCUIT

CIRCUIT DESCRIPTION

DTC output mode is set by connecting between TC and CG of the DLC3.
The DTCs are displayed by blinking the SRS warning light.

WIRING DIAGRAM

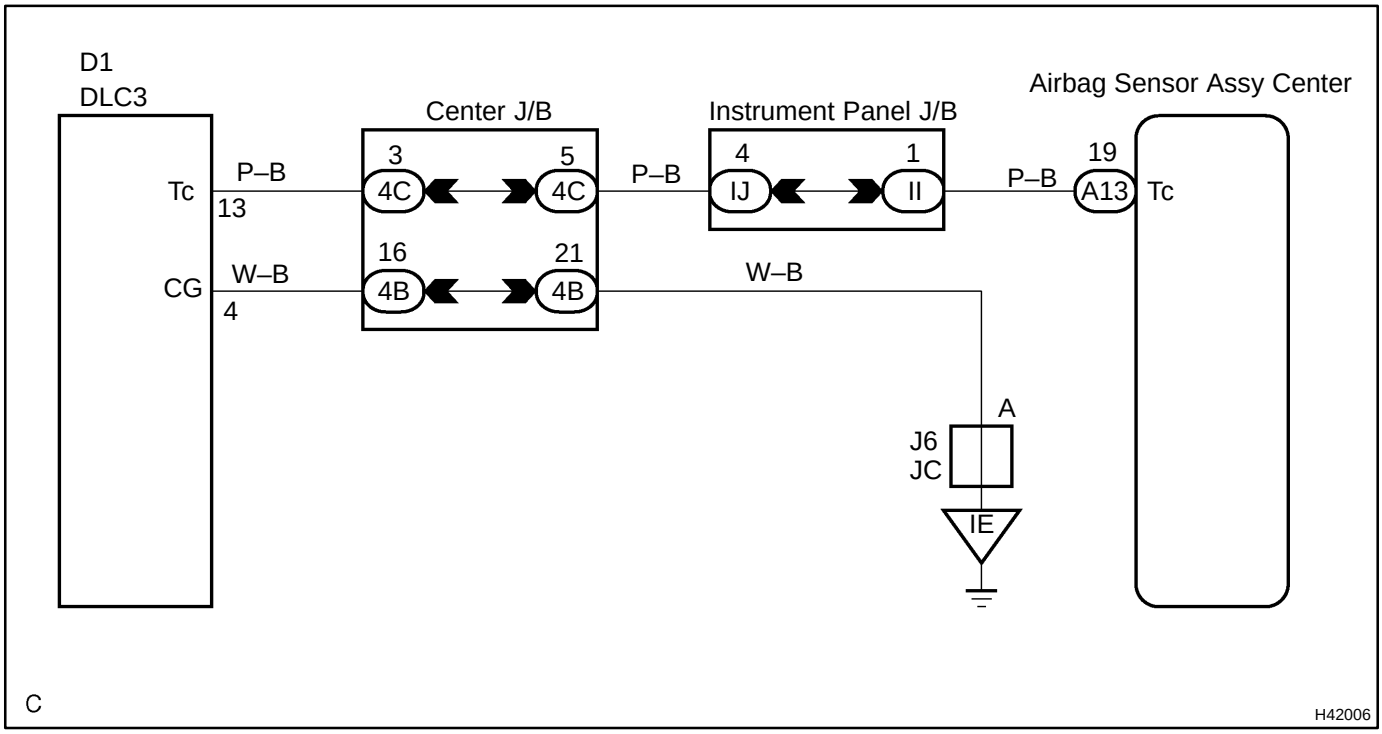

HINT:
When each warning light stays blinking, ground short in the wiring until the terminal TC of the DLC3 or internal ground short in each ECU is suspected.

INSPECTION PROCEDURE

1 CHECK WIRE HARNESS(DLC3 – AIRBAG SENSOR ASSY CENTER)

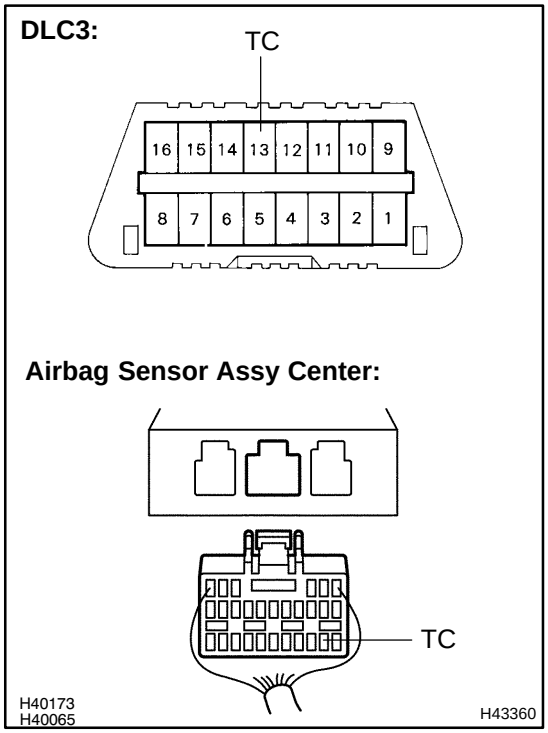

(a) Turn the ignition switch to the LOCK position.
(b) Disconnect the aribag sensor assy center connector.
(c) Measure the resistance according to the value(s) in the table below.

Standard:

Tester connection	Condition	Specified condition
TC – TC	Always	Below 1 Ω

NG → **REPAIR OR REPLACE WIRE HARNESS(TC of ELC3 – TC of AIRBAG SENSOR ASSY CENTER)**

OK

2 CHECK WIRE HARNESS(CG of DLC3 – BODY GROUND)

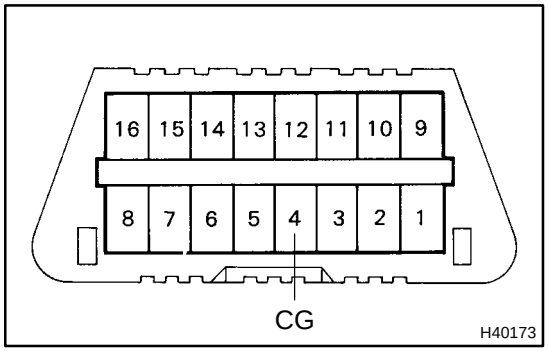

(a) Measure the resistance according to the value(s) in the table below.

Standard:

Tester connection	Condition	Specified condition
CG – Body ground	Always	Below 1 Ω

NG → **REPAIR OR REPLACE WIRE HARNESS(CG of DLC3 – BODY GROUND)**

OK

3	CHECK WIRE HARNESS(TC of AIRBAG SENSOR ASSY CENTER – BODY GROUND)

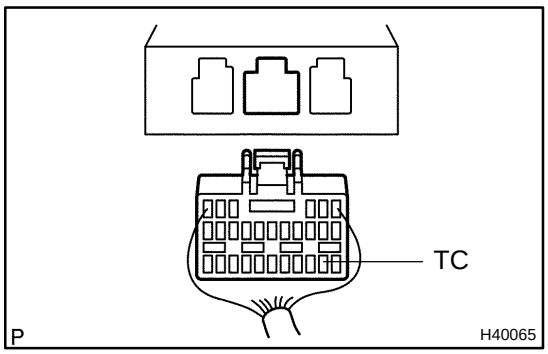

(a) Measure the resistance according to the value(s) in the table below.

Standard:

Tester connection	Condition	Specified condition
TC – Body ground	Always	1 MΩ or Higher

NG → **REPAIR OR REPLACE WIRE HARNESS AND EACH ECU**

OK

REPLACE AIR BAG SENSOR ASSY CENTER

05DQA–01

TERMINALS OF ECU

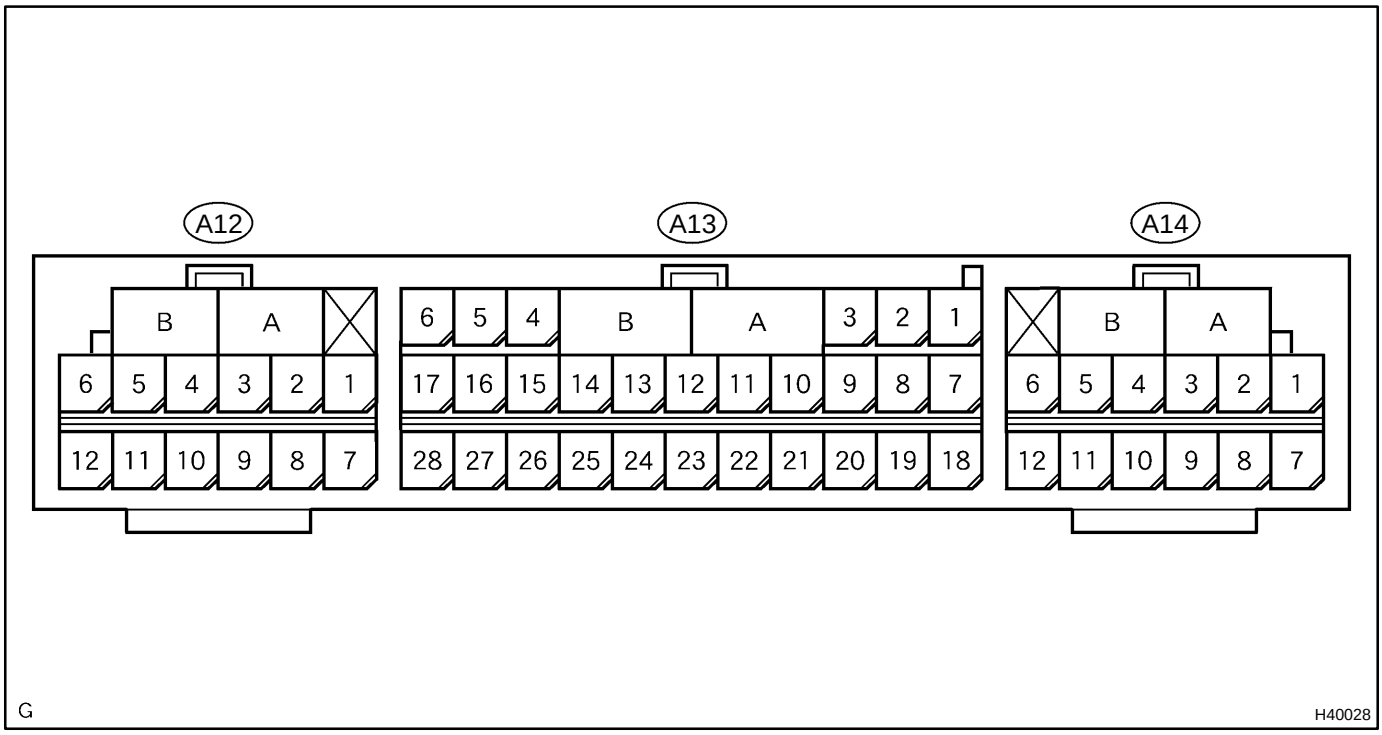

No.	Symbol	Terminal Name
A	–	Electrical Connector Check Mechanism
B	–	Electrical Connector Check Mechanism
A13–3	LA	SRS Warning Light
A13–5	IG2	Power Source (IG2 Fuse)
A13–7	P2–	Squib (Passenger (2 step))
A13–8	P2+	Squib (Passenger (2 step))
A13–9	+SR	Front Airbag Sensor (RH)
A13–10	P+	Squib (Passenger)
A13–11	P–	Squib (Passenger)
A13–12	SIL	Diagnosis
A13–13	D–	Squib (Driver)
A13–14	D+	Squib (Driver)
A13–15	+SL	Airbag Front Sensor (LH)
A13–16	D2+	Squib (Driver (2 step))
A13–17	D2–	Squib (Driver (2 step))
A13–19	Tc	Diagnosis
A13–20	–SR	Airbag Front Sensor (RH)
A13–23	GSW2	ECM
A13–26	–SL	AIrbag Front Sensor (LH)
A13–27	E1	Ground
A13–28	E2	Ground
A12–1	PL–	Squib (Seat Belt Pretensioner, LH)
A12–2	PL+	Squib (Seat Belt Pretensioner, LH)
A12–3	LSP+	Seat Position Sensor
A12–4	LSP–	Seat Position Sensor
A12–5	SFL–	Squib (Side, LH)
A12–6	SFL+	Squib (Side, LH)
A12–7	VUPL	Side Airbag Sensor Assy (LH)
A12–9	SSL–	Side Airbag Sensor Assy (LH)

No.	Symbol	Terminal Name
A12–10	FSL	Side Airbag Sensor Assy (LH)
A12–11	LBE+	Seat Belt Buckle Switch (LH)
A12–12	ESL	Side Airbag Sensor Assy (LH)
A14–1	SFR+	Squib (Side, RH)
A14–2	SFR–	Squib (Side, RH)
A14–5	PR+	Squib (Seat Belt Pretensioner, RH)
A14–6	PR–	Squib (Seat Belt Pretensioner, RH)
A14–7	ESR	Side Airbag Sensor Assy (RH)
A14–9	FSR	Side Airbag Sensor Assy (RH)
A14–10	SSR–	Side Airbag Sensor Assy (RH)
A14–12	VUPR	Side Airbag Sensor Assy (RH)

SUPPLEMENTAL RESTRAINT SYSTEM (Apr., 2003)

05256–15

HOW TO PROCEED WITH TROUBLESHOOTING

The hand–held tester can be used at step 4, 6, 8 and 9.

1	VEHICLE BROUGHT TO WORKSHOP

2	CUSTOMER PROBLEM ANALYSIS (See page 05–423)

3	WARNING LIGHT CHECK (See page 05–424)

4	THE DTCs CHECK (Present and Past DTCs) (See page 05–424)

- DTCs IS OUTPUT (INCLUDING NORMAL SYSTEM CODE): Go to step 5
- DTCs IS NOT OUTPUT: PROBLEM SYMPTOMS TABLE (See page 05–436)

5	THE DTCs CHART (See page 05–430)

6	CIRCUIT INSPECTION (See page 05–437 to 05–579)

- TROUBLE CODE IS OUTPUT: Go to step 7
- NORMAL SYSTEM CODE IS OUTPUT: Go to step 11

7	REPAIR

8	CLEAR THE DTCs (Present and Past DTCs) (See page 05–424)

9	THE DTCs CHECK (Present and Past DTCs) (See page 05–424)

→ DTCs IS NOT OUTPUT: Go to step 10

→ DTCs IS OUTPUT: Go to step 5

10	SYMPTOM SIMULATION (See page 01–20)

→ WARNING LIGHT REMAINS OFF: Go to step 11

→ WARNING LIGHT IS ON: Go to step 5

11	CONFIRMATION TEST

END

057RU–01

CUSTOMER PROBLEM ANALYSIS CHECK

TVIP SYSTEM Check Sheet

Inspector's name: _____

Customer's Name		**Registration No.**	
		Registration Year	
		Frame No.	
Date Vehicle Brought in	/ /	**Odometer Reading**	**km Mile**

Date Problem First Occurred		/ /
Frequency Problem Occurs		☐ Constant ☐ Sometimes (Times per day, month) ☐ Once only
Weather Conditions When Problem Occurred	**Weather**	☐ Fine ☐ Cloudy ☐ Rainy ☐ Snowy ☐ Various/Others
	Outdoor temperature	☐ Hot ☐ Warm ☐ Cool ☐ Cold (Approx. °F (°C))

Problem Symptom

☐ TVIP system cannot be set.		
☐ Indicator light does not flash when the TVIP system is set. (It stays on or does not light at all.)		
☐ TVIP system does not operate.	☐ When unlocked using the front door lock knob. ☐ When the doors or luggage is opened.	Malfunction ☐ Horn only ☐ Headlights only ☐ Hazard lights only ☐ Room light only ☐ Forced door lock operation only
☐ System cannot be canceled, once set.	☐ When door is unlocked using key or wireless door lock control system. ☐ When the key is inserted in the ignition key cylinder and turned to ACC or ON position. (However, only when the system has never operated)	
☐ System cannot be canceled during warning operation.	☐ When door is unlocked using key or wireless door lock control system. ☐ When the key is inserted in the ignition key cylinder and turned to ON position.	
☐ Warning operation starts when the system is set and the door is opened with the key.		
☐ Others.		

DOOR COURTESY SWITCH CIRCUIT

CIRCUIT DESCRIPTION

The door courtesy switch turns ON when the door is opened and OFF when the door is closed.

WIRING DIAGRAM

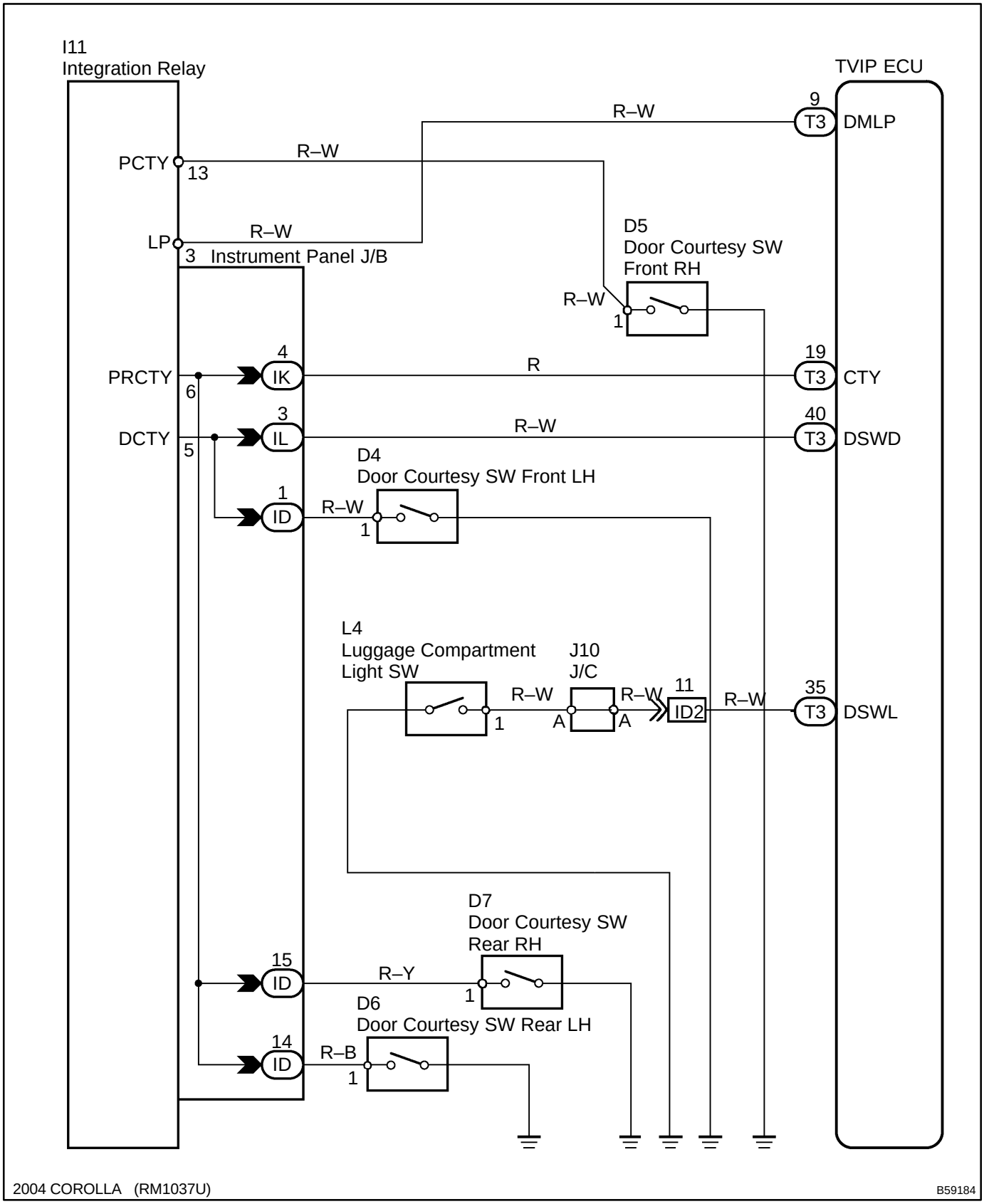

2004 COROLLA (RM1037U) B59184

INSPECTION PROCEDURE

1 CHECK COURTESY LAMP SWITCH

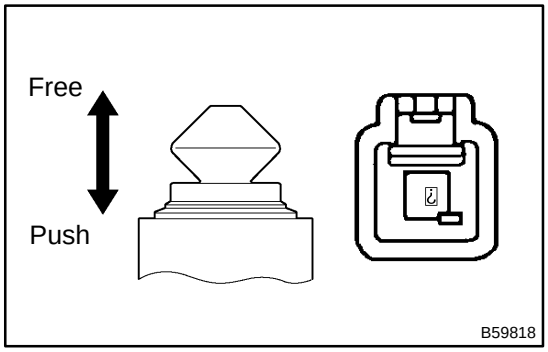

(a) Check the courtesy switch, as shown in the illustration and table.

Standard:

Terminal No.	Switch position	Specified condition
1 ⇔ Body ground	Push	Continuity
	Free	No continuity

NG → **REPLACE COURTESY LAMP SWITCH**

OK

2 CHECK WIRE HARNESS (INTEGRATION RELAY ⇔ DOOR COURTESY SW)

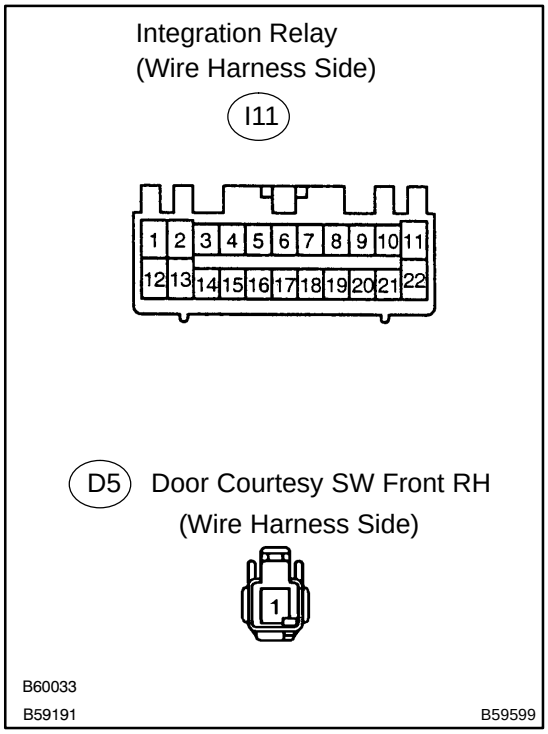

(a) Disconnect the integration relay and door courtesy connectors.

(b) Check the continuity between the terminals of the integration relay and door courtesy switch connectors, as shown in the illustration and table.

Standard:

Terminal No. (Integration relay ⇔ Door courtesy SW)	Specified condition
I11–13 ⇔ D5–1	Continuity

Integration Relay (Instrument Panel J/B)
(Wire Harness Side)

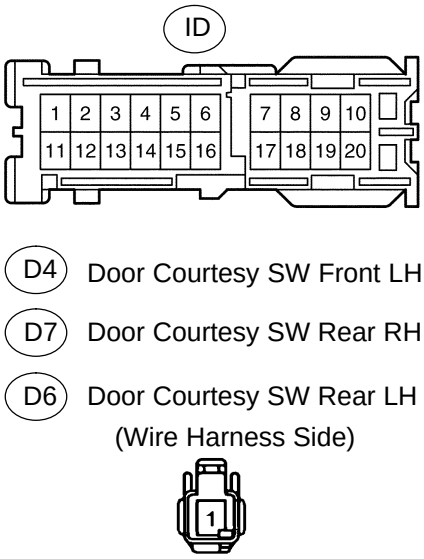

(c) Disconnect the each door courtesy switch connectors.
(d) Check the continuity between the terminals of the integration relay and door courtesy switch connectors, as shown in the illustration and table.

Standard:

Terminal No. (Integration relay ⇔ Door courtesy SW)	Specified condition
ID–1 ⇔ D4–1	Continuity
ID–15 ⇔ D7–1	
ID–14 ⇔ D6–1	

NG → **REPAIR OR REPLACE WIRE HARNESS AND CONNECTOR**

OK

3 CHECK WIRE HARNESS (TVIP ECU ⇔ LUGGAGE COMPARTMENT LIGHT SW)

TVIP ECU
(Wire Harness Side)

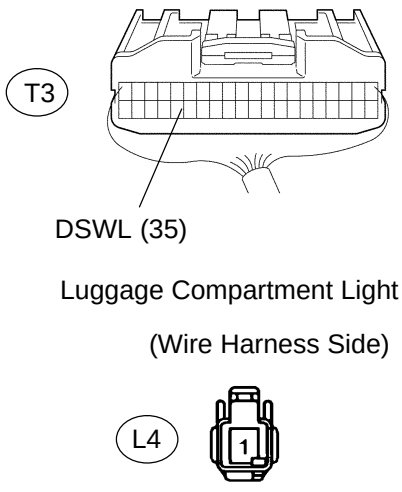

(a) Disconnect the TVIP ECU and luggage comportment light switch connectors.
(b) Check the continuity between the terminals of the TVIP ECU and luggage compartment light switch connectors, as shown in the illustration and table.

Standard:

Symbols (Terminal No.) (TVIP ECU ⇔ Luggage compartment light SW)	Specified condition
DSWL (T3–35) ⇔ L4–1	Continuity

NG → **REPAIR OR REPLACE WIRE HARNESS AND CONNECTOR**

OK

PROCEED TO NEXT CIRCUIT INSPECTION SHOWN ON PROBLEM SYMPTOMS TABLE
(See page 01–30)

DOOR KEY LOCK AND UNLOCK SWITCH CIRCUIT

CIRCUIT DESCRIPTION

The door key lock and unlock switch is built in the door lock motor.

WIRING DIAGRAM

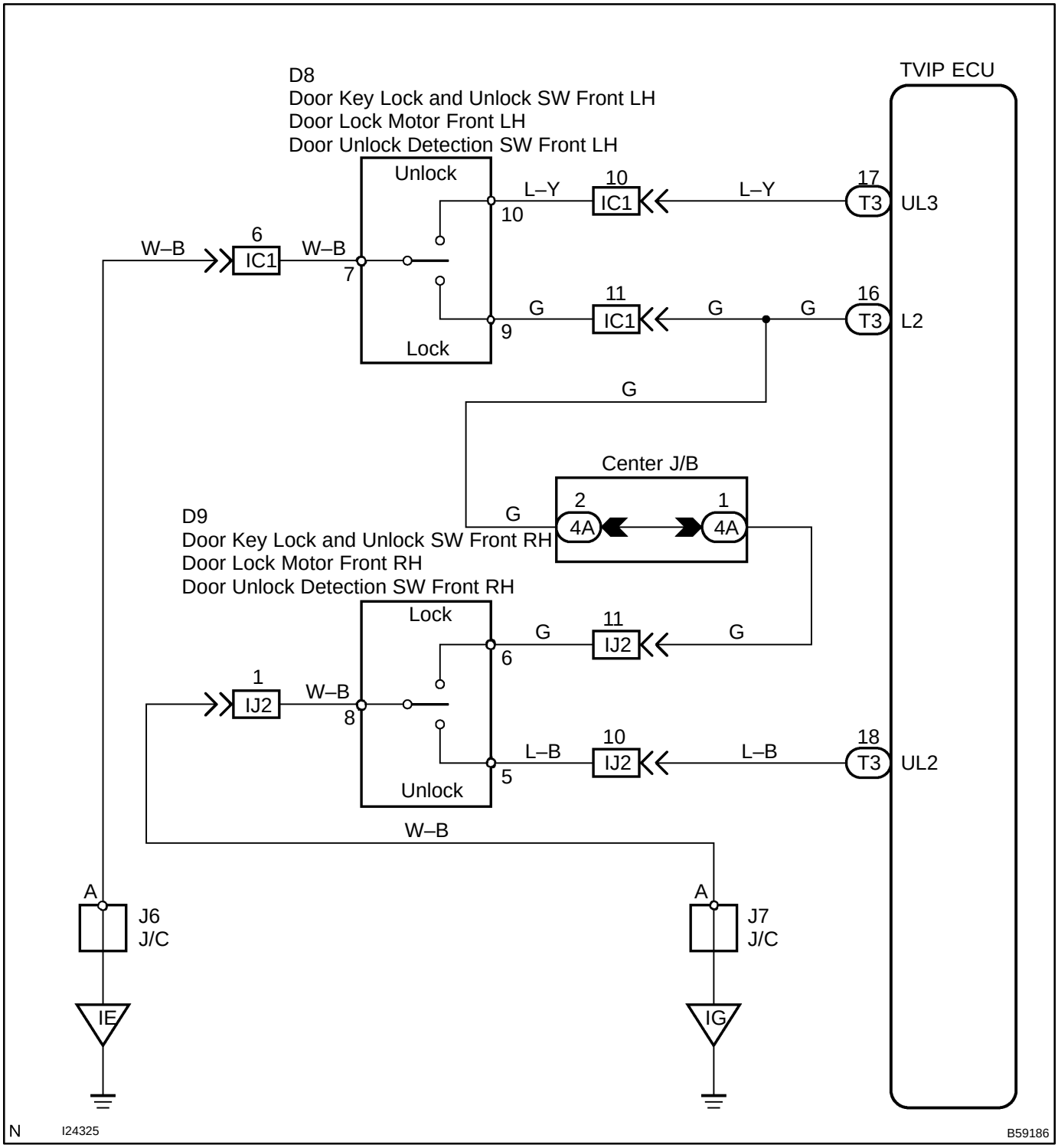

INSPECTION PROCEDURE

1	CHECK DOOR LOCK (See page 73–3)

NG → REPLACE DOOR LOCK

OK

2	CHECK WIRE HARNESS (TVIP ECU ⇔ DOOR LOCK)

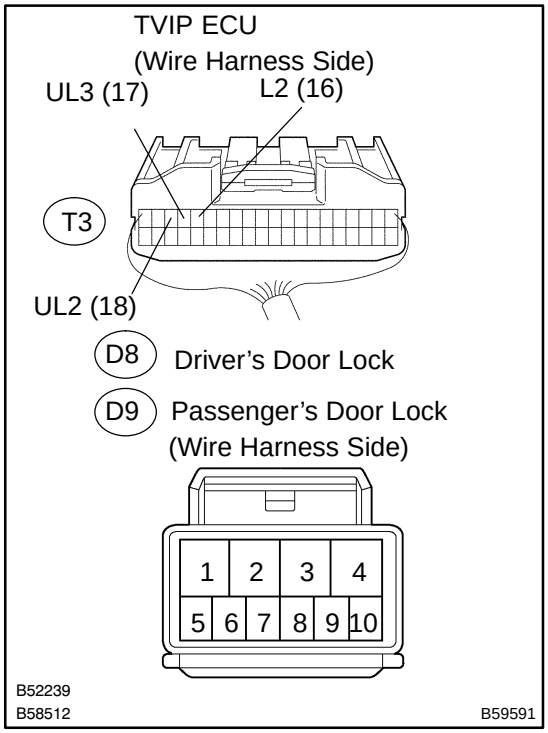

(a) Disconnect the TVIP ECU and door lock connectors.
(b) Check the continuity between the terminals of the TVIP ECU and door lock connectors, as shown in the illustration and table.

Standard:

Symbols (Terminal No.) (TVIP ECU ⇔ Door lock)	Specified condition
UL3 (T3–17) ⇔ D8–10	Continuity
L2 (T3–16) ⇔ D8–9	
L2 (T3–16) ⇔ D9–6	
UL2 (T3–18) ⇔ D9–5	

NG → REPAIR OR REPLACE WIRE HARNESS AND CONNECTOR

OK

3	CHECK WIRE HARNESS (DOOR LOCK ⇔ BODY GROUND)

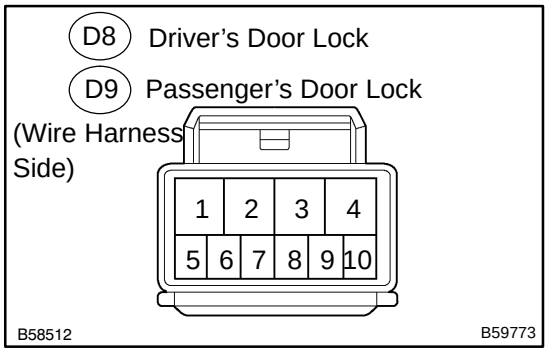

(a) Disconnect the door lock connector.
(b) Check the continuity between the terminal of the door lock connector and the body ground, as shown in the illustration and table.

Standard:

Symbols (Terminal No.) (Door lock ⇔ Body ground)	Specified condition
D9–8 ⇔ Body ground	Continuity
D8–7 ⇔ Body ground	

NG → REPAIR OR REPLACE WIRE HARNESS AND CONNECTOR

OK

PROCEED TO NEXT CIRCUIT INSPECTION SHOWN ON PROBLEM SYMPTOMS TABLE (See page 05–707)

DOOR UNLOCK DETECTION SWITCH CIRCUIT

CIRCUIT DESCRIPTION

The door unlock detection switch is built in the door lock motor assembly. This switch is ON when the door lock knob is in the unlock position and OFF when the knob is in the lock position. The ECU detects the door lock knob conditions in this circuit.

WIRING DIAGRAM

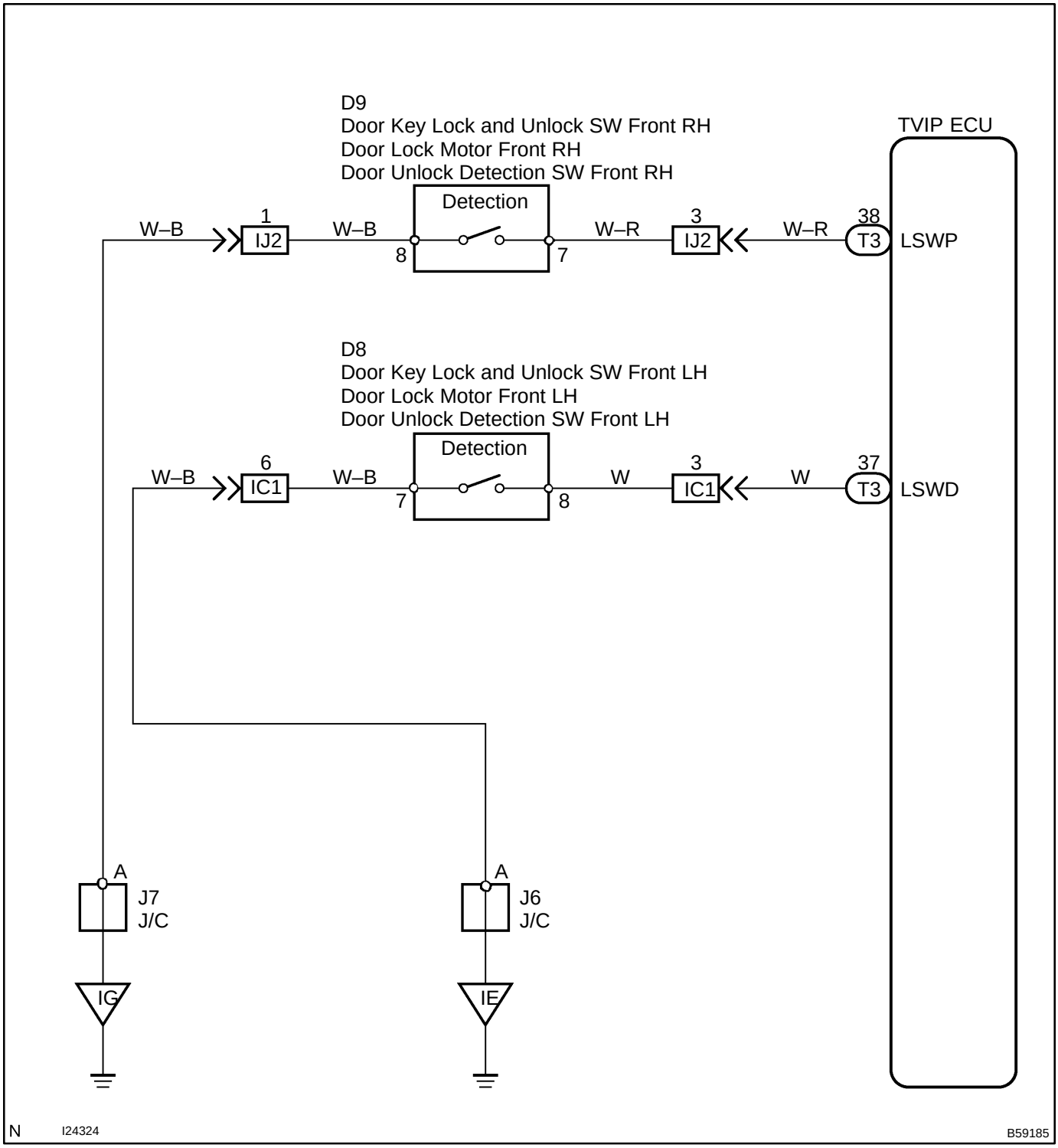

INSPECTION PROCEDURE

1	CHECK DOOR LOCK (See page 73–3)

NG → REPLACE DOOR LOCK

OK

2	CHECK WIRE HARNESS (TVIP ECU ⇔ DOOR LOCK)

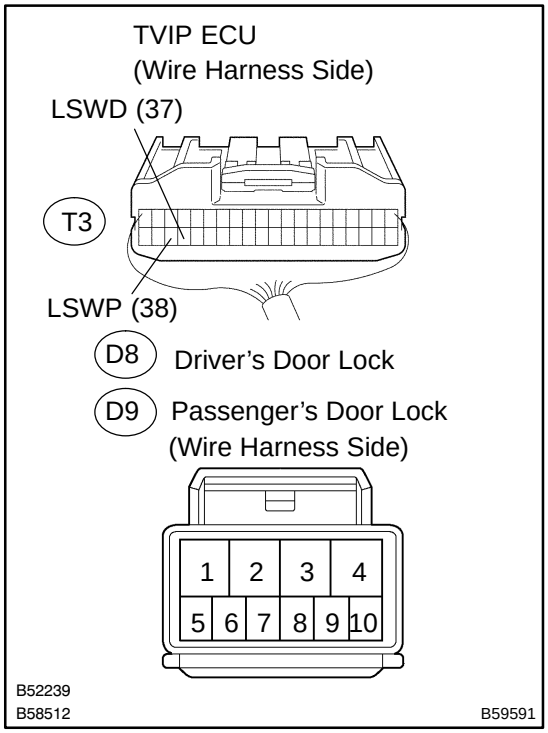

(a) Disconnect the TVIP ECU and door lock connectors.
(b) Check the continuity between the terminals of the TVIP ECU and door lock connectors, as shown in the illustration and table.

Standard:

Symbols (Terminal No.) (TVIP ECU ⇔ Door lock)	Specified condition
LSWD (T3–37) ⇔ D8–8	Continuity
LSWP (T3–38) ⇔ D9–7	Continuity

NG → REPAIR OR REPLACE WIRE HARNESS AND CONNECTOR

OK

3	CHECK WIRE HARNESS (DOOR LOCK ⇔ BODY GROUND)

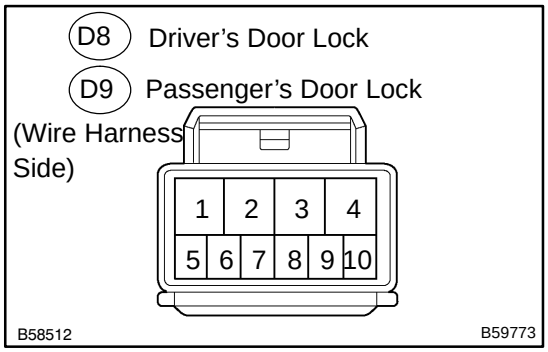

(a) Disconnect the door lock connector.
(b) Check the continuity between the terminal of the door lock connector and the body ground, as shown in the illustration and table.

Standard:

Terminal No. (Door lock ⇔ Body ground)	Specified condition
D9–8 ⇔ Body ground	Continuity
D8–7 ⇔ Body ground	

NG → REPAIR OR REPLACE WIRE HARNESS AND CONNECTOR

OK

PROCEED TO NEXT CIRCUIT INSPECTION SHOWN ON PROBLEM SYMPTOMS TABLE (See page 05–707)

ECU POWER SOURCE CIRCUIT

CIRCUIT DESCRIPTION

This circuit provides power to operate the TVIP ECU.

WIRING DIAGRAM

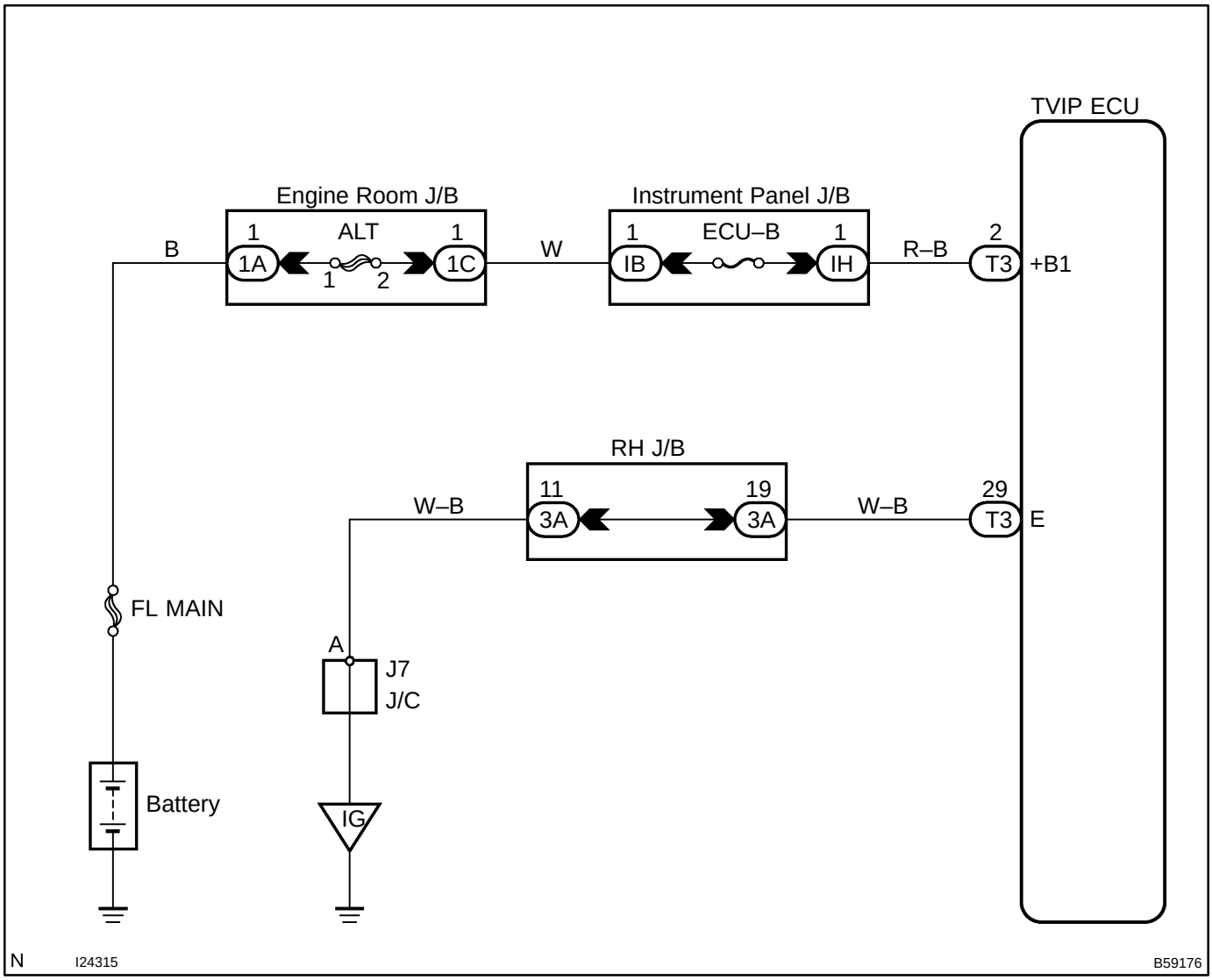

INSPECTION PROCEDURE

1 CHECK FUSE (ECU–B)

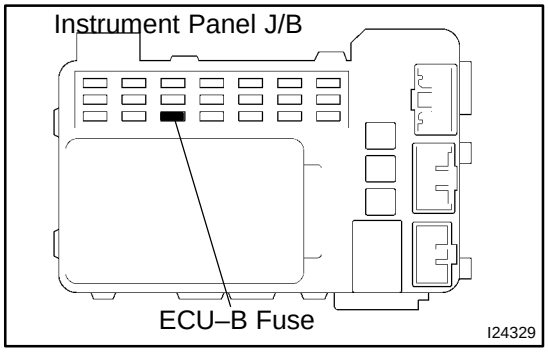

(a) Remove the fuse from the instrument panel J/B.
(b) Check the continuity of the fuse.
Standard: Continuity

NG → **REPLACE FUSE**

OK

2 CHECK TVIP ECU

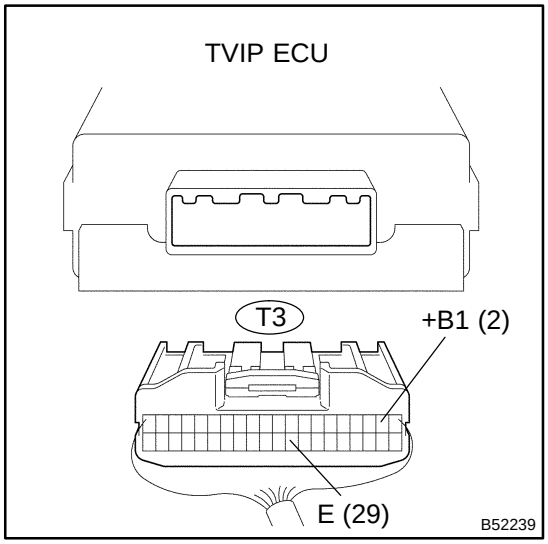

(a) Disconnect the TVIP ECU connector.
(b) Measure the voltage between the terminals of the ECU connector, as shown in the illustration and table.
Standard:

Symbols (Terminal No.)	Specified condition
+B1 (T3–2) ⇔ E (T3–29)	10 – 14 V
E (T3–29) ⇔ Body ground	0 V

NG → **PROCEED TO NEXT CIRCUIT INSPECTION SHOWN ON PROBLEM SYMPTOMS TABLE (See page 05–707)**

OK

3	CHECK WIRE HARNESS (TVIP ECU ⇔ BODY GROUND)

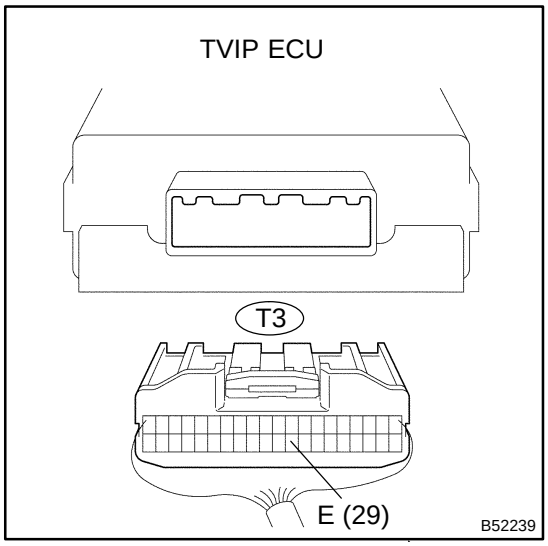

(a) Disconnect the TVIP ECU connector.

(b) Check the connector on the harness side, as shown in the illustration and table.

Standard:

Symbols (Terminal No.)	Specified condition
E (T3–29) ⇔ Body ground	Continuity

NG → **REPAIR OR REPLACE WIRE HARNESS AND CONNECTOR**

OK

CHECK AND REPLACE TVIP ECU (See page 01–30)

GLASS BREAKAGE SENSOR CIRCUIT

CIRCUIT DESCRIPTION

The microphone of the grass breakage sensor is built in the security indicator. When this microphone senses breakage of grass, the grass breakage sensor ECU sends the signal of this breakage to the TVIP ECU.

WIRING DIAGRAM

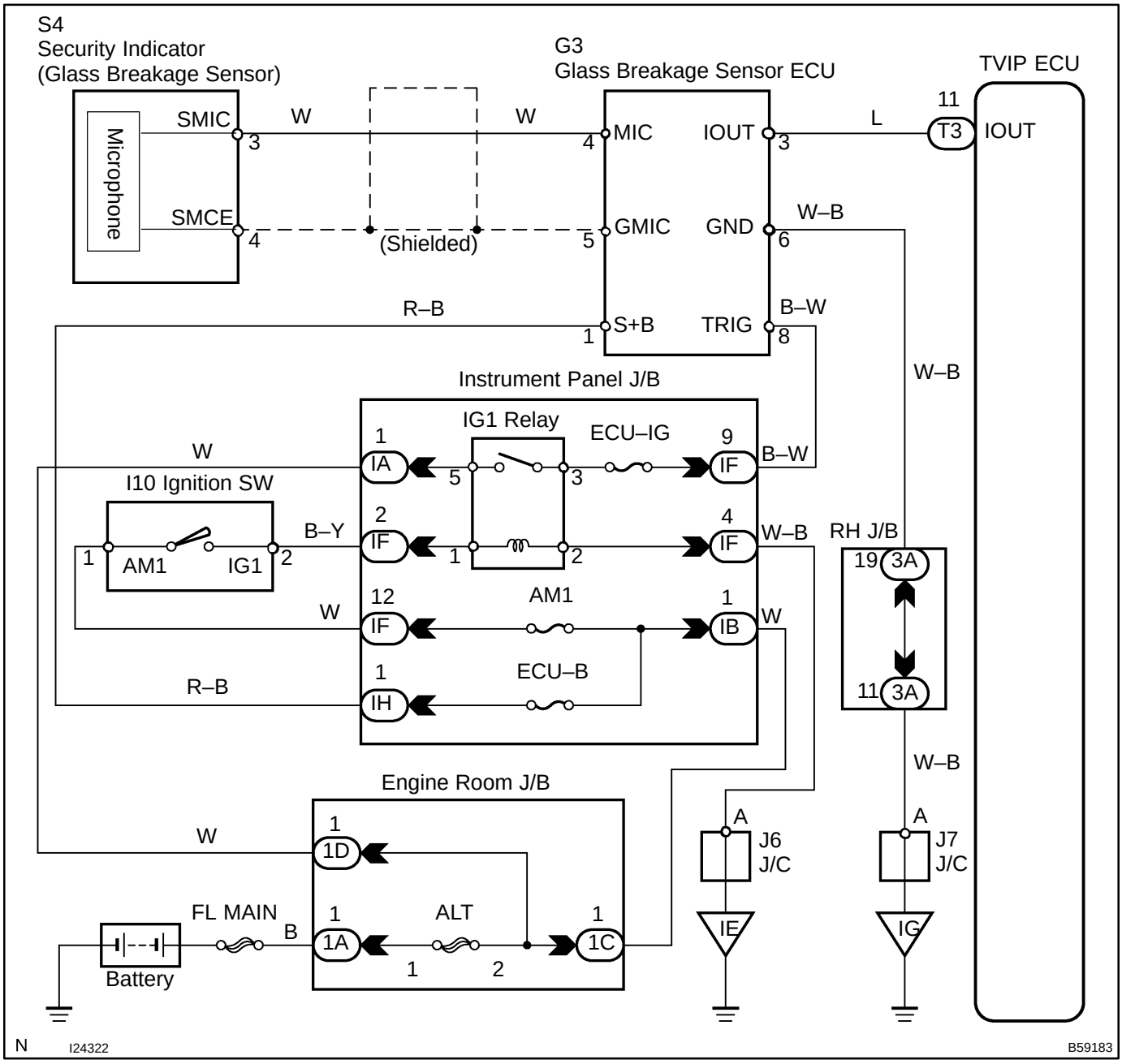

INSPECTION PROCEDURE

1	CHECK SECURITY INDICATOR LIGHT

(a) Set the system in 30 seconds after filliping the security indicator to check if the alarm is triggered.

OK → **NO PROBLEM**

NG

2	CHECK GLASS BREAKAGE SENSOR ECU (GLASS BREAKAGE SENSOR)

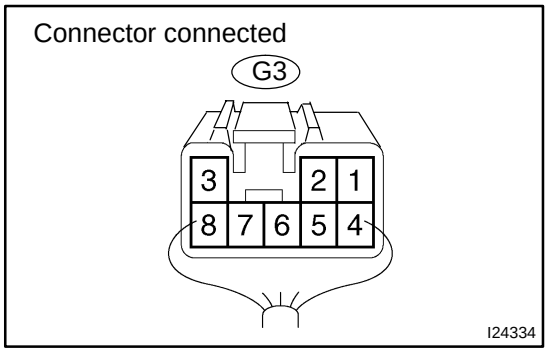

(a) Check the continuity and voltage of the glass breakage sensor ECU, as shown in the illustration and table.

Standard:

Terminal No.	Condition	Specified condition
G3–1 ⇔ Body ground	Constant	Battery voltage
G3–3 ⇔ Body ground	Constant	Pulse generation
G3–5 ⇔ Body ground	Constant	Continuity
G3–8 ⇔ Body ground	Ignition switch ON	Battery voltage

NG → **CHECK AND REPLACE GLASS BREAKAGE SENSOR ECU (See page 01–30)**

OK

3	CHECK WIRE HARNESS (TVIP ECU ⇔ GLASS BREAKAGE SENSOR ECU)

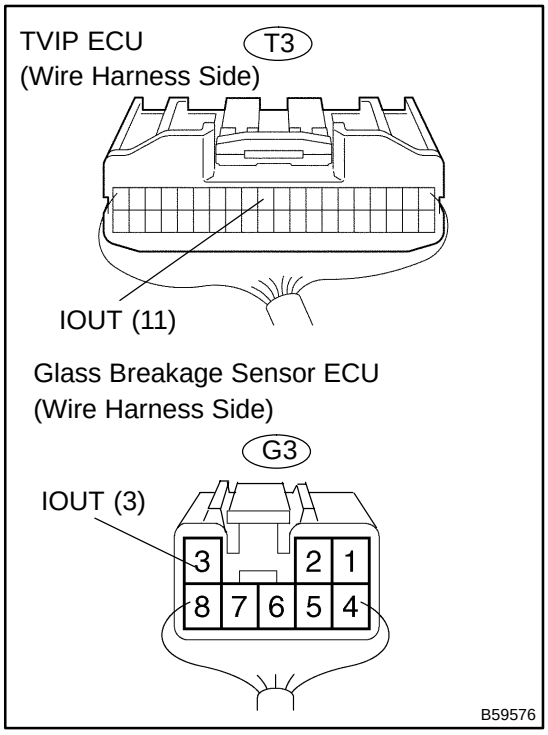

(a) Disconnect the TVIP ECU and glass breakage sensor ECU connectors.

(b) Check the continuity and between the connectors on the harness side, as shown in the illustration and table.

Standard:

Symbols (Terminal No.) (TVIP ECU ⇔ Sensor ECU)	Specified condition
IOUT (T3–11) ⇔ IOUT (G3–3)	Continuity

NG → **REPAIR OR REPLACE WIRE HARNESS AND CONNECTOR**

OK

4 CHECK WIRE HARNESS (GLASS BREAKAGE SENSOR ECU ⇔ BODY GROUND)

Glass Breakage Sensor ECU
(Wire Harness Side)

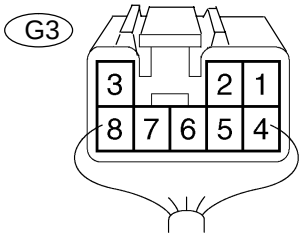

(a) Disconnect the glass breakage sensor ECU connector.
(b) Check the continuity between the terminal of the glass breakage sensor ECU connector and the body ground, as shown in the illustration and table.

Standard:

Symbols (Terminal No.) (Glass breakage sensor ⇔ Body ground)	Specified condition
GND (G3–6) ⇔ Body ground	Continuity

NG → **REPAIR OR REPLACE WIRE HARNESS AND CONNECTOR**

OK

CHECK AND REPLACE TVIP ECU (See page 01–30)

HAZARD WARNING SWITCH CIRCUIT

CIRCUIT DESCRIPTION

When the TVIP system is transferred to the alarm sounding state from the armed state, the signal flasher assembly (relay for hazard warning lights) will be switched ON and the hazard warning lights will start blinking.

WIRING DIAGRAM

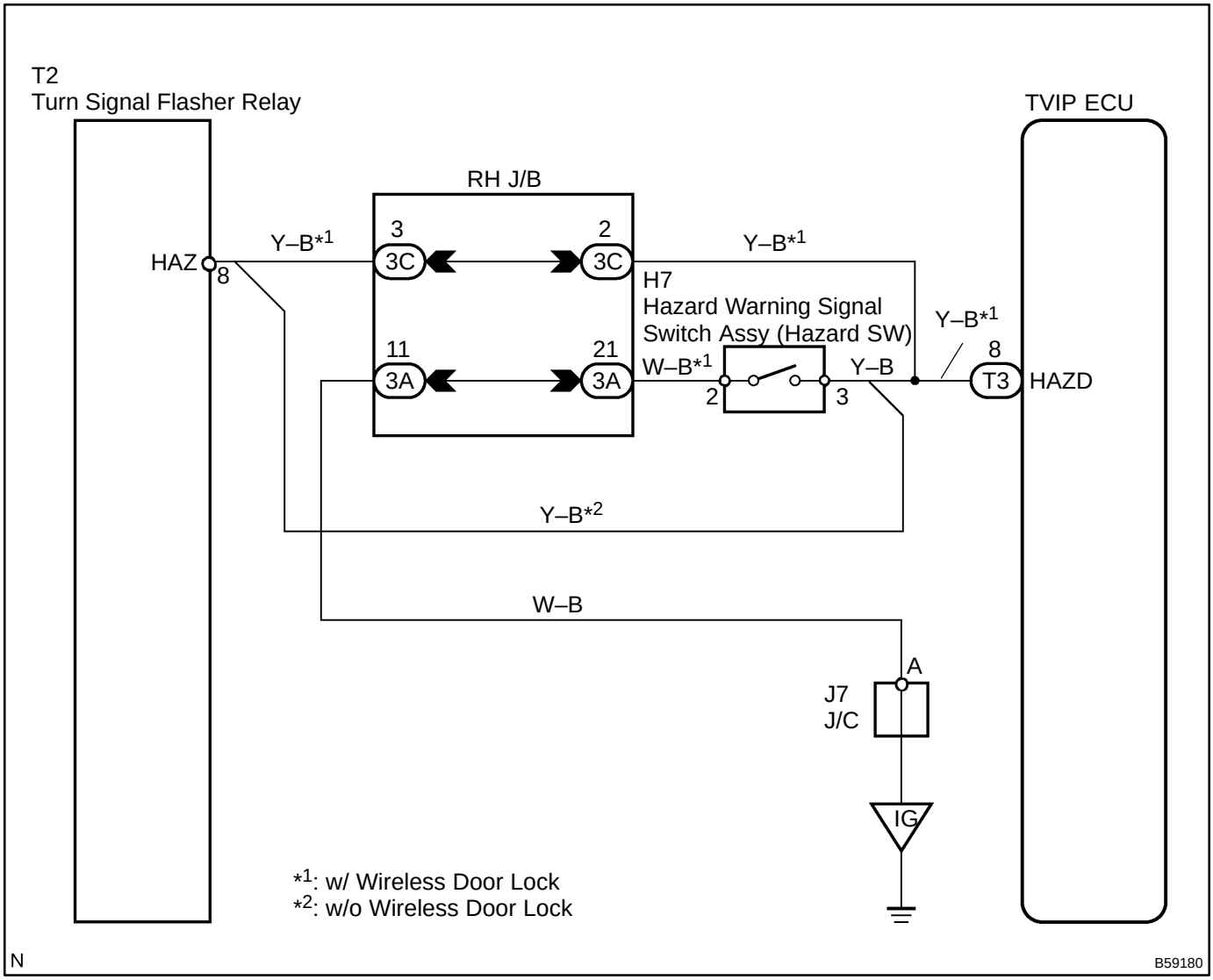

INSPECTION PROCEDURE

1 CHECK HAZARD WARNING SIGNAL SWITCH ASSY

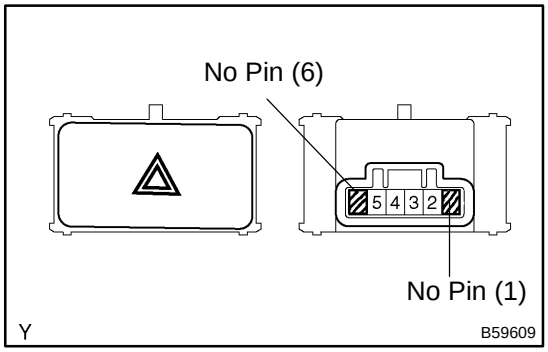

(a) Check the hazard warning switch continuity, as shown in the illustration and table.

Standard:

Terminal No.	Switch position	Specified condition
–	Switch OFF	Continuity
2 ⇔ 3	Switch ON	Continuity
4 ⇔ 5	Illumination circuit	Continuity

NG → **REPLACE HAZARD WARNING SIGNAL SWITCH ASSY**

OK

2 CHECK TURN SIGNAL FLASHER ASSY (See page 65–4)

NG → **REPLACE TURN SIGNAL FLASHER ASSY**

OK

3 CHECK WIRE HARNESS (TVIP ECU ⇔ TURN SIGNAL FLASHER)

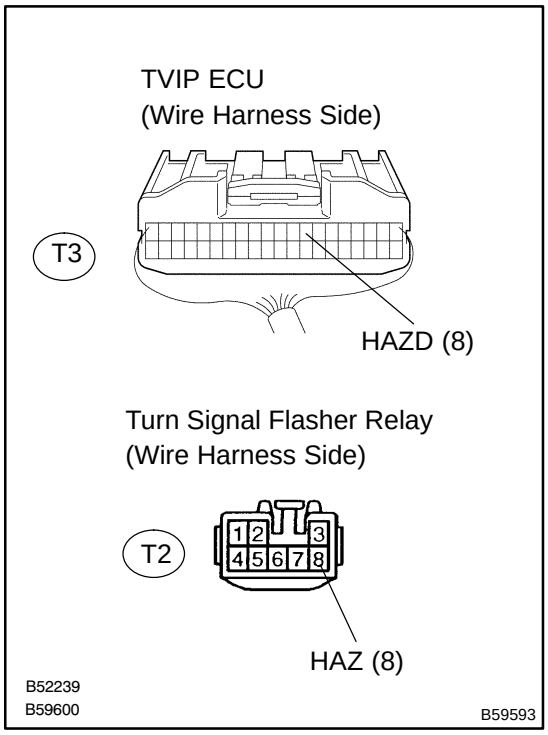

(a) Disconnect the TVIP ECU and turn signal flasher connectors.

(b) Check the continuity between the terminals of the TVIP ECU and turn signal flasher connectors, as shown in the illustration and table.

Standard:

Symbols (Terminal No.) (TVIP ECU ⇔ Turn Signal Flasher)	Specified condition
HAZD (T3–8) ⇔ HAZ (T2–8)	Continuity

NG → **REPAIR OR REPLACE WIRE HARNESS AND CONNECTOR**

OK

4	CHECK WIRE HARNESS (HAZARD WARNING SWITCH ⇔ BODY GROUND)

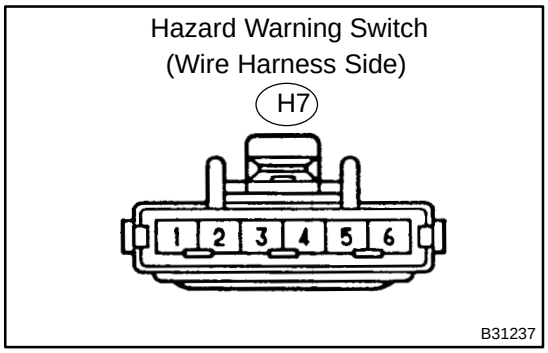

(a) Disconnect the hazard warning switch connector.
(b) Check the continuity between the terminal of the hazard warning switch connector and the body ground, as shown in the illustration and table.

Standard:

Symbols (Terminal No.) (Hazard warning SW ⇔ Body ground)	Specified condition
H7–2 ⇔ Body ground	Continuity

NG → **REPAIR OR REPLACE WIRE HARNESS AND CONNECTOR**

OK

CHECK AND REPLACE TVIP ECU (See page 01–30)

HORN RELAY CIRCUIT

CIRCUIT DESCRIPTION

When the TVIP system is transferred from the armed state to the alarm sounding state, the TVIP ECU switches on the HORN relay so that it can sound the horns. The horn sounds in 0.4 seconds interval.

WIRING DIAGRAM

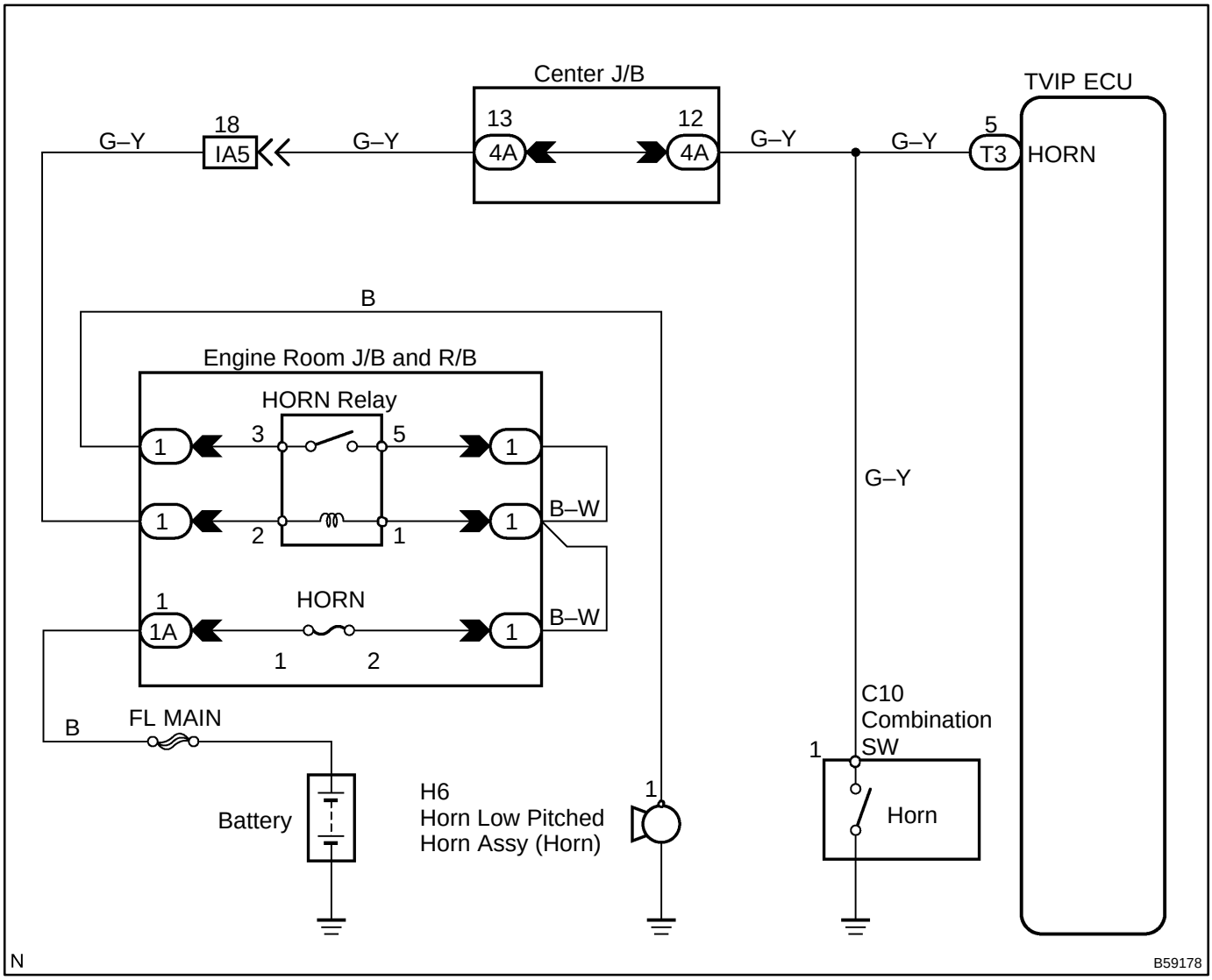

INSPECTION PROCEDURE

1	CHECK LOW PITCHED HORN ASSY

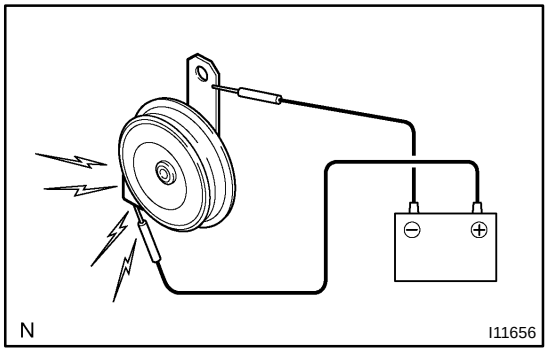

(a) Connect the positive (+) lead from the battery to the terminal and negative (–) lead to the horn body, and check that the horn blows.

NG → **REPAIR OR REPLACE LOW PITCHED HORN ASSY**

OK

2	CHECK RELAY (Marking: HORN)

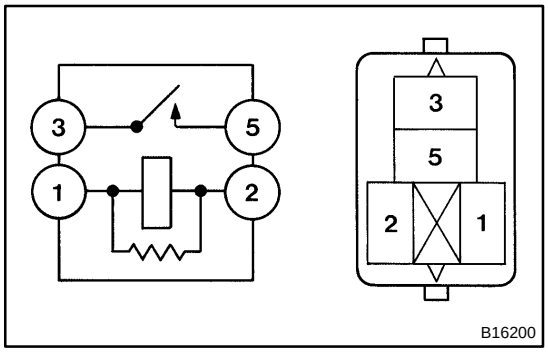

(a) Remove the relay from the engine room J/B.
(b) Check the horn relay continuity, as shown in the illustration and table.

Standard:

Terminal No.	Condition	Specified condition
1 ⇔ 2	Constant	Continuity
3 ⇔ 5	Apply B+ between terminals 1 and 2	Continuity

NG → **REPLACE RELAY**

OK

3 CHECK WIRE HARNESS (TVIP ECU ⇔ ENGINE ROOM J/B)

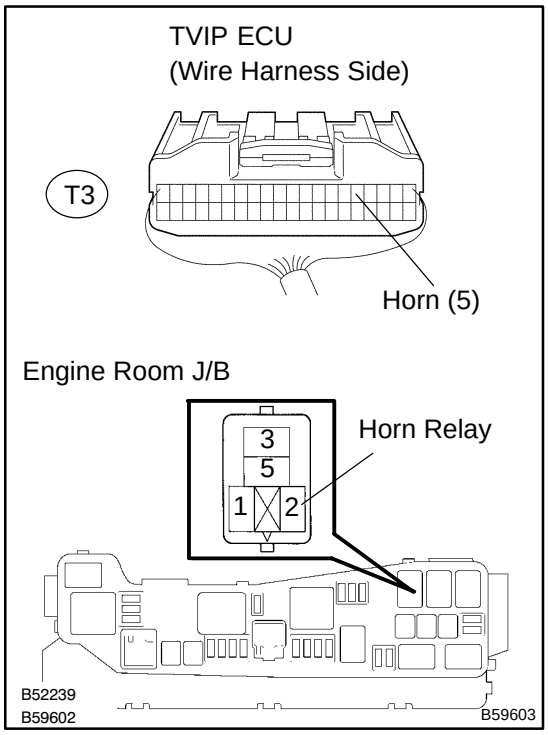

(a) Remove the horn relay from the engine room J/B.

(b) Check the continuity between the terminals of the TVIP ECU and engine room J/B connectors, as shown in the illustration and table.

Standard:

Symbols (Terminal No.) (TVIP ECU ⇔ Engine room J/B)	Specified condition
HORN (T3–5) ⇔ 2*	Continuity

*: Horn relay terminal.

NG → **REPAIR OR REPLACE WIRE HARNESS AND CONNECTOR**

OK

4 CHECK WIRE HARNESS (ENGINE ROOM J/B ⇔ HORN)

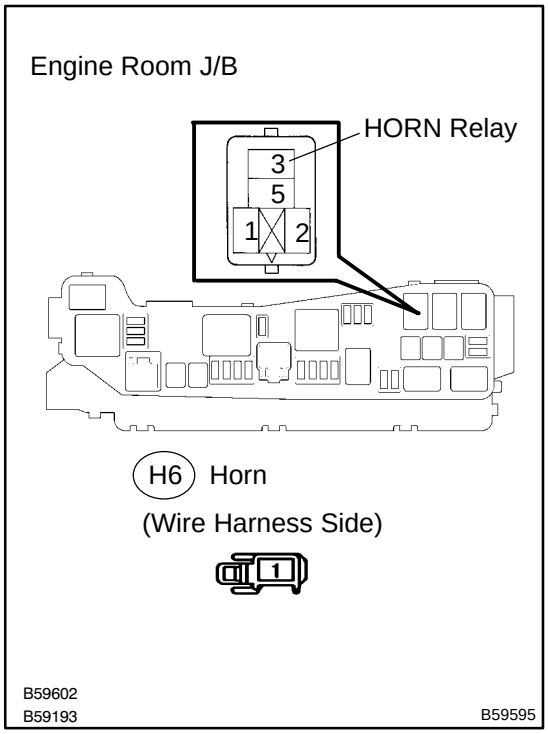

(a) Check the continuity between the terminals of the engine room J/B and horn connectors, as shown in the illustration and table.

Standard:

Symbols (Terminal No.) (Engine room J/B ⇔ Horn)	Specified condition
3* ⇔ Horn (H6–1)	Continuity

*: Horn relay terminal.

NG → **REPAIR OR REPLACE WIRE HARNESS AND CONNECTOR**

OK

CHECK AND REPLACE TVIP ECU (See page 01–30)

IGNITION SWITCH CIRCUIT

CIRCUIT DESCRIPTION

If the ignition switch is turned to the ON position, battery positive voltage is applied to the switches, such as terminal IG of the ECU.

WIRING DIAGRAM

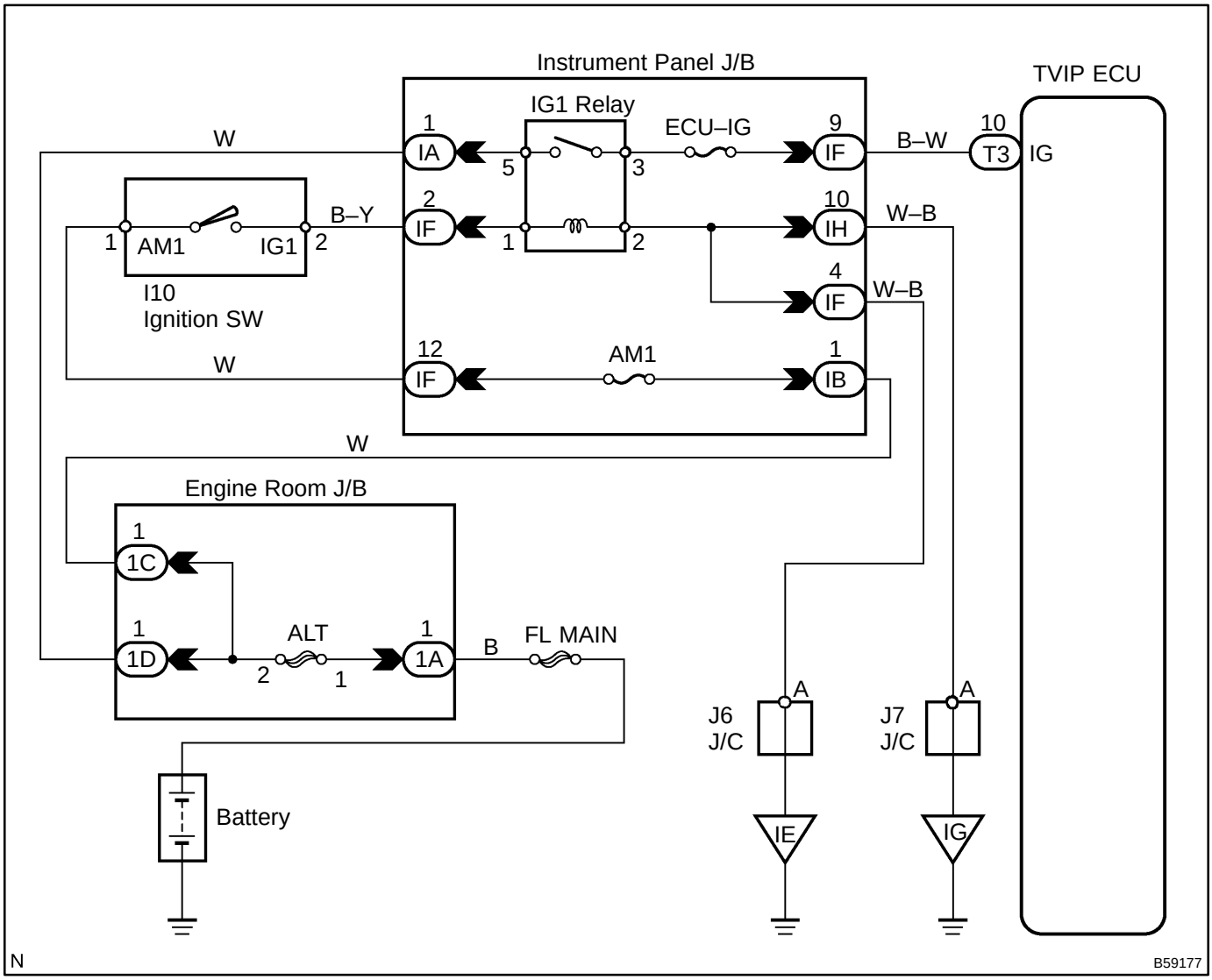

INSPECTION PROCEDURE

1 CHECK IGNITION OR STARTER SWITCH ASSY

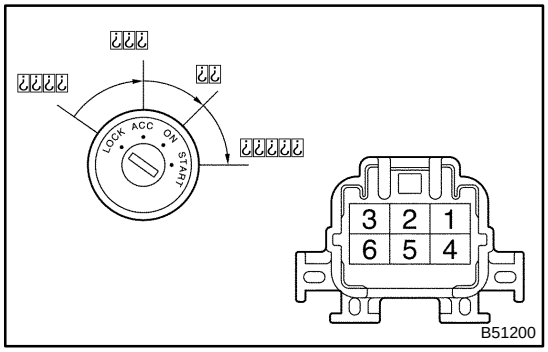

(a) Check the ignition switch, as shown in the illustration and table.

Standard:

Terminal No.	Switch position	Specified condition
–	LOCK	–
1 ⇔ 3	ACC	Continuity
1 ⇔ 2 ⇔ 3 5 ⇔ 6	ON	Continuity
1 ⇔ 2 4 ⇔ 5 ⇔ 6	START	Continuity

NG → **REPAIR OR REPLACE IGNITION OR STARTER SWITCH ASSY**

OK

2 CHECK FUSE (ECU–B)

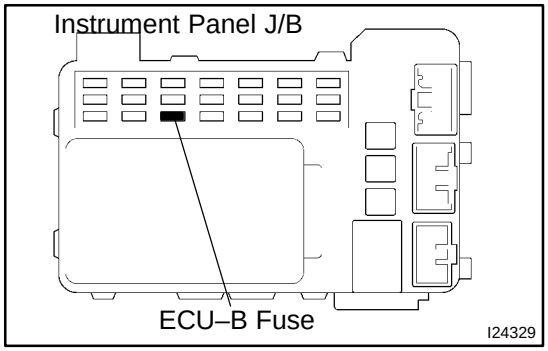

(a) Remove the fuse from the instrument panel J/B.
(b) Check the continuity of the fuse.

Standard: Continuity

NG → **REPLACE FUSE**

OK

3 CHECK RELAY (Marking: IG1)

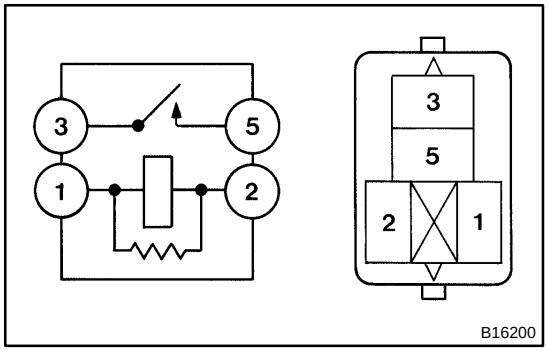

(a) Remove the relay from the instrument J/B.
(b) Inspect the relay continuity, as shown in the illustration and table.

Standard:

Terminal No.	Condition	Specified condition
1 ⇔ 2	Constant	Continuity
3 ⇔ 5	Apply B+ between terminals 1 and 2	Continuity

NG → **REPLACE RELAY**

OK

4 CHECK TVIP ECU

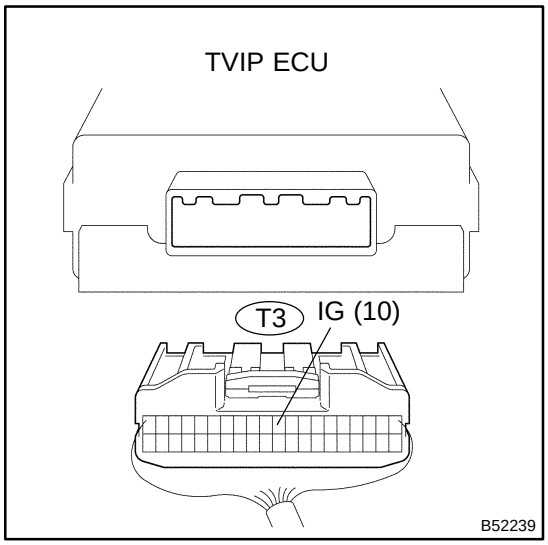

(a) Disconnect the TVIP ECU connector.
(b) Turn the ignition switch ON.
(c) Measure the voltage between the terminal of the ECU connector and the body ground, as shown in the illustration and table.

Standard:

Symbols (Terminal No.)	Specified condition
IG (T3–10) ⇔ Body ground	10 – 14 V

NG → **REPAIR OR REPLACE WIRE HARNESS AND CONNECTOR**

OK

CHECK AND REPLACE TVIP ECU (See page 01–30)

INDICATOR LIGHT CIRCUIT

CIRCUIT DESCRIPTION

When the TVIP system is preparing to be set, this circuit lights up the indicator light. When the system has been set, it continually turns the indicator light on for 0.2 seconds and turns it off for 1.8 seconds, thus the indicator light blinks.

WIRING DIAGRAM

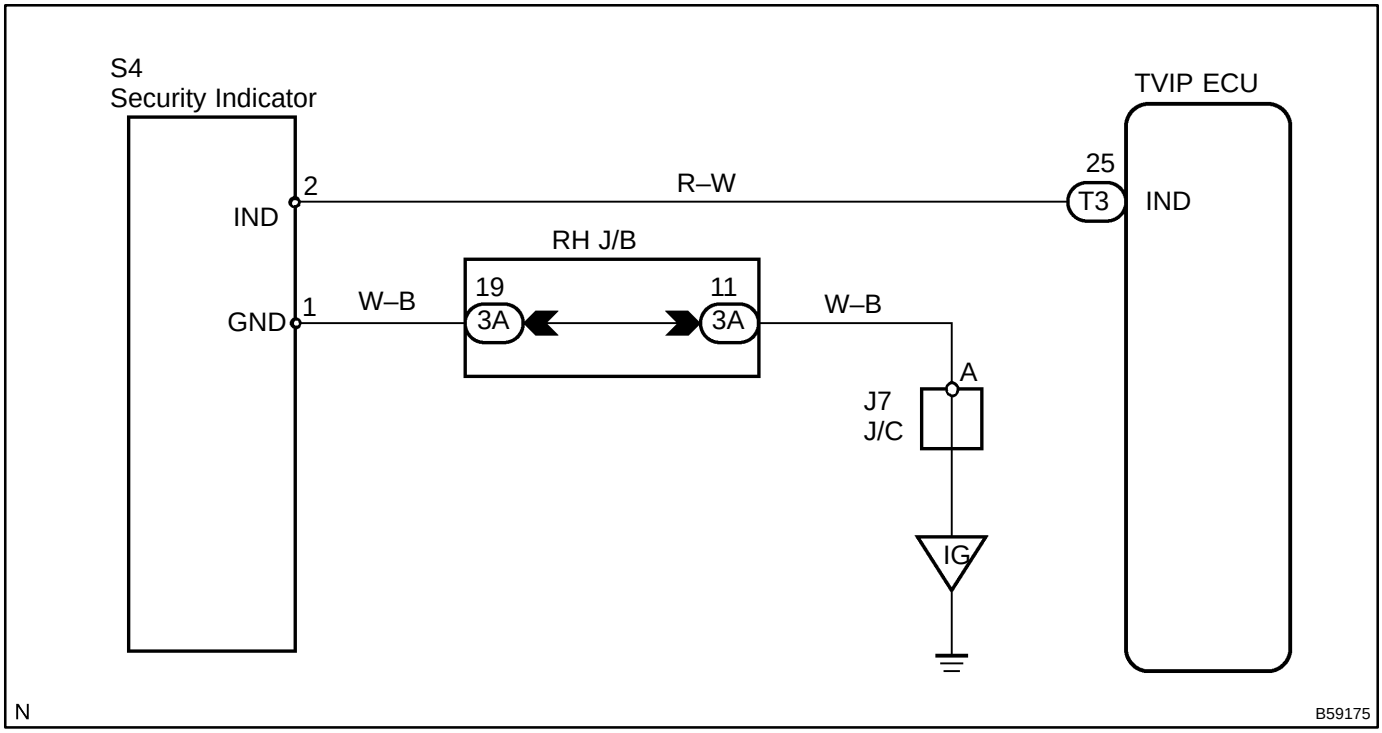

INSPECTION PROCEDURE

1	CHECK SECURITY INDICATOR LIGHT

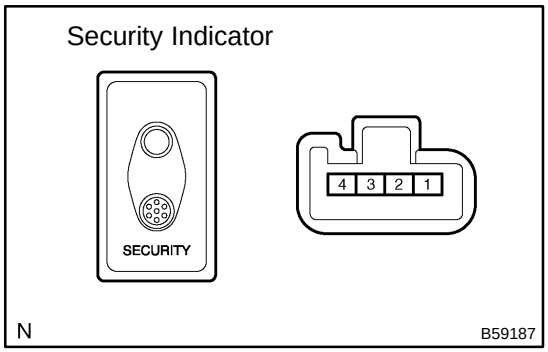

(a) Remove the security indicator.

(b) Check the indicator light, as shown in the illustration and table.

Standard:

Measuring condition	Operation
Battery positive (+) ⇔ Terminal 2 Battery negative (–) ⇔ Terminal 1	Indicator light comes on

NG → **REPLACE SECURITY INDICATOR LIGHT**

OK

2 CHECK WIRE HARNESS (TVIP ECU ⇔ SECURITY INDICATOR)

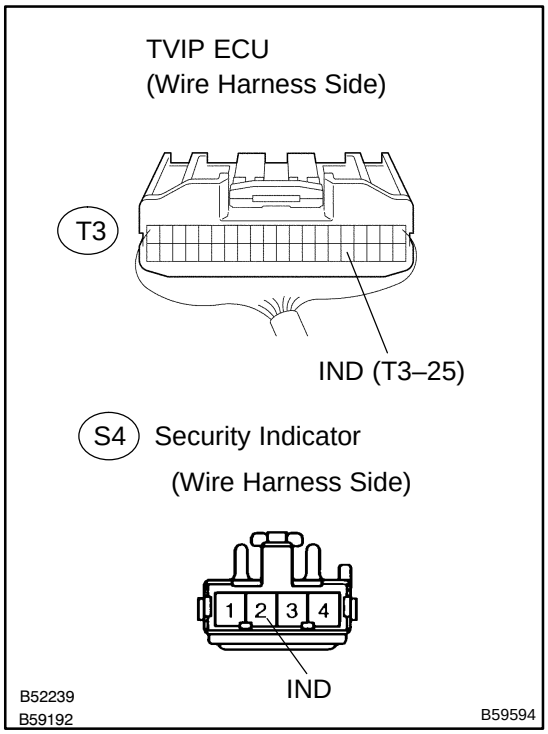

(a) Disconnect the TVIP ECU and security indicator connectors.

(b) Check the continuity between the terminals of the TVIP ECU connector and security indicator connector, as shown in the illustration and table.

Standard:

Symbols (Terminal No.) (TVIP ECU ⇔ Security indicator)	Specified condition
IND (T3–25) ⇔ IND (S4–2)	Continuity

NG → **REPAIR OR REPLACE WIRE HARNESS AND CONNECTOR**

OK

3 CHECK WIRE HARNESS (SECURITY INDICATOR ⇔ BODY GROUND)

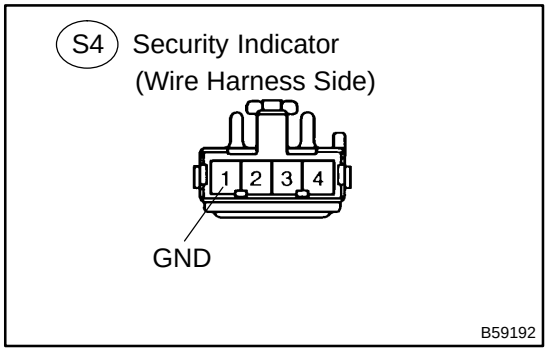

(a) Disconnect the security indicator connector.

(b) Check the continuity between the terminal of the security indicator connector and body ground, as shown in the illustration and table.

Standard:

Symbol (Terminal No.) (Security indicator ⇔ Body ground)	Specified condition
GND (S4–1) ⇔ Body ground	Continuity

NG → **REPAIR OR REPLACE WIRE HARNESS AND CONNECTOR**

OK

CHECK AND REPLACE TVIP ECU (See page 01–30)

KEY UNLOCK WARNING SWITCH CIRCUIT

CIRCUIT DESCRIPTION

The key unlock warning switch comes on when the ignition key is inserted in the key cylinder and goes off when the ignition key is removed.

WIRING DIAGRAM

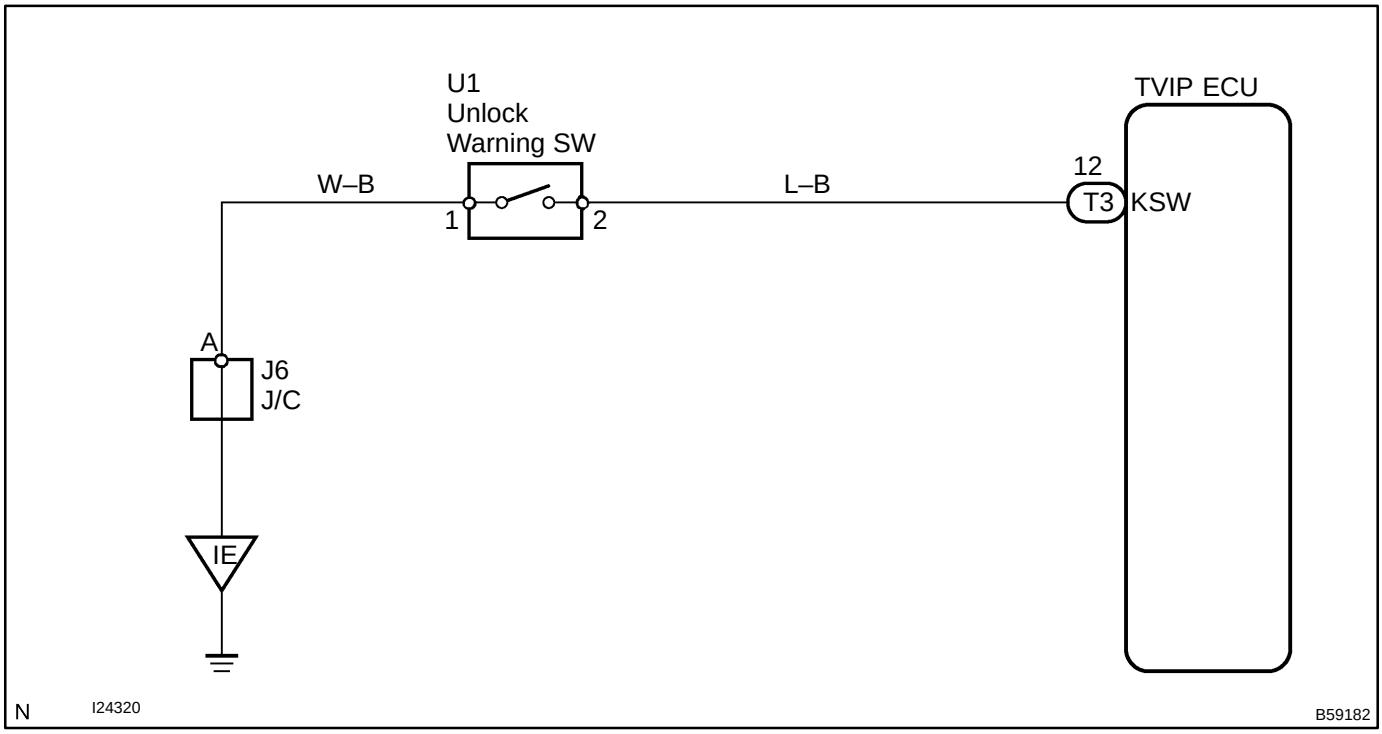

INSPECTION PROCEDURE

1 CHECK UN–LOCK WARNING SWITCH ASSY

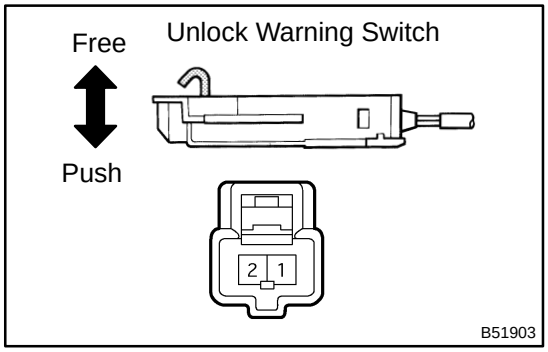

(a) Disconnect the key unlock warning switch connector.
(b) Check the continuity between the terminals of the key unlock warning switch connector, as shown in the illustration and table.

Standard:

Terminal No.	Switch position	Specified condition
1 ⇔ 2	Push (Key inserted)	Continuity
	Free (Key removed)	No continuity

NG → **REPLACE UN–LOCK WARNING SWITCH ASSY**

OK

2 CHECK WIRE HARNESS (TVIP ECU ⇔ UNLOCK WARNING SWITCH)

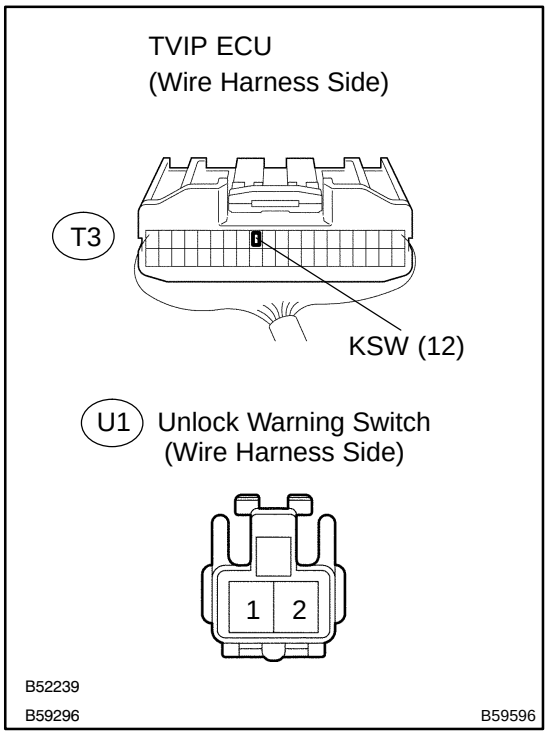

(a) Disconnect the TVIP ECU and key unlock warning switch connectors.
(b) Check the continuity between the terminals of the TVIP ECU connectors and unlock warning switch connector, as shown in the illustration and table.

Standard:

Symbols (Terminal No.) (TVIP ECU ⇔ Unlock warning switch)	Specified condition
KSW (T3–12) ⇔ U1–2	Continuity

NG → **REPAIR OR REPLACE WIRE HARNESS AND CONNECTOR**

OK

3 CHECK WIRE HARNESS (KEY UNLOCK WARNING SWITCH ⇔ BODY GROUND)

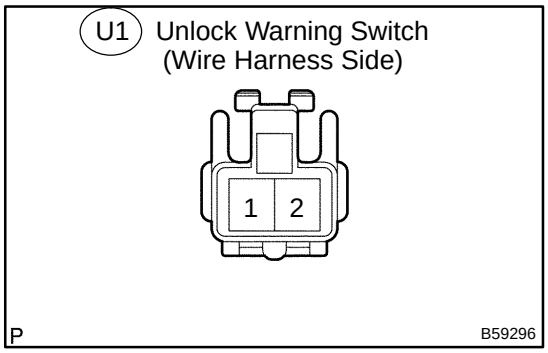

(a) Disconnect the key unlock warning switch connector.
(b) Check the continuity between the terminal of the key unlock warning switch connector and the body ground, as shown in the illustration and table.

Standard:

Terminal No. (Key unlock warning SW ⇔ Body ground)	Specified condition
U1–1 ⇔ Body ground	Continuity

NG → **REPAIR OR REPLACE WIRE HARNESS AND CONNECTOR**

OK

CHECK AND REPLACE TVIP ECU (See page 01–30)

LIGHT CONTROL SWITCH CIRCUIT

WIRING DIAGRAM

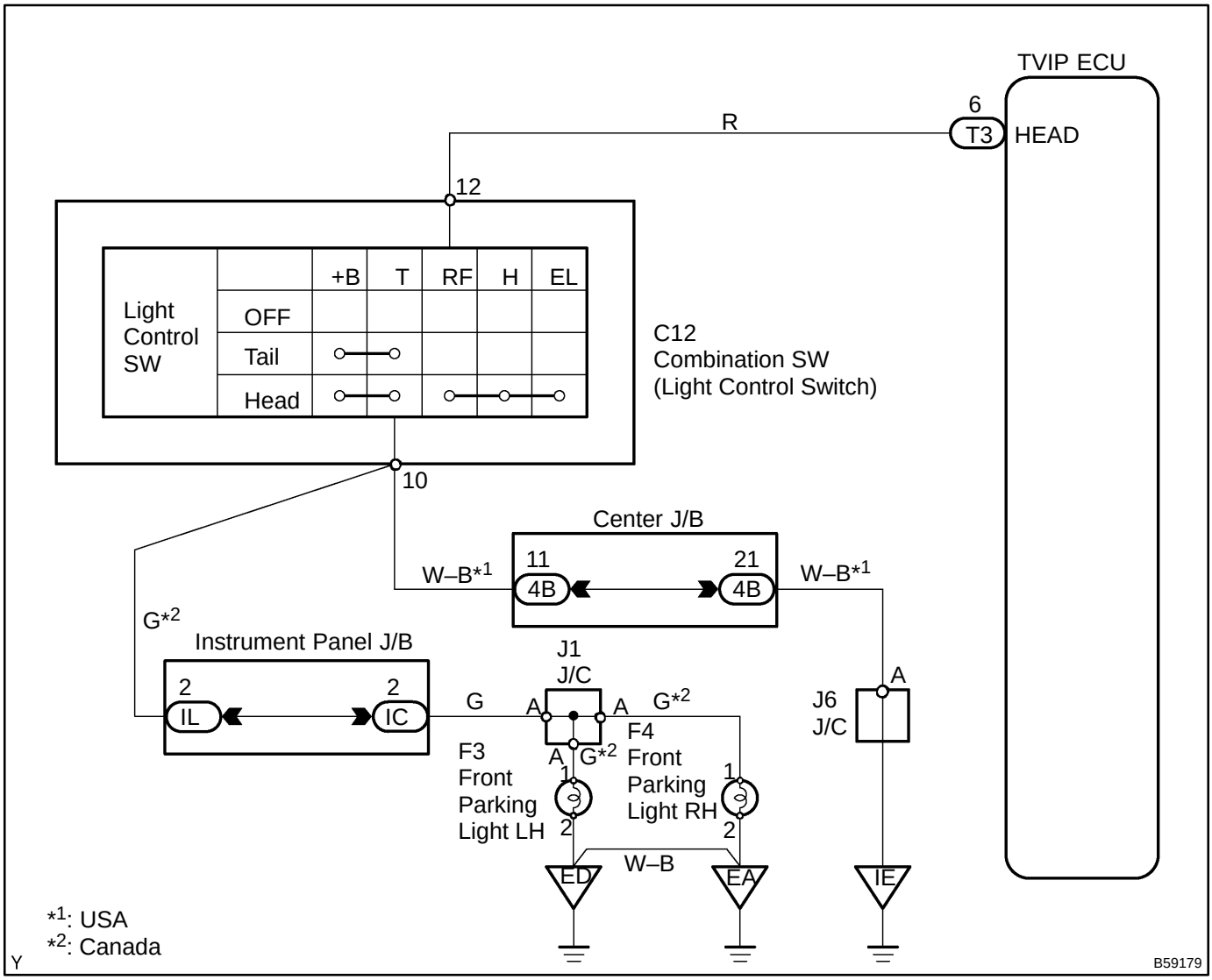

INSPECTION PROCEDURE

1	**CHECK HEADLAMP DIMMER SWITCH ASSY (LIGHT CONTROL SWITCH) (See page 65–7)**

NG → **REPLACE HEADLAMP DIMMER SWITCH ASSY (LIGHT CONTROL SWITCH)**

OK

2	**CHECK WIRE HARNESS (TVIP ECU ⇔ LIGHT CONTROL SWITCH)**

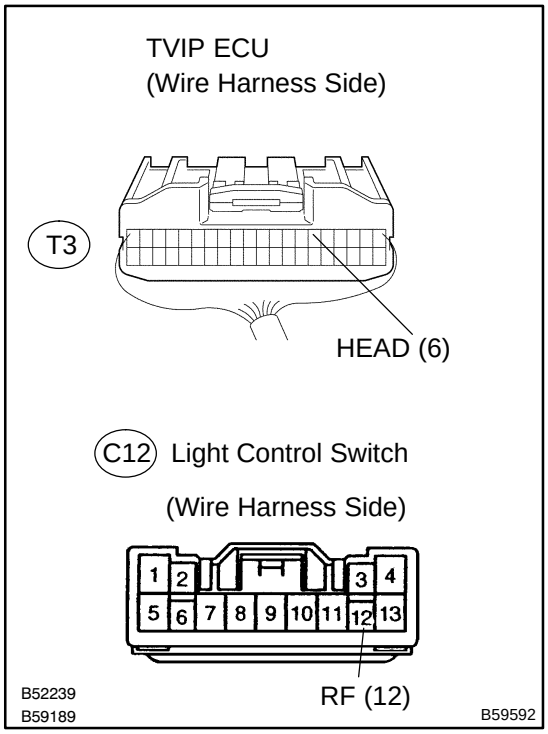

(a) Disconnect the TVIP ECU and light control switch connectors.

(b) Check the continuity between the terminals of the TVIP ECU and light control switch connectors, as shown in the illustration and table.

Standard:

Symbols (Terminal No.) (TVIP ECU ⇔ Light control switch)	Specified condition
HEAD (T3–6) ⇔ RF (C12–12)	Continuity

NG → **REPAIR OR REPLACE WIRE HARNESS AND CONNECTOR**

OK

3	CHECK WIRE HARNESS (LIGHT CONTROL SWITCH ⇔ BODY GROUND)

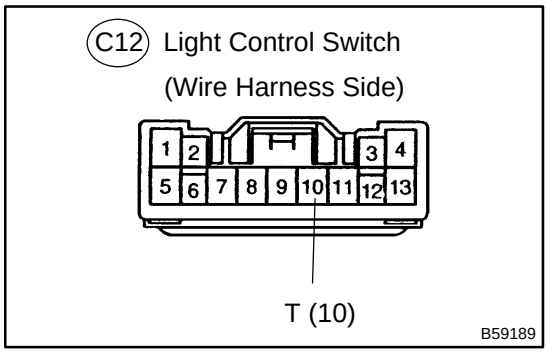

(a) Disconnect the light control switch connector.

(b) Check the continuity between the terminal of the light control switch connector and the body ground, as shown in the illustration and table.

Standard:

Symbols (Terminal No.) (Light control switch ⇔ Body ground)	Specified condition
T (C12–10) ⇔ Body ground	Continuity

NG → **REPAIR OR REPLACE WIRE HARNESS AND CONNECTOR**

OK

PROCEED TO NEXT CIRCUIT INSPECTION SHOWN ON PROBLEM SYMPTOMS TABLE
(See page 05–707)

057RV–01

LOCATION

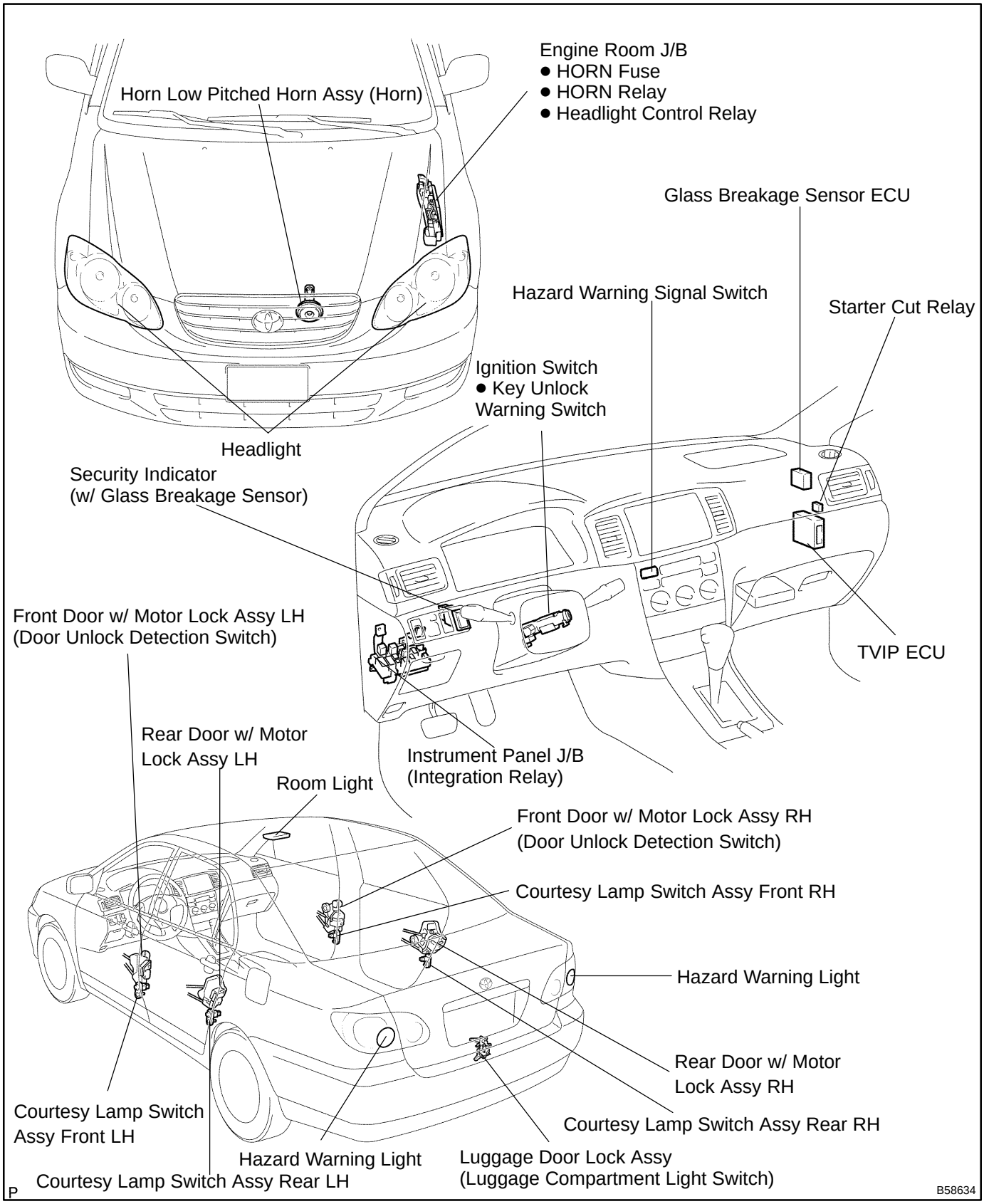

STARTER CUT RELAY CIRCUIT

CIRCUIT DESCRIPTION

When the TVIP system operates, the TVIP ECU controls the starter cut relay so that the relay should not be turned on and consequently the starter can not crank the engine.

WIRING DIAGRAM

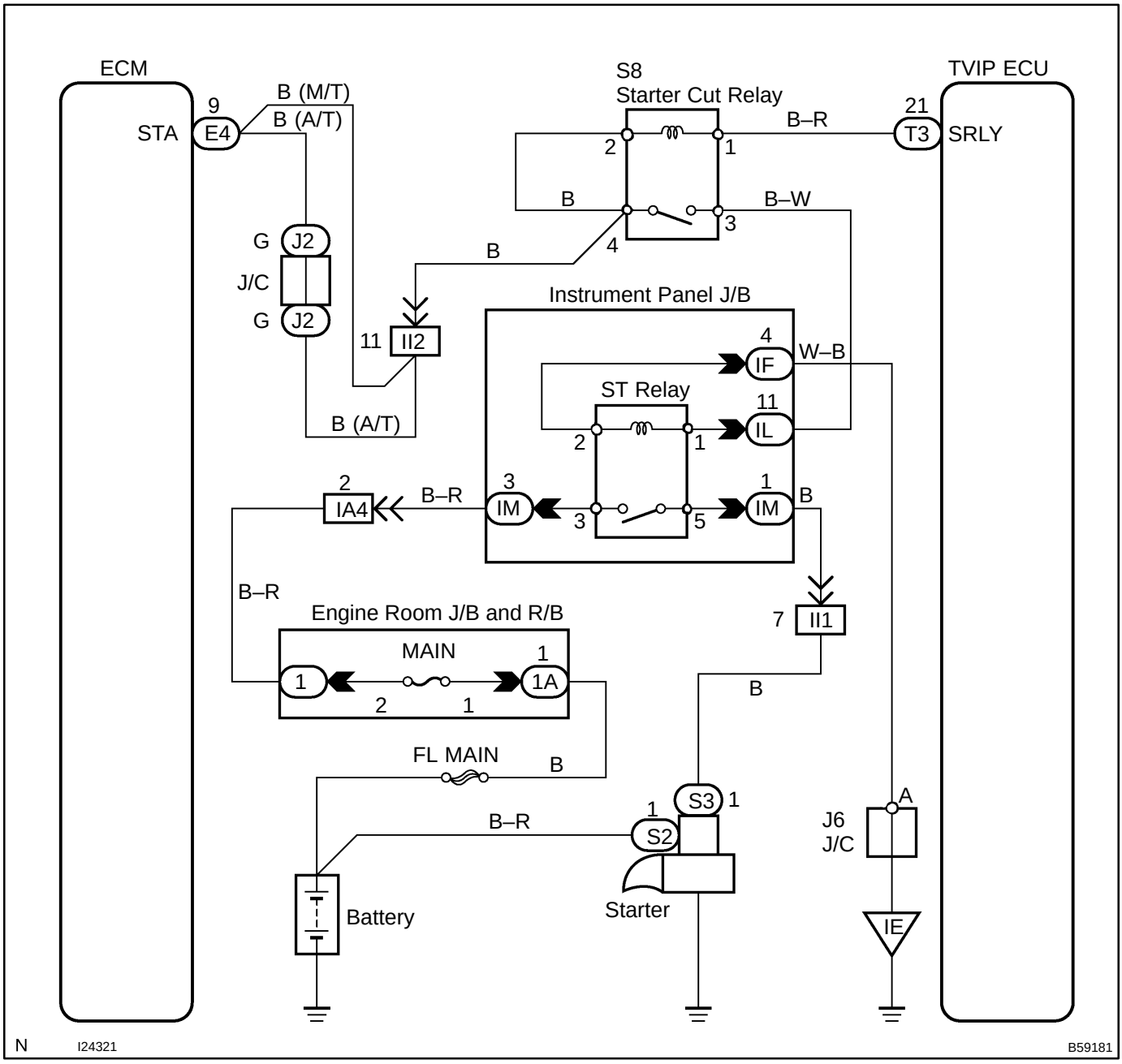

INSPECTION PROCEDURE

1 CHECK RELAY (Marking: STARTER CUT)

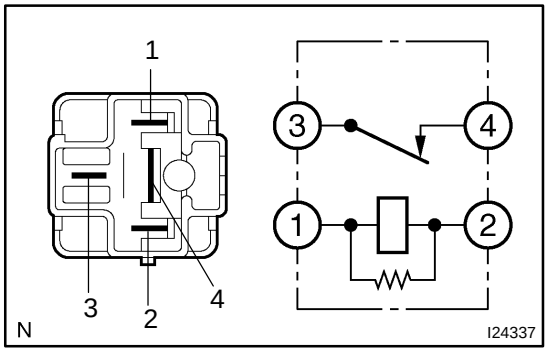

(a) Inspect the relay continuity, as shown in the illustration and table.

Standard:

Terminal No.	Condition	Specified condition
1 ⇔ 2	Constant	Continuity
3 ⇔ 4	Apply B+ between terminals 1 and 2	Continuity

NG → **REPLACE RELAY**

OK

2 CHECK TVIP ECU

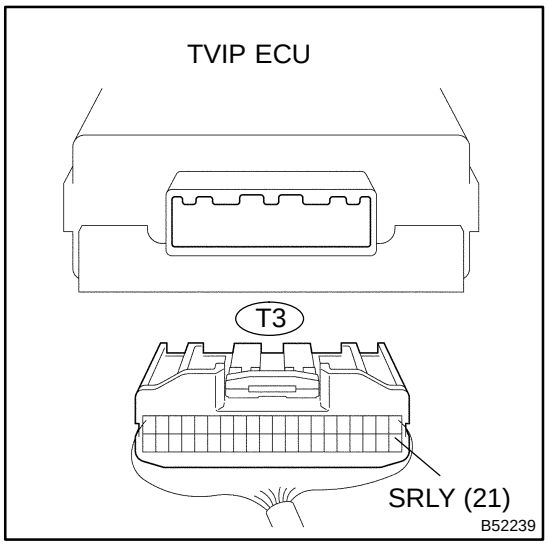

(a) Disconnect the TVIP ECU connector.
(b) Turn the ignition switch position to the START.
(c) Measure the voltage between the terminal of the ECU connector and the body ground, as shown in the illustration and table.

Standard:

Symbols (Terminal No.)	Specified condition
SRLY (T3–21) ⇔ Body ground	10 – 14 V

NG → **REPAIR OR REPLACE WIRE HARNESS AND CONNECTOR**

OK

CHECK AND REPLACE TVIP ECU (See page 01–30)

057RX–01

PROBLEM SYMPTOMS TABLE

Proceed to the reference page shown in the table below for each malfunction symptom and troubleshoot each circuit.

HINT:

Troubleshooting of the TVIP system is based on the premise that the door lock control system and wireless door lock control system is operating normally. Accordingly, before troubleshooting the TVIP system, first make certain that the door lock control system and wireless door lock control system is operating normally.

Symptom	Suspected Area	See page
TVIP system cannot be set	1. Indicator light circuit 2. ECU power source circuit 3. Key unlock warning switch circuit 4. Door key lock and unlock switch circuit 5. Door unlock detection switch circuit 6. Door courtesy switch circuit 7. TVIP ECU communication circuit	05–708 05–710 05–727 05–738 05–736 05–733 05–740
Indicator light does not blink when TVIP system is set.	1. Indicator light circuit	05–708
TVIP system does not operate when front door is unlocked (when TVIP system is set).	1. Door unlock detection switch circuit	05–736
TVIP system is not canceled when ignition key is turned to ON position (when TVIP system is set).	1. Ignition switch circuit 2. Key unlock warning switch circuit	05–713 05–727
TVIP system still operates when door is opened with key (when TVIP system is set).	1. Door key lock and unlock switch circuit 2. Door unlock detection switch circuit	05–738 05–736
Horns do not sound while TVIP system is in warning operation.	1. Horn relay circuit	05–716
Headlights do not flash while TVIP system is in warning operation.	1. Light control switch circuit	05–719
Hazard warning do not flash while TVIP system is in warning operation.	1. Hazard warning switch circuit	05–722
Door is not locked while TVIP system is in warning operation.	1. Door unlock detection switch circuit	05–736
TVIP system is still set even when rear door is open	1. Door courtesy switch circuit	05–733
Horns sound even when TVIP system is not set.	1. Horn relay circuit	05–716
Headlights stay on even when TVIP system is not set.	1. Light control switch circuit	05–719
Hazard warning stays on even when TVIP system is not set.	1. Hazard warning switch circuit	05–722

057RW–01

TERMINALS OF ECU

1. INSPECT TVIP ECU

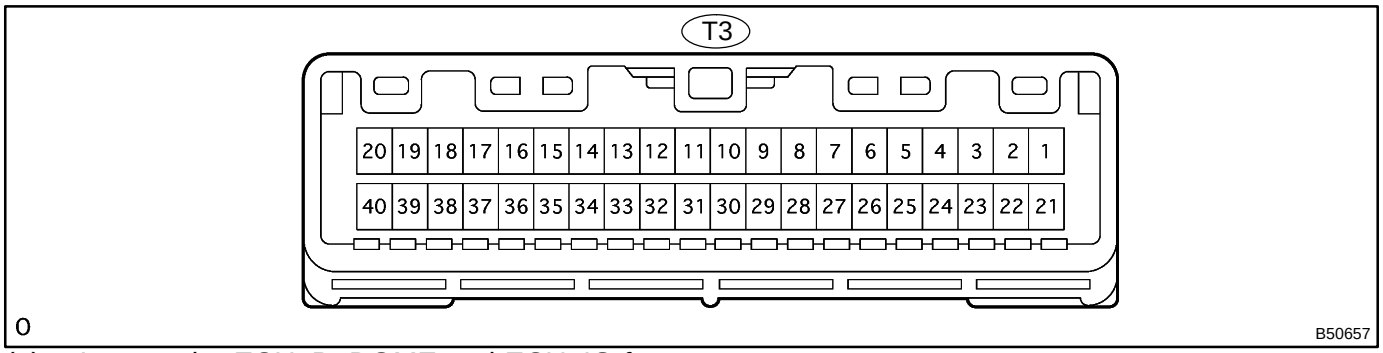

(a) Inspect the ECU–B, DOME and ECU–IG fuses.

(b) Disconnect the TVIP ECU connector, and the continuity and voltage of check each terminal of the disconnected connector.

Standard:

Symbols (Terminal No.)	Wiring Color	Condition	Specified Condition
+B1 (T3–2) ⇔ E (T3–29)	R–B ⇔ W–B	Constant	10 – 14 V
CTY (T3–19) ⇔ E (T3–29)	R ⇔ W–B	• Passenger's door fully closed → Opened • Rear right door fully closed → Opened • Rear left door fully closed → Opened	No continuity → Continuity
DSWD (T3–40) ⇔ E (T3–29)	R–W ⇔ W–B	Driver's door fully closed → Opened	No continuity → Continuity
DSWL (T3–35) ⇔ E (T3–29)	R–W ⇔ W–B	Luggage's door fully closed → Opened	No continuity → Continuity
KSW (T3–12) ⇔ E (T3–29)	L–B ⇔ W–B	No key in ignition switch lock cylinder → Key inserted	0 V → 10 – 14 V
L2 (T3–16) ⇔ E (T3–29)	G ⇔ W–B	Driver's door lock UNLOCK → LOCK	0 V → 10 – 14 V → 1 V or less
UL3 (T3–17) ⇔ E (T3–29)	L–Y⇔ W–B	Driver's door lock LOCK → UNLOCK	0 V → 10 – 14 V → 1 V or less
UL2 (T3–18) ⇔ E (T3–29)	L–B⇔ W–B	Passenger's door lock LOCK → UNLOCK	0 V → 10 – 14 V → 1 V or less
IRSG (T3–28) ⇔ E (T3–29)	W ⇔ W–B	Driver's door lock LOCK → UNLOCK	Pulse generation
IG (T3–10) ⇔ E (T3–29)	B–W ⇔ W–B	Ignition switch OFF → ON	0 V → 10 – 14 V
SRLY (T3–21) ⇔ E (T3–29)	B–R ⇔ W–B	Ignition switch OFF → ON	0 V → 10 – 14 V
LSWD (T3–37) ⇔ E (T3–29)	W ⇔ W–B	Driver's door lock UNLOCK → LOCK	0 V → 10 – 14 V
LSWP (T3–38) ⇔ E (T3–29)	W–R ⇔ W–B	Passenger's door lock UNLOCK → LOCK	0 V → 10 – 14 V

If the result is not as specified, the vehicle's side may malfunction.

(c) Reconnect the TVIP ECU connector, and the continuity and voltage of check each terminal of the disconnected connector.

Standard:

Symbols (Terminal No.)	Wiring Color	Condition	Specified Condition
DMLP (T3–9) ⇔ E (T3–29)	R–W ⇔ W–B	Armed state → Alarm sounding state	Pulse generation
HEAD (T3–6) ⇔ E (T3–29)	R ⇔ W–B	Light control switch position HEAD → OFF or TAIL	1 V or less → 10 – 14 V
HAZD (T3–8) ⇔ E (T3–29)	Y–B ⇔ W–B	Armed state → Alarm sounding state	Pulse generation
IND (T3–25) ⇔ E (T3–29)	R–W ⇔ W–B	Security indicator light lights up. (It lights up only for 30 sec.)	10 – 14 V
IOUT (T3–11) ⇔ E (T3–29)	L ⇔ W–B	Armed state → Alarm sounding state (on grass breakage detection)	Pulse generation
HORN (T3–5) ⇔ E (T3–29)	G–Y ⇔ W–B	Armed state → Alarm sounding state	Pulse generation
E (T3–29) ⇔ Body ground	W–B ⇔ Body ground	Constant	Continuity

If the result is not as specified, the TVIP ECU may malfunction.

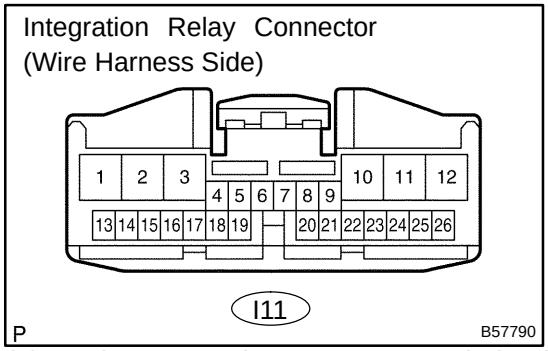

2. INSPECT INTEGRATION RELAY

(a) Disconnect the connector and check the continuity of each terminal of the disconnected connector.

Symbols (Terminal No.)	Wiring color	Condition	Specified Condition
PCTY (I11–13) ⇔ Body ground	R–W ⇔ Body ground	Passenger's door fully closed → Opened	No continuity → Continuity

If the result is not as specified, the vehicle's side may malfunction.

3. INSPECT INSTRUMENT PANEL J/B (INTEGRATION RELAY)

Instrument Panel J/B (Integration Relay)

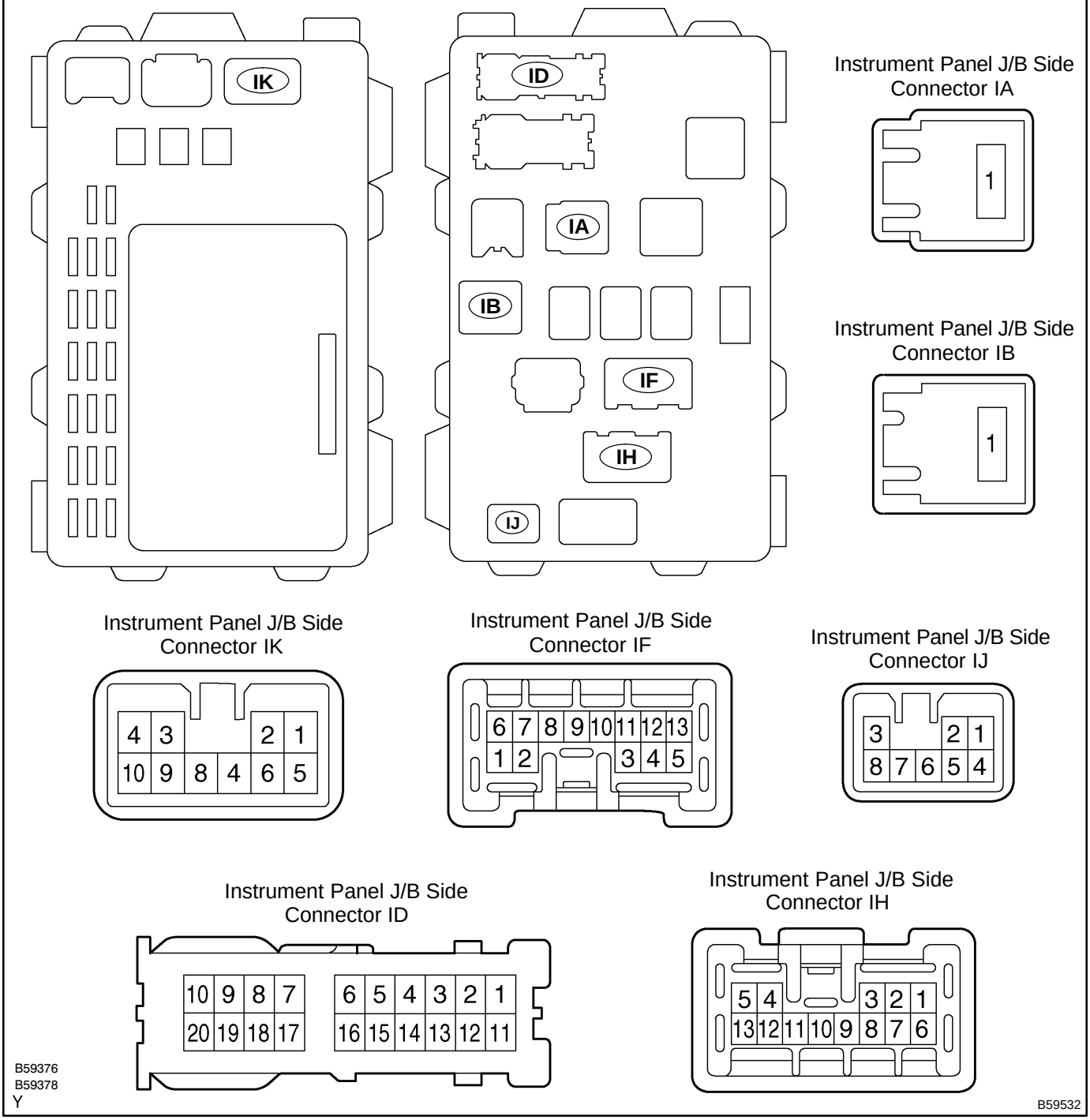

(a) Inspect the DOOR fuse.

(b) Disconnect the ID connector of the instrument panel J/B, and check the continuity of each terminal of the disconnected connectors.

Standard:

Symbols (Terminal No.)	Wiring color	Condition	Specified Condition
DCTY (ID–1) ⇔ Body ground	R–W ⇔ Body ground	Driver's door fully closed → Opened	No continuity → Continuity
PRCTY (ID–14) ⇔ Body ground	R–B ⇔ Body ground	Rear LH door fully closed → Opened	
PRCTY (ID–15) ⇔ Body ground	R–Y ⇔ Body ground	Rear RH door fully closed → Opened	

If the result is not as specified, the vehicle's side may malfunction.

TOYOTA VEHICLE INTRUSION PROTECTION SYSTEM

HOW TO PROCEED WITH TROUBLESHOOTING

057RT–01

Troubleshoot in accordance with the procedure on the following pages.

1	VEHICLE BROUGHT TO WORKSHOP

2	CUSTOMER PROBLEM ANALYSIS CHECK AND SYMPTOM CHECK (See page 05–701)

(a) Without applicable symptoms, proceed to ”A”.
(b) With applicable symptoms, proceed to ”B”.

B → Go to step 4

A

3	SYMPTOM SIMULATION

4	PROBLEM SYMPTOMS TABLE (See page 05–707)

(a) Without applicable symptoms, proceed to ”A”.
(b) With applicable symptoms, proceed to ”B”.

B → Go to step 5

A

5	CIRCUIT INSPECTION AND PART INSPECTION (See page 05–707)

6	PERFORM TROUBLESHOOTING IN THE FOLLOWING METHOD, DEPENDING ON MALFUNCTION SYMPTOM

(a) Terminals of ECU (Seepage 05–703)
(b) On–vehicle inspection (Seepage 73–14)

7	ADJUSTMENT, REPAIR OR REPLACEMENT

8	CONFIRMATION TEST

END

TVIP ECU COMMUNICATION CIRCUIT

CIRCUIT DESCRIPTION

The wireless receiver receives a SET/UNSET signal for the TVIP system and sends the signal to the TVIP ECU via the integration relay.

WIRING DIAGRAM

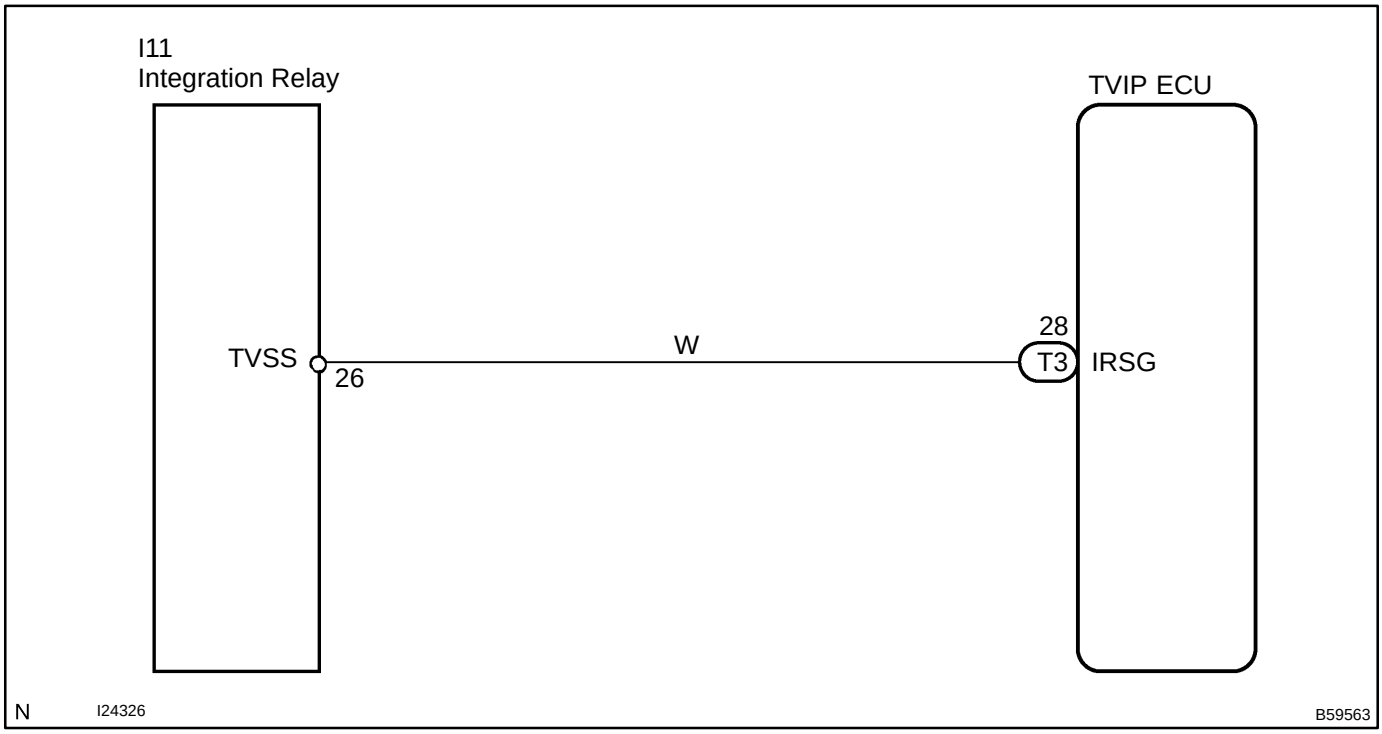

INSPECTION PROCEDURE

1	CHECK TVIP ECU

(a) Check that the operation of the TVIP function is normal.

HINT:

With this inspection, the TVIP ECU CPU can be diagnosed if it works normally or not.

NG → **CHECK AND REPLACE TVIP ECU (See page 01–30)**

OK

2 CHECK WIRE HARNESS (TVIP ECU ⇔ INTEGRATION RELAY)

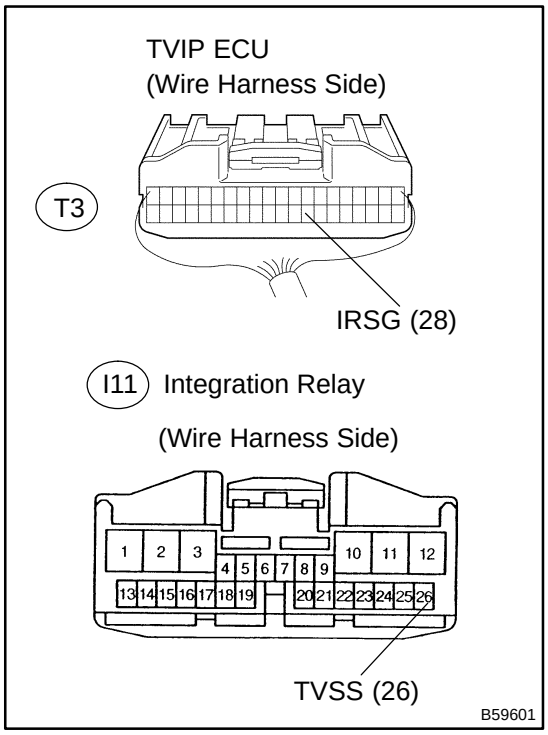

(a) Disconnect the TVIP ECU and integration relay connectors.

(b) Check the continuity between the terminal of the TVIP ECU connector and integration relay connectors, as shown in the illustration and table.

Standard:

Symbols (Terminal No.) (TVIP ECU ⇔ Integration relay)	Specified condition
IRSG (T3–28) ⇔ TVSS (I11–26)	Continuity

NG → **REPAIR OR REPLACE WIRE HARNESS AND CONNECTOR**

OK

CHECK AND REPLACE TVIP ECU (See page 01–30)

056B8–07

CUSTOMER PROBLEM ANALYSIS CHECK

WIRELESS DOOR LOCK CONTROL SYSTEM Check Sheet

Inspector's Name _____

Customer's Name		**VIN**	
		Production Date	/ /
		Licence No.	
Date Vehicle Brought in	/ /	**Odometer Reading**	km miles

Date Problem First Occurred		/ /
Frequency Problem Occurs		☐ Constant ☐ Sometimes (times/per day, month) ☐ Once only
Weather Conditions When Problem Occurred	**Weather**	☐ Fine ☐ Cloudy ☐ Rainy ☐ Snowy ☐ Various/Others
	Outdoor Temperature	☐ Hot ☐ Warm ☐ Cool ☐ Cold (Approx. ˚C (˚F))
	Place	☐ Everywhere ☐ Specific Locality ( )
Date Transmitter Battery Last Replaced		/ /

Problem Symptoms	☐ Whole wireless door lock control system does not operate.
	☐ Only door unlock function does not operate.
	☐ Only door lock function does not operate.
	☐ Doors are locked by wireless door lock operation even when doors are open.
	☐ Wireless door lock functions abnormally.
	☐ Others

056BB–04

LOCATION

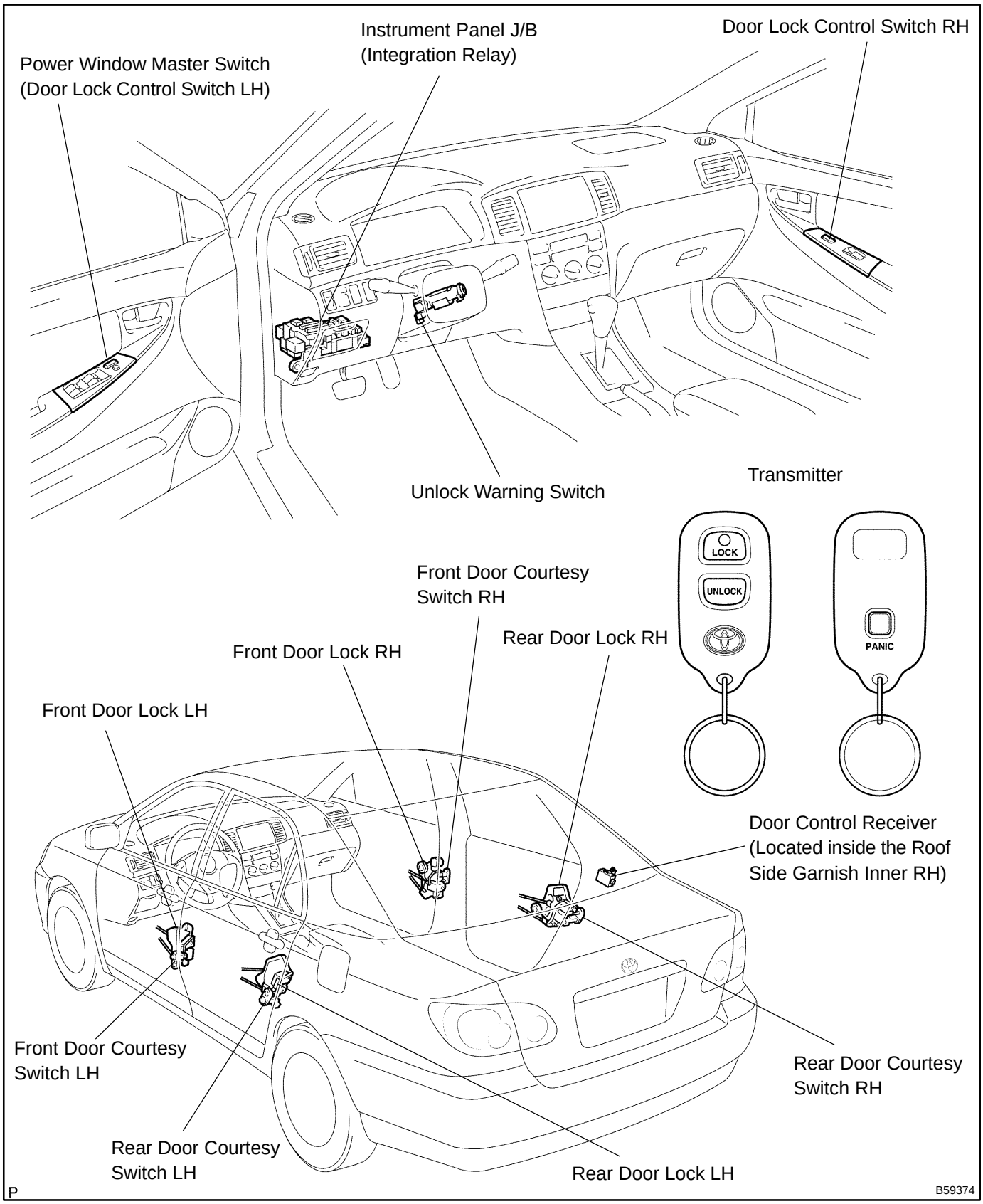

ONLY WIRELESS CONTROL FUNCTION DOES NOT OPERATE (PREPARE NEW OR NORMAL TRANSMITTER OF THE SAME TYPE VEHICLE)

CIRCUIT DESCRIPTION

The door control receiver receives a signal from the transmitter and sends this signal to the integration relay. Then, the integration relay controls door operation by sending a door LOCK/UNLOCK signal to each door lock motor.

WIRING DIAGRAM

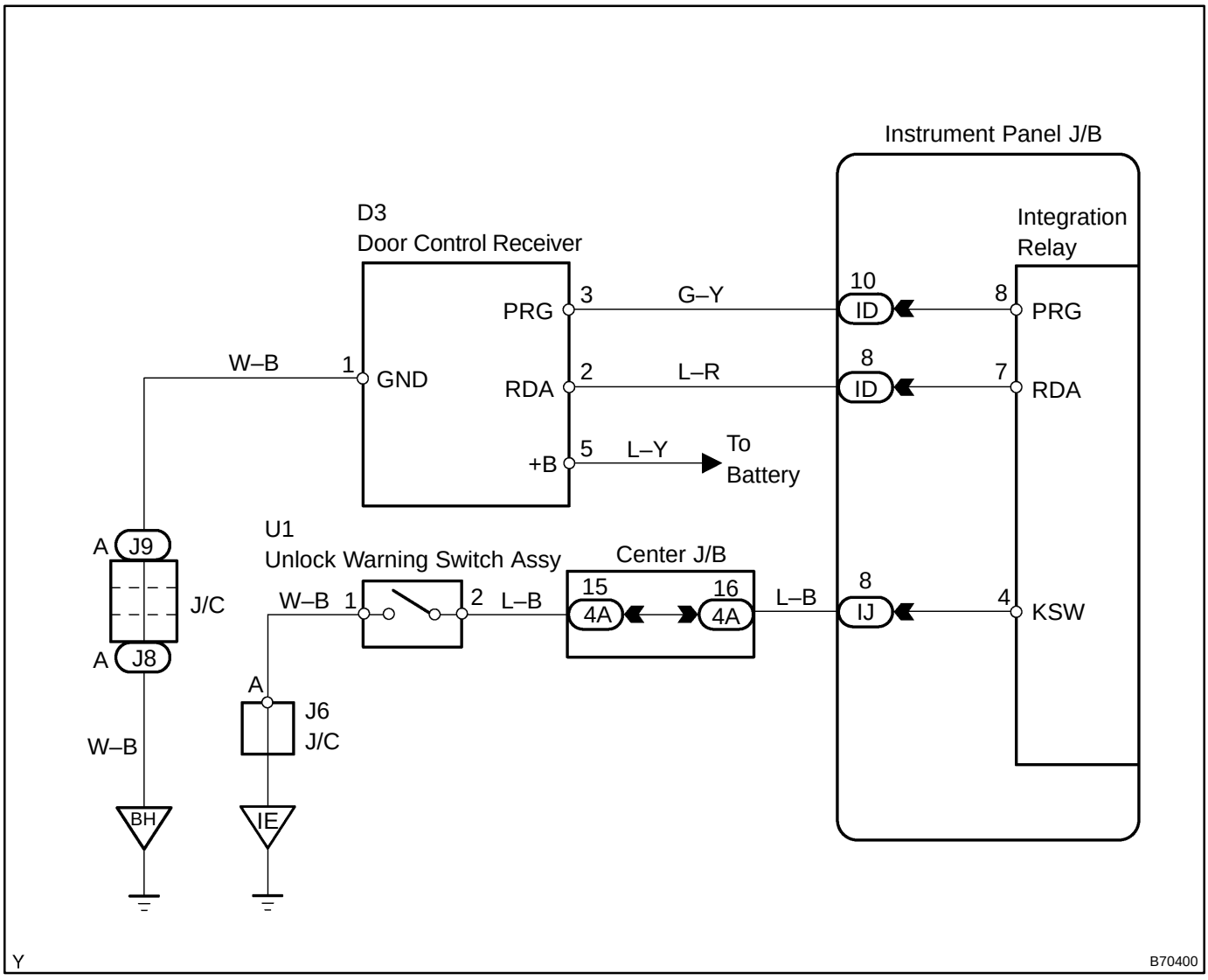

INSPECTION PROCEDURE

HINT:

The switch described in this text is a switch for transmitting signals which is built in the door control transmitter.

1	CHECK WIRELESS DOOR LOCK CONTROL FUNCTIONS (See page 73–8)

NG → Go to step 2

OK

NORMAL

2	REPLACE TRANSMITTER BATTERY WITH NORMAL ONE

(a) After replacing the transmitter battery with a new or normal one, check that the doors can lock and unlock by using the transmitter LOCK/UNLOCK switch.

NG → Go to step 3

OK

REPLACE TRANSMITTER BATTERY

3	CHECK WIRELESS DOOR LOCK CONTROL FUNCTIONS

(a) Check if UNLOCK–LOCK operates in standard operation.

NOTICE:

Standardized test procedure: Press the transmitter switch for 1 second, directing the beam to driver side door outside handle from a distance of 1 m (39.4 in.). The transmitter should be pointed directly at the door handle, i.e at 90° angle to the vehicle body.

NG → REPLACE DOOR CONTROL TRANSMITTER

OK

4	CONFIRM ROOM LAMP ON

(a) Check that the wireless door lock buzzer sounds.

5	SWITCH TO SELF–DIAGNOSTIC MODE

(a) Switch to self–diagnostic mode by operating the ignition key cylinder.
  (1) Put the vehicle under the vehicle's initial condition (See page 73–8), insert the key into the ignition key cylinder and remove it.
  (2) Within 5 seconds after the key is removed (step 1), insert the key into the ignition key cylinder (ignition key OFF) and perform the following once: Turn the ignition switch to ON and return it to OFF.
  (3) Within 30 seconds after the ignition switch is returned to OFF (step 2), perform the following 9 times: Turn the ignition switch to ON and return it to OFF.

NOTICE:
If operation has failed, the system will return to normal mode.
HINT:
- Turning the ignition switch ON after step 3 has been completed will end self–diagnostic mode.
- Do not lock or unlock doors during self–diagnostic mode.

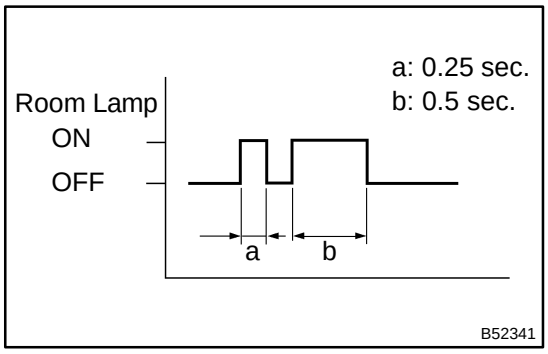

(b) Check that the system has switched to self–diagnostic mode by the blinking frequency of the room lamp.

NG → **Go to step 9**

OK

6 CHECK BY SELF–DIAGNOSTIC MODE

(a) Inspect the diagnosis outputs when the door control transmitter switch is held down (The diagnosis outputs can be checked with the outputs of the room lamp).

HINT:

- In the case of a reception of the normal wave of the door LOCK and UNLOCK switch (room lamp blinking), go to step A.
- In the case of an unmatching recognition code (room lamp ON), go to step B.
- In the case of no diagnosis outputs (room lamp OFF), go to step C.

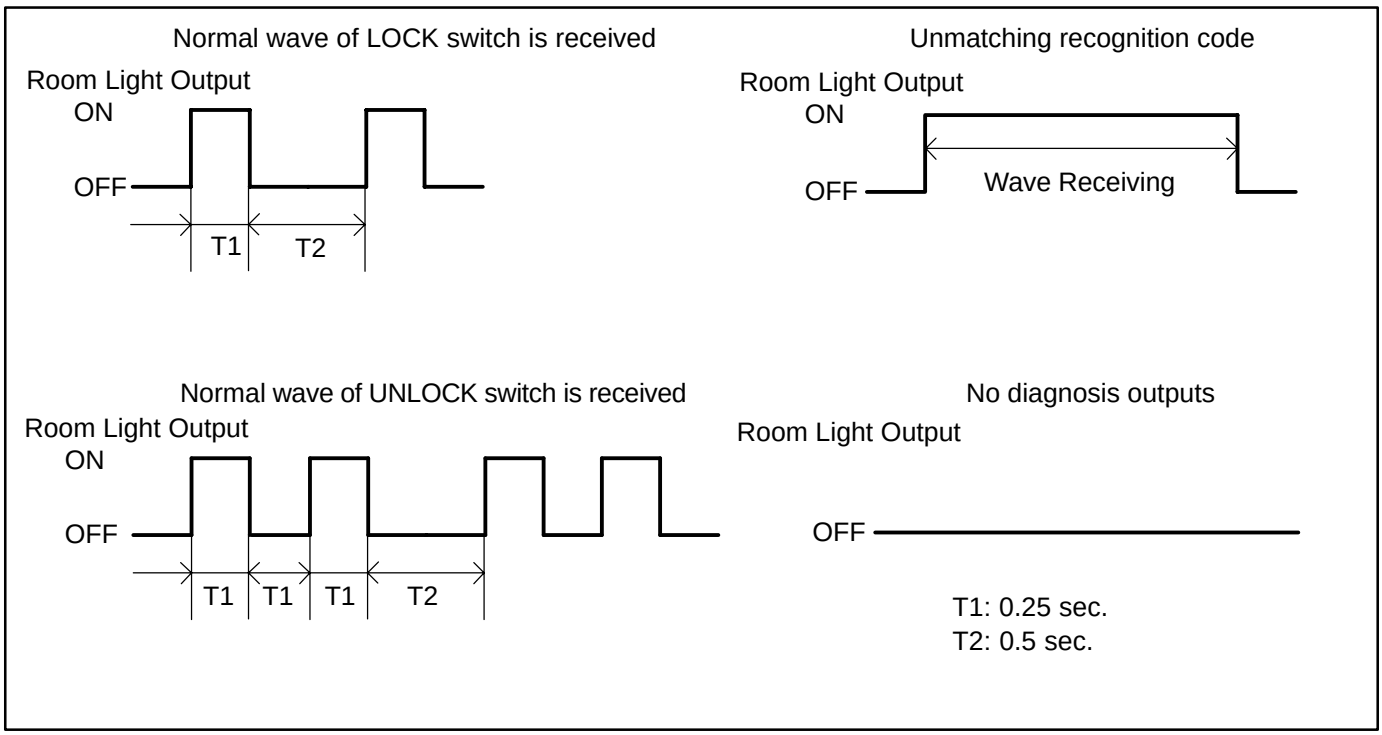

A	Go to step 16
C	Go to step 8

B

7 REGISTER RECOGNITION CODE

(a) Check that the system can switch to rewrite mode or add mode and whether a recognition code can be registered.

NG	Go to step 15

OK

NORMAL

8	CHECK RESPONSE OF DOOR CONTROL RECEIVER

(a) When a new or normal door control transmitter switch for the same type vehicle is held down, check that a diagnosis of unmatching recognition code is output.

NG → **Go to step 12**

OK

REPLACE DOOR CONTROL TRANSMITTER

9	CONFIRM INPUT METHOD OF SELF–DIAGNOSTIC MODE

(a) When the method for switching the system to self–diagnostic mode works, proceed to A.
(b) When the method for switching the system to self–diagnostic mode does not work, proceed to B.

B → **Go to step 5**

A

10	INSPECT UNLOCK WARNING SWITCH ASSY

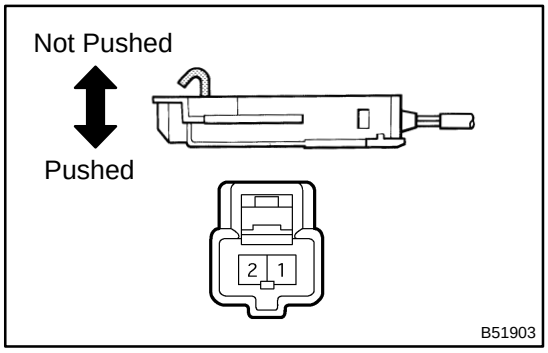

(a) Remove the key unlock warning switch.
(b) Inspect the key unlock warning switch continuity, as shown in the illustration and table.

Standard:

Terminal No.	Switch Condition	Specified condition
1 ⇔ 2	Not pushed	No continuity
	Pushed	Continuity

NG → **REPLACE UNLOCK WARNING SWITCH ASSY**

OK

11	CHECK WIRE HARNESS (UNLOCK WARNING SWITCH ⇔ INSTRUMENT PANEL J/B AND BODY GROUND)

Unlock Warning Switch
(Wire Harness Side)

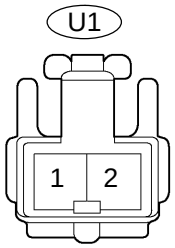

Instrument Panel J/B
(Wire Harness Side)

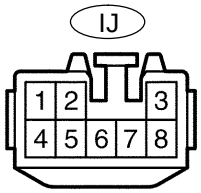

B60080

(a) Disconnect the unlock warning switch and instrument panel J/B connectors.
(b) Check the continuity between the terminals of the unlock warning switch and instrument panel J/B connectors, as shown in the illustration and table.

Standard:

Symbols (Terminal No.)	Specified condition
(U1–2) ⇔ KSW (IJ–8)	Continuity
(U1–1) ⇔ Body ground	

NG → **REPAIR OR REPLACE HARNESS AND CONNECTOR**

OK

12	CHECK WIRE HARNESS (DOOR CONTROL RECEIVER ⇔ BODY GROUND)

Door Control Receiver
(Wire Harness Side)

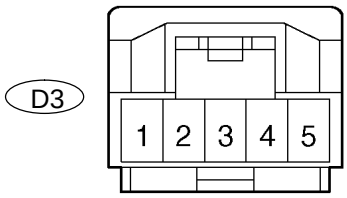

B59092

(a) Disconnect the connector from the door control receiver.
(b) Check the voltage and continuity between the terminal of the door control receiver connector and the body ground, as shown in the illustration and table.

Standard:

Symbols (Terminal No.)	Specified condition
+B (D3–5) ⇔ Body ground	10 – 14 V
GND (D3–1) ⇔ Body ground	Continuity

NG → **REPAIR OR REPLACE HARNESS AND CONNECTOR**

OK

13	CHECK DOOR CONTROL RECEIVER

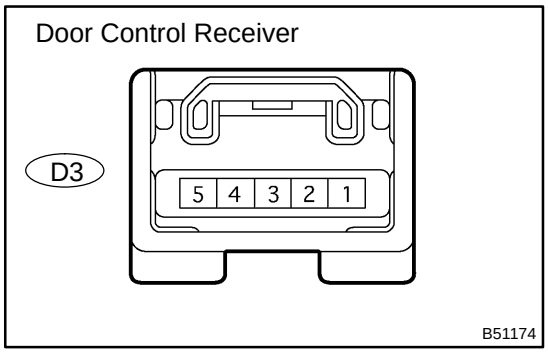

(a) Reconnect the connector to the door control receiver, and check the voltage between the terminal and the body ground, as shown in the illustration and table.

Standard:

Symbols (Terminal No.)	Condition	Specified condition
RDA (D3–2) ⇔ Body ground	No key in ignition key cylinder, all doors closed and each transmitter switch OFF → ON	1 V or less → Approx. 6 – 7 V → 1 V or less

NG → **Go to step 15**

OK

14	CHECK WIRE HARNESS (DOOR CONTROL RECEIVER ⇔ INSTRUMENT PANEL J/B) (DOOR CONTROL RECEIVER OR INSTRUMENT PANEL J/B ⇔ BODY GROUND)

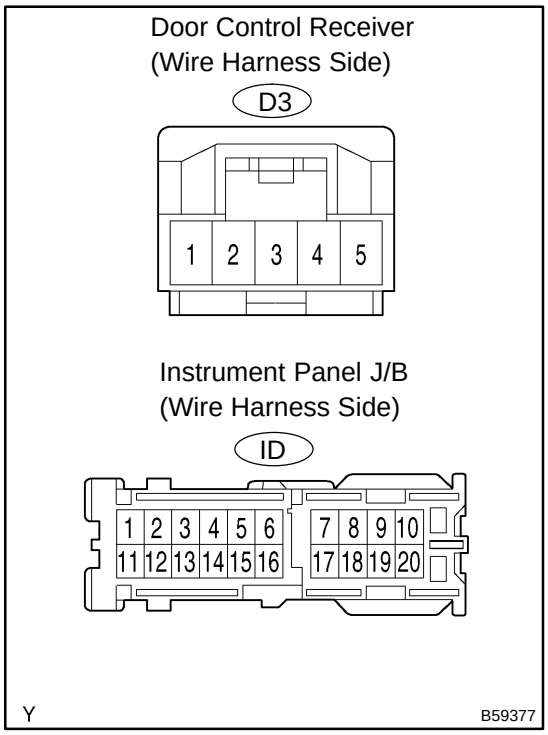

(a) Disconnect the door control receiver and instrument panel J/B connectors.

(b) Check the continuity between the terminals of the door control receiver and instrument panel J/B connectors, as shown in the illustration and table.

Standard:

Symbols (Terminal No.) (Receiver – Instrument panel J/B)	Specified condition
RDA (D3–2) ⇔ RDA (ID–8)	Continuity
RDA (D3–2) ⇔ Body ground	No continuity
RDA (ID–8) ⇔ Body ground	

NG → **REPAIR OR REPLACE HARNESS AND CONNECTOR**

OK

15	REPLACE DOOR CONTROL RECEIVER WITH NORMAL ONE

NG → Go to step 16

OK

REPLACE DOOR CONTROL RECEIVER

16	REPLACE INTEGRATION RELAY WITH NORMAL ONE

NG → REPLACE INSTRUMENT PANEL JUNCTION BLOCK ASSY

OK

REPLACE INTEGRATION RELAY

056BD–07

PROBLEM SYMPTOMS TABLE

Symptom	Suspected area	See page
Only wireless control function is inoperative (Prepare new or normal transmitter of the same type vehicle)	1. Transmitter battery 2. Door control transmitter 3. Door control receiver 4. Unlock warning switch 5. Integration relay 6. Wire harness	05–692

056BC–02

TERMINALS OF ECU

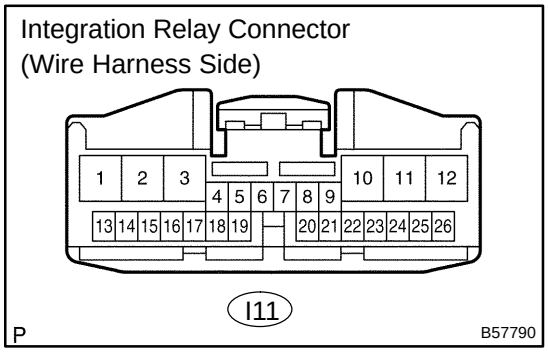

1. INSPECT INTEGRATION RELAY

(a) Disconnect the connector from the integration relay.

(b) Check the continuity between each terminal of the disconnected connector and the body ground, as shown in the illustration and table.

Standard:

Symbols (Terminal No.)	Wiring color	Condition	Specified condition
LSWD (I11–19) ⇔ Body ground	W ⇔ Body ground	Driver's door lock control knob LOCK → UNLOCK	No continuity → Continuity
LSWP (I11–18) ⇔ Body ground	W–R ⇔ Body ground	Front passenger's door lock control knob LOCK → UNLOCK	
L1 (I11–9) ⇔ Body ground	L–W ⇔ Body ground	Door lock control switch (Manual operation) OFF → LOCK	
UL1 (I11–8) ⇔ Body ground	L ⇔ Body ground	Door lock control switch (Manual operation) OFF → UNLOCK	
L2 (I11–7) ⇔ Body ground	G ⇔ Body ground	Using key, front door lock cylinder LOCK → Other position	Continuity → No continuity
UL3 (I11–6) ⇔ Body ground	L–Y ⇔ Body ground	Using key, driver's door lock cylinder UNLOCK → Other position	Continuity → No continuity
UL2 (I11–5) ⇔ Body ground	L–B ⇔ Body ground	Using key, front passenger's door lock cylinder UNLOCK → Other position	
PCTY (I11–13) ⇔ Body ground	R–W ⇔ Body ground	Front passenger's door fully closed → Opened	No continuity → Continuity

If the result is not as specified, the vehicle's side may malfunction.

(c) Reconnect the connector and check the voltage between each terminal and the body ground, as shown in the illustration and table.

Standard:

Symbols (Terminal No.)	Wiring color	Condition	Specified condition
ACTD (I11–1) ⇔ Body ground	R ⇔ Body ground	Driver's door lock OFF → ON	0 V → 10 – 14 V → 1 V or less
HAZ (I11–25) ⇔ Body ground	Y–B ⇔ Body ground	Transmitter LOCK or UNLOCK switch is pushed Hazard warning switch ON	0 V (Hazard not flashing) → 10 – 14 V (Hazard flashing)

If the result is not as specified, the integration relay may malfunction.

2. INSPECT INSTRUMENTAL PANEL J/B (INTEGRATION RELAY)

Instrument Panel J/B (Integration Relay)

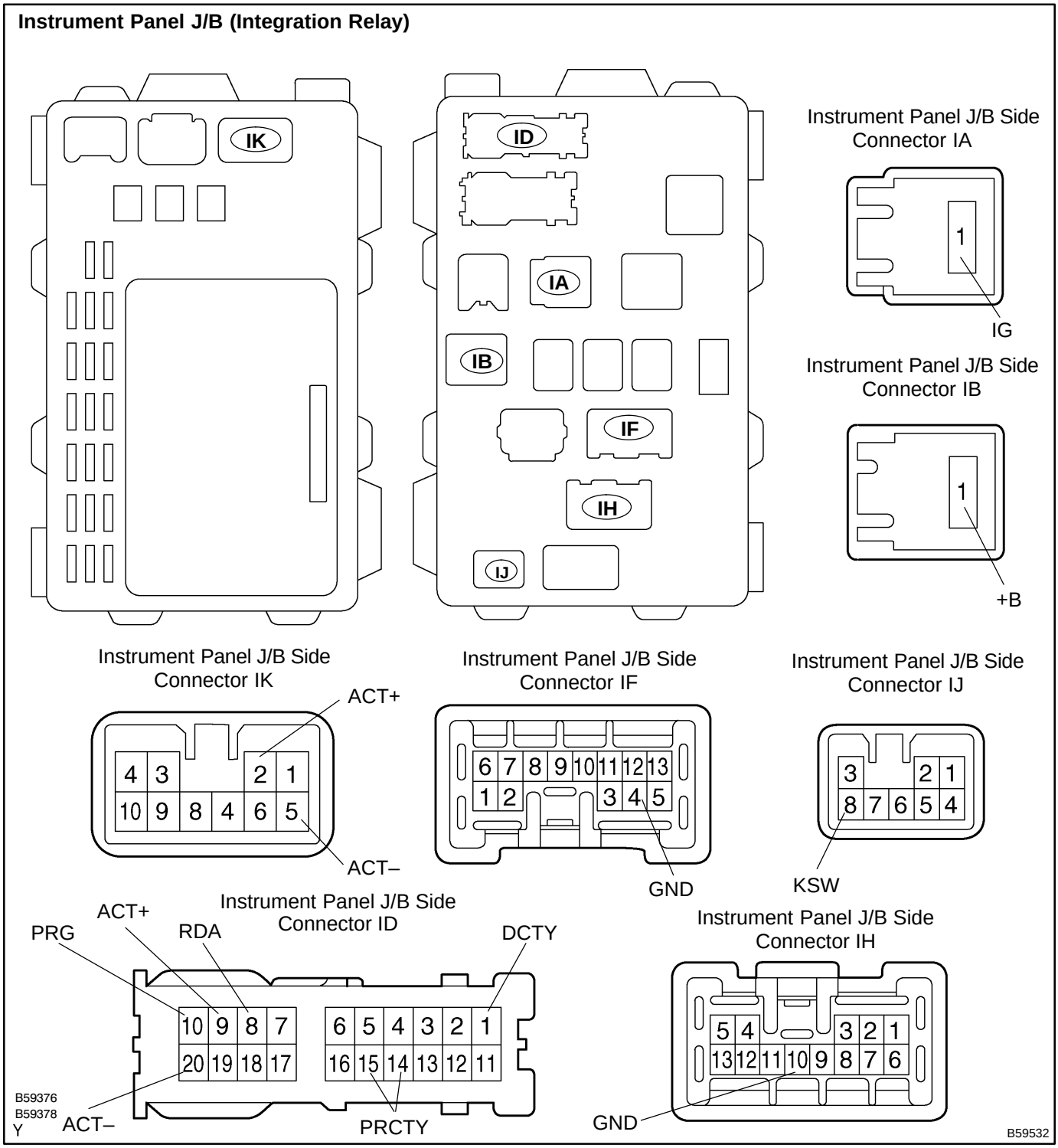

(a) Disconnect the connectors IA, IB, ID, IF, IH and IJ of the instrument panel J/B.
(b) Check the continuity between each terminal of the disconnected connectors and the body ground, as shown in the illustration and table.

Standard:

Symbols (Terminal No.)	Wiring color	Condition	Specified condition
DCTY (ID–1) ⇔ Body ground	R–W ⇔ Body ground	Driver's door fully closed → Opened	No continuity → Continuity
PRCTY (ID–14) ⇔ Body ground	R–B ⇔ Body ground	Rear LH door fully closed → Opened	
PRCTY (ID–15) ⇔ Body ground	R–Y ⇔ Body ground	Rear RH door fully closed → Opened	
KSW (IJ–8) ⇔ Body ground	L–B ⇔ Body ground	No key in ignition switch cylinder → Key inserted	No continuity → Continuity
+B (IB–1) ⇔ Body ground	W ⇔ Body ground	Constant	10 – 14 V
IG (IA–1) ⇔ Body ground	W ⇔ Body ground		
GND (IF–4) ⇔ Body ground	W–B ⇔ Body ground	Constant	Continuity
GND (IH–10) ⇔ Body ground	W–B ⇔ Body ground		

If the result is not as specified, the vehicle's side may malfunction.

(c) Reconnect the connectors and check the voltage between each terminal and the body ground, as shown in the illustration and table.

Standard:

Symbols (Terminal No.)	Wiring color	Condition	Specified condition
ACT+ (IK–2) ⇔ Body ground	L ⇔ Body ground	• Front door lock OFF → ON • Rear RH door lock OFF → ON	0 V → 10 – 14 V → 1 V or less
ACT– (IK–5) ⇔ Body ground	R ⇔ Body ground	• Front passenger's door lock OFF → ON • Rear RH door lock OFF → ON	
ACT+ (ID–9) ⇔ Body ground	L ⇔ Body ground	Rear LH door lock OFF → ON	
ACT– (ID–20) ⇔ Body ground	R ⇔ Body ground		
RDA (ID–8) ⇔ Body ground	L–R ⇔ Body ground	No key in ignition key cylinder, all doors closed and transmitter switch OFF → ON	1 V or less → Approx. 6 – 7 V → 1 V or less

If the result is not as specified, the integration relay or instrument panel J/B assembly may malfunction.

WIRELESS DOOR LOCK CONTROL SYSTEM

HOW TO PROCEED WITH TROUBLESHOOTING

05DUB–01

HINT:

- Troubleshooting of the wireless door lock control system is based on the premise that the power door lock system is operating normally. Therefore, before troubleshooting the wireless door lock control system, first make certain that the the power door lock system is operating normally.
- Use this procedure to troubleshoot the wireless door lock control system.

1	**VEHICLE BROUGHT TO WORKSHOP**

2	**CUSTOMER PROBLEM ANALYSIS CHECK AND SYMPTOM CHECK (See page 05–686)**

3	**PROBLEM SYMPTOMS TABLE (See page 05–691)**

(a) If the fault is not listed on the problem symptoms table, proceed to A.
(b) If the fault is listed on the problem symptoms table, proceed to B.

B	**Go to step 5**

A

4	**OVERALL ANALYSIS AND TROUBLESHOOTING**

(a) Terminals of ECU (See page 05–688)
(b) On–vehicle inspection (See page 73–8)

5	**ADJUST, REPAIR OR REPLACE**

6	**CONFIRMATION TEST**

END

ECM (1ZZ–FE) (April, 2003)

100HN–02

REPLACEMENT

1. DISCONNECT BATTERY NEGATIVE TERMINAL

2. REMOVE GLOVE COMPARTMENT DOOR ASSY (See Page 71–10)

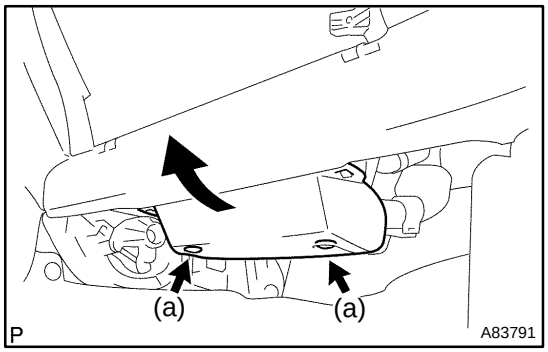

3. REMOVE ECM

(a) Remove the 2 clips using a clip remover. Then, open the cover.

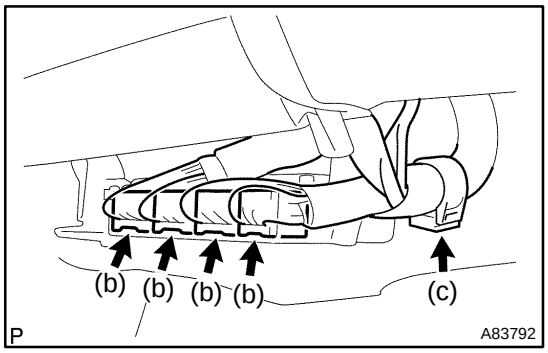

(b) Disconnect the 4 ECM connectors.

(c) Remove the wire harness from the wire harness clamp.

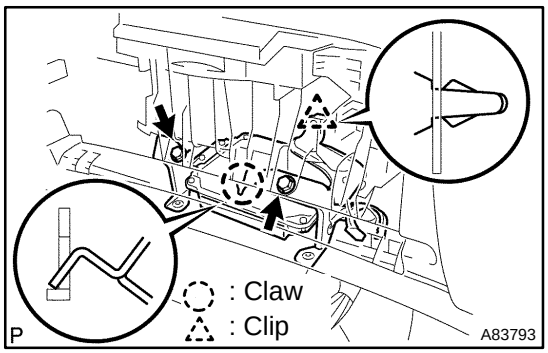

(d) Remove the 2 bolts.

(e) Unfasten the claw and clip, then remove the ECM.

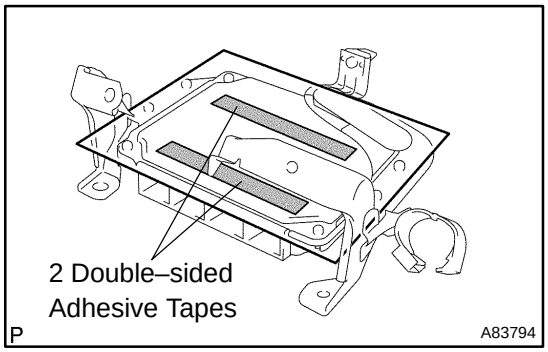

4. REMOVE ECM COVER

(a) Take the 2 double–sided adhesive tapes off the ECM, then remove the ECM cover.

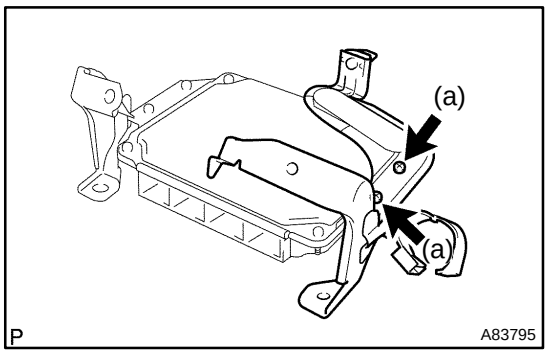

5. REMOVE ECM BRACKET NO.2 (DENSO MADE)

(a) Remove the 2 screws, then remove the ECM bracket No. 2.

6. REMOVE ECM BRACKET NO.1

(a) Remove the 2 screws, then remove the ECM bracket No. 1.

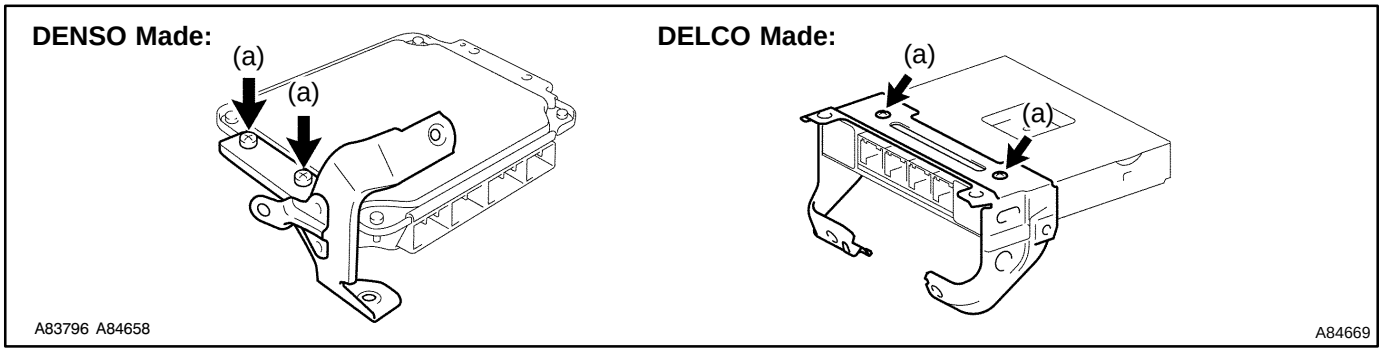

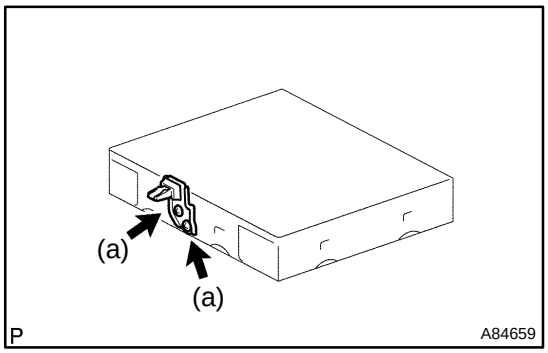

7. REMOVE ECM BRACKET NO.3 (DELCO MADE)

(a) Remove the 2 screws, then remove the ECM bracket No. 3.

8. INSTALL ECM BRACKET NO.3 (DELCO MADE)
Torque: 3.2 N·m (33 kgf·cm, 28 in.·lbf)

9. INSTALL ECM BRACKET NO.1
Torque: 3.2 N·m (33 kgf·cm, 28 in.·lbf)

10. INSTALL ECM BRACKET NO.2 (DENSO MADE)
Torque: 3.2 N·m (33 kgf·cm, 28 in.·lbf)

11. INSTALL ECM COVER

(a) Install a new ECM cover to the ECM as shown in the illustration.

DENSO Made:

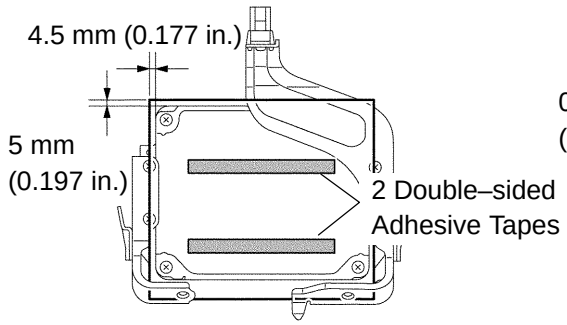

A84660 A84664

DELCO Made:

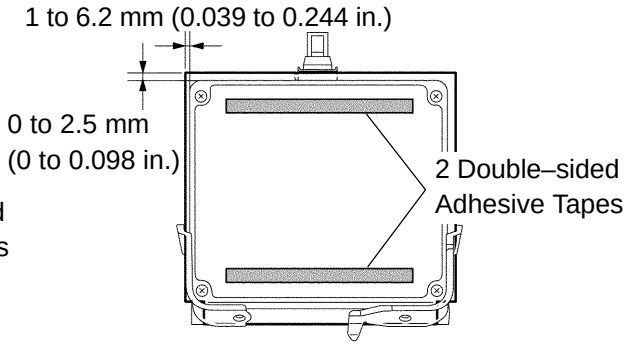

A84670

12. INSTALL ECM
Torque: 3.0 N·m (31 kgf·cm, 27 in.·lbf)

13. INSTALL GLOVE COMPARTMENT DOOR ASSY

14. CONNECT BATTERY NEGATIVE TERMINAL
Torque: 5.4 N·m (55 kgf·cm, 48 in.·lbf)

15. RESET MEMORY (A/T TRANSAXLE)

CAUTION:
Perform the RESET MEMORY (AT initialization) when replacing the ECM, engine assembly or automatic transaxle assembly.

(a) The hand–held tester only.
  (1) Connect the hand–held tester to the DLC3.
  (2) Turn the ignition switch ON.
  (3) Perform the RESET MEMORY procedure from the ENGINE menu.

CAUTION:
After performing the RESET MEMORY, be sure to perform the ROAD TEST as described earlier.

INSPECTION

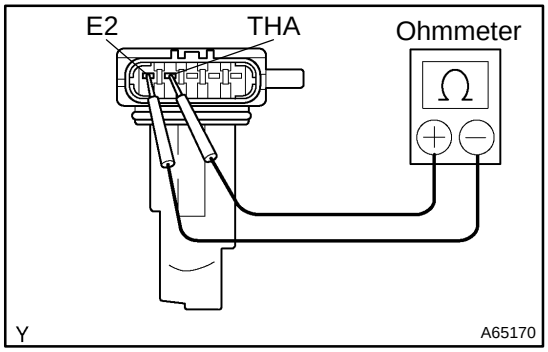

1. INTAKE AIR FLOW METER SUB–ASSY

(a) Inspect the intake air flow meter resistance.

(1) Using an ohmmeter, measure the resistance between terminals THA and E2.

Resistance:

At –20°C (–4°F) 13.6 to 18.4 kΩ
At 20°C (68°F) 2.21 to 2.69 kΩ
At 60°C (140°F) 0.49 to 0.67 kΩ

HINT:

If the resistance is not as specified, replace the intake air flow meter.

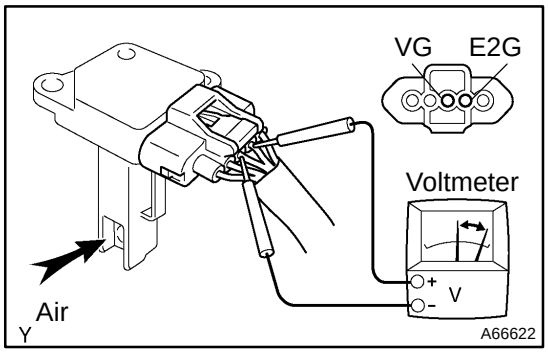

(b) Inspect the intake air flow meter operation.

(1) Connect the intake air flow meter connector.

(2) Turn the ignition switch to ON.

(3) Using a voltmeter, connect the positive (+) tester probe to terminal VG, and negative (–) tester probe to terminal E2G.

(4) Blow air into the intake air flow meter, and check that the voltage fluctuates.

HINT:

If operation is not as specified, replace the intake air flow meter.

(5) Turn the ignition switch to LOCK.

(6) Disconnect the intake air flow meter connector.

2. CAMSHAFT TIMING OIL CONTROL VALVE ASSY

(a) Resistance inspection.

(1) Using an ohmmeter, measure the resistance between the terminals.

Resistance: 6.9 to 7.9 Ω at 20°C (68°F)

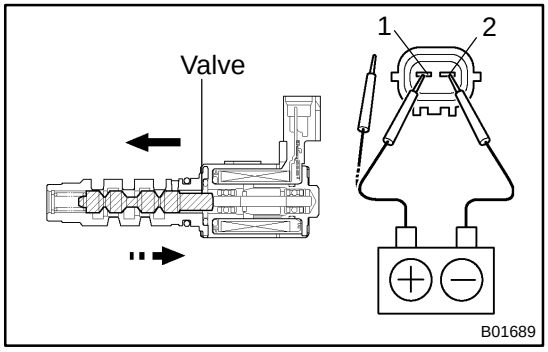

(b) Movement inspection.

(1) Connect the positive (+) lead from the battery to terminal 1 and negative (–) lead to terminal 2, and check the movement of the valve.

NOTICE:

Confirm the valve does not adhere.

HINT:

Bad returning of the valve by entrance of foreign objects causes subtle pressure leak to the advanced direction. Then, DTC can be detected.

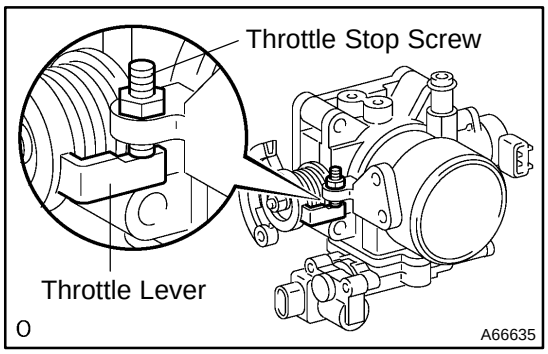

3. THROTTLE BODY ASSY

(a) Check throttle body.
  (1) Check that throttle valve shaft is not rickety.
  (2) Check that each port is not stopped up.
  (3) Check that throttle valve opens and closes smoothly.
  (4) Check that there is no clearance between the throttle stop screw and throttle lever at the throttle closed position.

NOTICE:

Do not adjust the throttle stop screw.

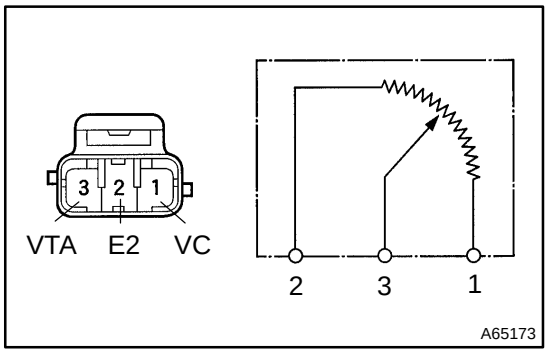

4. E.F.I. THROTTLE POSITION SENSOR

(a) Resistance inspection.
  (1) Disconnect the throttle position sensor connector.
  (2) Using an ohmmeter, measure the resistance between terminals VC and E2.

  Resistance: 2.5 to 6.0 kΩ

  (3) Check the change of resistance between terminals VTA and E2.

  Change of resistance:

  The resistance value increases in proportion to the throttle lever opening value.

HINT:

Throttle valve	Resistance
Fully close	0.2 to 5.7 kΩ
Fully open	2.0 to 10.2 kΩ

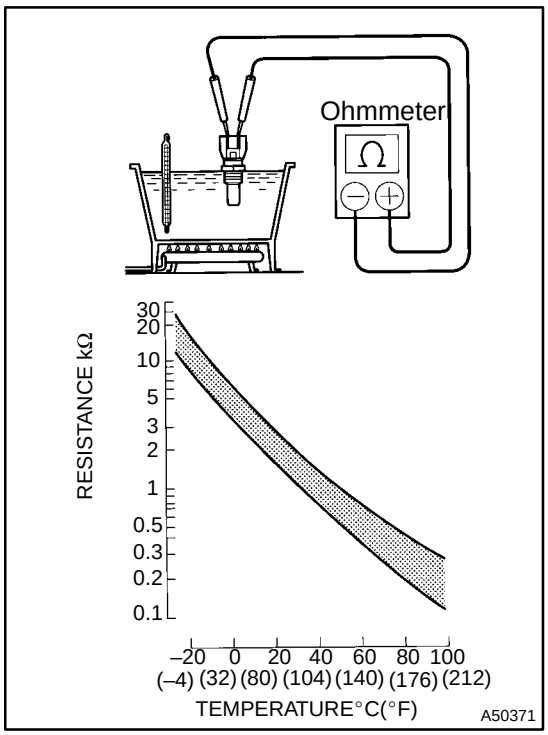

5. E.F.I. ENGINE COOLANT TEMPERATURE SENSOR

(a) Resistance inspection.

(1) Using an ohmmeter, measure the resistance between each terminal.

Resistance:

At 20°C (68°F) 2.32 – 2.59 kΩ

At 80°C (176°F) 0.310 – 0.326 kΩ

NOTICE:

In case of checking the water temperature sensor in the water, be careful not to allow water to go into the terminals, and after checking, wipe out the sensor.

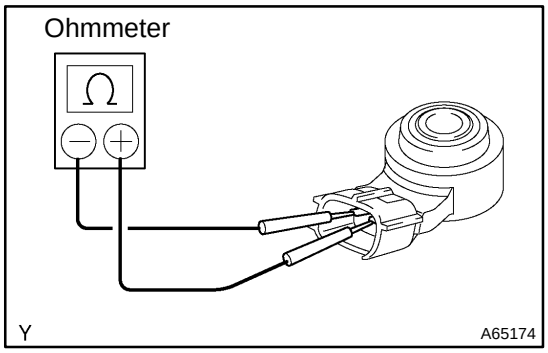

6. KNOCK CONTROL SENSOR

(a) Using an ohmmeter, measure the resistance between terminals.

Resistance: 120 – 280 kΩ at 20°C (68°F)

HINT:

If the resistance is not specified, replace the sensor.

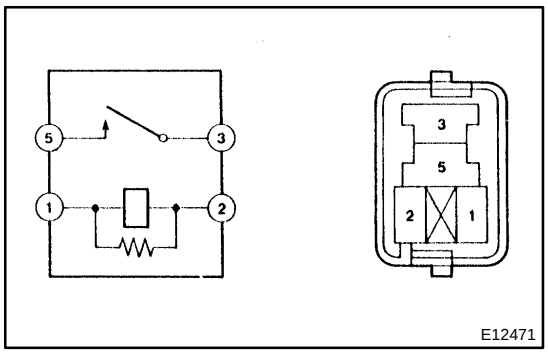

7. E.F.I. CIRCUIT OPENING RELAY ASSY

(a) Continuity inspection.

(1) Using an ohmmeter, check that continuity exists between each terminal.

Specified condition:

Between terminals 1 and 2 Continuity

Between terminals 3 and 5 No continuity

(2) Using an ohmmeter, check that continuity exists between terminals 3 and 5 when the battery voltage is applied across terminals 1 and 2.

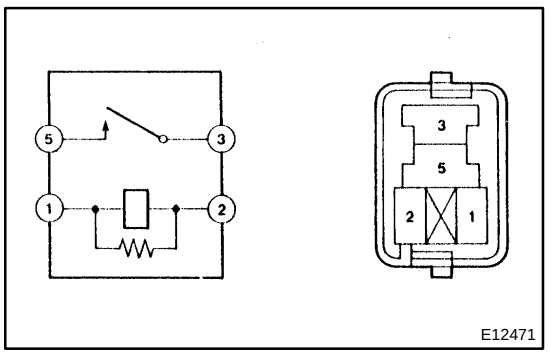

8. E.F.I ECU RELAY

(a) Continuity inspection.

(1) Using an ohmmeter, check that continuity exists between each terminal.

Specified condition:

Between terminals 1 and 2 Continuity

Between terminals 3 and 5 No continuity

(2) Using an ohmmeter, check that continuity exists between terminals 3 and 5 when the battery voltage is applied across terminals 1 and 2.

SFI SYSTEM

ON–VEHICLE INSPECTION

1008D–01

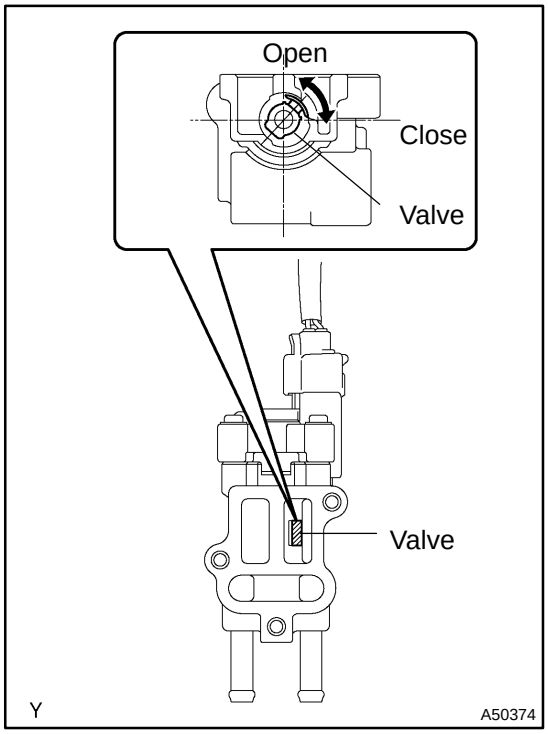

1. INSPECTION THROTTLE BODY IDLE SPEED CONTROL VALVE ASSY

NOTICE:

- **It is impossible to check the resister value and the operation of ISC valve by itself, because the ISC valve has an IC circuit inside it, which transforms the duty signal from the ECM to the derive signal.**
- **After checking, erase the DTC.**
- **Clear the DTC after inspection.**

HINT:

When the ISC valve system has malfunctions except for its adherence, DTC P0505 is detected.

(a) Operation inspection.

(1) Connect the ISC connector to the ISC valve.

(2) Check the ISC valve movement when the ignition switch is turned ON.

Movement:

Half open → fully close → fully open → half open

HINT:

ISC valve moves within 0.5 second.

THROTTLE BODY ASSY

COMPONENTS

1008F–01

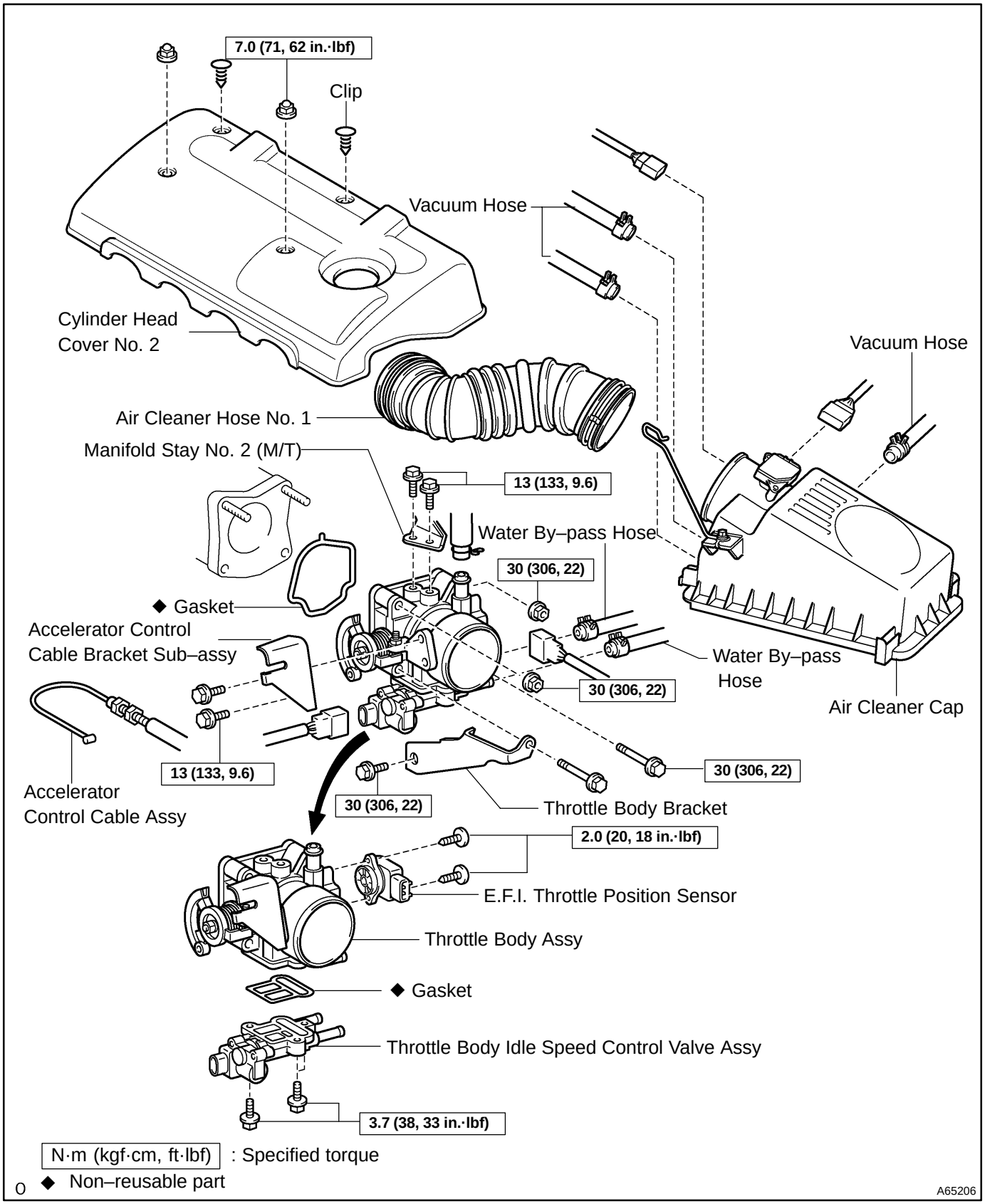

1008G–02

Removal & Installation and Disassembly & Reassembly

1. DRAIN COOLANT(See page 16–7)

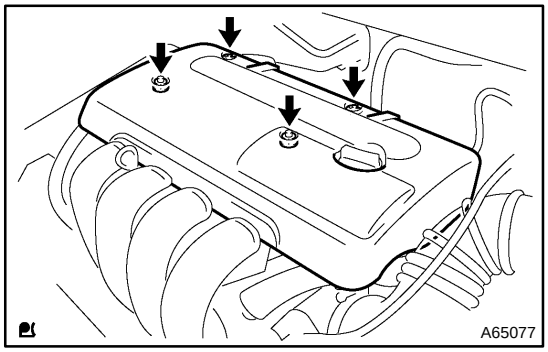

2. REMOVE CYLINDER HEAD COVER NO.2

(a) Remove 2 nuts, 2clips and the cylinder head cover No. 2.

3. REMOVE AIR CLEANER CAP SUB–ASSY

(a) Disconnect the MAF connector.
(b) Disconnect the VSV connector.

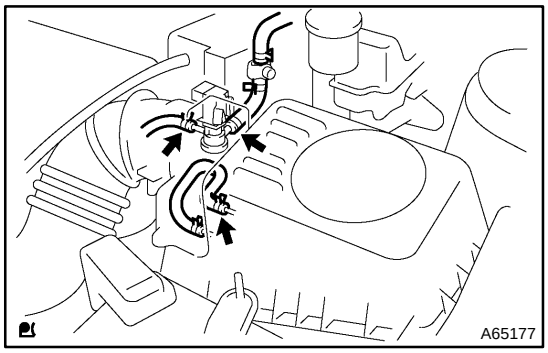

(c) Disconnect 3 vacuum hoses, as shown in the illustration.
(d) Loosen an air cleaner hose clump and disconnect an air cleaner hose No. 1.
(e) Remove the air cleaner cap.

4. REMOVE AIR CLEANER HOSE NO.1

5. SEPARATE ACCELERATOR CONTROL CABLE ASSY

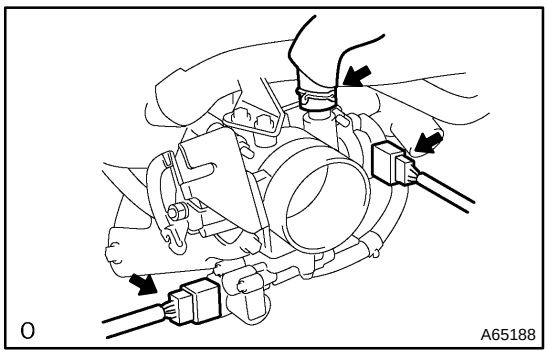

6. REMOVE THROTTLE BODY ASSY

(a) Disconnect an throttle position sensor connector.
(b) Disconnect a throttle body ISC valve assy connector.
(c) Disconnect a PCV hose.

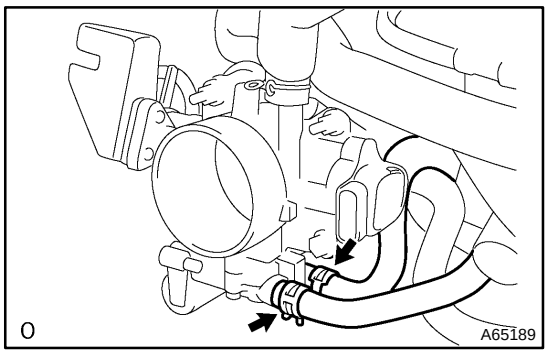

(d) Disconnect 2 water by–pass hoses.

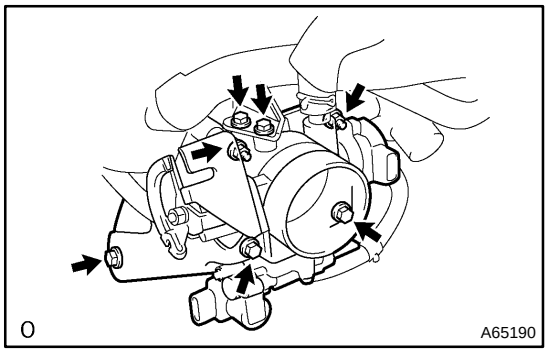

(e) Remove 5 bolts, 2 nuts, throttle body bracket and throttle body. (Transaxle M/T)

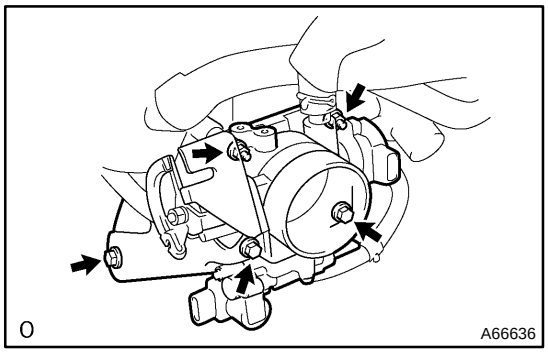

(f) Remove 3bolts, 2nuts and throttle body. (Transaxle A/T)

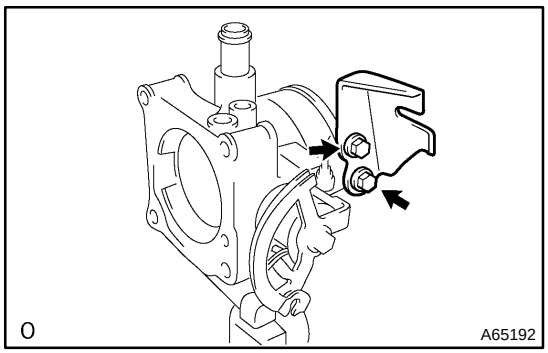

(g) Remove 2 bolts and accelerator cable bracket.

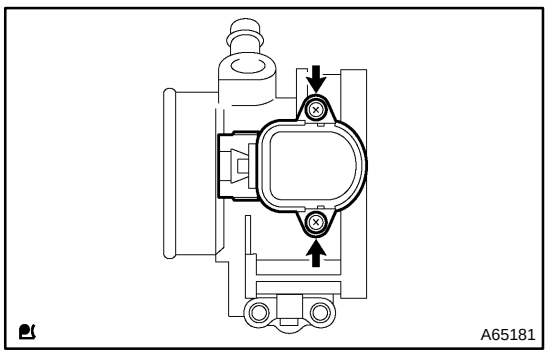

7. REMOVE E.F.I. THROTTLE POSITION SENSOR

(a) Remove 2 screws and the throttle position sensor as shown in the illustration.

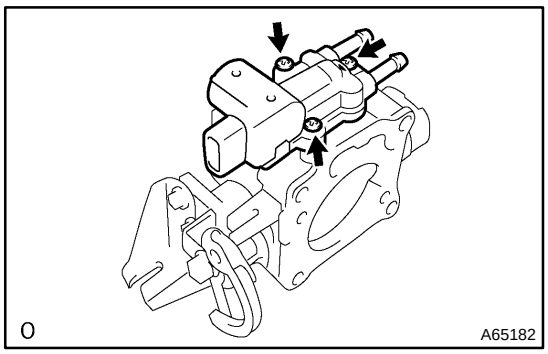

8. REMOVE THLOTTLE BODY IDLE SPEED CONTROL VALVE ASSY

(a) Remove 3 screws and the idle speed control valve assy.

(b) Remove the gasket from the throttle body.

9. INSTALL THLOTTLE BODY IDLE SPEED CONTROL VALVE ASSY

(a) Install a new gasket on the throttle body.

(b) Install the idle speed control valve assy with 3 screws.
Torque: 3.7 N·m (38 kgf·cm, 33 in.·lbf)

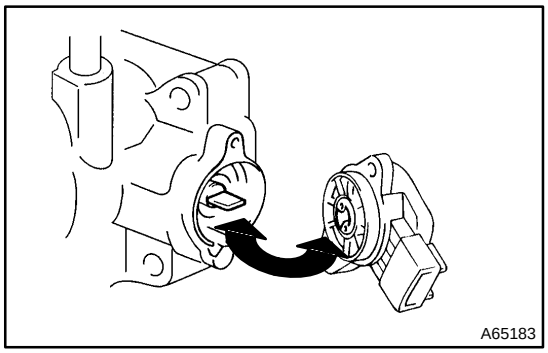

10. INSTALL E.F.I. THROTTLE POSITION SENSOR

(a) Check that the throttle valve is fully close.

(b) insert the throttle position sensor to the throttle body with it turned counterclockwise by 30° to 90° against the fully close valve position.

(c) By turning the throttle position sensor clockwise, tighten 2 screws.
Torque: 2.0 N·m (20 kgf·cm, 18 in.·lbf)

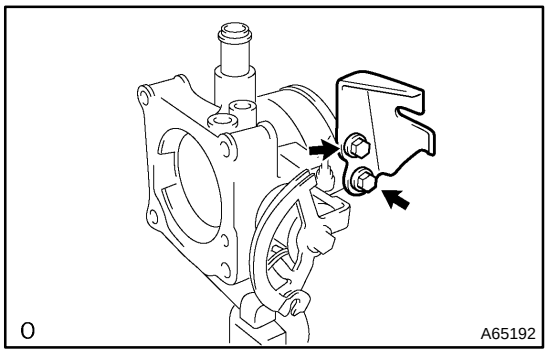

11. INSTALL THROTTLE BODY ASSY

(a) Install the accelerator control bracket with 2 bolts.
Torque: 13 N·m (133 kgf·cm, 9.6 ft·lbf)

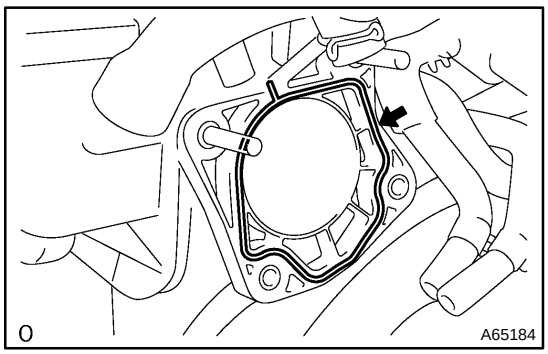

(b) Install a new gasket on the intake manifold, as shown in the illustration.

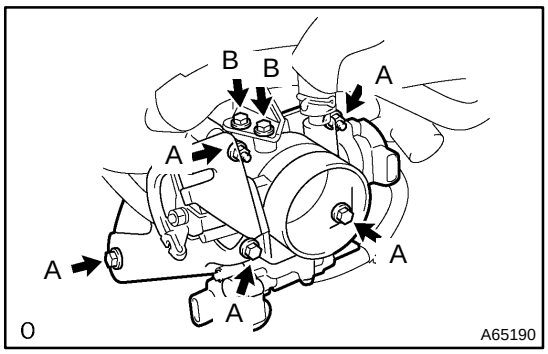

(c) Install the throttle body with 5 bolts and 2 nuts.(Transaxle M/T)
Torque:
A 30 N·m (306 kgf·cm, 22 ft·lbf)
B 13 N·m (133 kgf·cm, 9.6 ft·lbf)

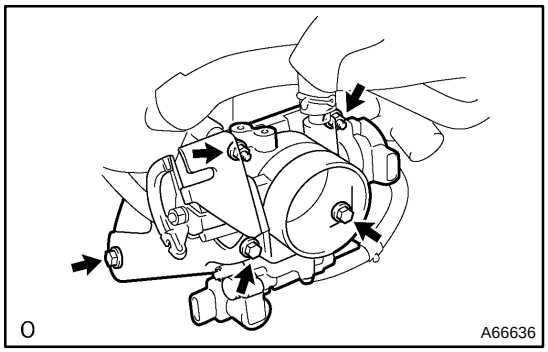

(d) Install the throttle body with 3 bolts and 2 nuts.(Transaxle A/T)
Torque: 30 N·m (306 kgf·cm, 22 ft·lbf)

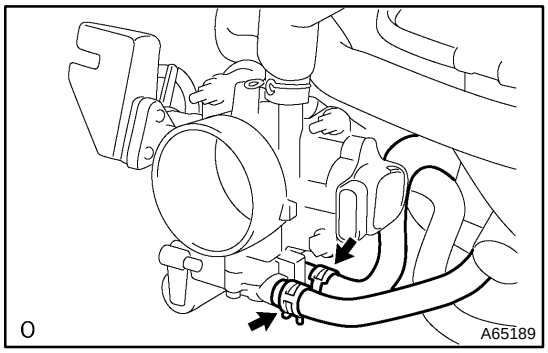

(e) Connect 2 water by–pass hoses to the throttle body.

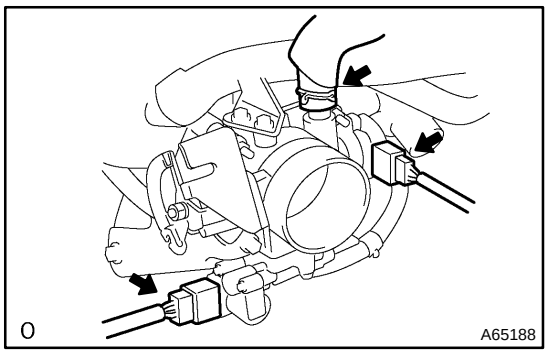

(f) Connect the PCV hose to the throttle body.
(g) Connect the throttle body idle speed control valve assy connector to the throttle body.
(h) Connect the throttle position sensor connector to the throttle body.

12. INSTALL AIR CLEANER CAP SUB–ASSY
(a) Install the air cleaner cap.
(b) Connect the air cleaner hose.

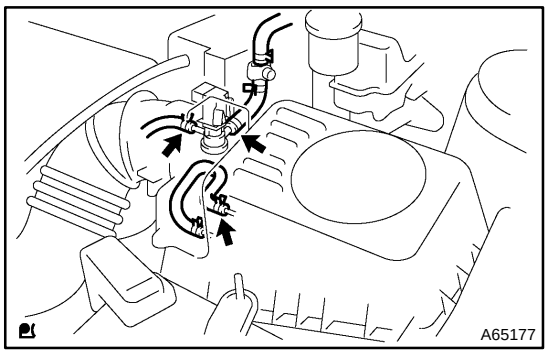

(c) Connect 3 vacuum hoses, as shown in the illustration.
(d) Connect the VSV connector.
(e) Connect the intake air flow meter connector.

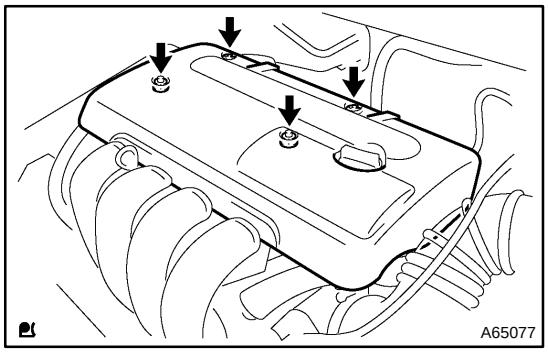

13. INSTALL CYLINDER HEAD COVER NO.2

(a) Install the cylinder head cover No. 2 with 2 nuts and 2 clips.
Torque: 7.0 N·m (71 kgf·cm, 62 in.·lbf)

14. ADD COOLANT(See page 16–7)

15. CHECK ENGINE COOLANT LEAK(See page 16–1)

FUEL INJECTOR ASSY

110FI–01

COMPONENTS

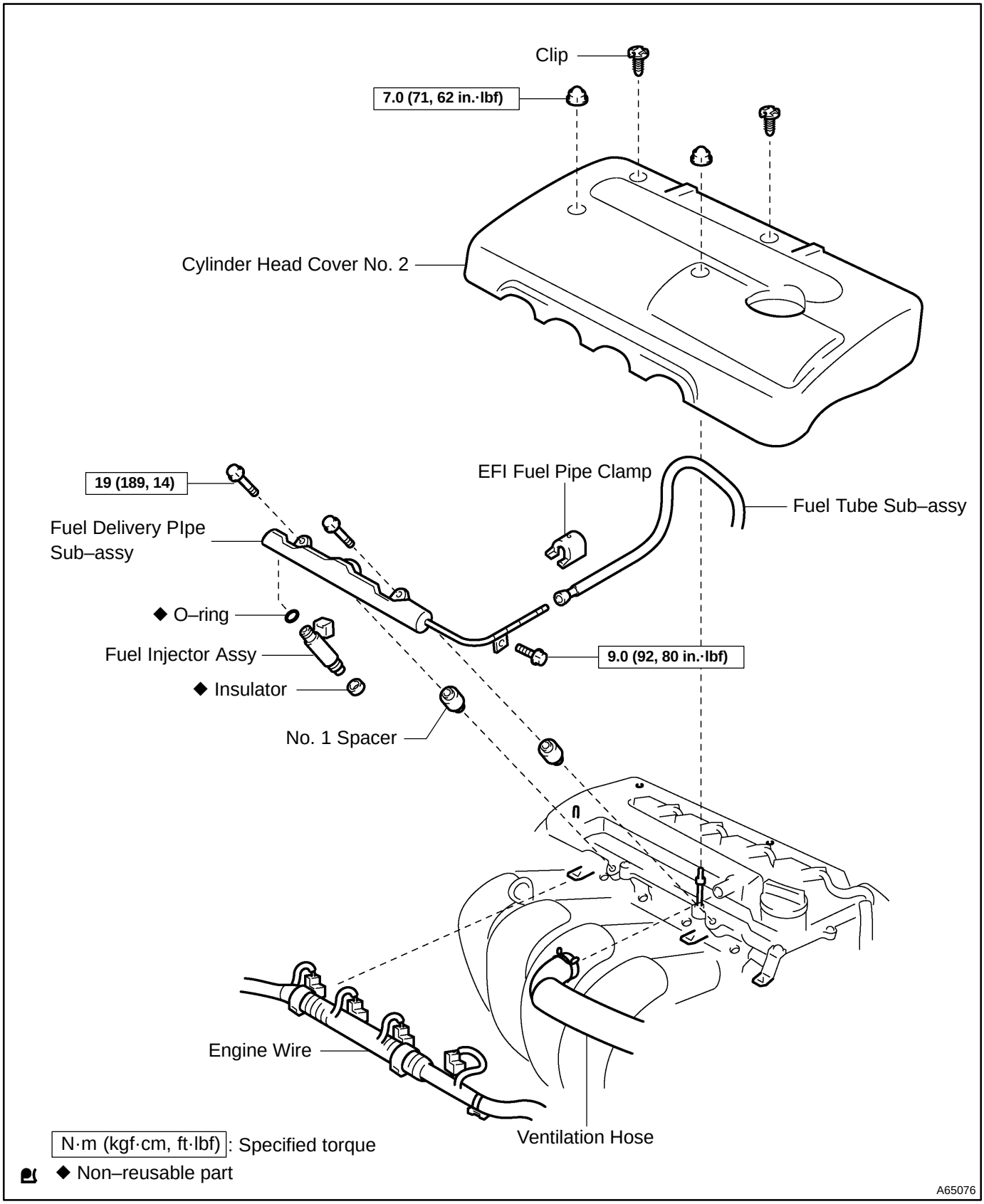

110FJ–01

REPLACEMENT

1. WORK FOR PREVENTING GASOLINE FROM SPILLING OUT (See page 11–1)

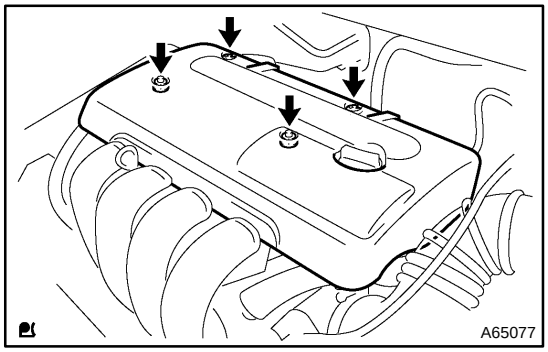

2. REMOVE CYLINDER HEAD COVER NO.2

(a) Remove the 2 nuts, 2 clips and cylinder head cover.

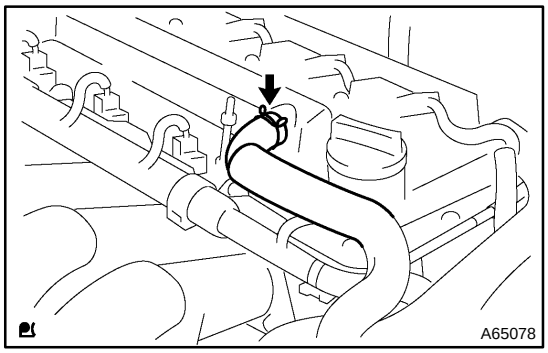

3. DISCONNECT VENTILATION HOSE

(a) Disconnect the ventilation hose from the cylinder head cover.

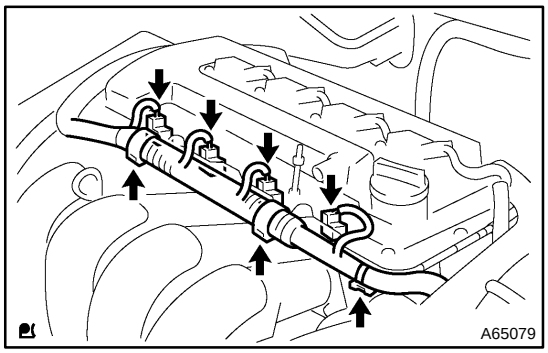

4. DISCONNECT ENGINE WIRE

(a) Disconnect the 4 fuel injector connectors.

(b) Remove the 3 wire harness clamps from the clamp brackets.

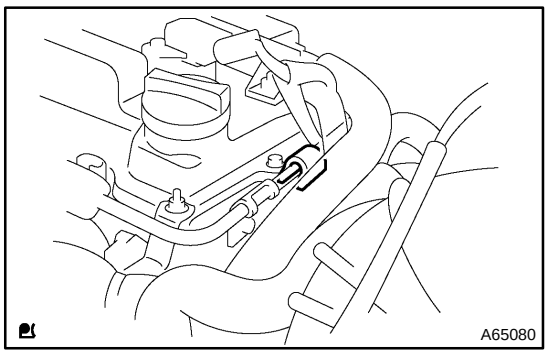

5. REMOVE EFI FUEL PIPE CLAMP

(a) Remove the EFI fuel pipe clamp.

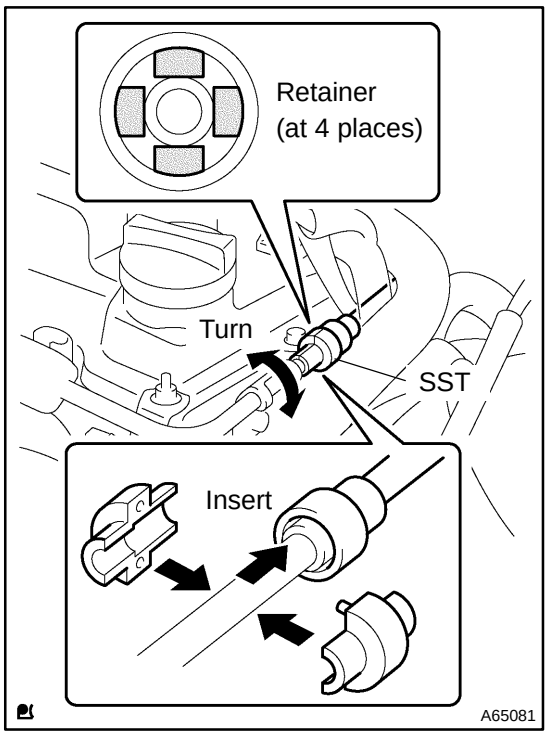

6. DISCONNECT FUEL TUBE SUB–ASSY

(a) Using a SST, disconnect the fuel tube.

SST 09268–21010

(1) Assemble the SST to the connection as shown.

(2) Turn the SST, align the retainers inside the connector with the SST chamfered parts and insert the SST into the connector.

(3) Slide the SST and the connector together towards the fuel tube assembly.

NOTICE:

- **Check if there is dirt mud on the pipe and around the connector before disconnecting them and clean the dirt away.**
- **Do not bent, fold and rotate the nylon tube.**
- **When the connector and the pipe are stuck, push and pull the connector to free to disconnect and pull it out.**
- **Prevent the disconnected pipe and connector from damaging and mixing foreign objects by covering them with a vinyl bag.**

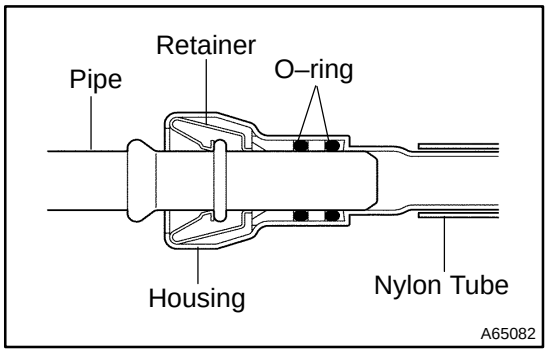

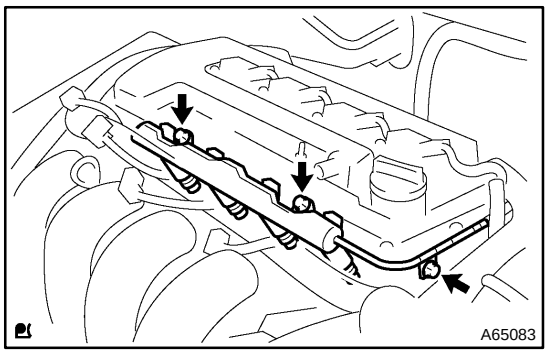

7. REMOVE FUEL DELIVERY PIPE SUB–ASSY

(a) Remove the 3 bolts and fuel delivery pipe together with the 4 fuel injectors.

NOTICE:

Be careful not to drop the fuel injectors when removing the fuel delivery pipe.

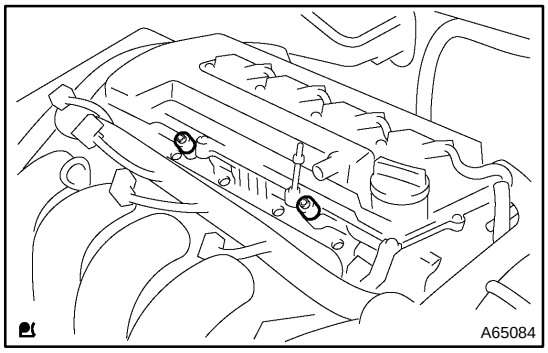

(b) Remove the 2 spacers from the cylinder head.

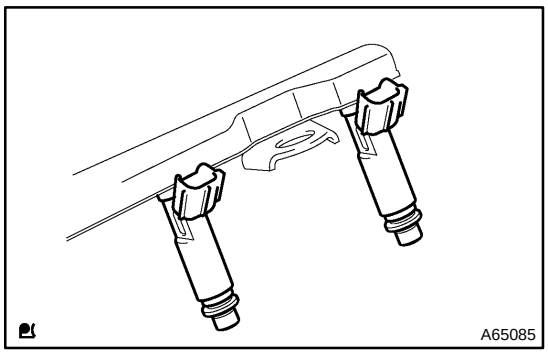

8. REMOVE FUEL INJECTOR ASSY

(a) Pull out the 4 fuel injectors from the fuel delivery pipe.

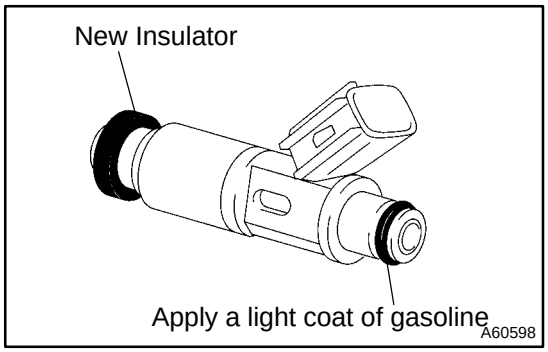

9. INSTALL FUEL INJECTOR ASSY

(a) Install a new insulator to the each fuel injector.

(b) Apply a light coat of spindle oil or gasoline to a new O–ring, and install it to the each fuel injector.

NOTICE:

Never use engine, gear or brake oil.

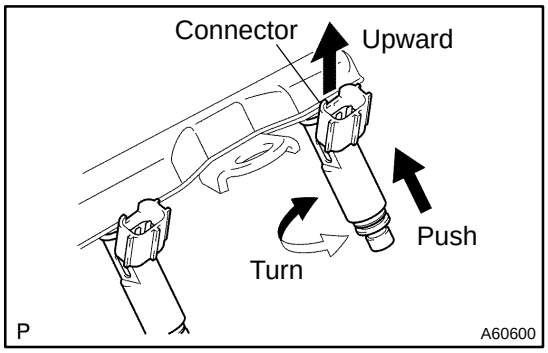

(c) Apply a light coat of spindle oil or gasoline on the place where the fuel delivery pipe touches on the O–ring.

(d) While turning the fuel injector clockwise and counter-clockwise, and push it to the fuel delivery pipe.

NOTICE:

- **Be careful not twist the O–ring.**
- **After installing the fuel injectors, Check that they turns smoothly. If the fuel injector does not, reinstall it with a new O–ring.**

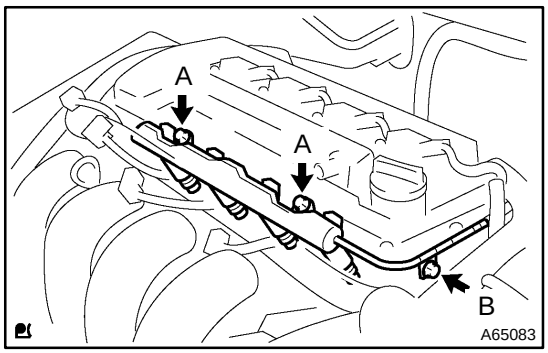

10. INSTALL FUEL DELIVERY PIPE SUB–ASSY

(a) Install the 2 spacers to the cylinder head.

(b) Install the fuel delivery pipe together with the 4 fuel injectors with the 3 bolts.

Torque:

Bolt A 19 N·m (194 kgf·cm, 14 ft·lbf)

Bolt B 9.0 N·m (92 kgf·cm, 80 in.·lbf)

NOTICE:

- **Be careful not drop the fuel injectors when installing the fuel delivery pipe.**
- **Check that the fuel injectors rotate smoothly after installing the fuel delivery pipe.**

11. CONNECT FUEL TUBE SUB–ASSY

(a) Connect the fuel tube to the fuel delivery pipe.

NOTICE:

- **Check if there is any damage or foreign objects on the connected part of the fuel tube.**
- **After connecting, check if the fuel tube and the connector are securely connected by pulling them.**

12. INSTALL CYLINDER HEAD COVER NO.2

(a) Install the cylinder head cover with the 2 nuts and 2 clips.
Torque: 7.0 N·m (71 kgf·cm, 62 in.·lbf)

13. CHECK FUEL LEAK (See page 11–1)

FUEL PUMP ASSY

COMPONENTS

110FK–01

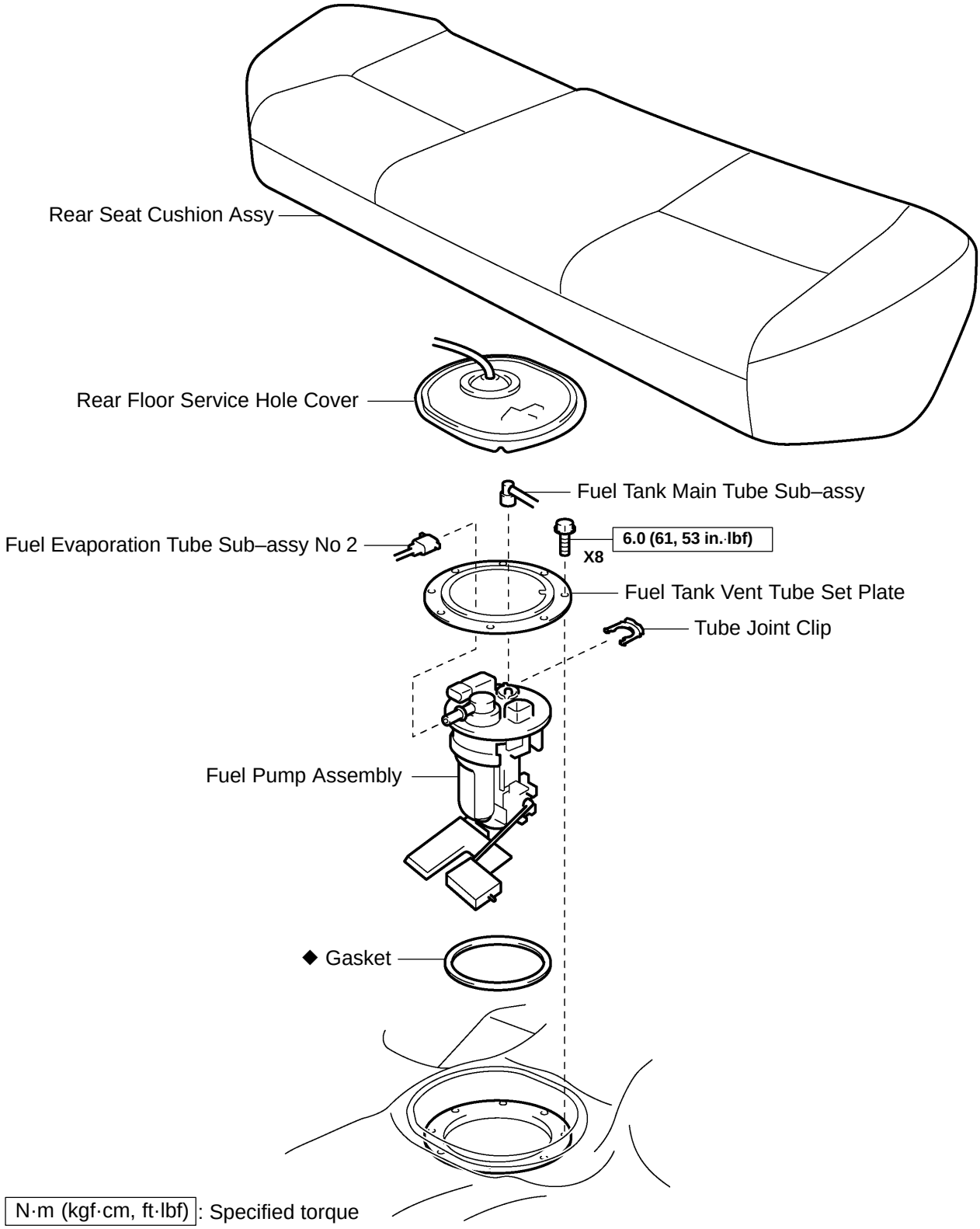

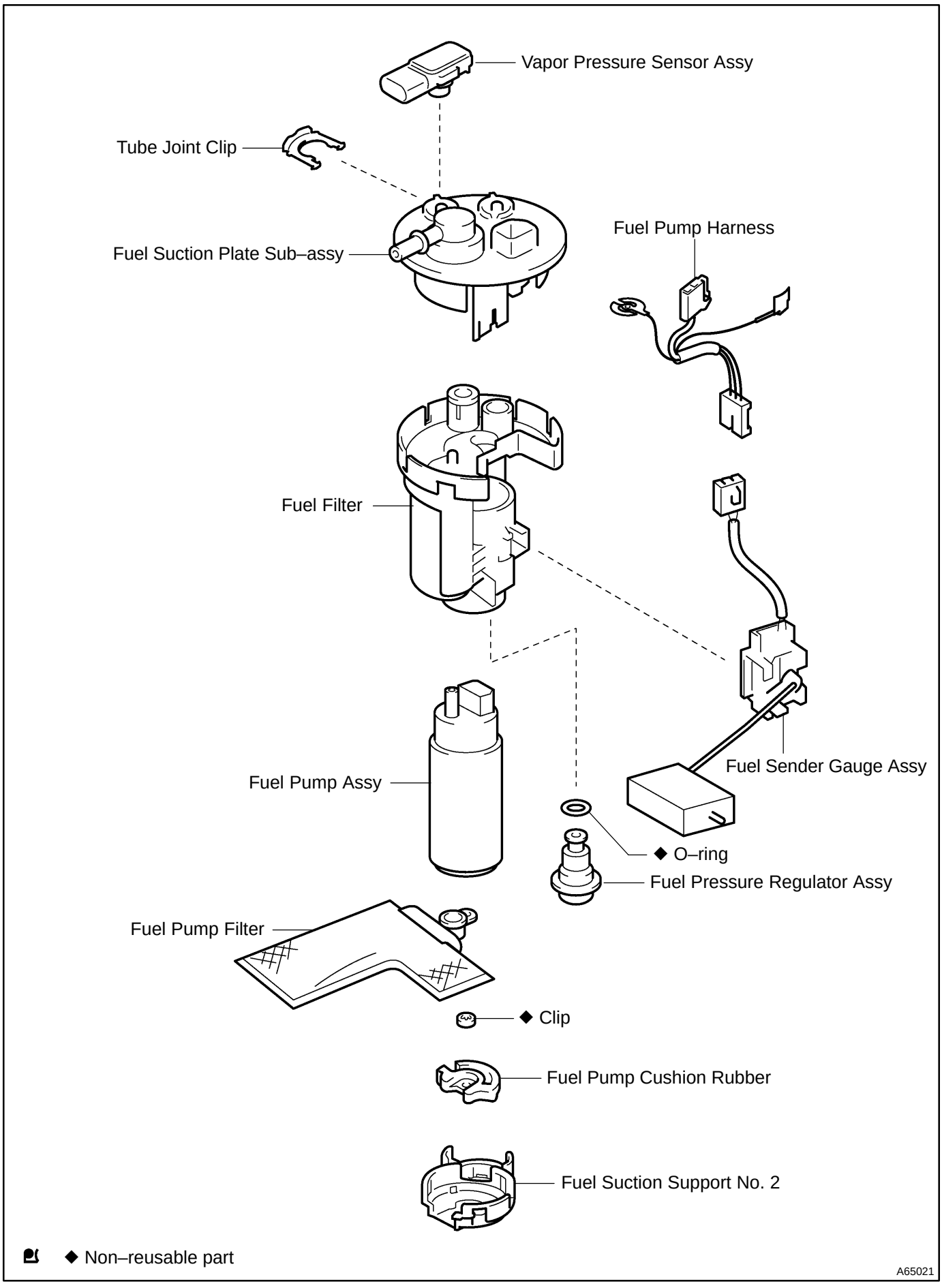
Vapor Pressure Sensor Assy
Tube Joint Clip
Fuel Suction Plate Sub–assy
Fuel Pump Harness
Fuel Filter
Fuel Pump Assy
Fuel Sender Gauge Assy
◆ O–ring
Fuel Pressure Regulator Assy
Fuel Pump Filter
◆ Clip
Fuel Pump Cushion Rubber
Fuel Suction Support No. 2
◆ Non–reusable part
A65021

110FL–01

Removal & Installation and Disassembly & Reassembly

1. REMOVE BENCH TYPE REAR SEAT CUSHION ASSY (See page 72–6, 72–8)

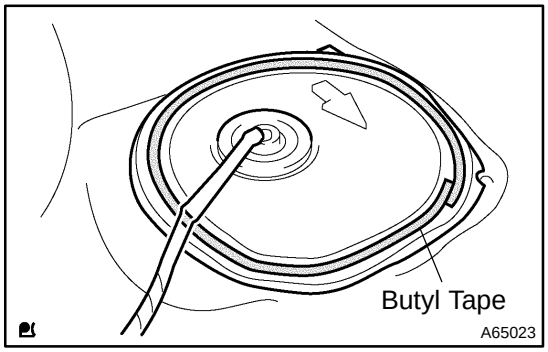

2. REMOVE REAR FLOOR SERVICE HOLE COVER

(a) Remove the rear service hole cover.

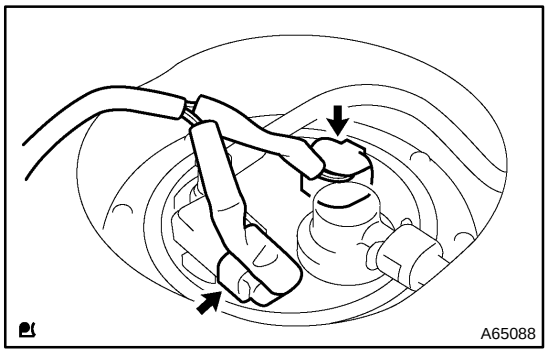

(b) Disconnect the fuel pump and vapor pressure sensor connector.

3. WORK FOR PREVENTING GASOLINE FROM SPILLING OUT

(a) Start the engine.

(b) After the engine has stopped on the its own, turn the ignition switch to lock.

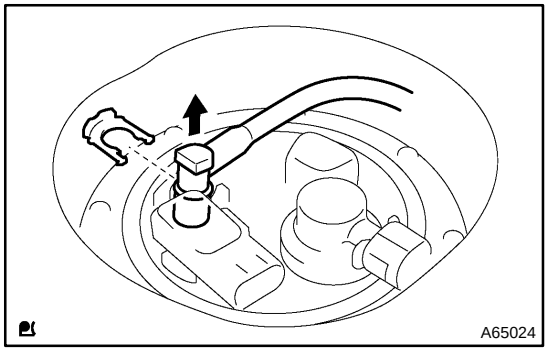

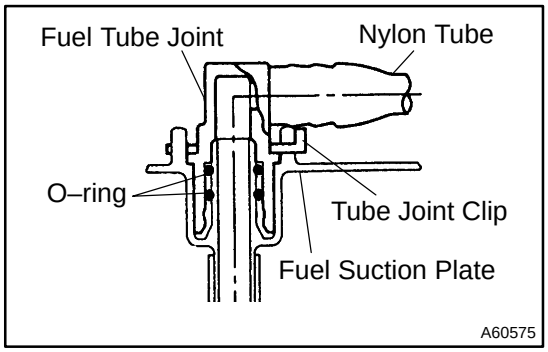

4. DISCONNECT FUEL TANK MAIN TUBE SUB–ASSY

(a) Remove the tube joint clip, and pull out the fuel tank main tube.

NOTICE:

- **Check if there is any dirt like mud around the fuel tube joint before this work and clean dirt away.**
- **Be careful of dirt like mud because the fuel tube joint has an O–ring to seal the fuel tube joint and fuel suction plate.**
- **Do not use any tool in this work.**
- **Do not bend or twist the nylon tube by force.**
- **After disconnecting, cover the fuel tube joint with a vinyl bag.**
- **When the fuel tube joint and fuel suction plate are stuck, pinch the fuel tank main tube between fingers, and turn it carefully to free and then disconnect the fuel tank main tube.**

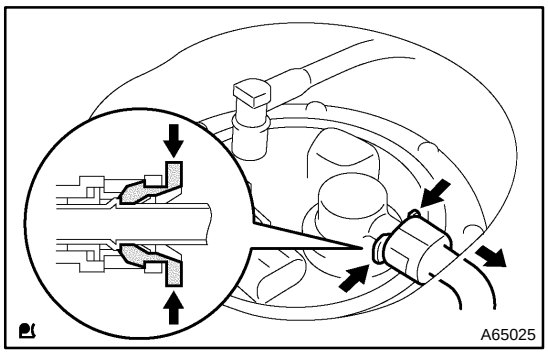

5. DISCONNECT FUEL EMISSION TUBE SUB–ASSY NO.1

(a) Pinch the fuel tube connector clip and then pull out the fuel emission tube.

NOTICE:

- **Check if there is any dirt like mud around the fuel tube connector before this work and clean dirt away.**
- **Be careful of dirt like mud because the fuel tube connector has an O–ring to seal the fuel tube connector and pipe.**
- **Do not use any tool in this work.**
- **Do not bend or twist the nylon tube by force.**
- **After disconnecting, cover the fuel tube connector with a vinyl bag.**
- **When the fuel tube connector and pipe are stuck, pinch the fuel emission tube between fingers, and turn it carefully to free and then disconnect the fuel emission tube.**

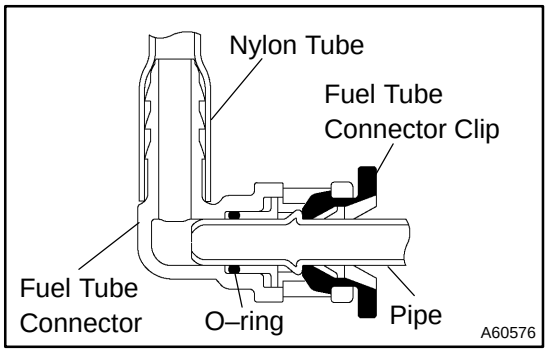

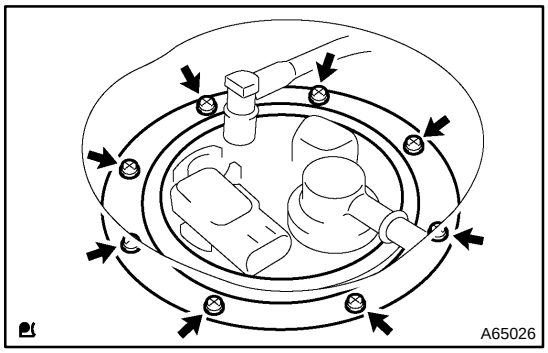

6. REMOVE FUEL TANK VENT TUBE SET PLATE

(a) Remove the 8 bolts and fuel tank vent tube set plate.

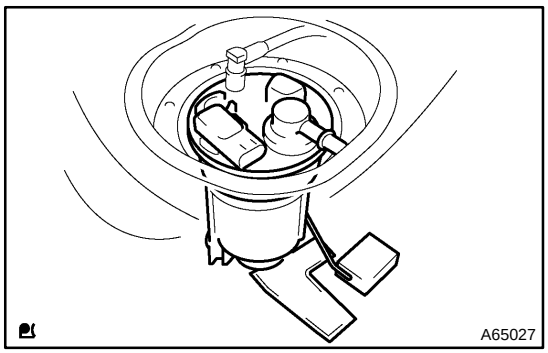

7. REMOVE FUEL PUMP ASSEMBLY

(a) Pull out the fuel pump assembly.

NOTICE:

- **Do not damage the fuel pump filter.**
- **Be careful that the arm of the fuel sender gauge should not bent.**

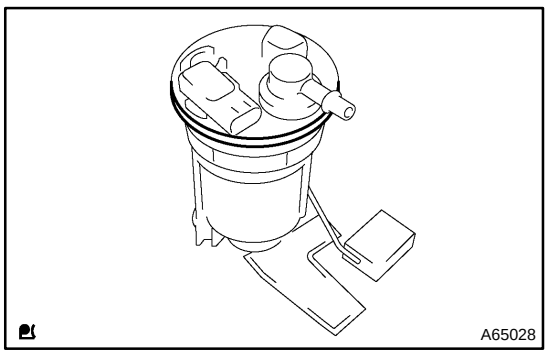

8. REMOVE FUEL SUCTION TUBE SET GASKET

(a) Remove the gasket from the fuel pump assembly.

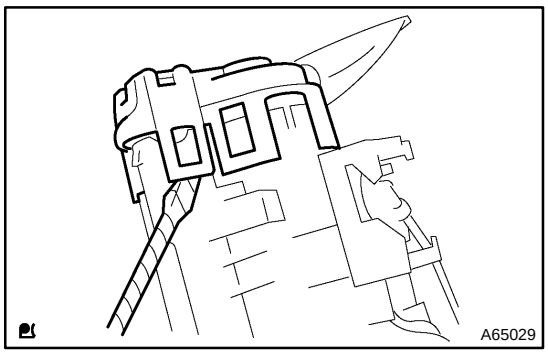

9. REMOVE FUEL SUCTION SUPPORT NO.2

(a) Using a screwdriver, disconnect the 5 snap claws from the claw holes, and remove the fuel suction support.

NOTICE:

Do not damage the fuel suction support.

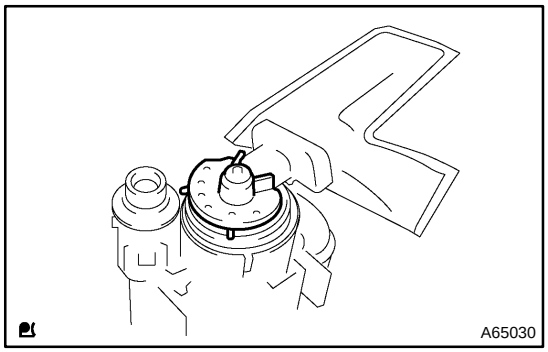

10. REMOVE FUEL PUMP CUSHION RUBBER

(a) Remove the fuel pump cushion rubber.

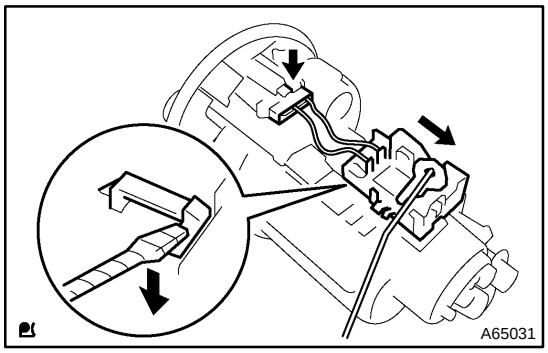

11. REMOVE FUEL SENDER GAGE ASSY

(a) Disconnect the fuel sender gage connector.

(b) Using a screwdriver, unlock the fuel sender gage, and slide it remove.

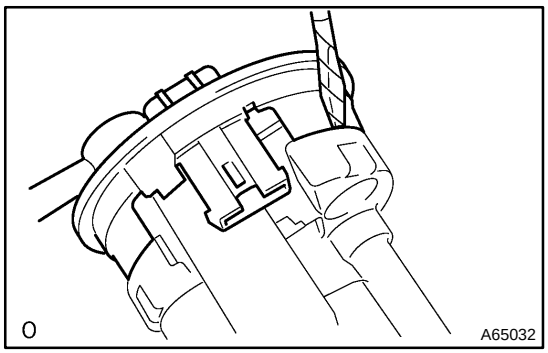

12. REMOVE FUEL SUCTION PLATE SUB–ASSY

(a) Disconnect the fuel pump connector.

(b) Using a screwdriver, disconnect the 4 snap claws from the claw holes, and remove the fuel suction plate.

NOTICE:

Do not damage the fuel suction plate.

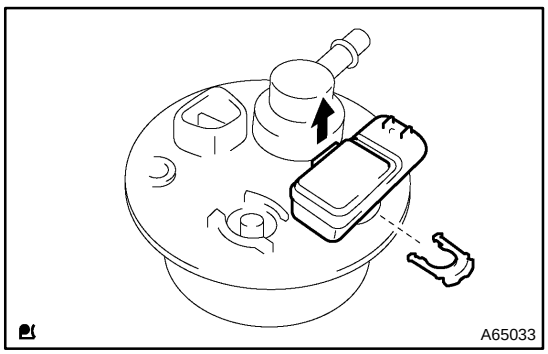

13. REMOVE VAPOR PRESSURE SENSOR ASSY

(a) Remove the tube joint clip, and pull out the vapor pressure sensor.

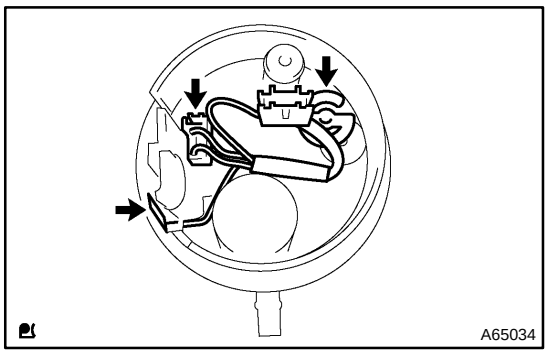

14. REMOVE FUEL PUMP HARNESS

(a) Remove the fuel pump harness from the fuel suction plate.

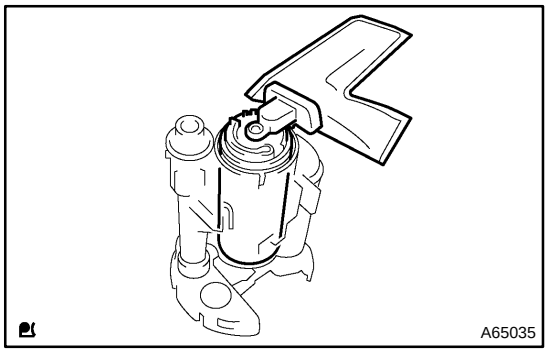

15. REMOVE FUEL PUMP

(a) Pull out the fuel pump from the fuel filter.

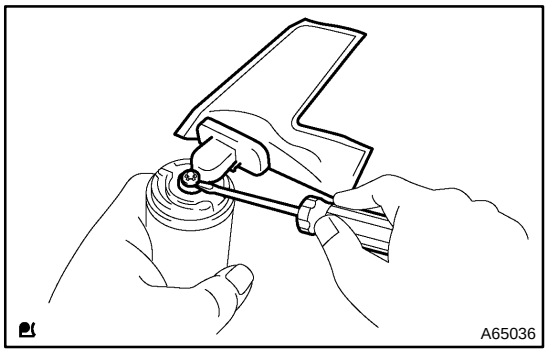

16. REMOVE FUEL PUMP FILTER

(a) Using a small screwdriver, pry out the clip.

(b) Pull out the fuel pump filter from the fuel pump.

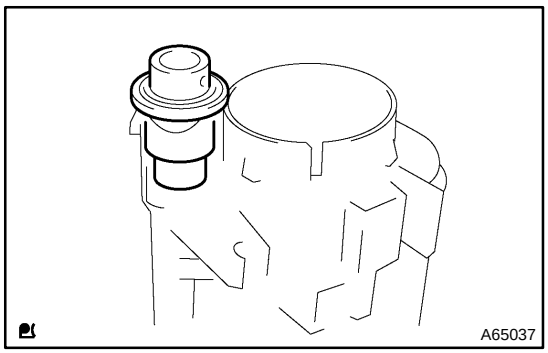

17. REMOVE FUEL PRESSURE REGULATOR ASSY

(a) Pull out the fuel pressure regulator from the fuel filter.

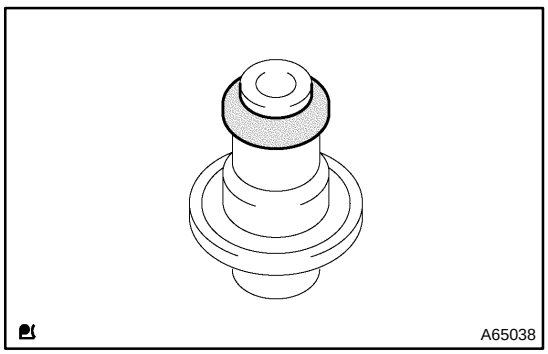

18. REMOVE FUEL PRESSURE REGULATOR O–RING

(a) Remove an O–ring from the fuel pressure regulator.

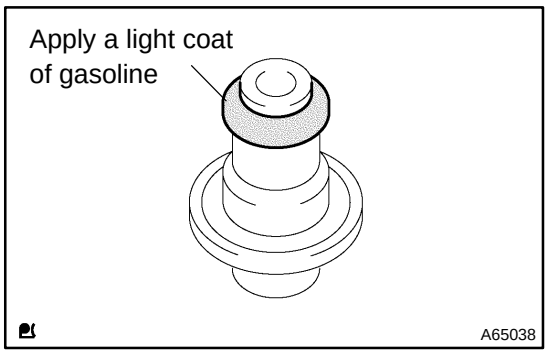

19. INSTALL FUEL PRESSURE REGULATOR O–RING

(a) Apply a light coat of gasoline to a new O–ring, and install it to the fuel pressure regulator.

20. INSTALL FUEL PUMP FILTER

(a) Install the fuel pump filter with a new clip.

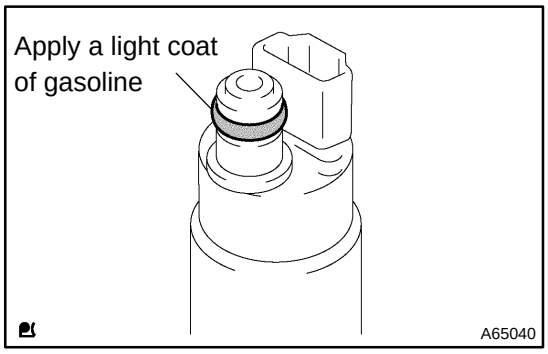

21. INSTALL FUEL PUMP

(a) Apply a light coat of gasoline to an O–ring, and install the fuel pump to the fuel filter.

22. INSTALL VAPOR PRESSURE SENSOR ASSY

(a) Install the vapor pressure sensor with the tube joint clip.

NOTICE:

- **Check that there is no scratch or foreign objects on the connecting parts.**
- **Check that the fuel tube joint is inserted fully and securely.**
- **Check that the tube joint clip is on the collar of the fuel tube joint.**
- **After installing the tube joint clip, check that the fuel tube joint is not pulled off.**

23. INSTALL FUEL SUCTION TUBE SET GASKET

(a) Install a new gasket to the fuel pump assembly.

24. INSTALL FUEL PUMP ASSEMBLY

(a) Install the fuel pump assembly to the fuel tank.

NOTICE:

- **Do not damage the fuel pump filter.**
- **Be careful that the arm of the fuel sender gauge should not bent.**

25. INSTALL FUEL TANK VENT TUBE SET PLATE

(a) Install the fuel tank vent tube set plate with the 8 bolts.

Torque: 6.0 N·m (61 kgf·cm, 53 in.·lbf)

26. CONNECT FUEL EMISSION TUBE SUB–ASSY NO.1

(a) Push in the fuel emission tube to the pipe until fuel tube connector makes ”click” sound.

NOTICE:

- **Check if there is any damage or foreign objects on the connected part.**
- **After connecting, check if the fuel tube connector and pipe are securely connected by pulling them.**

27. CONNECT FUEL TANK MAIN TUBE SUB–ASSY

(a) Connect the fuel tank main tube with the tube joint clip.

NOTICE:

- **Check that there is no scratch or foreign objects on the connecting parts.**
- **Check that the fuel tube joint is inserted fully and securely.**
- **Check that the tube joint clip is on the collar of the fuel tube joint.**
- **After installing the tube joint clip, check that the fuel tube joint is not pulled off.**

28. CHECK FUEL LEAK (See page 11–1)

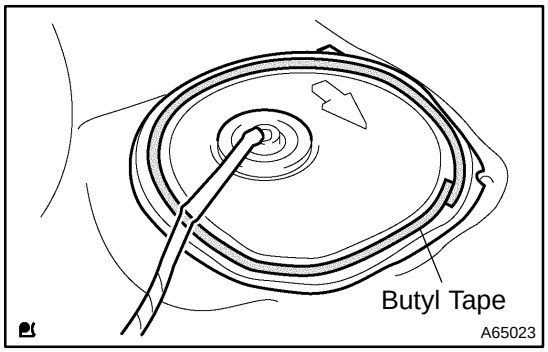

29. INSTALL REAR FLOOR SERVICE HOLE COVER

(a) Using the butyl tape, install the rear floor service hole cover.

30. INSTALL BENCH TYPE REAR SEAT CUSHION ASSY (See page 72–6, 72–8)

FUEL TANK ASSY

COMPONENTS

110FD–01

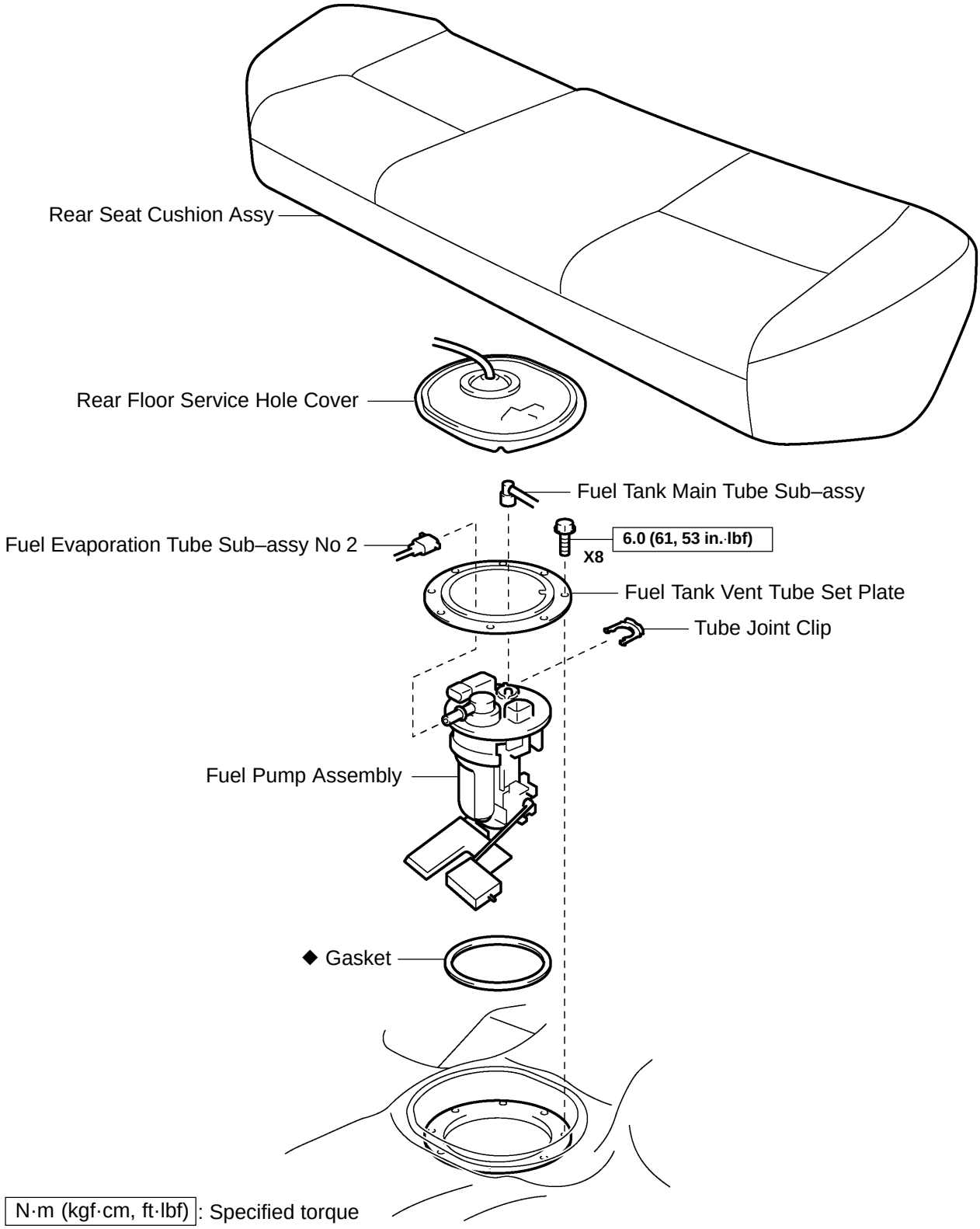

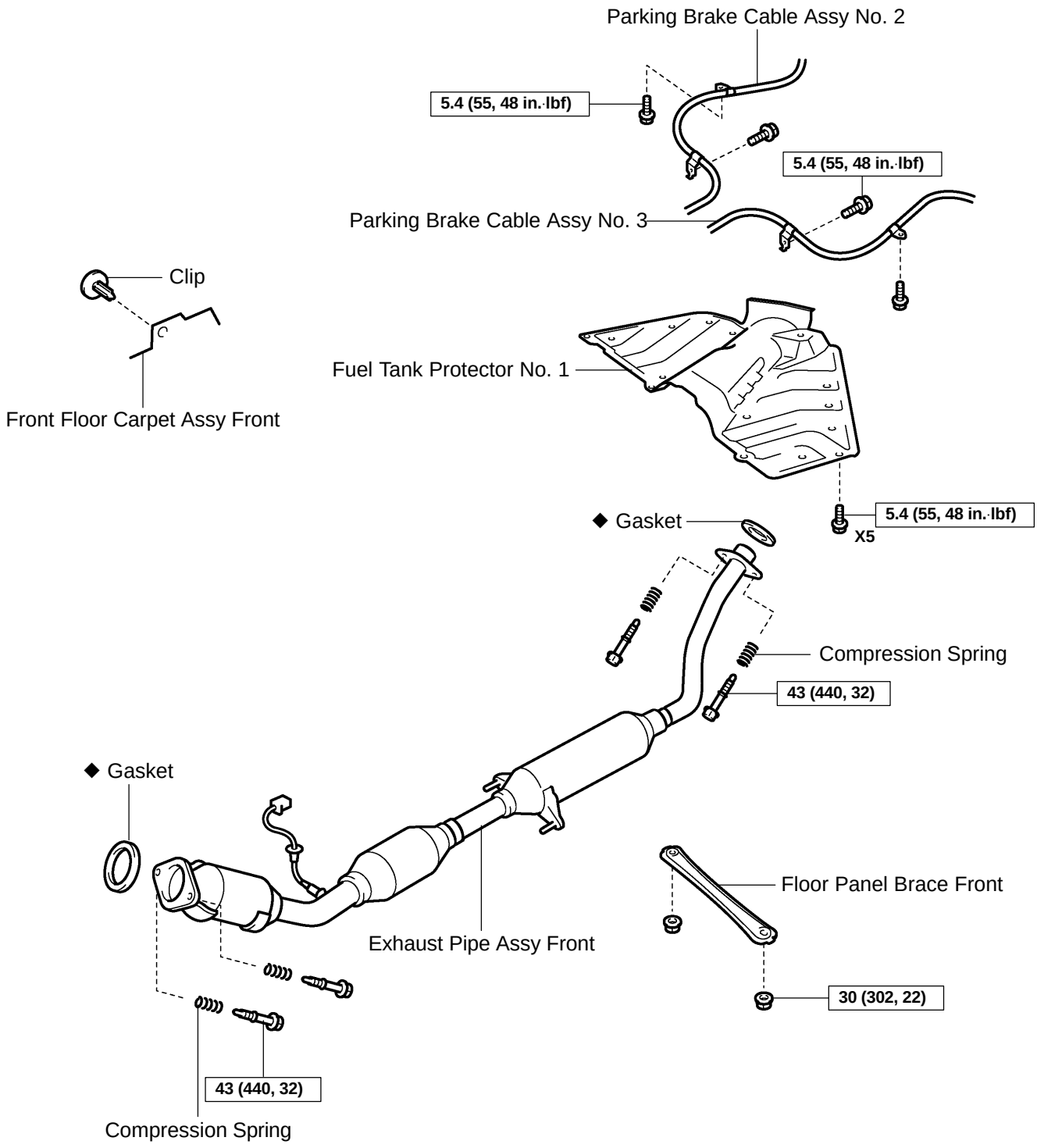

N·m (kgf·cm, ft·lbf): Specified torque

◆ Non–reusable part

A65709

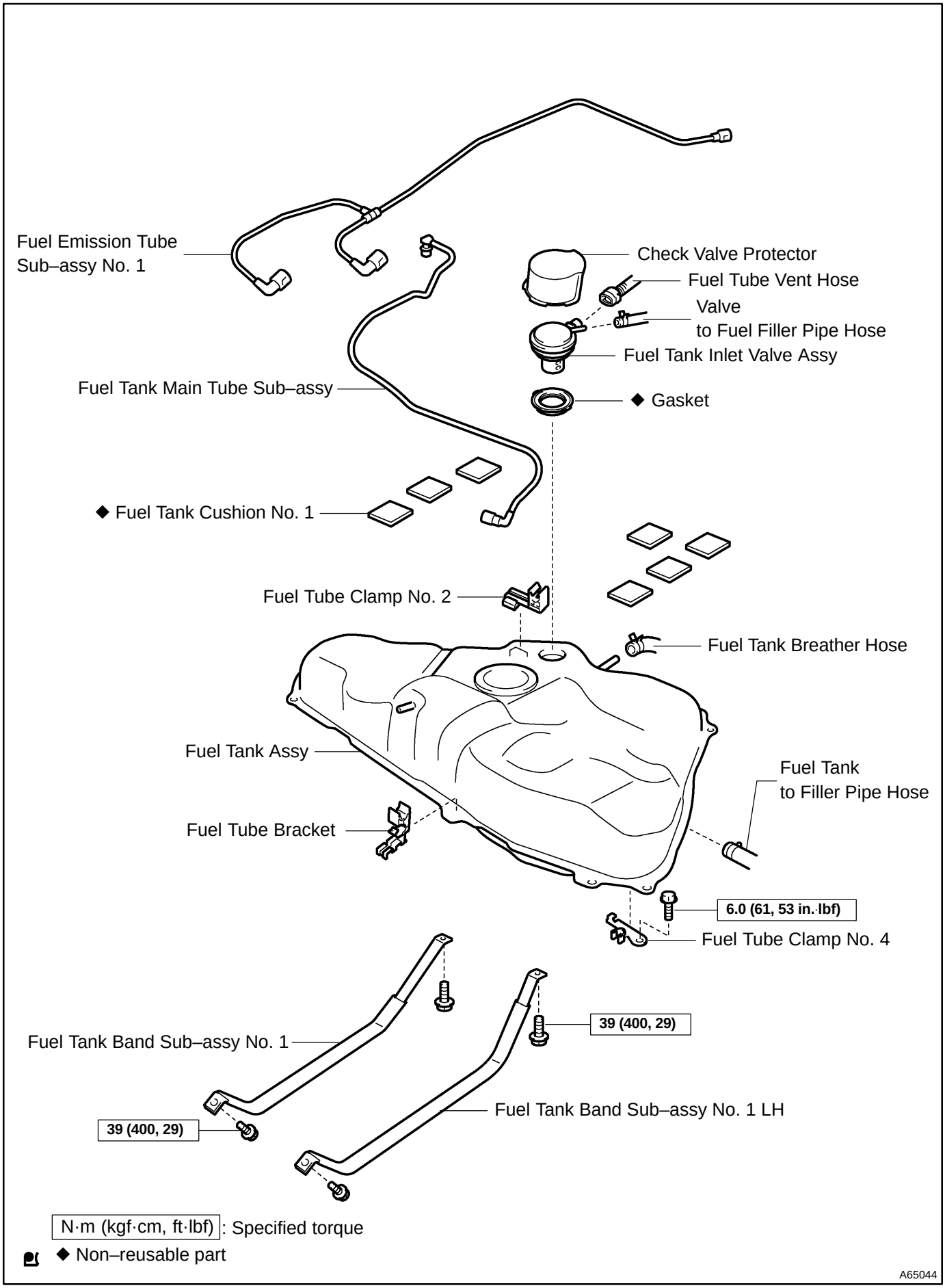
Fuel Emission Tube Sub–assy No. 1
Check Valve Protector
Fuel Tube Vent Hose
Valve to Fuel Filler Pipe Hose
Fuel Tank Inlet Valve Assy
Fuel Tank Main Tube Sub–assy
◆ Gasket
◆ Fuel Tank Cushion No. 1
Fuel Tube Clamp No. 2
Fuel Tank Breather Hose
Fuel Tank Assy
Fuel Tank to Filler Pipe Hose
Fuel Tube Bracket
6.0 (61, 53 in.·lbf)
Fuel Tube Clamp No. 4
39 (400, 29)
Fuel Tank Band Sub–assy No. 1
39 (400, 29)
Fuel Tank Band Sub–assy No. 1 LH
N·m (kgf·cm, ft·lbf): Specified torque
◆ Non–reusable part
A65044

110FE–01

Removal & Installation and Disassembly & Reassembly

1. REMOVE BENCH TYPE REAR SEAT CUSHION ASSY (See page 72–6, 72–8)
2. REMOVE REAR FLOOR SERVICE HOLE COVER (See page 11–16)
3. WORK FOR PREVENTING GASOLINE FROM SPILLING OUT
(a) Start the engine.
(b) After the engine has stopped on the its own, turn the ignition switch to lock.
4. DISCONNECT FUEL TANK MAIN TUBE SUB–ASSY (See page 11–16)
5. DISCONNECT FUEL EMISSION TUBE SUB–ASSY NO.1 (See page 11–16)
6. REMOVE FUEL TANK VENT TUBE SET PLATE (See page 11–16)
7. REMOVE FUEL PUMP ASSEMBLY (See page 11–16)
8. REMOVE FUEL SUCTION TUBE SET GASKET
9. DRAIN FUEL

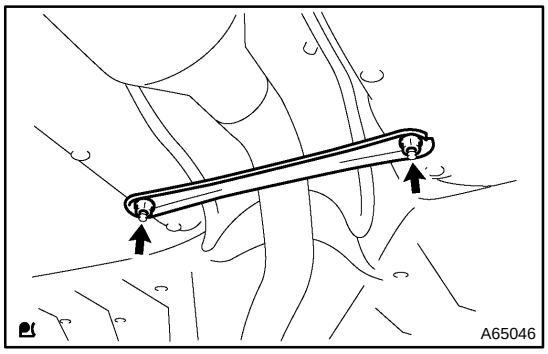

10. REMOVE FLOOR PANEL BRACE FRONT
(a) Remove the 2 nuts and floor panel brace front.

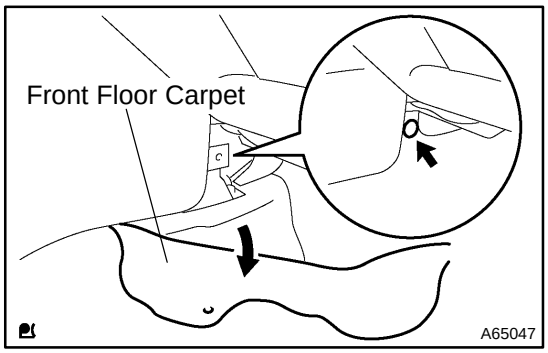

11. REMOVE EXHAUST PIPE ASSY FRONT
(a) Using a clip remover, remove the clip.
(b) Tear off the front floor carpet.

(c) Disconnect the oxygen sensor connector.
(d) Remove the 2 exhaust pipe supports.
(e) Remove the 4 bolts, 4 compression springs and exhaust pipe.

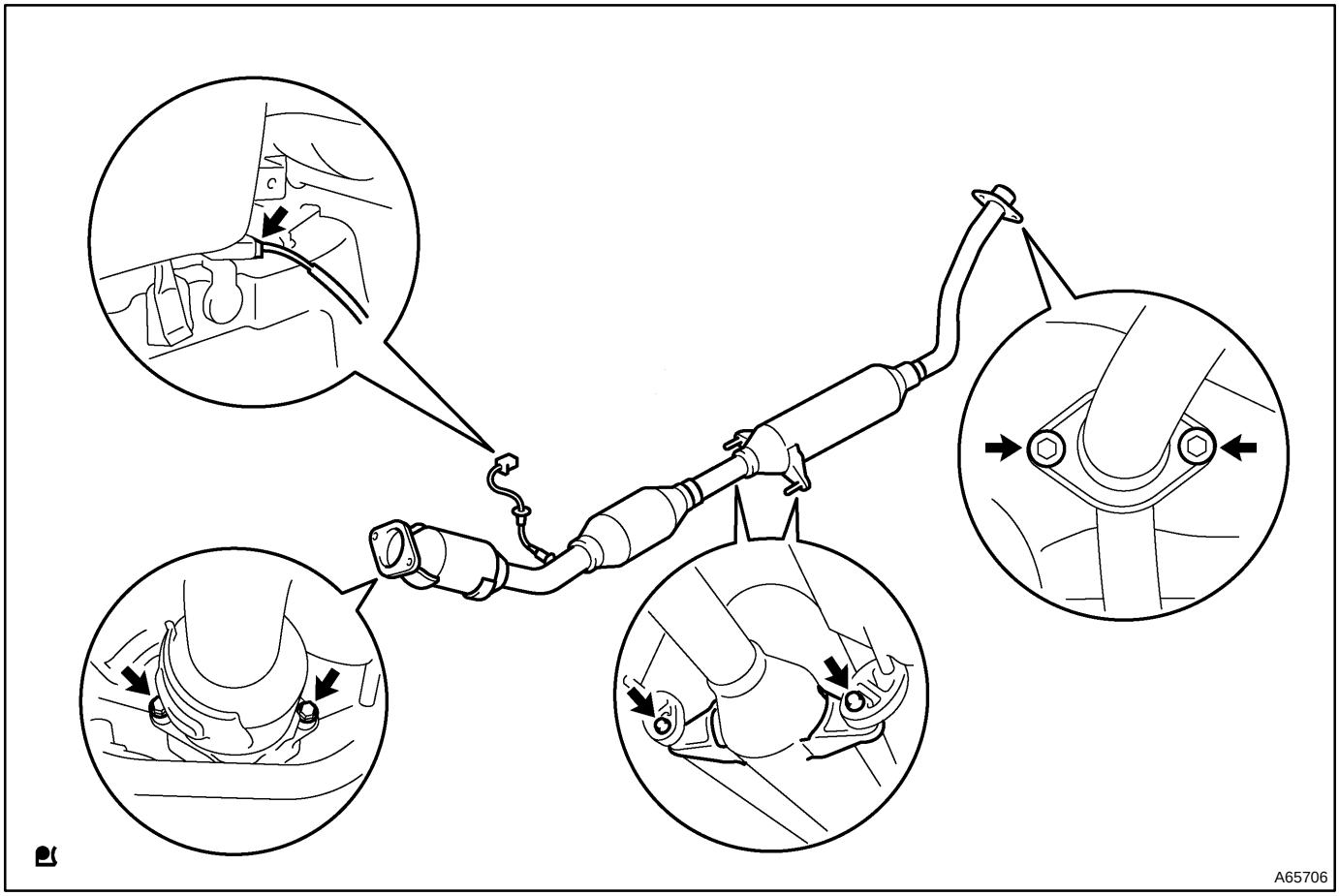

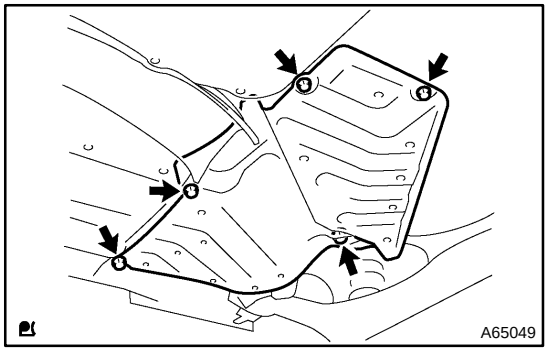

12. REMOVE FUEL TANK PROTECTOR NO.1
(a) Remove the 5 bolts and fuel tank protector.

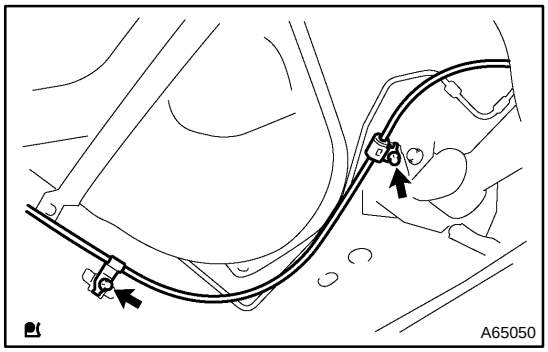

13. SEPARATE PARKING BRAKE CABLE ASSY NO.2
(a) Remove the 2 installing bolts of the parking brake cable.

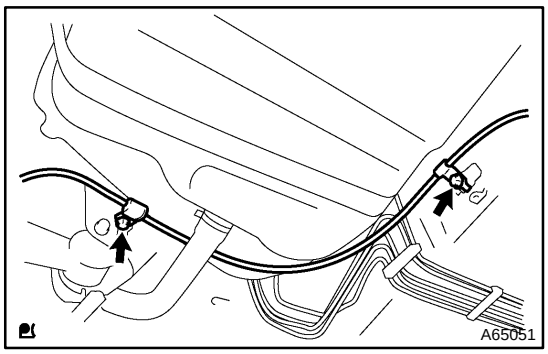

14. SEPARATE PARKING BRAKE CABLE ASSY NO.3

(a) Remove the 2 installing bolts of the parking brake cable.

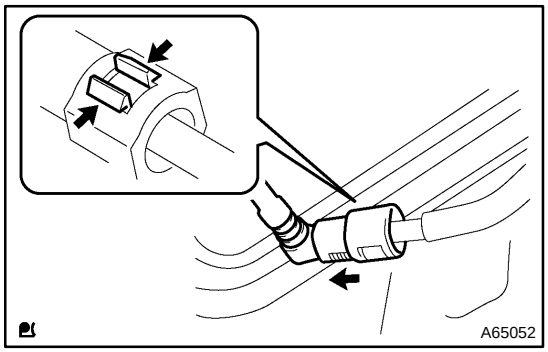

15. DISCONNECT FUEL TANK MAIN TUBE SUB–ASSY

(a) Pinch the fuel tube connector clip, and remove the fuel tube connector clip.

(b) Pull out the fuel tank main tube.

NOTICE:

- **Check if there is any dirt like mud around the fuel tube connector before this work and clean the dirt away.**
- **Be careful of dirt like mud because the fuel tube connector has an O–ring to seal the fuel tube connector and pipe.**
- **Do not use any tool in this work.**
- **Do not bend or twist the nylon tube by force.**
- **After disconnecting, cover the fuel tube connector with a vinyl bag.**
- **When the fuel tube connector and pipe are stuck, pinch the fuel tank main tube between fingers, and turn it carefully to free and then disconnect the fuel tank main tube.**

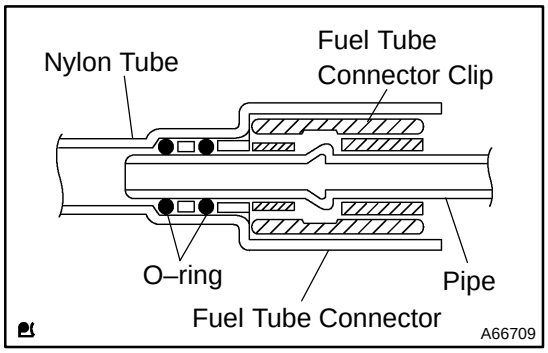

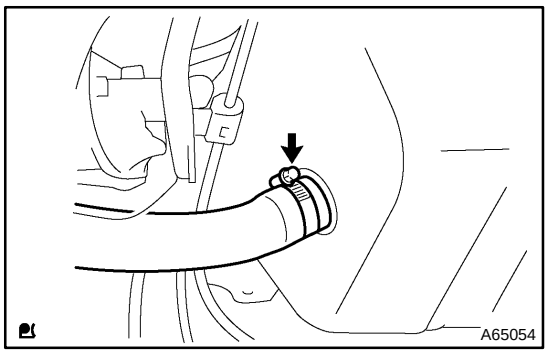

16. DISCONNECT FUEL TANK INLET PIPE FUEL HOSE

(a) Disconnect the fuel tank inlet filler pipe hose from the fuel tank.

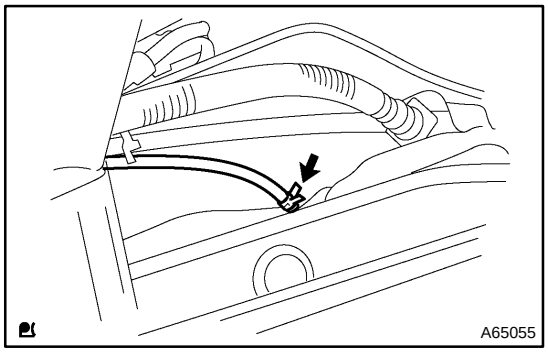

17. DISCONNECT FUEL TANK BREATHER HOSE

(a) Disconnect the fuel tank breather hose from the fuel tank.

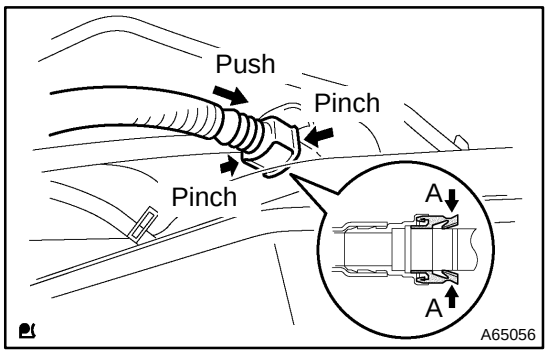

18. DISCONNECT FUEL TANK VENT HOSE

(a) Disconnect the fuel tank bent hose from the charcoal canister.
  (1) Push the connector deep inside.
  (2) Pinch portion A.
  (3) Pull out the connector.

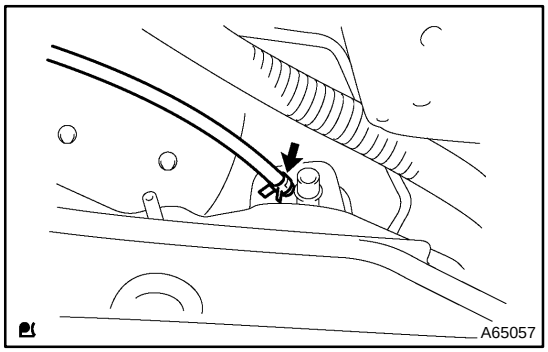

19. DISCONNECT VALVE TO FUEL FILLER PIPE HOSE

(a) Disconnect the valve to fuel filler pipe hose from the fuel tank inlet pipe.

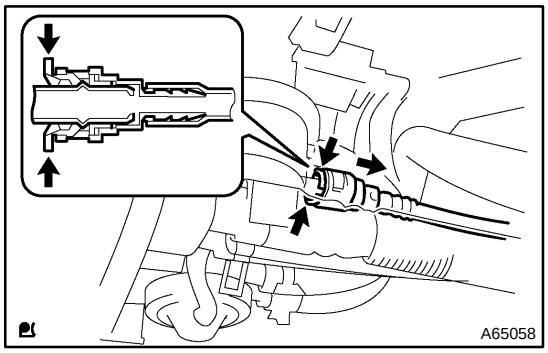

20. DISCONNECT FUEL EMISSION TUBE SUB–ASSY NO.1

(a) Pinch the fuel tube connector clip and then pull out the fuel emission tube.

NOTICE:

- **Check if there is any dirt like mud around the fuel tube connector before this work and clean the dirt away.**
- **Be careful of dirt like mud because the fuel tube connector has an O–ring to seal the fuel tube connector and pipe.**
- **Do not use any tool in this work.**
- **Do not bend or twist the nylon tube by force.**
- **After disconnecting, cover the fuel tube connector with a vinyl bag.**
- **When the fuel tube connector and pipe are stuck, pinch the fuel emission tube between fingers, and turn it carefully to free and then disconnect the fuel emission tube.**

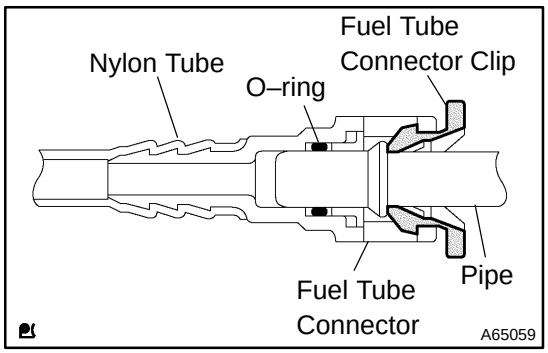

21. REMOVE FUEL TANK ASSY

(a) Set a mission jack to the fuel tank.
(b) Remove the 4 bolts, 2 fuel tank bands and fuel tank.

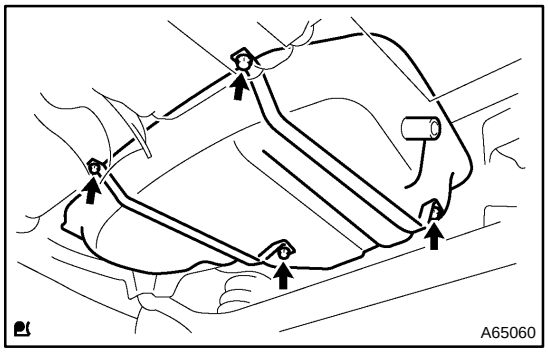

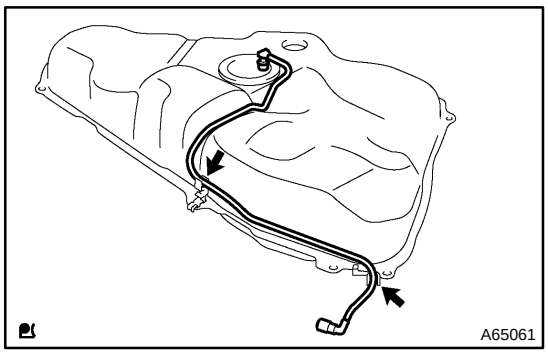

22. REMOVE FUEL TANK MAIN TUBE SUB–ASSY

(a) Remove the fuel tank main tube from the fuel tube clamp and bracket.

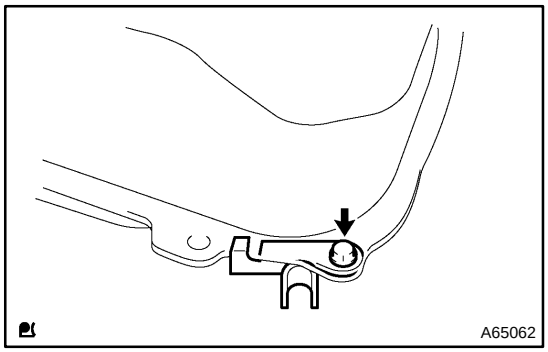

23. REMOVE FUEL TUBE CLAMP NO.4

(a) Remove the bolt and fuel tank clamp.

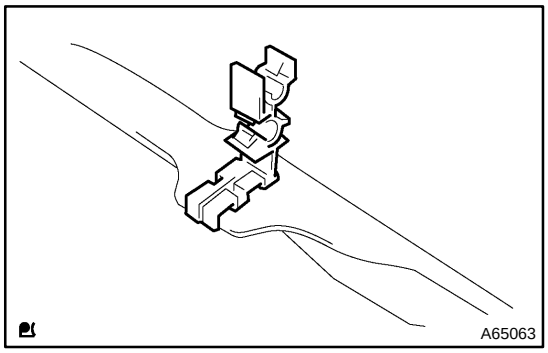

24. REMOVE FUEL TUBE BRACKET

(a) Remove the fuel tube bracket from the fuel tank.

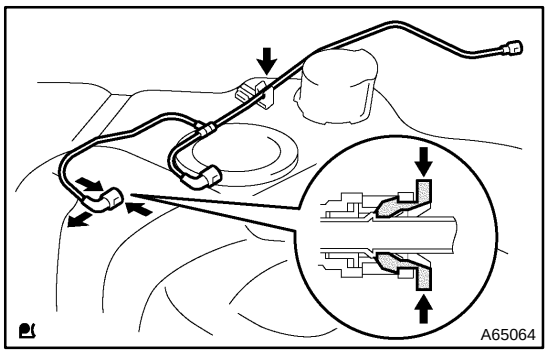

25. REMOVE FUEL EMISSION TUBE SUB–ASSY NO.1

(a) Pinch the fuel tube connector clip and then pull out the fuel emission tube.

NOTICE:

- **Check if there is any dirt like mud around the fuel tube connector before this work and clean the dirt away.**
- **Be careful of dirt like mud because the fuel tube connector has an O–ring to seal the fuel tube connector and pipe.**
- **Do not use any tool in this work.**
- **Do not bend or twist the nylon tube by force.**
- **After disconnecting, cover the fuel tube connector with a vinyl bag.**
- **When the fuel tube connector and pipe are stuck, pinch the fuel emission tube between fingers, and turn it carefully to free and then disconnect the fuel emission tube.**

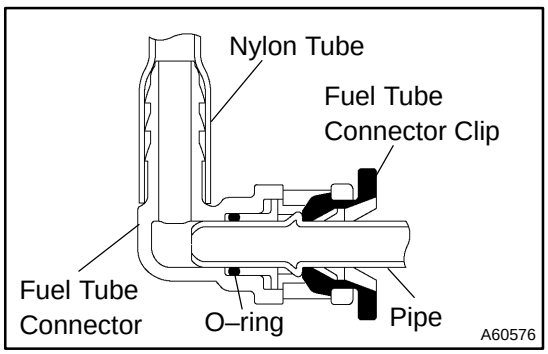

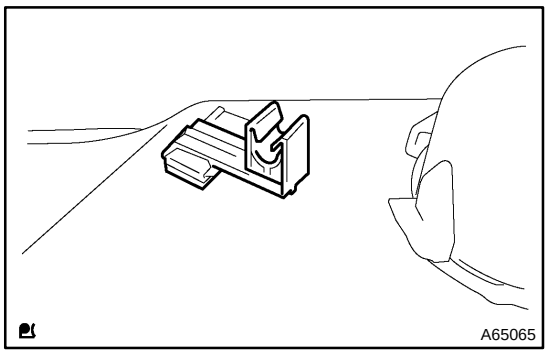

26. REMOVE FUEL TUBE CLAMP NO.2

(a) Remove the fuel tube clamp from the fuel tank.

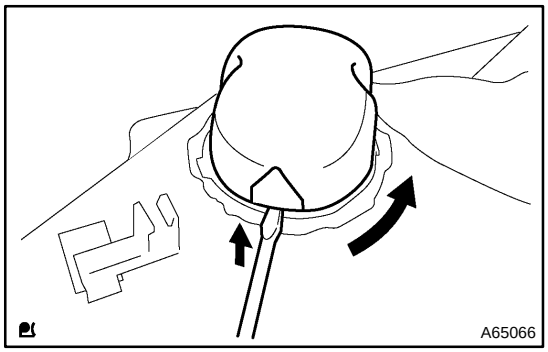

27. REMOVE CHECK VALVE PROTECTOR

(a) Using a screwdriver, unlock the claw, and remove the check valve protector by turning it counter clockwise.

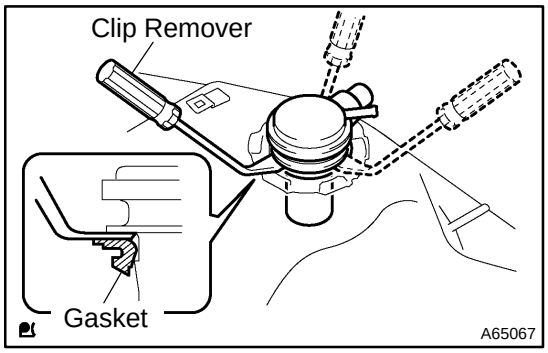

28. REMOVE FUEL TANK INLET VALVE ASSY

(a) Insert a clip remover between the fuel tank inlet valve and gasket, remove the fuel tank inlet valve by gradually pushing it upward.

NOTICE:

- **Work accurately to maintain the sealing performance of the fuel tank inlet valve, since it is made from resin. It is easy to damage by removing and installing forcibly.**
- **Be sure to install a new fuel tank inlet valve and gasket.**

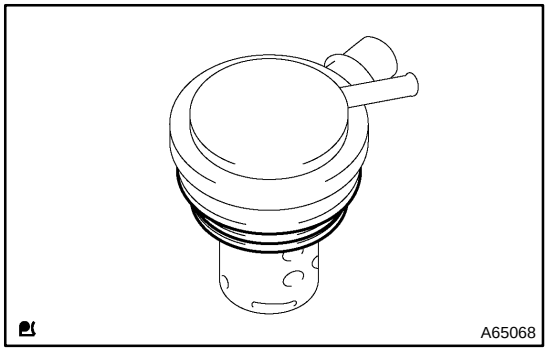

29. REMOVE CHECK VALVE GASKET

(a) Remove the gasket from the fuel tank inlet valve.

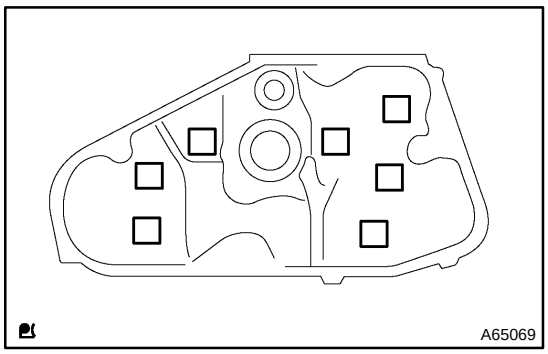

30. REMOVE FUEL TANK CUSHION NO.1

(a) Remove the 7 fuel tank cushions from the fuel tank.

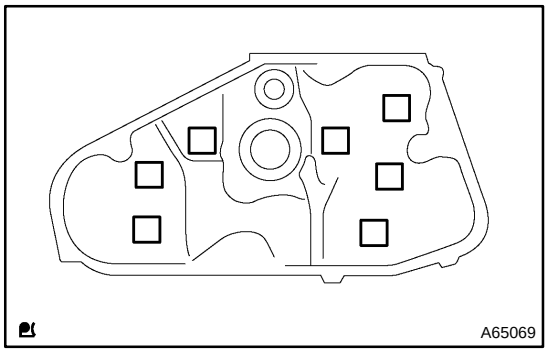

31. INSTALL FUEL TANK CUSHION NO.1

(a) Install the 7 new fuel tank cushions to the fuel tank.

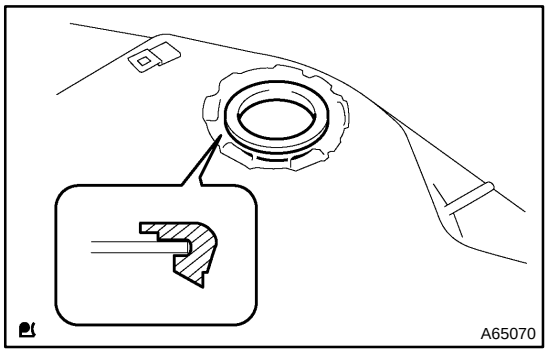

32. INSTALL CHECK VALVE GASKET

(a) Install a new gasket to the fuel tank.

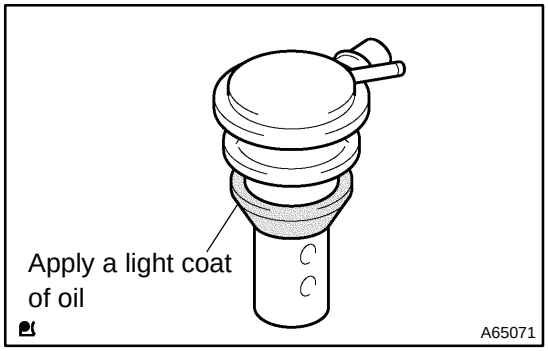

33. INSTALL FUEL TANK INLET VALVE ASSY

(a) Apply a light coat of oil around the fuel tank inlet valve as shown in the illustration, and insert it into the fuel tank without force.

NOTICE:

Be careful not to drop the gasket into the fuel tank.

34. INSTALL FUEL EMISSION TUBE SUB–ASSY NO.1

(a) Push in the fuel tube connector to the pipe until fuel tube connector makes ”click” sound.

NOTICE:

- **Check if there is any damage or foreign objects on the connected part.**
- **After connecting, check if the fuel tube connector and pipe are securely connected by pulling them.**

35. INSTALL FUEL TUBE CLAMP NO.4

(a) Install the fuel tube clamp with the bolt.

Torque: 6.0 N·m (61 kgf·cm, 53 in.·lbf)

36. INSTALL FUEL TANK ASSY

(a) Set a mission jack to the fuel tank.

(b) Install the fuel tank and 2 fuel tank bands with the 4 bolts.
Torque: 39 N·m (400 kgf·cm, 29 ft·lbf)

37. CONNECT FUEL EMISSION TUBE SUB–ASSY NO.1

(a) Push in the fuel tube connector to the pipe until fuel tube connector makes ”click” sound.

NOTICE:

- **Check if there is any damage or foreign objects on the connected part.**
- **After connecting, check if the fuel tube connector and pipe are securely connected by pulling them.**

38. CONNECT FUEL TANK MAIN TUBE SUB–ASSY

(a) Push in the fuel tube connector to pipe until fuel tube connector, and install the fuel tube connector clip.

NOTICE:

- **Check if there is any damage or foreign objects on the connected part.**
- **After connecting, check if the fuel tube connector and pipe are securely connected by pulling them.**

39. INSTALL PARKING BRAKE CABLE ASSY NO.3

(a) Install the parking brake cable with the 2 bolts.
Torque: 5.4 N·m (55 kgf·cm, 48 in.·lbf)

40. INSTALL PARKING BRAKE CABLE ASSY NO.2

(a) Install the parking brake cable with the 2 bolts.
Torque: 5.4 N·m (55 kgf·cm, 48 in.·lbf)

41. INSTALL FUEL TANK PROTECTOR NO.1

(a) Install the fuel tank protector with the 5 bolts.
Torque: 5.4 N·m (55 kgf·cm, 48 in.·lbf)

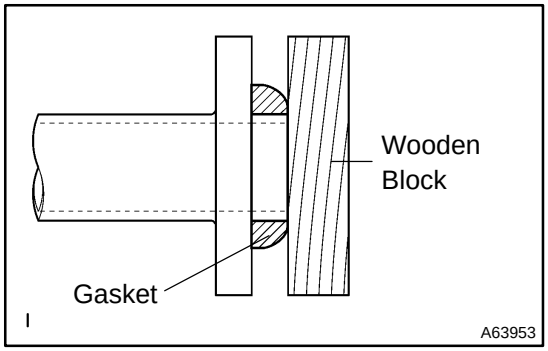

42. INSTALL EXHAUST PIPE ASSY FRONT

(a) Using vernier calipers, measure the free length of the compression spring.
Free length:
Front side 43mm (1.6929 in.)
Rear side 40mm (1.5748 in.)

(b) Using a hammer and wooden block, tap in a new gasket until its surface is flush with the exhaust manifold.

NOTICE:

- **Tap in the gasket in the correct direction.**
- **Do not reuse the removed gasket.**
- **Be sure not to push in the gasket by installing the exhaust pipe.**

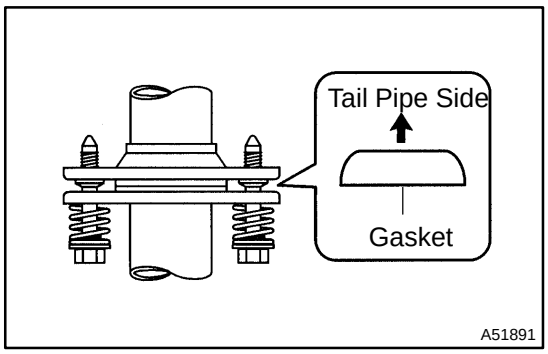

(c) Install a new gasket on the exhaust pipe (rear side).
(d) Install the exhaust pipe with the 4 compression springs and 4 bolts.
Torque: 43 N·m (440 kgf·cm, 32 ft·lbf)
(e) Install the 2 exhaust pipe supports.
(f) Connect the oxygen sensor connector.
(g) Install the font floor carpet with a clip.

43. INSTALL FLOOR PANEL BRACE FRONT
(a) Install the floor panel brace front with the 2 nuts.
Torque: 30 N·m (302 kgf·cm, 22 ft·lbf)
44. INSTALL FUEL SUCTION TUBE SET GASKET (See page 11–16)
45. INSTALL FUEL PUMP ASSEMBLY (See page 11–16)
46. INSTALL FUEL TANK VENT TUBE SET PLATE (See page 11–16)
47. CONNECT FUEL EMISSION TUBE SUB–ASSY NO.1 (See page 11–16)
48. CONNECT FUEL TANK MAIN TUBE SUB–ASSY (See page 11–16)
49. CHECK FUEL LEAK (See page 11–1)
50. CHECK EXHAUST GAS LEAK
51. INSTALL REAR FLOOR SERVICE HOLE COVER (See page 11–16)
52. INSTALL BENCH TYPE REAR SEAT CUSHION ASSY (See page 72–6, 72–8)

INSPECTION

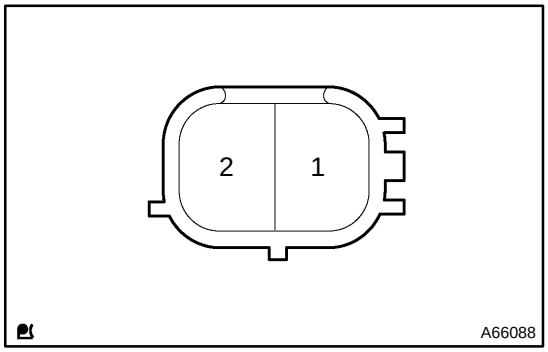

1. FUEL INJECTOR ASSY

(a) Inspect injector resistance.

(1) Using an ohmmeter,measure the resistance between the terminals.

Resistance: 13.4 – 14.2 Ω at 20°C (68°F)

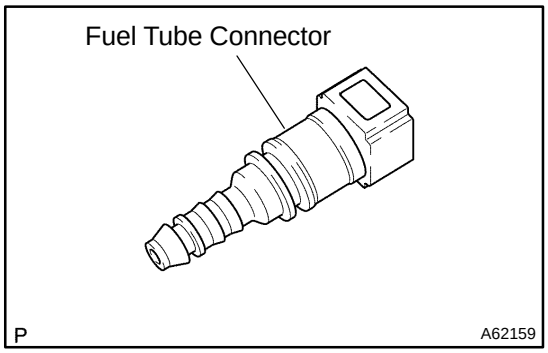

(b) Inspect injector inspection

CAUTION:

Keep injector clear of sparks during the test.

(1) Purchase a new fuel tube, and take out the fuel tube connector from its tube.

HINT:

Part No. 23901–0D010

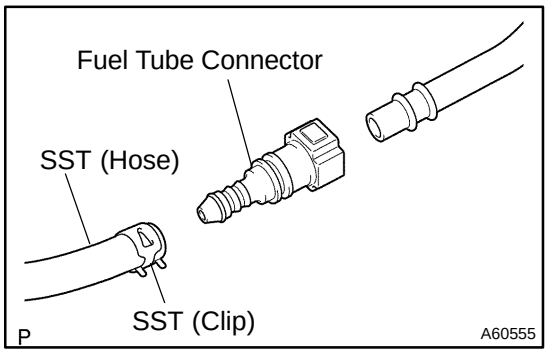

(2) Connect SST and fuel tube connector to the fuel pipe.

SST 09268–41047 (90467–13001, 95336–08070)

CAUTION:

Perform connecting operations of the fuel tube connector (quick type) after observing the precautions.

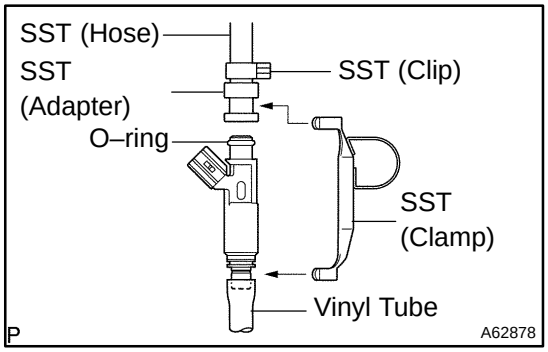

(3) Install an O–ring to the fuel injector.

(4) Connect SST (union and hose) to fuel the injector, and hold the fuel injector to prevent gasoline from splashing out. (See page 11–1)

SST 09268–41047 (90467–13001, 95336–08070, 09268–41110, 09268–41300)

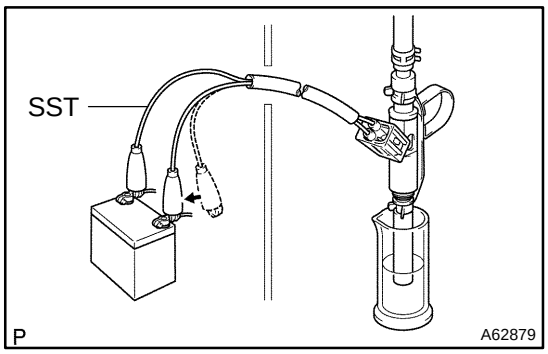

(5) Put the fuel injector into a graduated cylinder.

HINT:

Install a suitable vinyl tube onto the injector to prevent gasoline from splashing out.

(6) Operate the fuel pump.

(7) Connect SST to the connector of fuel injector.

SST 09842–30080

(8) Connect SST to the battery for 15 seconds, and measure the injection volume with a graduated cylinder. Test the each fuel injector 2 or 3 time.

Injection volume:
60 – 73 cm^3 (3.7 – 4.5 cu in.) per 15 seconds
Difference between each injector:
13 cm^3 (0.8 cu in.) or less

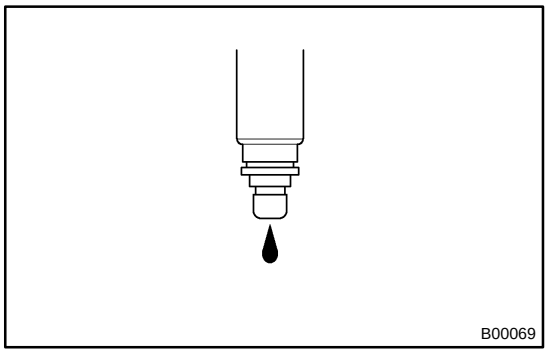

(c) Inspect leakage

(1) In the condition above, disconnect the test probes of the from the battery, and check the fuel leakage from the fuel injector.

Fuel drop: 1 drop or less per 12 minutes

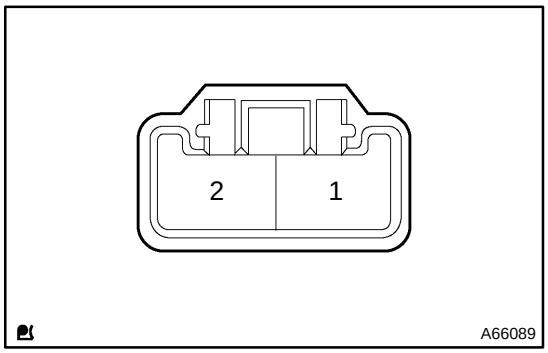

2. FUEL PUMP

(a) Inspect fuel pump resistance.

(1) Using an ohmmeter, measure the resistance between the terminals.

Resistance: 0.2 – 3.0 Ω at 20°C (68°F)

(b) Inspect fuel pump operation

(1) Apply battery voltage to both terminals. Check that the pump operates.

NOTICE:

- **These tests must be done quickly (within 10 seconds) to prevent the coil from burning out.**
- **Keep fuel pump as far away from the battery as possible.**
- **Always do the switching at the battery side.**

ON–VEHICLE INSPECTION

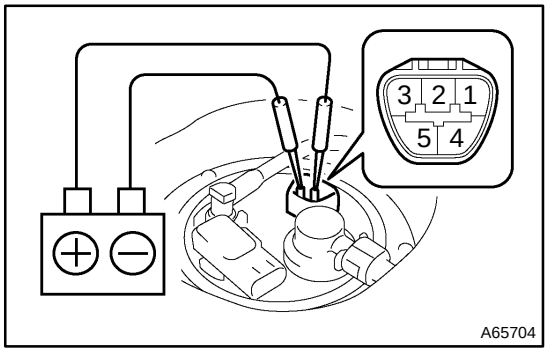

1. CHECK FUEL PUMP OPERATION

(a) Connect the hand–held tester to the DLC3.

(b) Turn the ignition switch ON and hand–held tester main switch ON.

NOTICE:

Do not start the engine.

(c) Select the active test mode on the hand–held tester.

(d) Please refer to the hand–held tester operator's manual for further details.

(e) If you have no hand–held tester, connect the positive (+) lead form the battery to terminal 4 of the connecter, and the negative (–) lead to terminal 5.

NOTICE:

- **These tests must be done quickly (within 10 seconds) to prevent the coil burning out.**
- **Keep the fuel pump as far away from the battery as possible.**
- **Always do the switching at the battery side.**

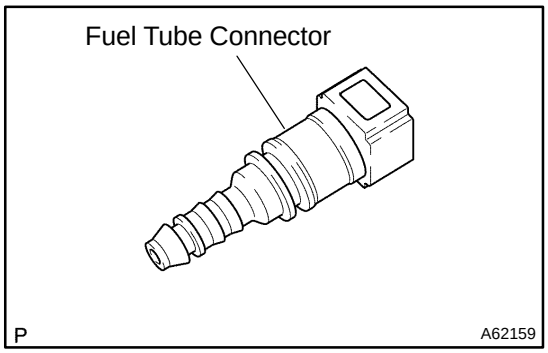

2. CHECK FUEL PRESSURE

(a) Prepare for inspection.

(1) Purchase a new fuel tube, and take out the fuel tube connector from its tube.

HINT:

Part No. 23901–0D010

(b) Work for prevent gasoline from spilling out. (See page 11–1)

(c) Disconnect the EFI fuel pipe clamp. (See page 11–1)

(d) Disconnect the fuel tube from the fuel main tube. (See page 11–1)

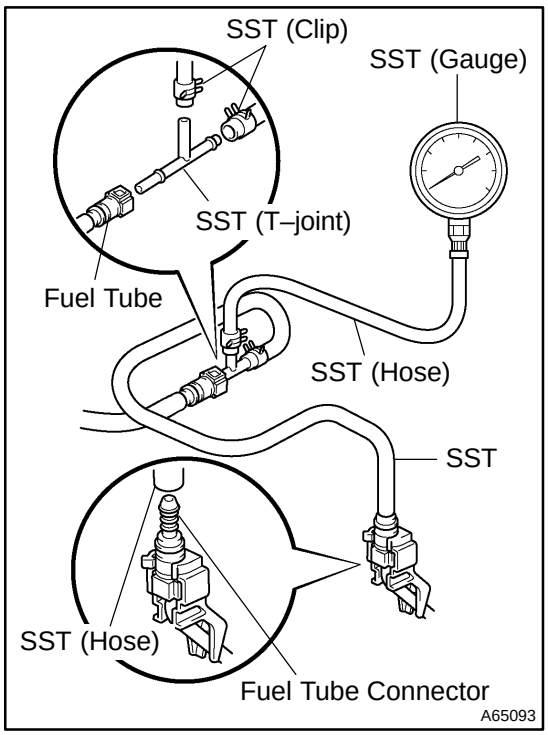

(e) Install SST (pressure gauge) as shown in the illustration by using the SST and fuel tube connector.
SST 09268–41047 (90467–13001, 95336–08070), 09268–45014 (09268–41200, 09268–41220, 09268–41250, 90467–13001)

(f) Wipe off any splattered gasoline.

(g) Start the engine.

(h) Measure the fuel pressure at idle.
Fuel pressure:
304 – 343 kPa (3.1 – 3.5 kgf·cm^2, 44 – 50 psi)

(i) Stop the engine.

(j) Check that the fuel pressure remains as specified for 5 minutes after the engine has stopped.
Fuel pressure:
147 kPa (1.5 kgf·cm^2, 21 psi) or more

If pressure is not as specified, check the fuel pump, pressure regulator and/or injectors.

(k) After checking fuel pressure, disconnect the negative (–) terminal cable from the battery and carefully, remove the SST and fuel tube connector to prevent gasoline from the splashing.

(l) Reconnect the fuel tube to fuel main tube.

(m) Install the EFI fuel pipe clamp.

(n) Check fuel leak. (See page 11–1)

FUEL SYSTEM

110FF–01

PRECAUTION

1. **BEFORE WORKING ON FUEL SYSTEM, DISCONNECT NEGATIVE (–) TERMINAL CABLE FROM BATTERY**
2. **DO NOT SMOKE OR WORK NEAR AN OPEN FLAME WHEN WORKING ON FUEL SYSTEM**
3. **KEEP GASOLINE AWAY FROM RUBBER OR LEATHER PARTS**

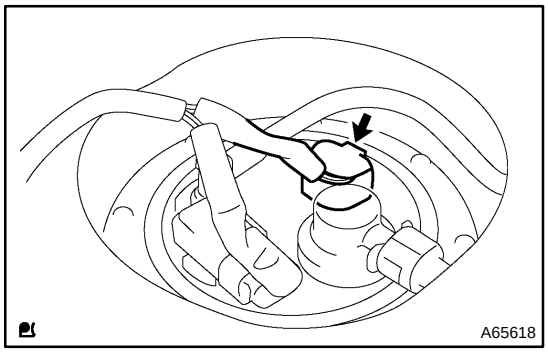

4. WORK FOR PREVENT GASOLINE FROM SPILLING OUT

(a) Remove the rear seat cushion.
(See page 72–6, 72–8)
(b) Remove rear floor service hole cover.
(See page 11–16)
(c) Disconnect the fuel pump connector.
(d) Start the engine. After the engine has stopped on its own, turn the ignition switch to lock.
(e) Disconnect negative (–) terminal cable from battery.
(f) Connect the fuel pump connector.
(g) Install rear floor service hole cover. (See page 11–16)
(h) Install the rear seat cushion.
(See page 72–6, 72–8)

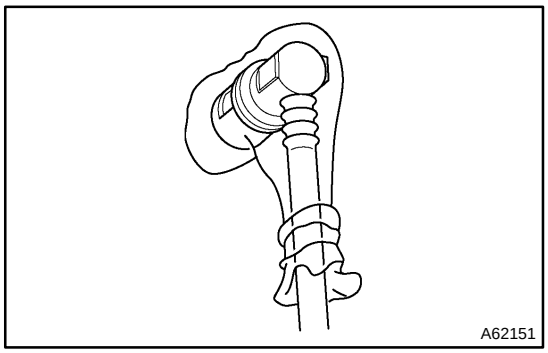

5. FUEL SYSTEM

(a) When disconnecting the high fuel pressure line, a large amount of gasoline will spill out, so observe these procedures.
  (1) Work for prevent gasoline from spilling out.
  (2) Disconnect the fuel tank main tube.
  (3) Drain the fuel remained inside the fuel tank main tube.
  (4) Protect the disconnected fuel tank main tube from damage and foreign material by covering it with a vinyl bag.

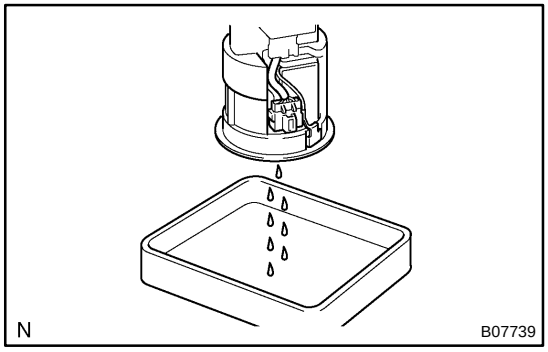

  (5) Put a container under the connection.

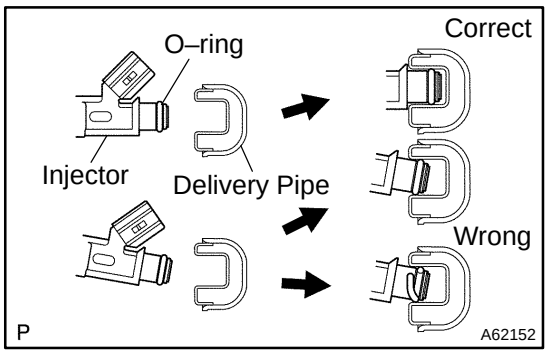

(b) Observe these precautions when removing and installing the fuel injector.
(1) Never reuse an O–ring.
(2) When placing a new O–ring on the fuel injector, take care not to damage it in any way.
(3) Coat a new O–ring with spindle oil or gasoline before installing.

NOTICE:
Never use engine, gear or brake oil.

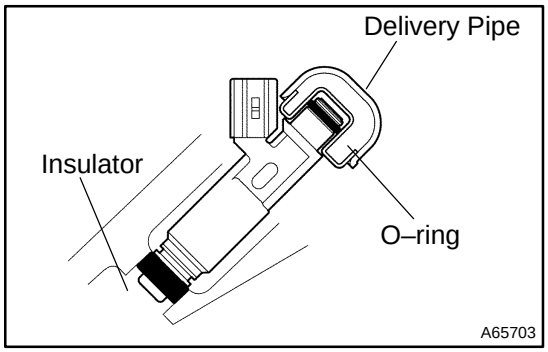

(c) Install the fuel injector to the fuel delivery pipe and cylinder head, as shown in the illustration. Before installing the fuel injector, be sure to apply spindle oil or gasoline on the place where the fuel delivery pipe touches an O–ring of the fuel injector.

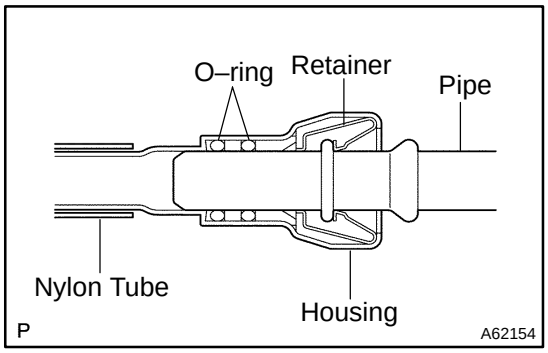

(d) Observe these precautions when disconnecting the fuel delivery pipe.

HINT:
The structure of the metallic connector is shown as illustration.

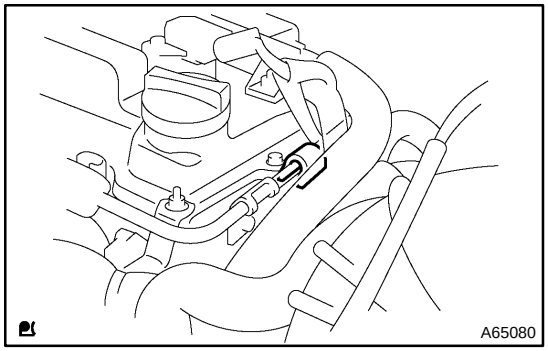

(1) Remove the EFI fuel pipe clamp.
(2) Get the metallic connector of the fuel tube assembly, pull it out towards the rear and hold it as it is.

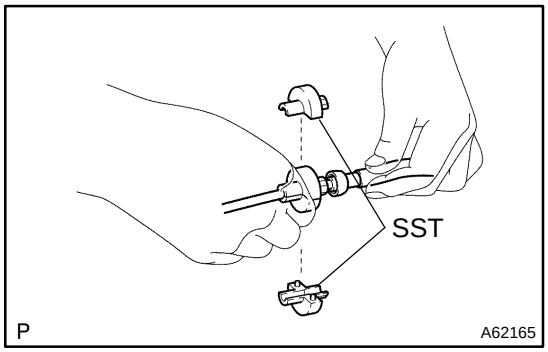

(3) Assemble SST to the connection as shown.
SST 09268–21010

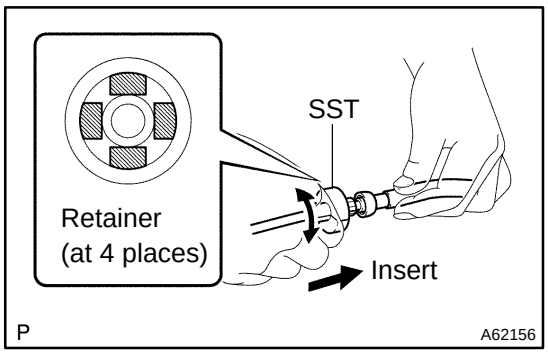

(4) Turn SST, align the retainers inside the connector with SST chamfered parts and insert SST into the connector.
(5) Slide SST and the connector together towards the fuel tube assembly.

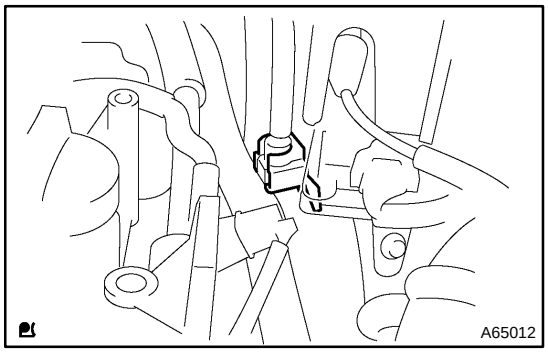

(e) Observe these precautions when disconnecting the fuel tube connector (quick type).
(1) Remove the EFI fuel pipe clamp.
(2) Check if there is any dirt like mud on the pipe and around the connector before disconnecting them and clean the dirt away.

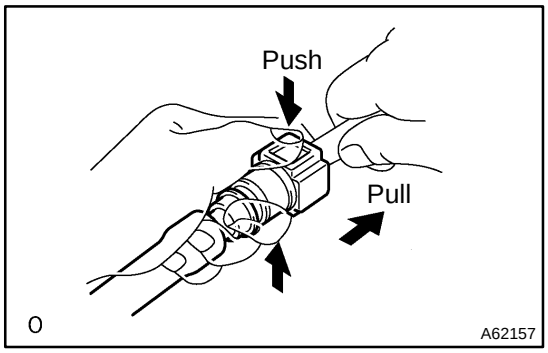

(3) Be sure to disconnect with hands.
(4) When the connector and the pipe are stuck, pinch the retainer between the hands, push and pull the connector to free to disconnect and pull it out.

NOTICE:
Do not use any tool at this time.

(5) Inspect if there is any dirt or the likes on the seal surface of the disconnected pipe and clean it away.

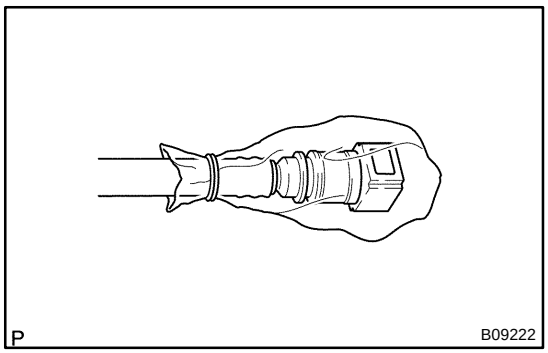

(6) Prevent the disconnected pipe and connector from damaging and mixing foreign objects by covering them with a vinyl bag.

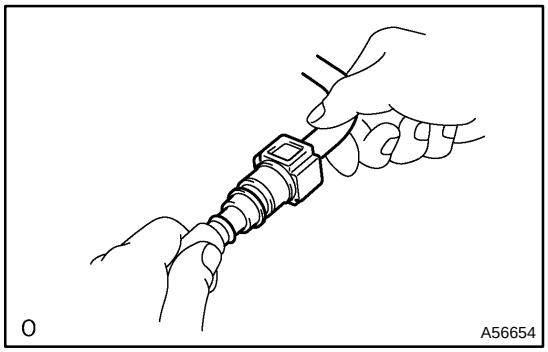

(f) Observe these precautions when connecting the fuel tube connector (quick type).
(1) Match the axis of the connector with axis of the pipe, and push in the connector until retainer makes a ”click” sound. In case that the connections is tight, apply little amount of new engine oil on the tip of the pipe.
(2) After having finished the connection, check if the pipe and the connector are securely connected by pulling them.

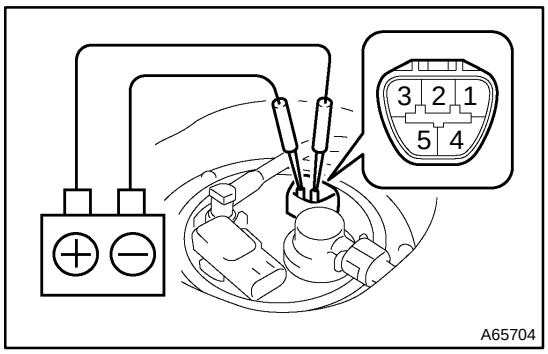

6. CHECK FUEL LEAK

(a) Check that there are no fuel leaks after doing maintenance anywhere on the fuel system.
  (1) Connect the hand–held tester to the DLC3.
  (2) Turn the ignition switch ON and hand–held tester main switch ON.
  (3) Select the active test mode on the hand–held tester.
  (4) Please refer to the hand–held tester operator's manual for further details.
  (5) If you have no hand–held tester, connect the positive (+) and negative (–) leads from the battery to the fuel pump connector.
  (6) Check that there are no leaks from any part of the fuel system.
  (7) Turn the ignition switch to LOCK.
  (8) Disconnect the hand–held tester from the DLC3.

INSPECTION

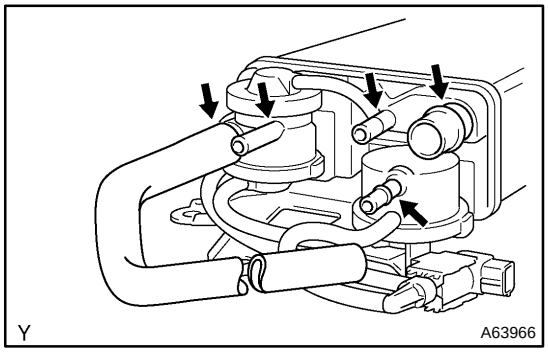

1. CHARCOAL CANISTER ASSY

(a) Visually check the charcoal canister for cracks or damage.

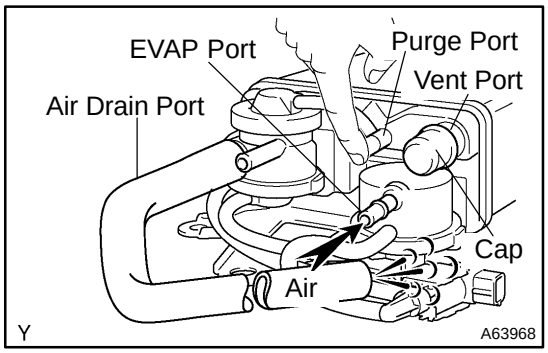

(b) Inspect the charcoal canister operation.

(1) Plug the vent port with the cap.

(2) While holding the purge port closed, blow air (1.76 kPa, 18 gf/cm^2, 0.26 psi) into the EVAP port and check that air flows from the air drain port.

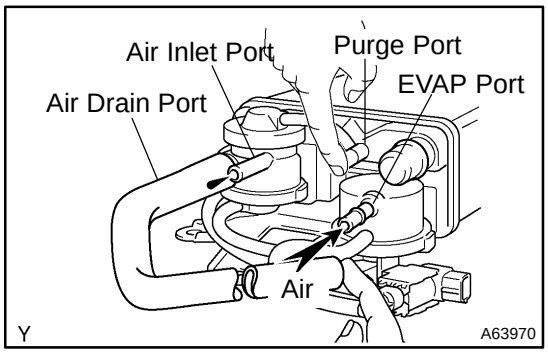

(3) While holding the purge port and the air drain port closed, blow air (1.76 kPa, 18 gf/cm^2, 0.26 psi) into the EVAP port and check that air does not flow from the air inlet port.

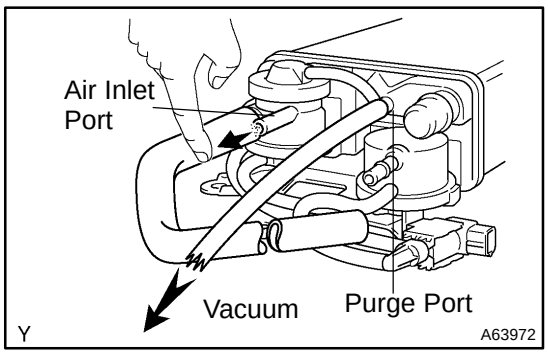

(4) Apply vaccum (3.43 kPa, 25.7 mmHg, 1.01 in.Hg) to the purge port, check that the vacuum dose not decrease when the air inlet port is closed, and check that the vacuum decreases when the air inlet port is released.

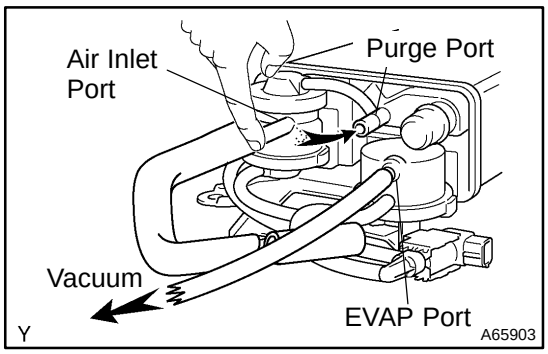

(5) While holding the air inlet port closed, apply vacuum (3.43 kPa, 25.7 mmHg, 1.01 in.Hg) to the EVAP port and check that air flows into the purge port.

If operation is not as spacified, replace the charcoal canister.

(6) Remove the hose and cap from vent port.

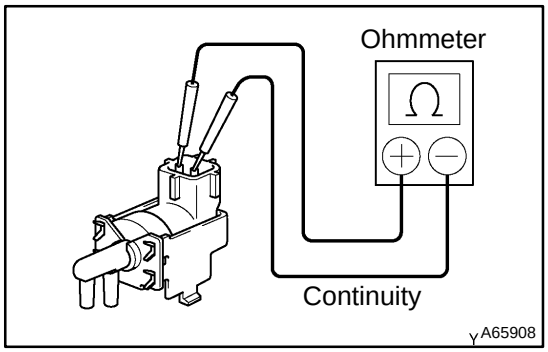

(c) Inspect VSV for Pressure Swiching Valve

(1) Using an ohmmeter, check that there is continuity between the terminals.

Resistance: 37 – 44 Ω at 20°C (68°F)

If there is no continuity, replace the VSV.

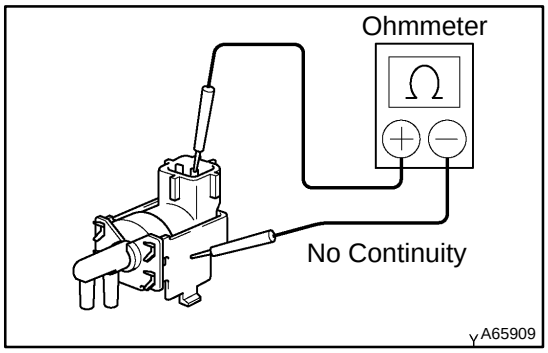

(2) Using an ohmmeter, check that there is no continuity between each terminal and the body.

If there is continuity, replace the VSV.

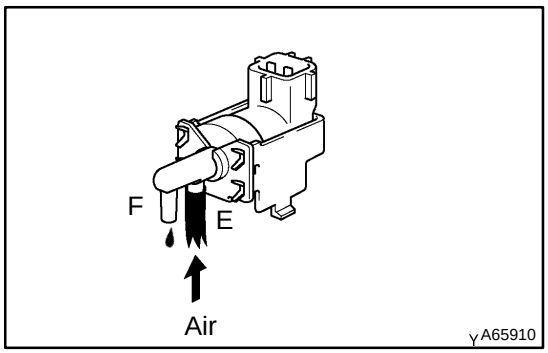

(3) Check that air does not flow from ports E to F.

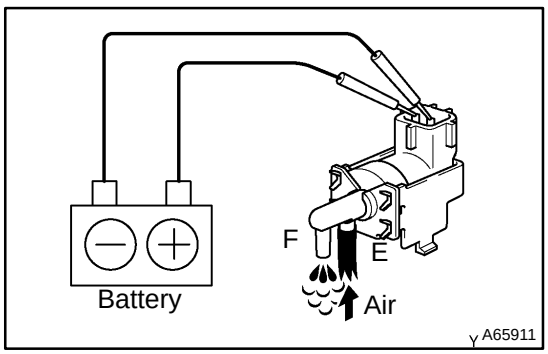

(4) Apply battery positive voltage across the terminals.

(5) Check that air flows from ports E to F.

If operation is not as specified, replace the VSV.

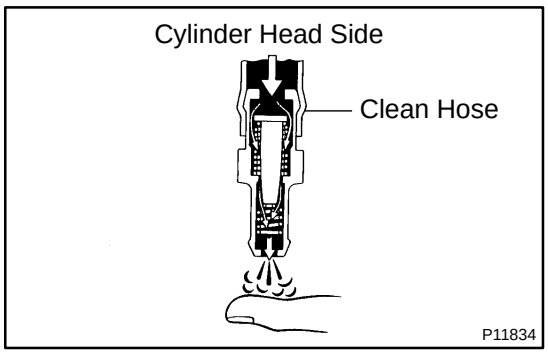

2. VENTILATION VALVE SUB–ASSY

(a) Install clean hose to the PCV valve.

(b) Inspect the PCV valve operation.

(1) Blow air into the cylinder head side, and check that air passes through easily.

CAUTION:

Do not suck air through the valve. Petroleum substances inside the valve air harmful.

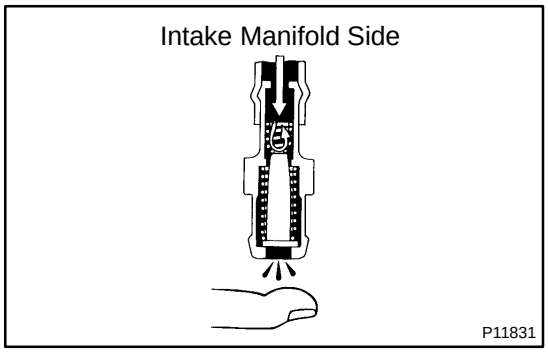

(2) Blow air into the intake manifold side, and check that air passes through with difficulty.

If operation is not as specified, replace the PCV valve.

(c) Remove clean hose from the PCV valve.

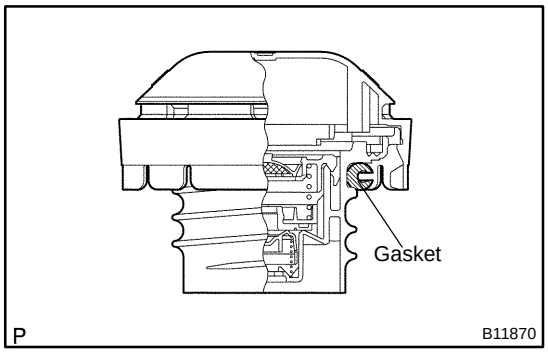

3. FUEL TANK CAP ASSY

(a) Visually check if cap and/or gasket are deformed or damaged.

If necessary, repair or replace the cap.

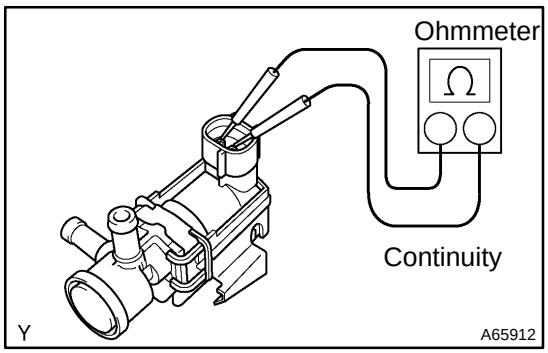

4. VACUUM SWITCHING VALVE NO.1

(a) Inspect VSV for evaporative emission (EVAP).

(1) Using an ohmmeter, check that there is continuity between the terminals.

Resistance: 27 – 33 Ω at 20°C (68°F)

If there is no continuity, replace the VSV.

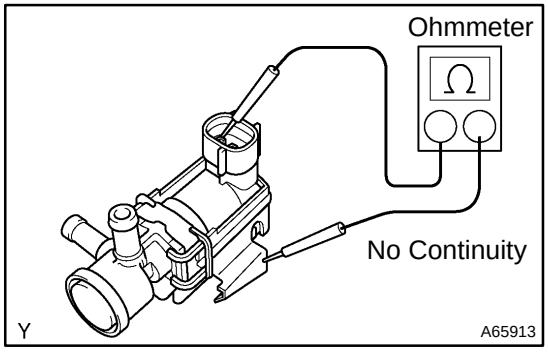

(2) Using an ohmmeter, check that there is no continuity between each terminal and the body.

If there is continuity, replace the VSV.

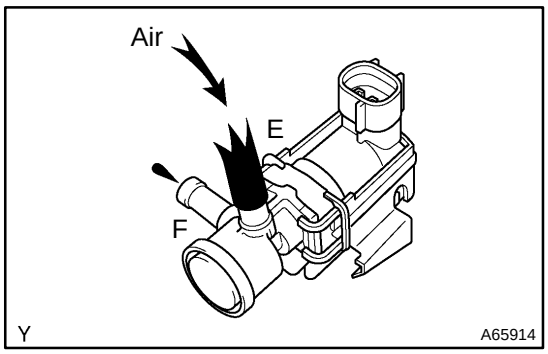

(3) Check that air flows from ports E to F.

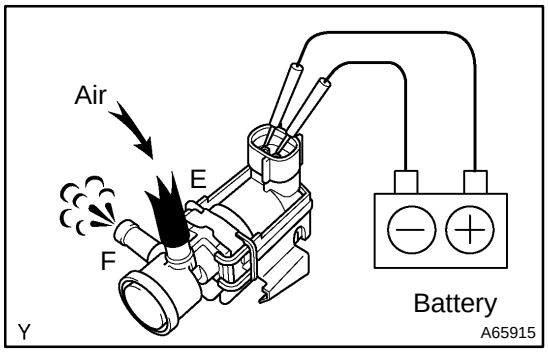

(4) Apply battery positive voltage across the terminals.
(5) Check that air does not flow from ports E to F.

If operation is not as specified, replace the VSV.

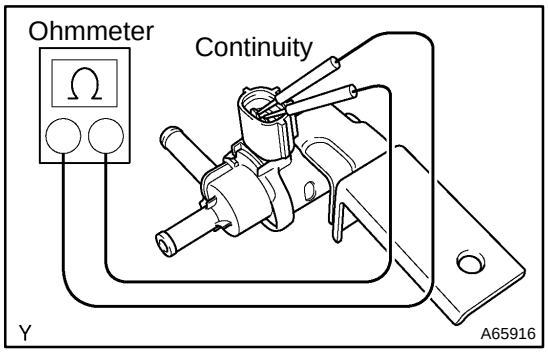

5. VACUUM SWITCHING VALVE ASSY NO.1

(a) Inspect VSV for Canister Closed valve (CCV).
(1) Using an ohmmeter, check that there is continuity between the terminals.

Resistance: 25 – 30 Ω at 20°C (68°F)

If there is no continuity, replace the VSV.

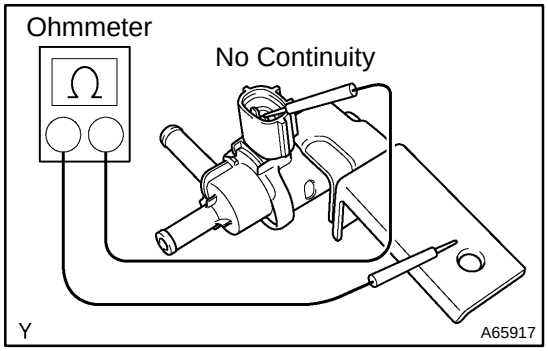

(2) Using an ohmmeter, check that there is no continuity between each terminal and the body.

If there is continuity, replace the VSV.

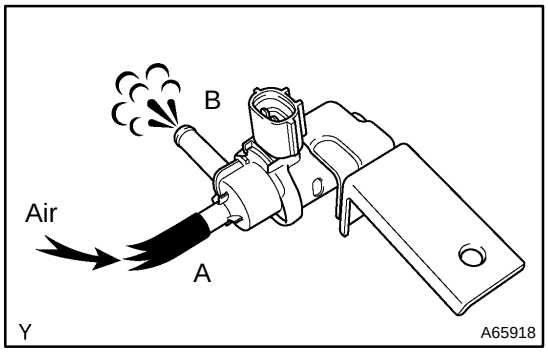

(3) Check that air flows from ports A to B.

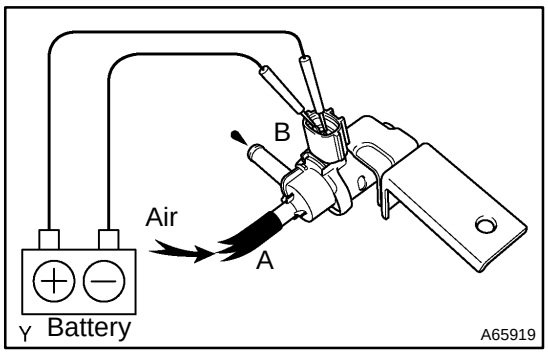

(4) Apply battery positive voltage across the terminals.
(5) Check that air does not flow from ports A to B.

If operation is not as specified, replace the VSV.

EMISSION CONTROL SYSTEM

1204D–01

ON–VEHICLE INSPECTION

1. INSPECT AIR–FUEL RATIO COMPENSATION SYSTEM

HINT:

You can also check the system by choosing ”DATA MONITOR”, then ”O_2 SENSOR OUTPUT VOLTAGE” on the monitor of the hand–held tester.

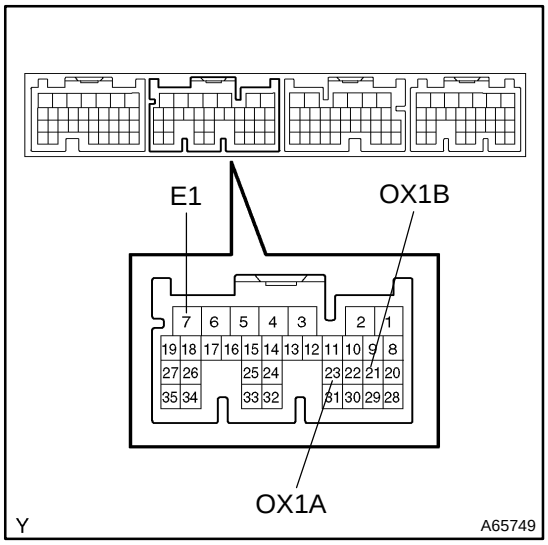

(a) Connect the hand–held tester to the terminal 23 (OX1A) ⇔ 7 (E1) and 21 (OX1B) ⇔ 7 (E1) of the ECM.

CAUTION:

Connect test leads from the back side of the connector with the ECU connected.

(b) Warm up the oxygen sensor with the engine speed at 2,500 rpm for approx. 2 minutes.

(c) Confirm that the voltage changes between 0V to 1V with the engine speed at 2,500 rpm.

OK:

The voltage changes more than 8 times in 10 seconds.

CAUTION:

- **Perform the check immediately after the end of the warming up.**
- **If not confirming the change of voltage, warming up the oxygen sensor again.**

2. INSPECT FUEL CUT OFF RPM

(a) Increase the engine speed to at least 3,500 rpm.

(b) Use a sound scope to check for injector operating noise.

(c) Check that when the throttle lever is released, injector operation noise stops momentarily and then resumes.

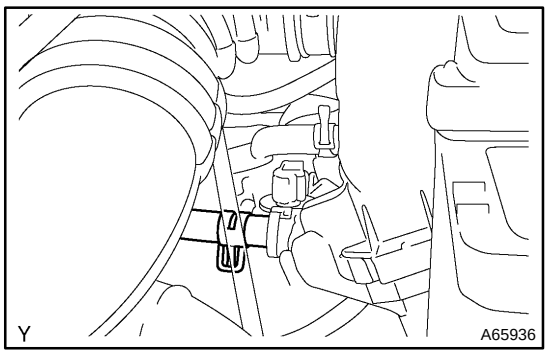

3. INSPECT EVAPORATIVE EMISSION CONTROL SYSTEM

(a) After starting the engine, disconnect the vacuum hose shown in the illustration.

(b) Confirm vacuum occurs at the vsv port, when choosing ”ACTIVE TEST” and ”PURGE VSV” according to the display on hand–held tester.

(c) Finish ”ACTIVE TEST”, then connect the vacuum hose again.

(d) After going to ”ECM DATA MONITOR” on the hand–held tester, choose ”PURGE VSV” to check the operation of the purge VSV.

(e) After warm up the engine and drive the vehicle, confirm the VSV turns on from off.

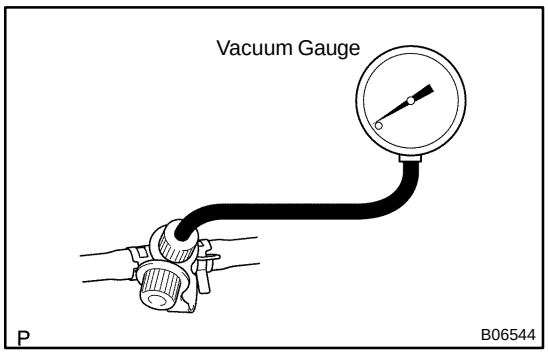

4. INSPECT EVAP SYSTEM LINE

(a) Warm up the engine and stop the engine. Allow the engine to warm up to normal operating temperature.

(b) Install a vacuum gauge (EVAP control system test equipment vacuum gauge) to the EVAP service port on the purge line.

(c) TOYOTA Hand–Held Tester:
Forced driving of the VSV for the EVAP.
(1) Connect a TOYOTA hand–held tester to the DLC3
(2) Start the engine.
(3) Push the TOYOTA hand–held tester main switch ON.
(4) Use the ACTIVE TEST mode on the TOYOTA hand–held tester to operate the VSV for the EVAP.

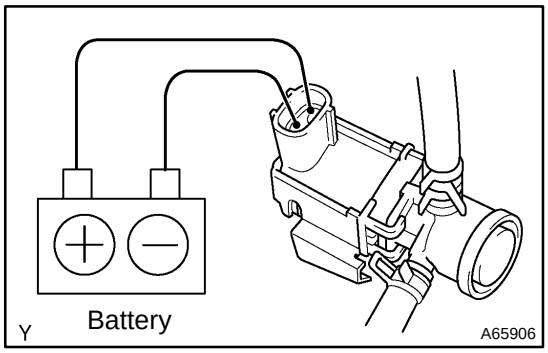

(d) If you have no TOYOTA Hand–Held Tester:
Forced driving of the VSV for the EVAP.
(1) Disconnect the VSV connector for the EVAP.
(2) Connect the positive (+) and negative (–) leads from the battery to the VSV terminals for the EVAP.
(3) Start the engine.

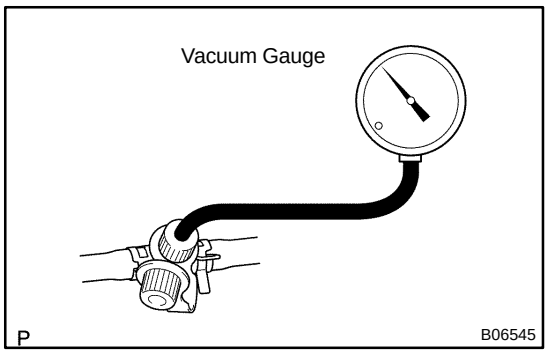

(e) Check the vacuum at idle
Vacuum:
Maintain at 0.368 – 19.713 in.Hg (5 –268 in.Aq) for over 5 seconds.

HINT:
If the vacuum does not change, you can conclude that the hose connecting the VSV to the service port has come loose or is blocked, or the VSV is malfunctioning.

(f) TOYOTA Hand–Held Tester:
Conclude forced driving of the VSV for the EVAP.
(1) Stop the engine.
(2) Disconnect the TOYOTA hand–held tester from the DLC3.

(g) If you have no TOYOTA Hand–Held tester:
Conclude forced driving of the VSV for the EVAP.
(1) Stop the engine.

(2) Disconnect the positive (+) and negative (–) leads from the battery from the VSV terminals for the EVAP.

(3) Connect the VSV connector for the EVAP.

(h) Disconnect the vacuum gauge from the EVAP service port on the purge line.

(i) Connect a pressure gauge to the EVAP service port on the purge line.

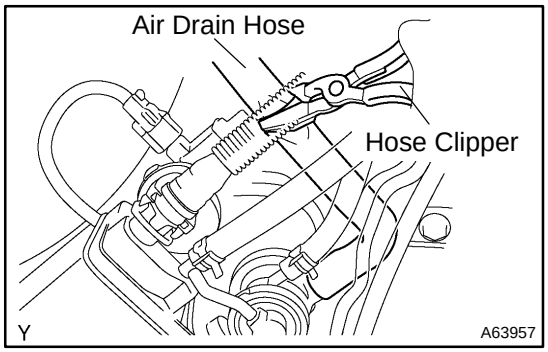

(j) Check the pressure.

(1) Close off the air drain hose at the marked position of the canister with a hose clipper or similar instrument.

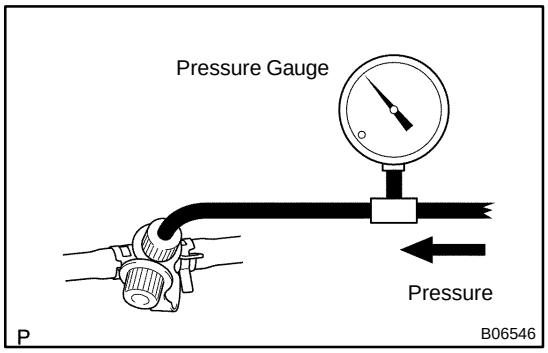

(2) Add the pressure (13.5 – 15.5 in. Aq) from the EVAP service port.

Pressure:

2 minutes after the the pressure is added, the gauge should be over 7.7–8.8 in.Aq.

HINT:

If you can not add pressure, you can conclude that the hose connecting the VSV – canister – fuel tank has slipped off or the VSV is open.

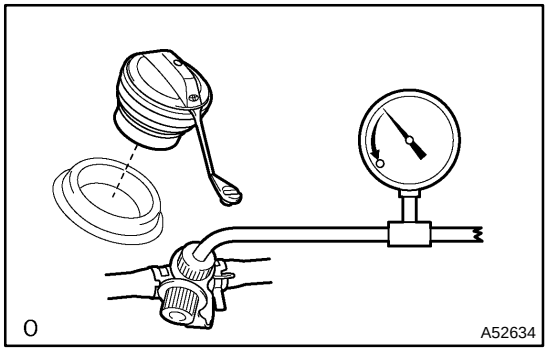

(3) Check if the pressure decreases when the fuel tank cap is removed while adding pressure.

HINT:

If the pressure dose not decrease when the filler cap is removed, then you can conclude that the hose connecting the service port to the fuel tank is blocked, etc.

(k) Disconnect the pressure gauge from the EVAP service port on the purge line.

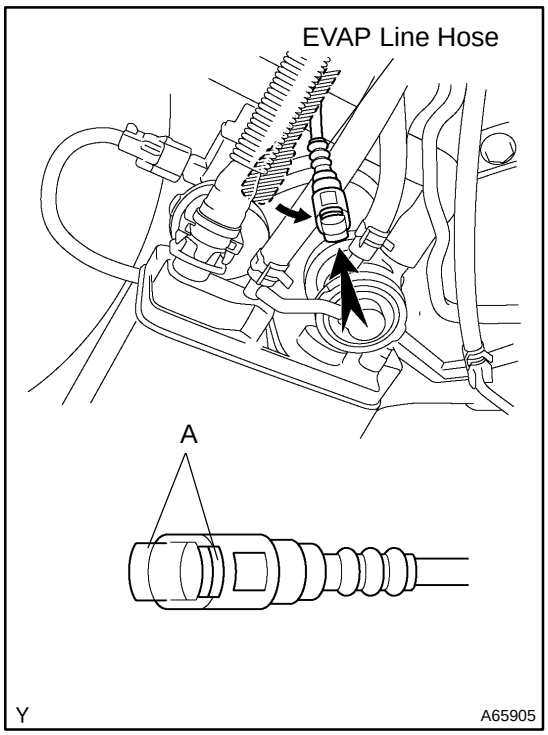

5. CHECK AIRTIGHTNESS IN FUEL TANK AND FILLER PIPE

(a) Disconnect the EVAP line hose from the charcoal canister.
  (1) Pinch portion A.
  (2) Pull out the connector.
(b) Pressurize and make the internal pressure in the fuel tank 4 kPa (41 gf/cm^2, 0.58 psi).
(c) Check that the internal pressure of the fuel tank can be hold for 1 minute.
(d) Check the connected portions of each hose and pipe.
(e) Check the installed parts on the fuel tank.

If there is no abnormality, replace the fuel tank and filler pipe.

(f) Reconnect the EVAP line hose to the charcoal canister.

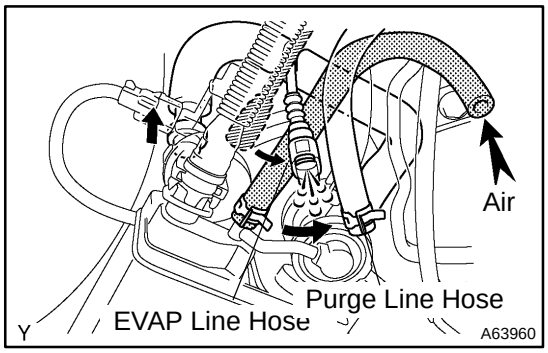

6. INSPECT FUEL CUT OFF VALVE AND FILL CHECK VALVE

(a) Disconnect the purge line hose and EVAP line hose from the charcoal canister.
(b) Plug the cap to the air drain hose.
(c) Pressurize 4 kPa (41 gf/cm^2, 0.58 psi) to the purge port and check that there is ventilation through the EVAP line hose.

HINT:

In the condition that the fuel is full, as the float value of the fill check valve is closed and has no ventilation, it is necessary to check the fuel amount (volume).

(d) Check if there is anything struck in the vent line hose and EVAP line hose.

If there is no stuck in hoses, replace the fuel cut off valve and fill check valve.

(e) Reconnect the purge line hose and EVAP line hose to the charcoal canister.

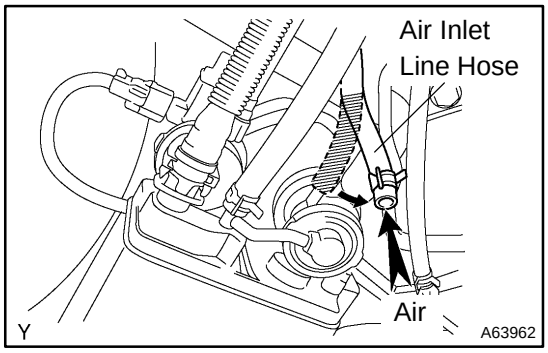

7. CHECK AIR INLET LINE

(a) Disconnect the air inlet line hose from the charcoal canister.
(b) Check that there is ventilation in the air inlet line.
(c) Reconnect the air inlet line hose to the charcoal canister.

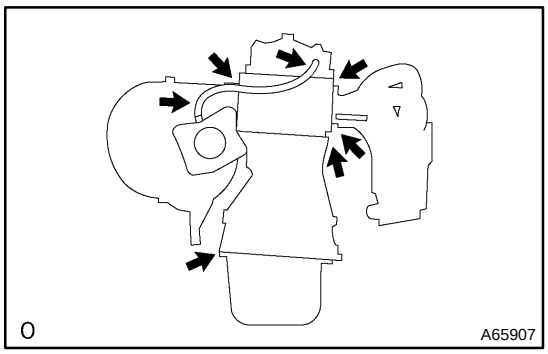

8. VISUALLY INSPECT HOSES, CONNECTIONS AND GASKETS

(a) Check for cracks, leaks or damage.

HINT:

Separation of the engine oil dipstick, oil filler cap, PCV hose, etc. may cause the engine to run out of turn. Disconnection, looseness or cracks in the parts of the air induction system between the throttle body and cylinder head will allow air suction and cause the engine to run out of turn.

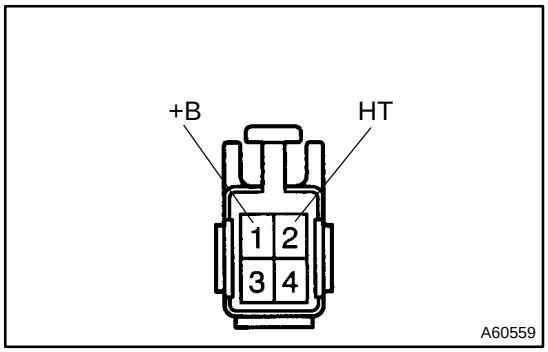

9. INSPECT HEATER RESISTANCE OF HEATED OXYGEN SENSOR

(a) Disconnect the oxygen sensor connector.

(b) Using an ohmmeter, measure the resistance between the terminals HT and +B.

Resistance: 11 – 16 Ω at 20°C (68°F)

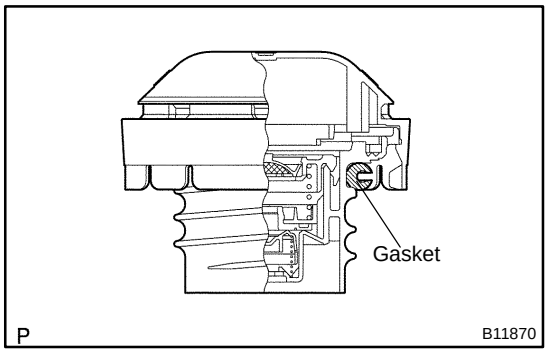

10. INSPECT FUEL TANK CAP

(a) Visually check if the cap and/or gasket are deformed or damaged.

CAMSHAFT

COMPONENTS

140OI–01

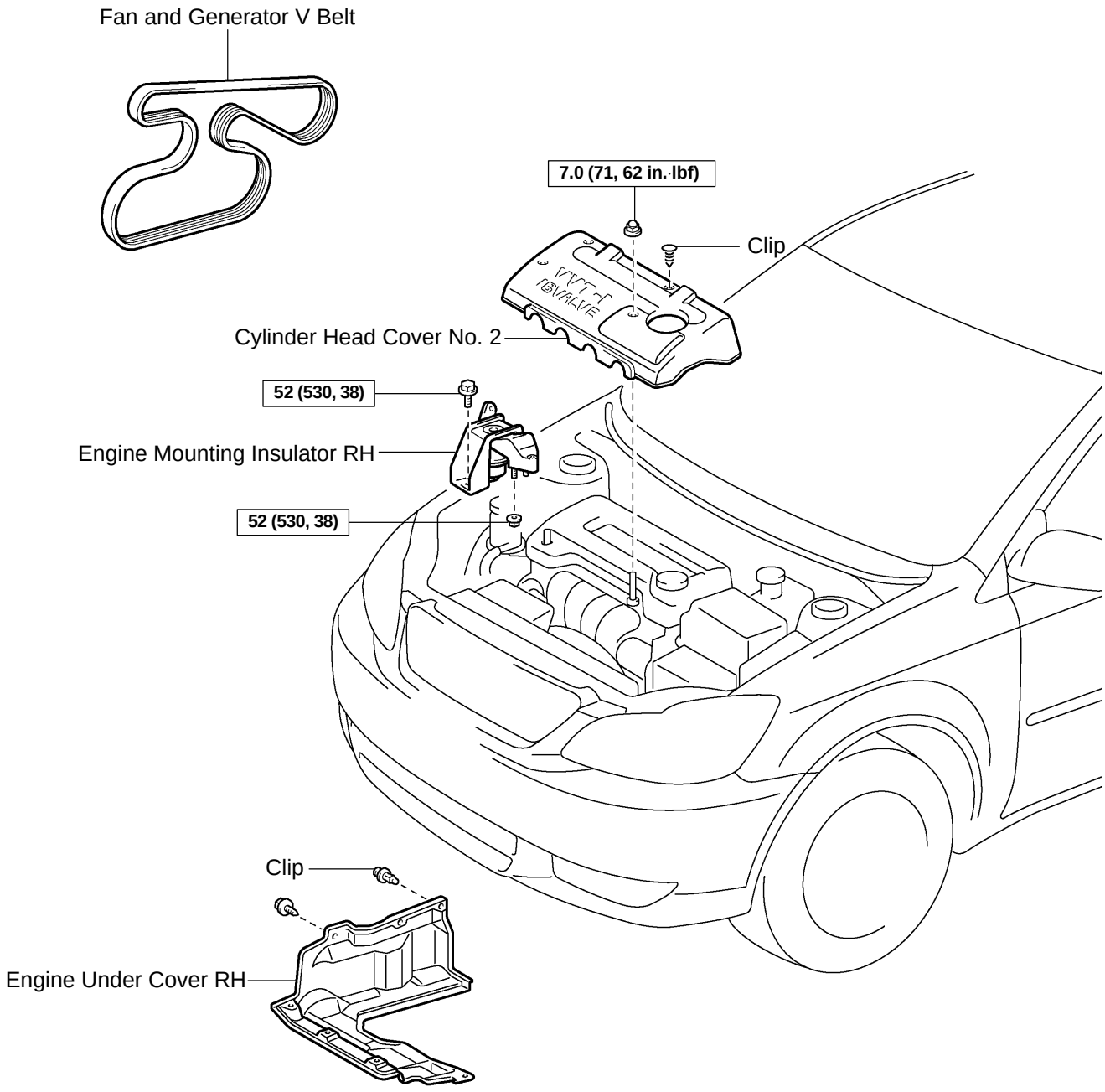

o N·m (kgf·cm, ft·lbf) : Specified torque

A64044

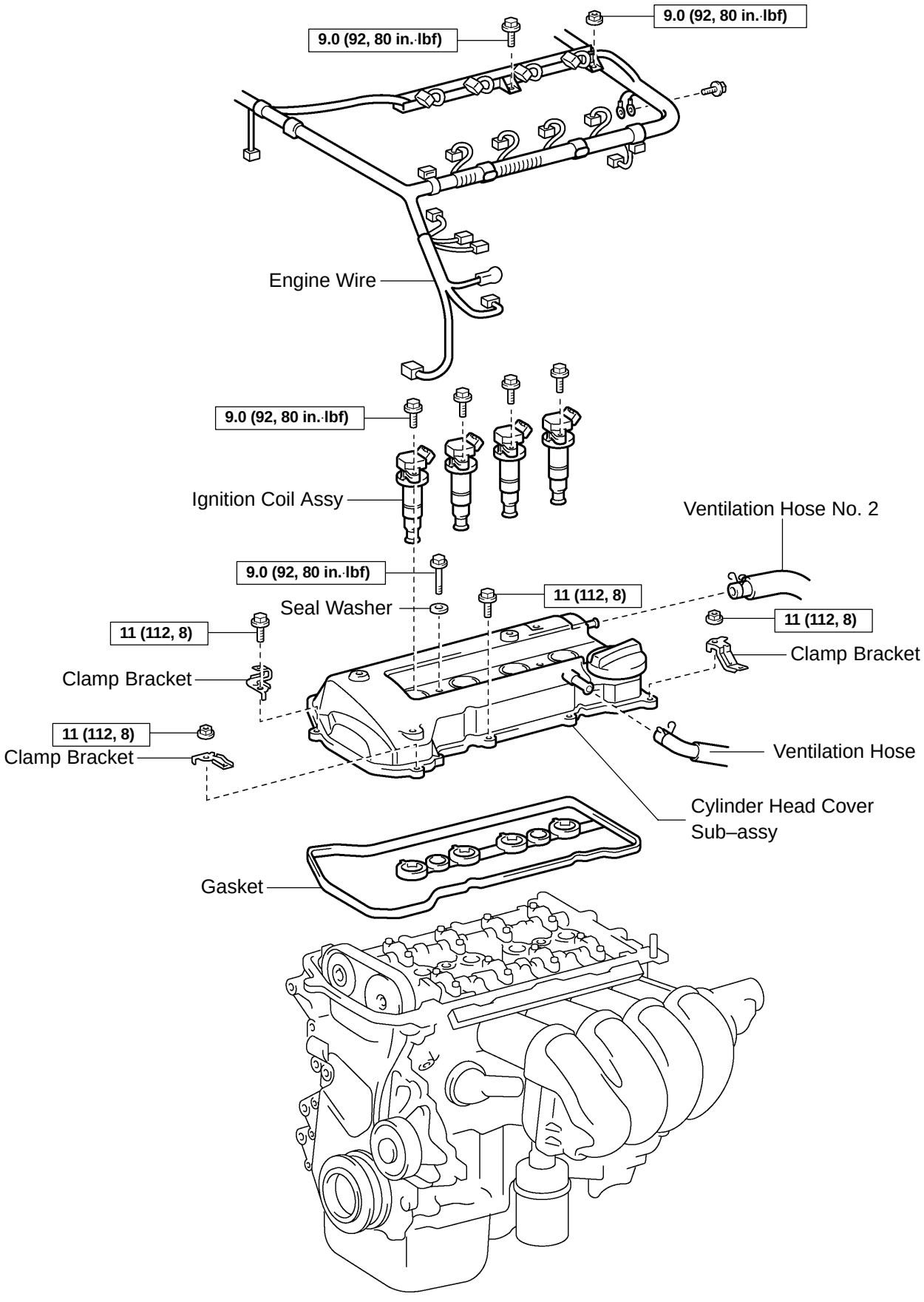
9.0 (92, 80 in.·lbf)
9.0 (92, 80 in.·lbf)
Engine Wire
9.0 (92, 80 in.·lbf)
Ignition Coil Assy
Ventilation Hose No. 2
9.0 (92, 80 in.·lbf)
Seal Washer
11 (112, 8)
11 (112, 8)
11 (112, 8)
Clamp Bracket
Clamp Bracket
11 (112, 8)
Clamp Bracket
Ventilation Hose
Cylinder Head Cover Sub–assy
Gasket
O
N·m (kgf·cm, ft·lbf) : Specified torque
A64043

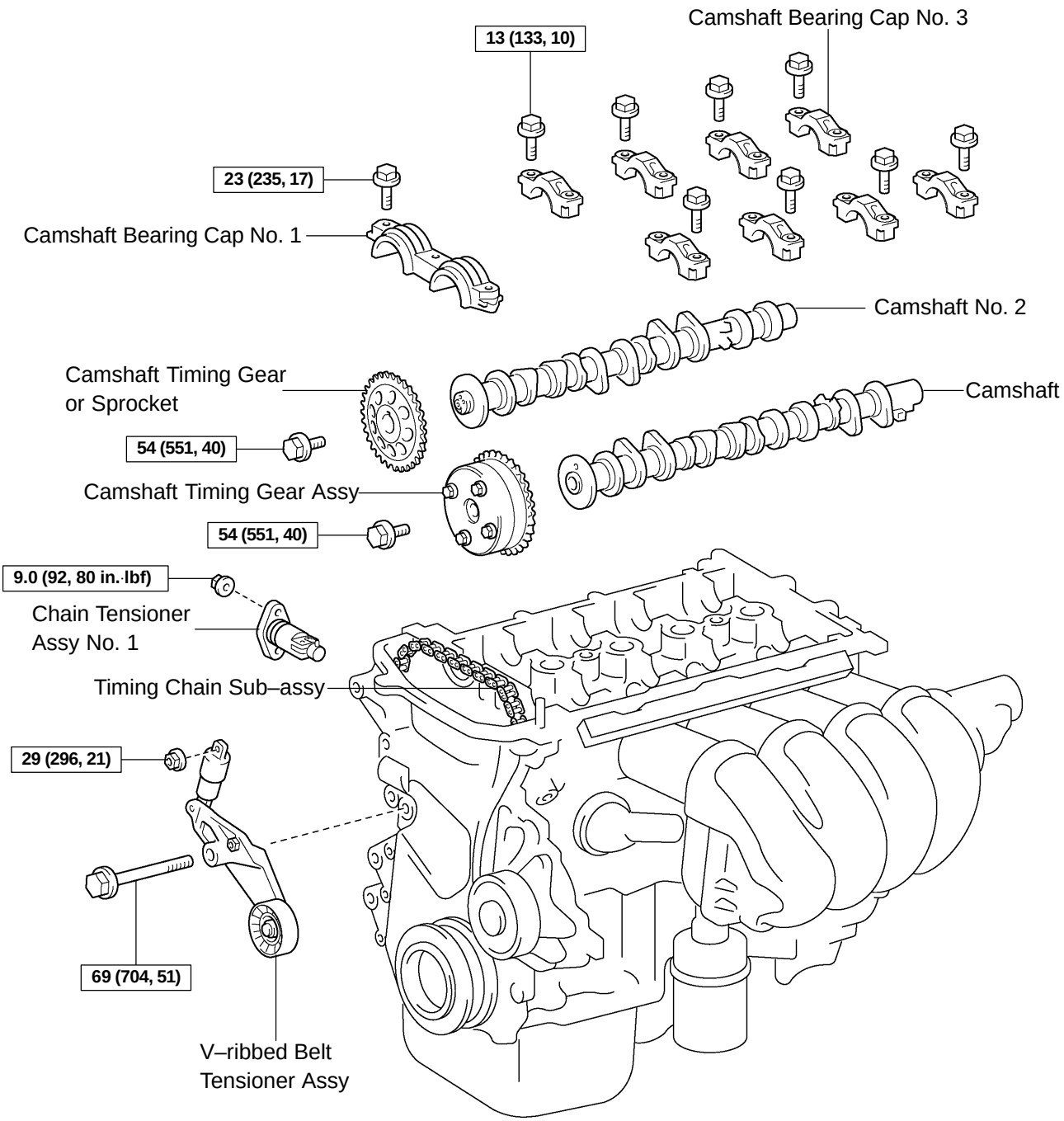

N·m (kgf·cm, ft·lbf) : Specified torque

A64006

140OJ–01

REPLACEMENT

1. REMOVE ENGINE UNDER COVER RH

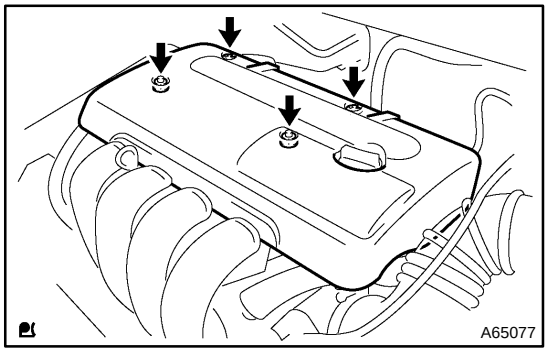

2. REMOVE CYLINDER HEAD COVER NO.2

(a) Remove the 2 screw, 3 clips and engine under cover.

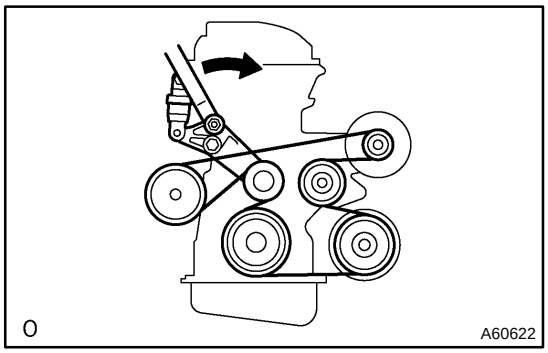

3. REMOVE FAN AND GENERATOR V BELT

(a) Turn the V–ribbed belt tensioner slowly clockwise and loosen it. Then, remove the fan and generator V belt and put back the V–ribbed belt tensioner little by little and fix it quietly.

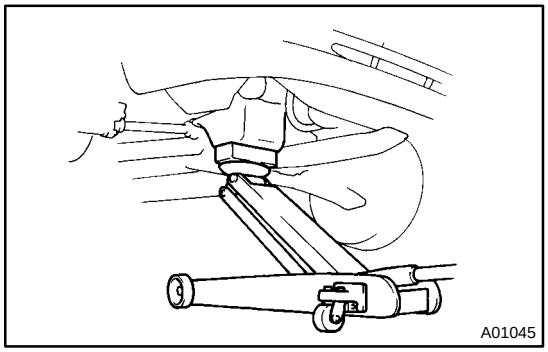

4. REMOVE ENGINE MOUNTING INSULATOR SUB–ASSY RH

(a) Remove the PS oil pump reservoir and put it aside.

(b) Place a wooden block between the jack and engine, and set the jack, then remove the 4 bolts, the 2 nuts and engine mounting insulator RH.

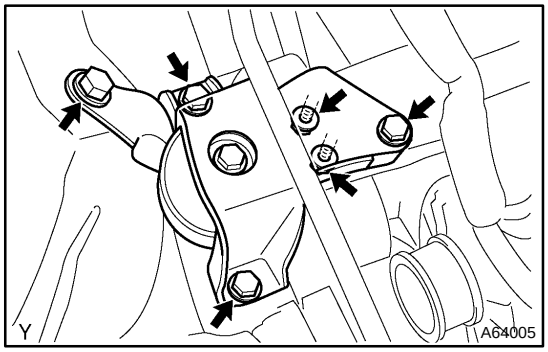

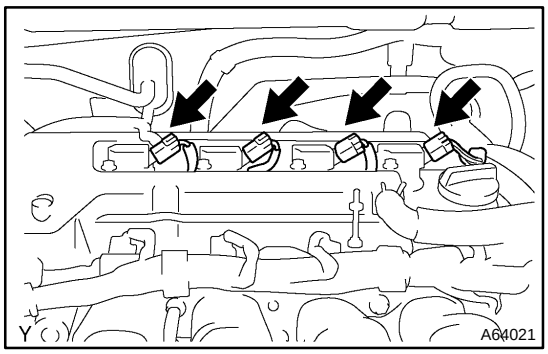

5. DISCONNECT ENGINE WIRE

(a) Remove the 5 clamps from the 5 clamp brackets.

(b) Disconnect the 4 ignition coil connectors.

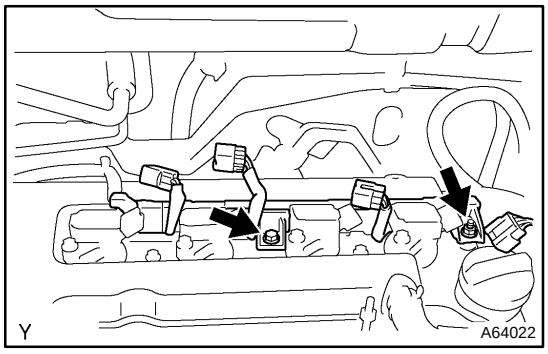

(c) Remove the bolt and nut installing the engine wire.

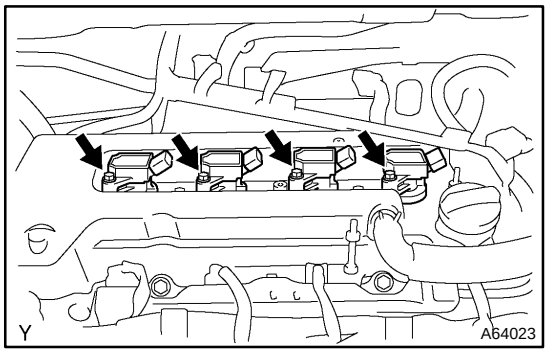

6. REMOVE IGNITION COIL ASSY

(a) Remove the 4 bolts and 4 ignition coils.

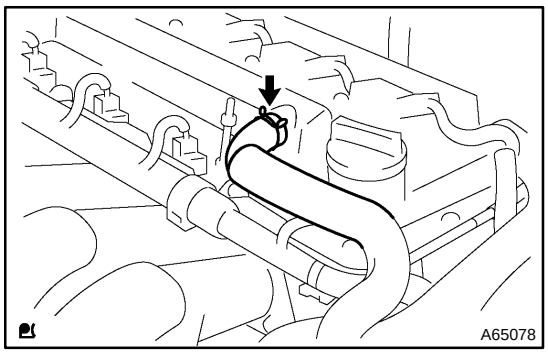

7. DISCONNECT VENTILATION HOSE

(a) Disconnect the ventilation hose from the cylinder head cover.

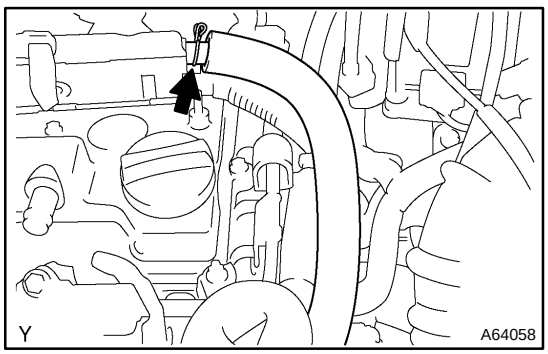

8. DISCONNECT VENTILATION HOSE NO.2

(a) Disconnect the ventilation hose from the cylinder head cover.

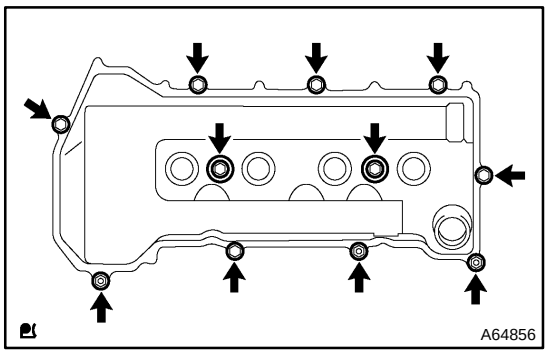

9. REMOVE CYLINDER HEAD COVER SUB–ASSY

(a) Remove the 9 bolts, 2 seal washers, 2 nuts, 3 clamp brackets and cylinder head cover.

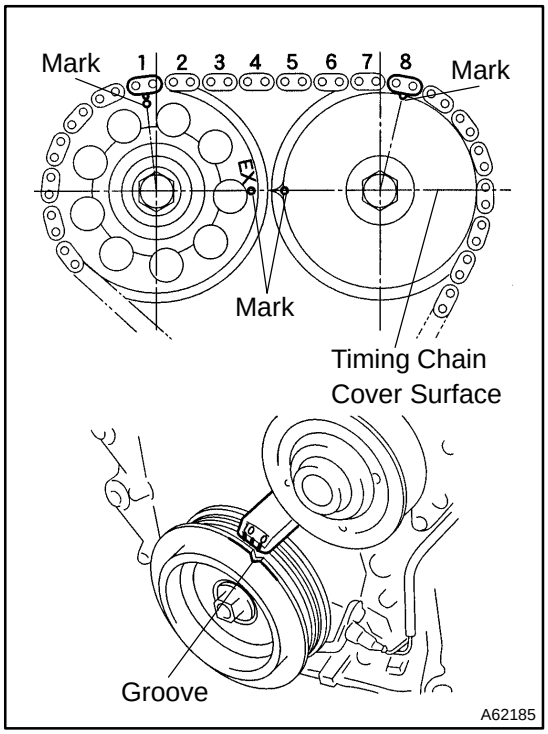

10. SET NO. 1 CYLINDER TO TDC/COMPRESSION

(a) Turn the crankshaft pulley, and align its groove with timing mark ”0” of the timing chain cover.

(b) Check that the point marks of the camshaft timing sprocket and VVT timing sprocket are in straight line on the timing chain cover surface as shown in the illustration.

HINT:

If not, turn the crankshaft 1 revolution (360°) and align the marks as above.

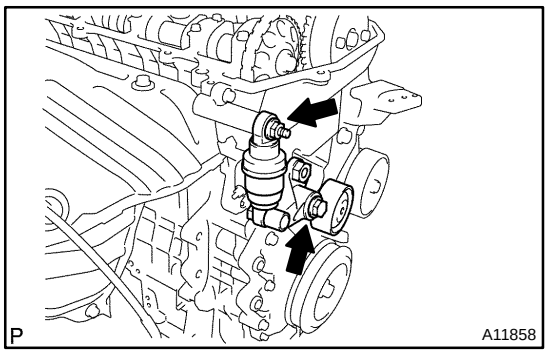

11. REMOVE V–RIBBED BELT TENSIONER ASSY

(a) Remove the bolt, nut and V–ribbed belt tensioner.

HINT:

Handle a jack up and down to remove the bolt.

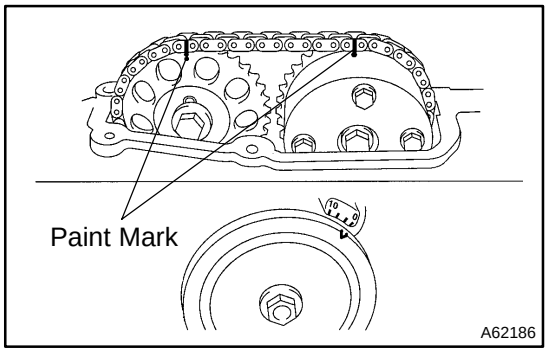

12. REMOVE CAMSHAFT

NOTICE:

Be sure not to revolve the crankshaft without the chain tensioner.

(a) Set the No. 1 cylinder to the TDC/compression.

(b) Place match marks on the timing chain and camshaft timing sprockets.

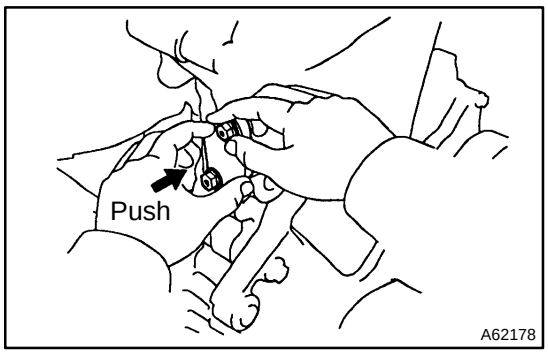

(c) Remove the 2 nuts and chain tensioner.

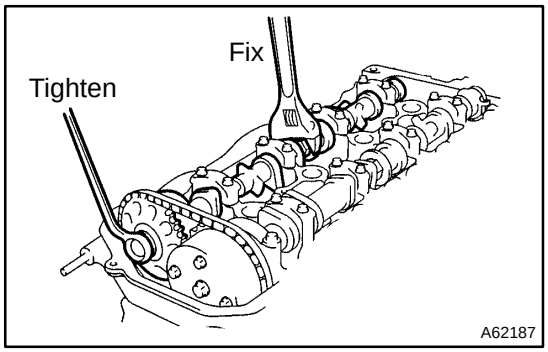

(d) Fix the camshaft with a wrench and so on, then loosen the camshaft timing gear set bolt.

NOTICE:
Be careful not to damage the valve lifter.

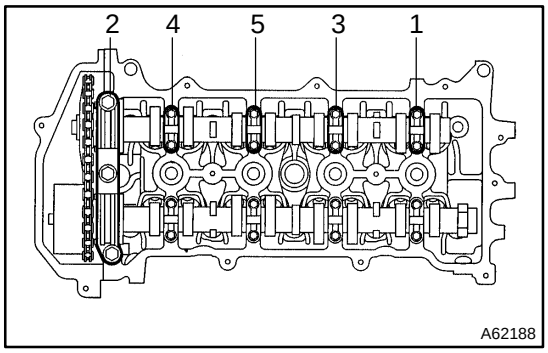

(e) Loosen the camshaft bearing cap bolts on No. 2 camshaft in the order as shown in the illustration in several passes,and remove the caps.

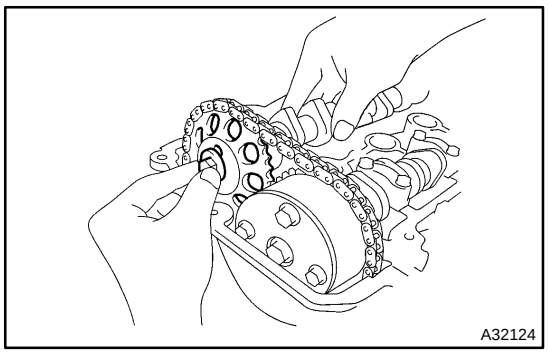

(f) Remove the camshaft timing gear as shown in the illustration.

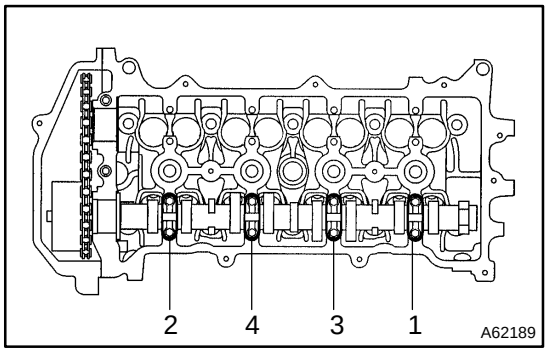

(g) Loosen the camshaft bearing cap bolts on camshaft in the order as shown in the illustration in several passes,and remove the caps.

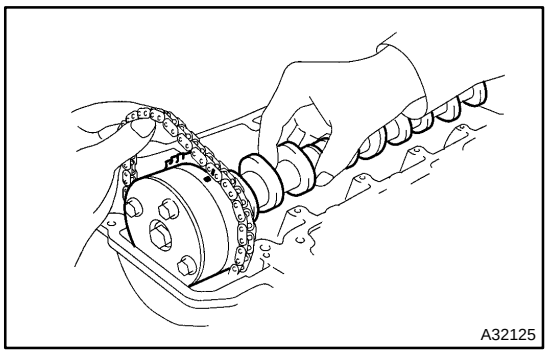

(h) Remove the camshaft with holding the timing chain.

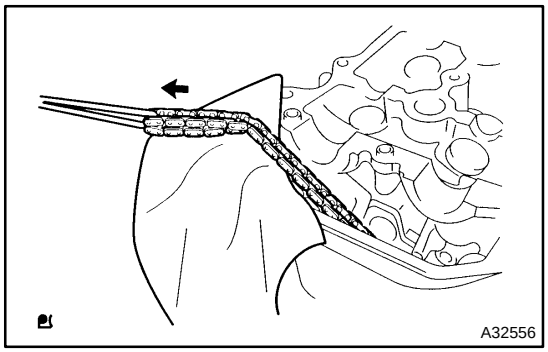

(i) Tie the timing chain with a string as shown in the illustration.

NOTICE:

Be careful not to drop anything inside the timing chain cover.

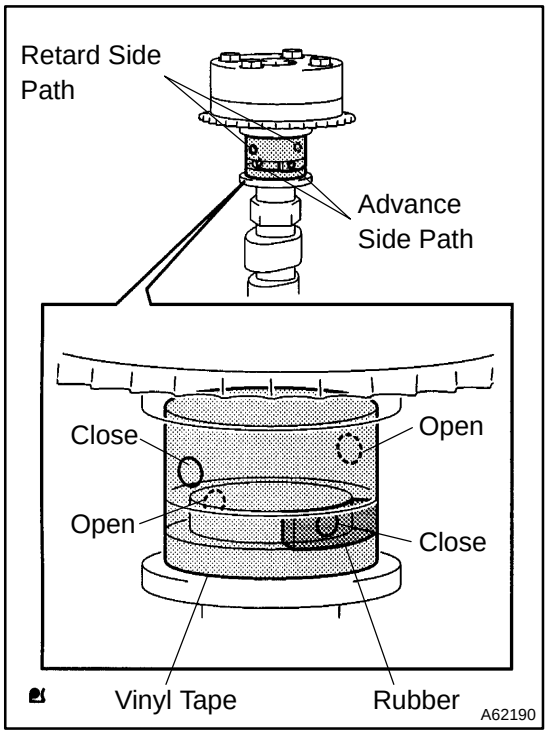

13. INSPECT CAMSHAFT TIMING GEAR ASSY

(a) Check the lock of camshaft timing gear.

(1) Grip the camshaft with a vice, and confirm the camshaft timing gear is locked.

NOTICE:

Be careful not to damage the camshaft.

(b) Release lock pin.

(1) Cover 4 oil paths of cam journal with vinyl tape as shown in the illustration.

HINT:

Two advance side paths are provided in the groove of the camshaft. Plug one of the path with a rubber piece.

(2) Break through the tapes of the advance side path and the retard side path on the opposite side of the groove.

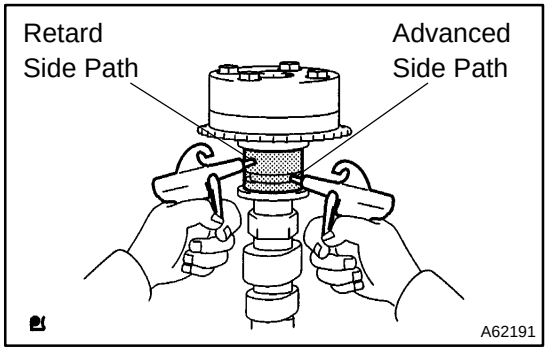

(3) Put air pressure into two broken paths (the advance side path and the retard side path) with about 150 kPa {1.5 kgf·cm}.

CAUTION:

Cover the pathes with shop rag to avoid oil splashing.

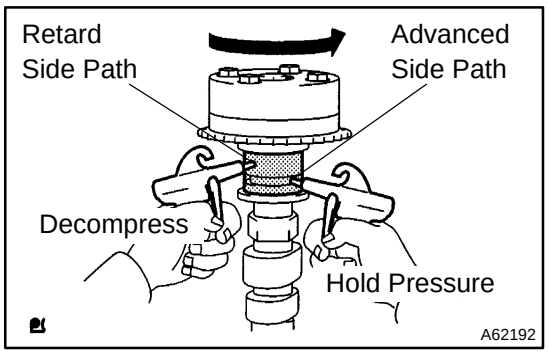

(4) Confirm if the camshaft timing gear assembly revolves in the timing advance direction when weakening the air pressure of the timing retard path.

HINT:

The lock pin is released, and camshaft timing gear, revolves in the advance direction.

(5) When the camshaft timing gear comes to the most advanced position, take out the air pressure of the timing retard side path, and then, take out that of timing advance side path.

CAUTION:

Camshaft timing assembly gear occasionally shifts to the retard side abruptly, if the air compression of the advanced side path is released before retard side path. It often causes the breakage of the lock pin.

(c) Check smooth revolution

(1) Revolve the camshaft timing gear assembly within the movable range except for the most retarded position several times, and check the smooth revolution.

CAUTION:

Be sure to perform this check by hand, instead of air pressure.

(d) Check the lock in the most retarded position.

(1) Confirm that the camshaft timing gear assembly is locked at the most retarded position.

14. REMOVE CAMSHAFT TIMING GEAR ASSY

(a) Grip the camshaft with a vice, and confirm that it the gear locked.

CAUTION:

Be careful not to damage the camshaft.

(b) Cover 4 oil paths of cam journal with vinyl tape as shown in the illustration.

HINT:

Two advance side paths are provided in the groove of the camshaft. Plug one of the path with a rubber piece.

(c) Break through the tapes of the advance side path and the retard side path on the opposite side of the groove.

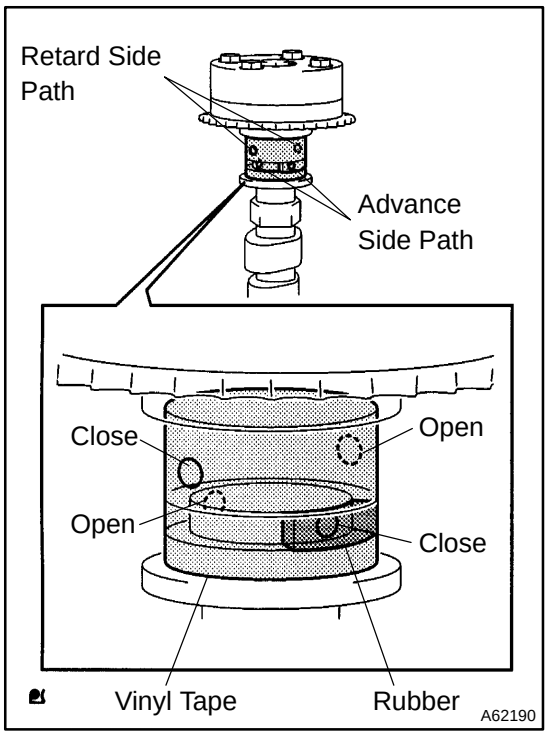

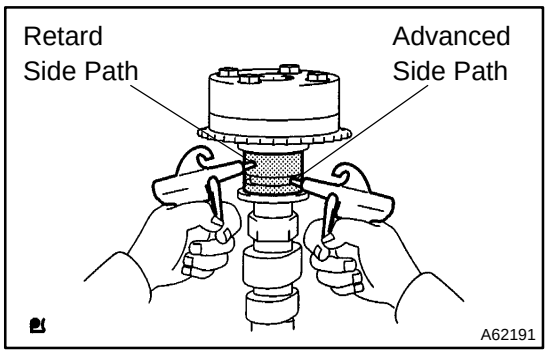

(d) Put air pressure into two broken paths (the advance side path and the retard side path) with about 150 kPa {1.5 kgf·cm}.

CAUTION:

Cover the pathes with shop rag to avoid oil splashing.

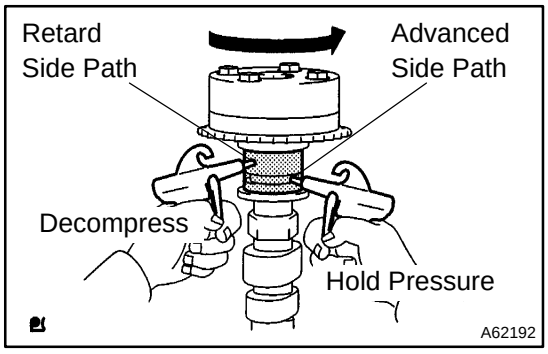

(e) Confirm if the camshaft timing gear assembly revolves in the timing advance direction when weakening the air pressure of the timing retard path.

HINT:

The lock pin is released, and camshaft timing gear revolves in the advance direction.

(f) When the camshaft timing gear comes to the most advanced position, take out the air pressure of the timing retard side path, and then, takeout that of timing advance side path.

CAUTION:

Camshaft timing gear assembly occasionally shifts to the retard side abruptly, if the air compression of the advanced side path is released before retard side paths. It often causes the breakage of the lock pin.

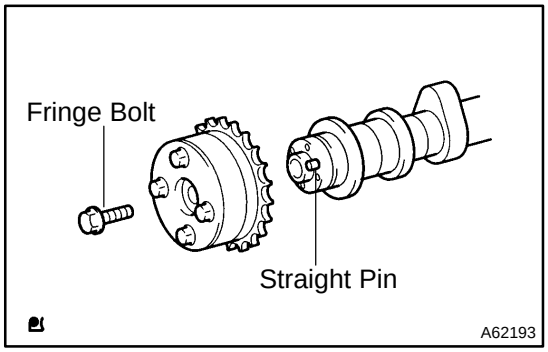

(g) Remove the fringe bolt of camshaft timing gear assembly.

NOTICE:

- **Be sure not to remove the other 4 bolts.**
- **In case of reusing the camshaft timing gear, release the strait pin locking first, and then install the gear.**

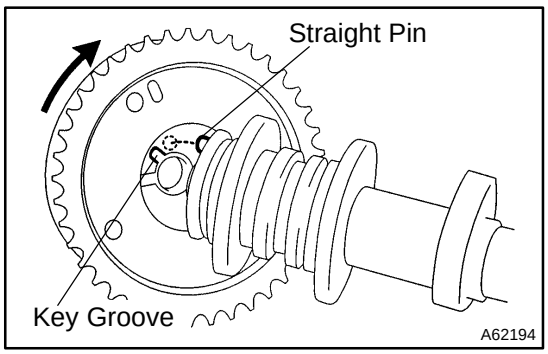

15. INSTALL CAMSHAFT TIMING GEAR ASSY

(a) Put the camshaft timing gear assembly and the camshaft together with the straight pin off the key groove.

(b) Turn the camshaft timing gear assembly to the left direction (as shown in the illustration) with pushing it lightly against the camshaft. Push further at the position where the pin gets into the groove.

CAUTION:

Be sure not to turn the camshaft timing gear to the retard angle side (to the right angle).

(c) Check that there is no clearance between the gear's fringe and the camshaft.

(d) Tighten the fringe bolt with the camshaft timing gear fixed.
Torque: 54 N·m (551 kgf·cm 40 ft·lbf)

(e) Check that the camshaft timing gear assembly can move to the retard angle side (the right angle), and is locked at the most retarded position.

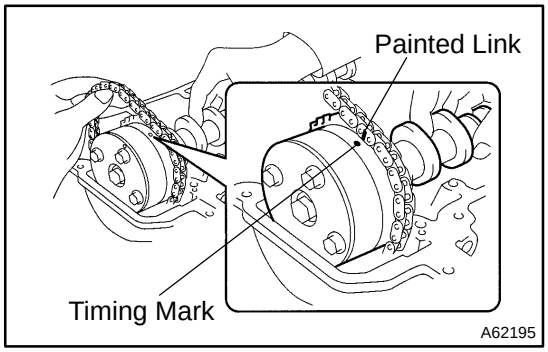

16. INSTALL CAMSHAFT

(a) As shown in the illustration, install the timing chain on the camshaft timing gear, with the painted links aligned with the timing marks on the camshaft timing gear.

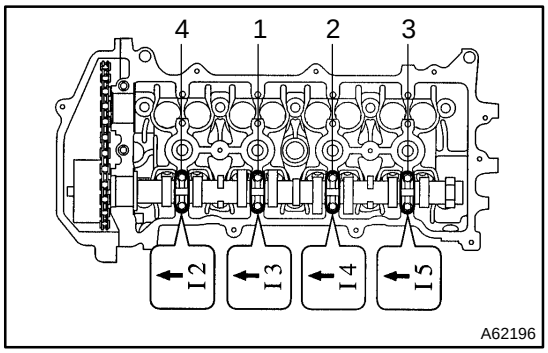

(b) Examine the front marks and numbers and tighten the bolts in the order shown in the illustration.
Torque: 13 N·m (133 kgf·cm, 10 ft·lbf)

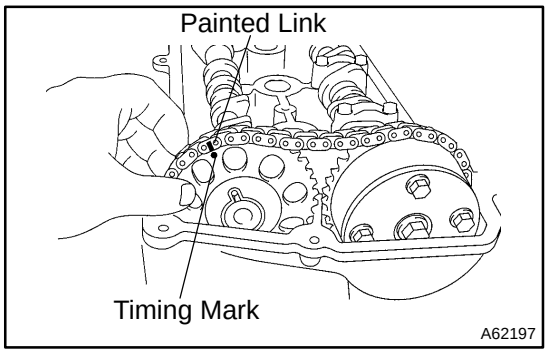

(c) Put the camshaft No.2 on the cylinder head with the painted links of the chain aligned with the timing mark on the camshaft timing gear.

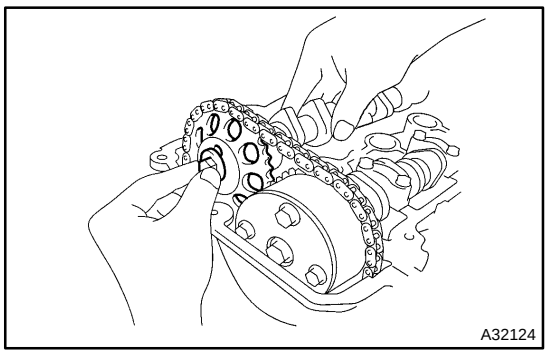

(d) Tighten the camshaft timing gear set bolt temporarily.

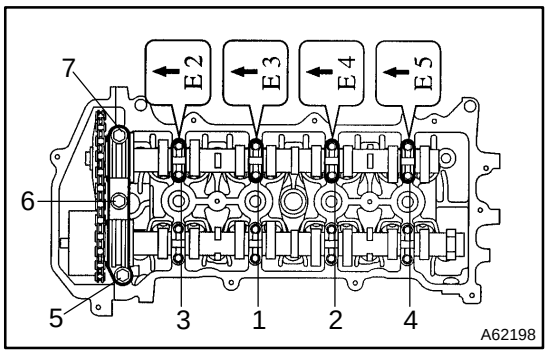

(e) Examine the front marks and numbers and tighten the bolts in the order shown in the illustration.
Torque: 13 N·m (133 kgf·cm, 10 ft·lbf)

(f) Install the bearing cap No. 1.
Torque: 23 N·m (235 kgf·cm, 17 ft·lbf)

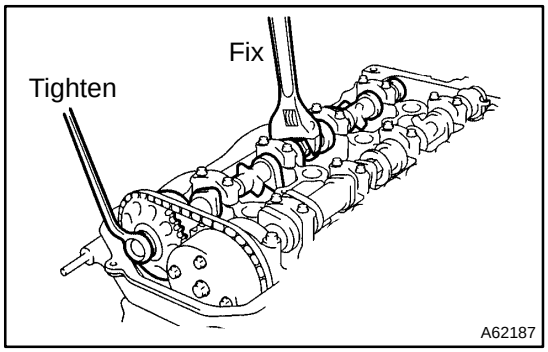

(g) Fix the camshaft with a wrench and so on, then tighten the camshaft timing gear set bolt.
Torque: 54 N·m (551 kgf·cm, 40 ft·lbf)

NOTICE:
Be careful not damage the valve lifter.

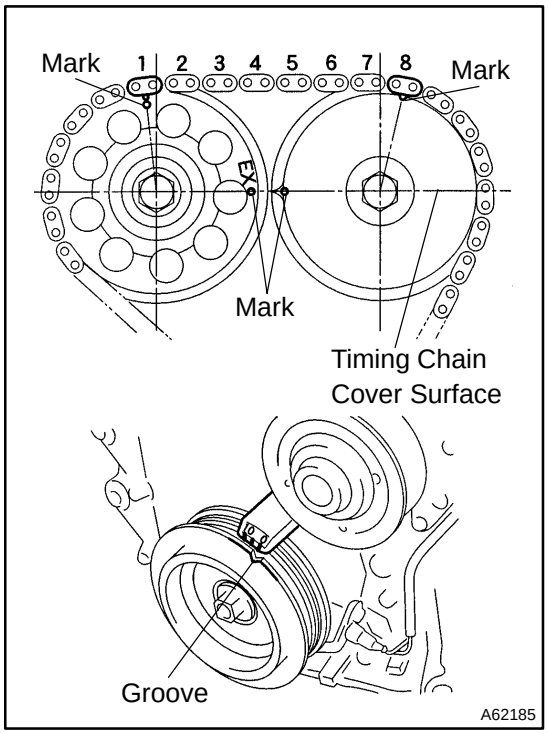

(h) Check the match marks on the timing chain and camshaft timing sprockets, and then the alignment of the pulley groove with timing mark of the chain cover as shown in the illustration.

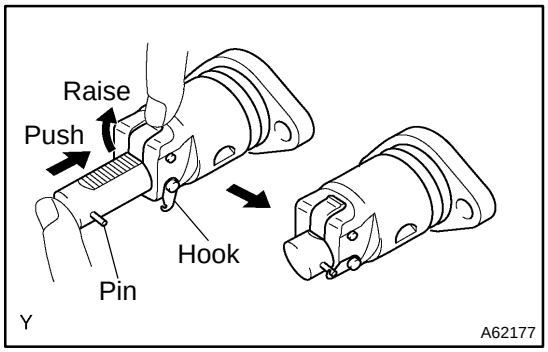

(i) Install chain tensioner.
(1) Check the O–ring is clean, and set the hook as shown in the illustration.

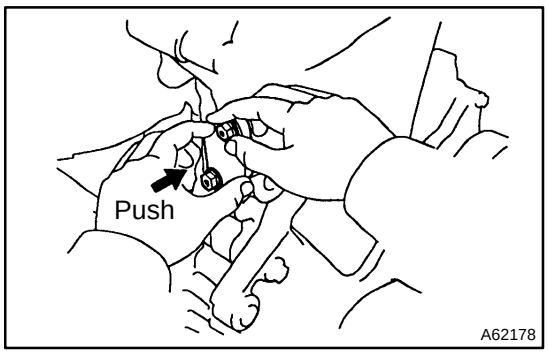

(2) Apply engine oil to the chain tensioner and install it with the 2 nuts.

Torque: 9.0 N·m (92 kgf·cm, 80 in·lbf)

NOTICE:

When installing the tensioner, set the hook again if the hook release the plunger.

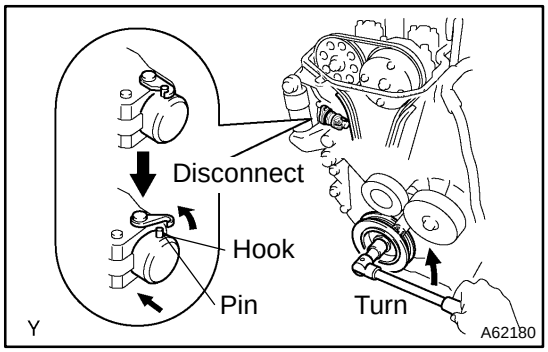

(3) Turn the crankshaft counter clockwise, and disconnect the plunger knock pin from the hook.

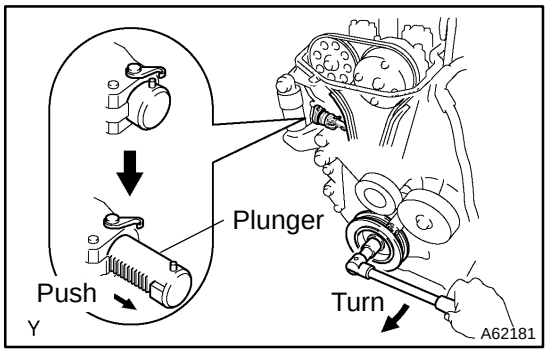

(4) Turn the crankshaft clockwise, and check that the slipper is pushed by the plunger.

HINT:

If the plunger does not spring out, press the slipper into the chain tensioner with a screwdriver so that the hook is released from the knock pin and the plunger springs out.

17. ADJUST VALVE CLEARANCE (See page 14–5)

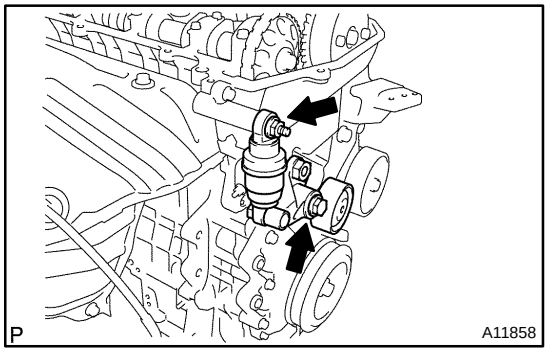

18. INSTALL V–RIBBED BELT TENSIONER ASSY

(a) Install the V–ribbed belt tensioner with the nut and bolt.

Torque:

Nut 29 N·m (296 kgf·cm, 21 ft·lbf)

Bolt 69 N·m (704 kgf·cm, 51 ft·lbf)

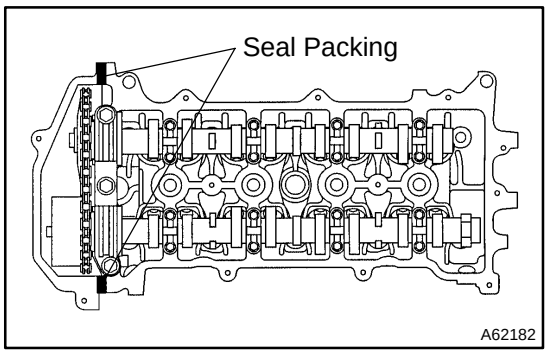

19. INSTALL CYLINDER HEAD COVER SUB–ASSY

(a) Remove any old packing (FIPG) material.

(b) Apply seal packing to 2 locations as shown in the illustration.

Seal packing: Part No. 08826–00080 or equivalent

NOTICE:

- **Remove any oil from the contact surface.**
- **Install the cylinder head cover within 3 minutes after applying seal packing.**
- **Do not put into engine oil 2 hours after installing.**

(c) Install the cylinder head cover and 3 cable brackets with the 9 bolts, 2 seal washers and 2 nuts. Uniformly tighten the bolts and nuts, in the several passes.

Torque:

A 11 N·m (112 kgf·cm, 8 ft·lbf)

B 9.0 N·m (92 kgf·cm, 80 in·lbf)

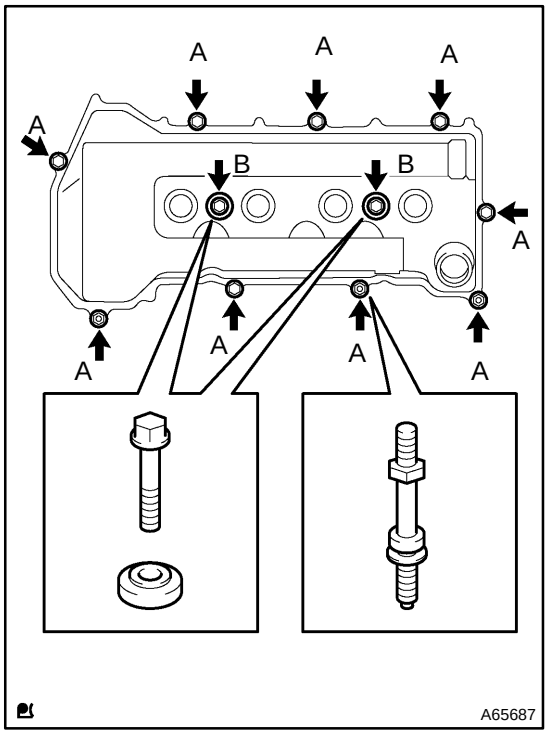

20. INSTALL IGNITION COIL ASSY

(a) Install the 4 ignition coils with the 4 bolts.

Torque: 9.0 N·m (92 kgf·cm, 80 in.·lbf)

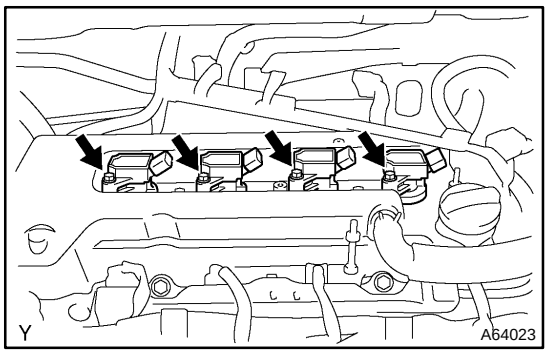

21. INSTALL ENGINE WIRE

(a) Install the engine wire with the bolt and nut.

Torque: 9.0 N·m (92 kgf·cm, 80 in.·lbf)

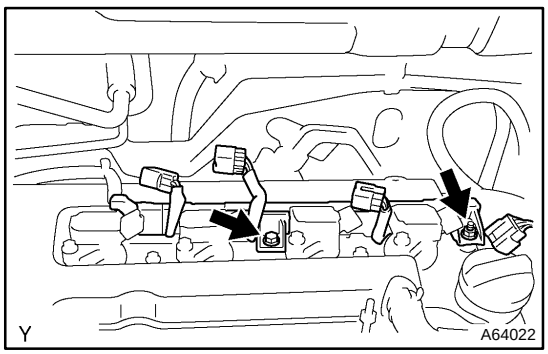

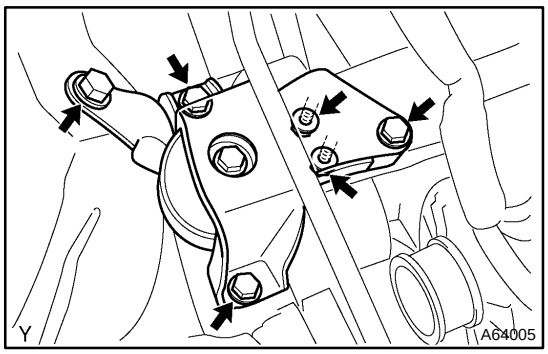

22. INSTALL ENGINE MOUNTING INSULATOR SUB–ASSY RH

(a) Install engine mounting insulator with the 4 bolts and 2 nuts.

Torque: 52 N·m (530 kgf·cm, 38 ft·lbf)

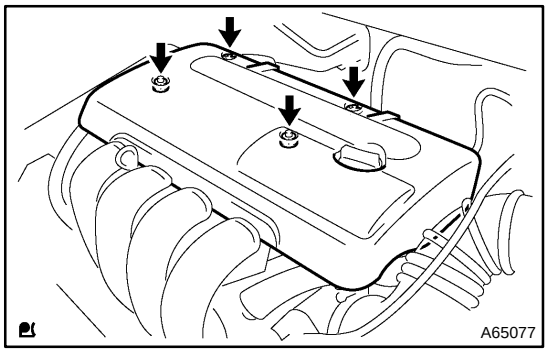

23. INSTALL CYLINDER HEAD COVER NO.2

(a) Install the cylinder head cover with the 2 nuts and 2 clips.

Torque: 7.0 N·m (71 kgf·cm, 62 in.·lbf)

24. CHECK ENGINE OIL LEAK

CHAIN SUB–ASSY

140OG–01

COMPONENTS

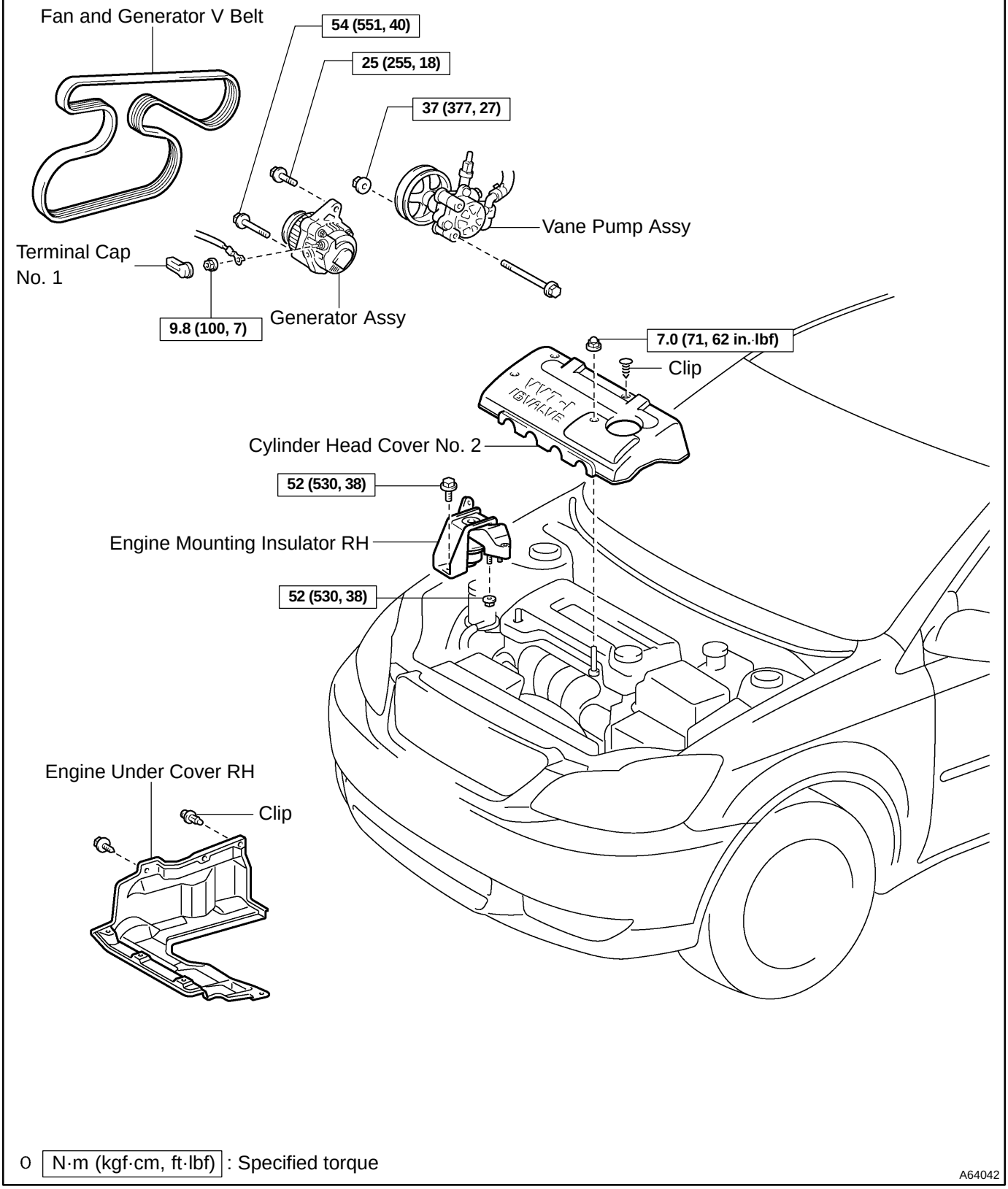

o N·m (kgf·cm, ft·lbf) : Specified torque

A64042

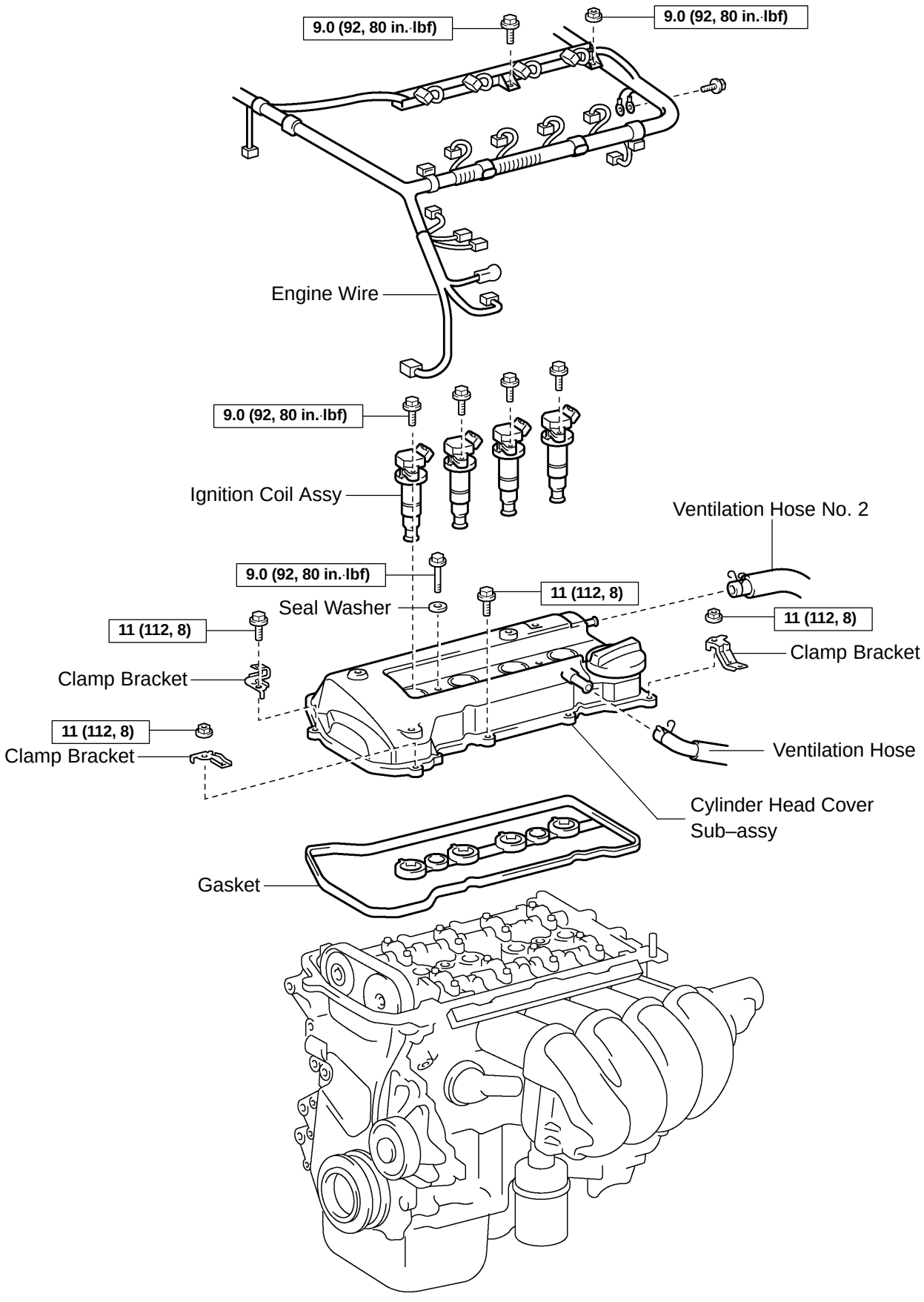
9.0 (92, 80 in.·lbf)
9.0 (92, 80 in.·lbf)
Engine Wire
9.0 (92, 80 in.·lbf)
Ignition Coil Assy
Ventilation Hose No. 2
9.0 (92, 80 in.·lbf)
11 (112, 8)
Seal Washer
11 (112, 8)
11 (112, 8)
Clamp Bracket
Clamp Bracket
11 (112, 8)
Clamp Bracket
Ventilation Hose
Cylinder Head Cover Sub–assy
Gasket
O N·m (kgf·cm, ft·lbf) : Specified torque
A64043

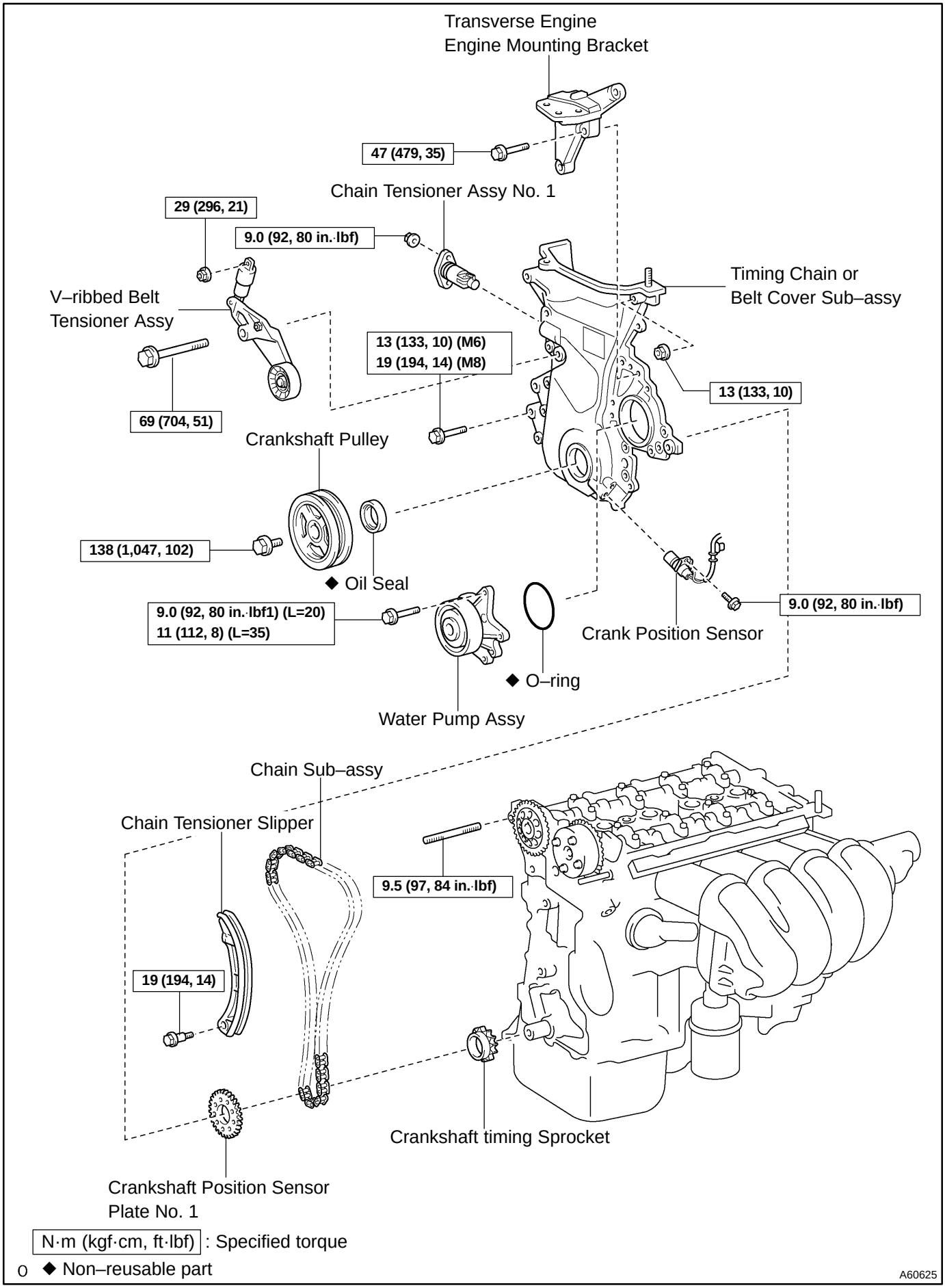
Transverse Engine
Engine Mounting Bracket
47 (479, 35)
Chain Tensioner Assy No. 1
29 (296, 21)
9.0 (92, 80 in.·lbf)
V–ribbed Belt
Tensioner Assy
Timing Chain or
Belt Cover Sub–assy
13 (133, 10) (M6)
19 (194, 14) (M8)
13 (133, 10)
69 (704, 51)
Crankshaft Pulley
138 (1,047, 102)
◆ Oil Seal
9.0 (92, 80 in.·lbf1) (L=20)
11 (112, 8) (L=35)
9.0 (92, 80 in.·lbf)
Crank Position Sensor
◆ O–ring
Water Pump Assy
Chain Sub–assy
Chain Tensioner Slipper
9.5 (97, 84 in.·lbf)
19 (194, 14)
Crankshaft timing Sprocket
Crankshaft Position Sensor
Plate No. 1
N·m (kgf·cm, ft·lbf) : Specified torque
◆ Non–reusable part
A60625

140OH–01

REPLACEMENT

1. REMOVE ENGINE UNDER COVER RH
2. DRAIN COOLANT (See page 16–7)
3. REMOVE FRONT WHEEL RH

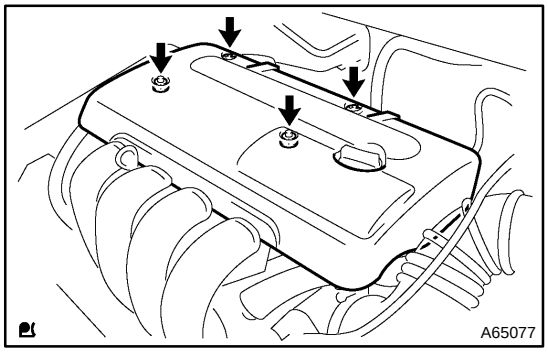

4. REMOVE CYLINDER HEAD COVER NO.2

(a) Remove the 2 nuts, 2 clips and cylinder head cover.

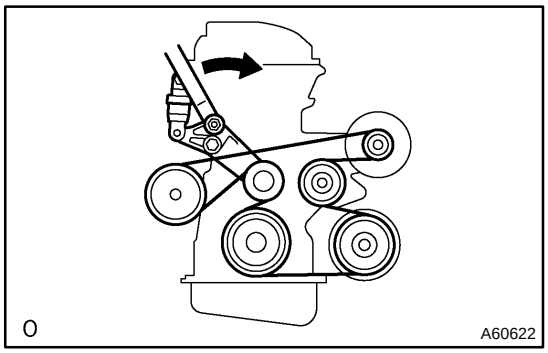

5. REMOVE FAN AND GENERATOR V BELT

(a) Turn the V–ribbed belt tensioner slowly clockwise and loosen it. Then, remove the fan and generator V belt and put back the V–ribbed belt tensioner little by little and fix it quietly.

6. SEPARATE VANE PUMP ASSY (See page 51–8)

NOTICE:

Do not disconnect the hose.

7. REMOVE GENERATOR ASSY (See page 19–16)

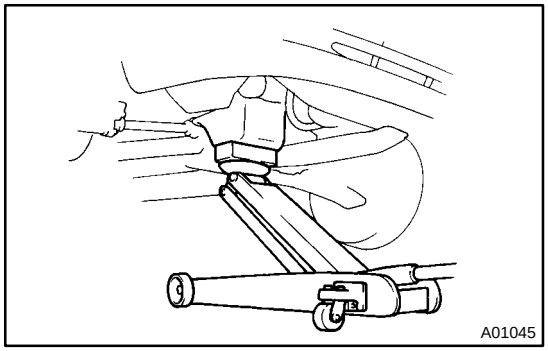

8. REMOVE ENGINE MOUNTING INSULATOR SUB–ASSY RH

(a) Remove the PS oil pump reservoir and put it aside.

(b) Place a wooden block between the jack and engine, and set the jack, then remove the 4 bolts, the 2 nuts and engine mounting insulator RH.

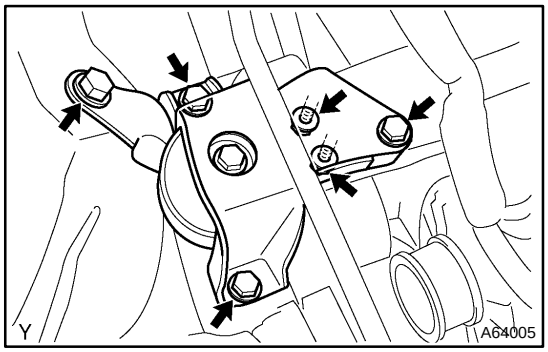

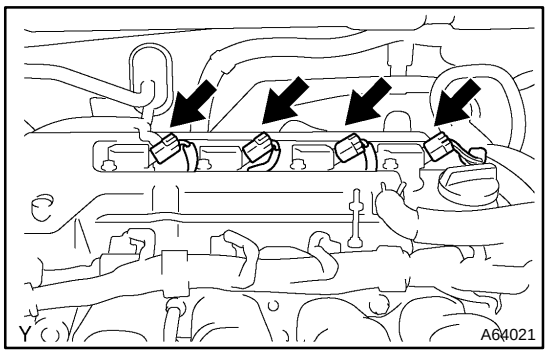

9. DISCONNECT ENGINE WIRE

(a) Remove the 5 clamps from the 5 clamp brackets.

(b) Disconnect the 4 ignition coil connectors.

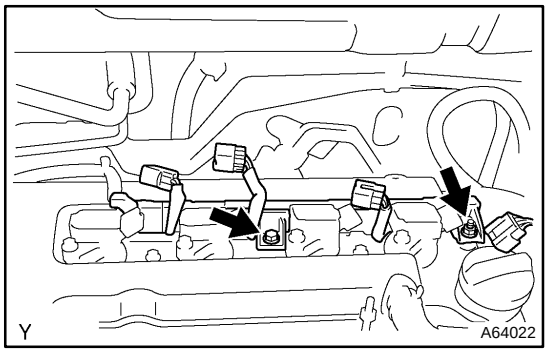

(c) Remove the bolt and nut installing the engine wire.

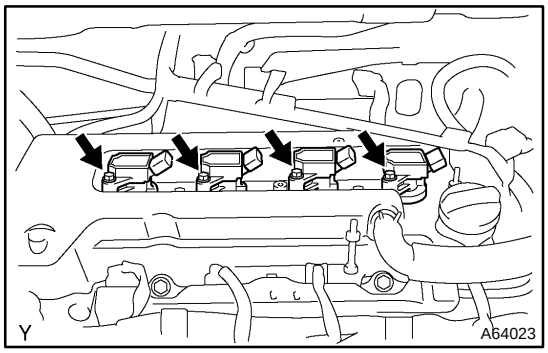

10. REMOVE IGNITION COIL ASSY

(a) Remove the 4 bolts and 4 ignition coils.

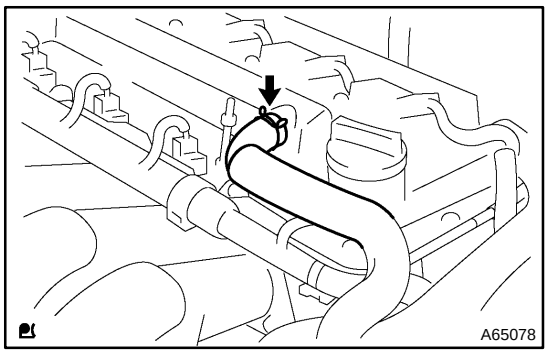

11. DISCONNECT VENTILATION HOSE

(a) Disconnect the ventilation hose from the cylinder head cover.

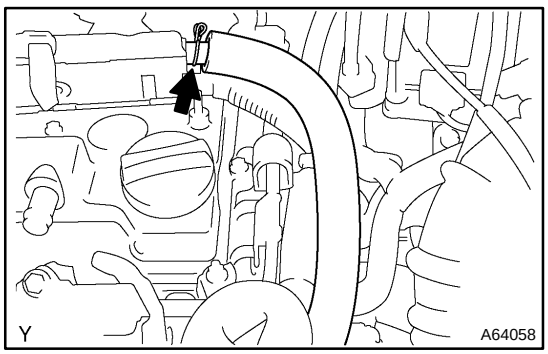

12. DISCONNECT VENTILATION HOSE NO.2

(a) Disconnect the ventilation hose from the cylinder head cover.

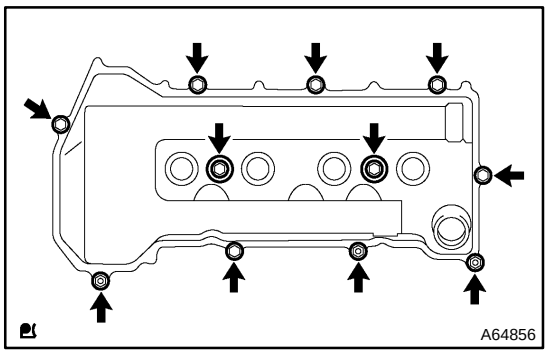

13. REMOVE CYLINDER HEAD COVER SUB–ASSY

(a) Remove the 9 bolts, 2 seal washers, 2 nuts, 3 clamp brackets and cylinder head cover.

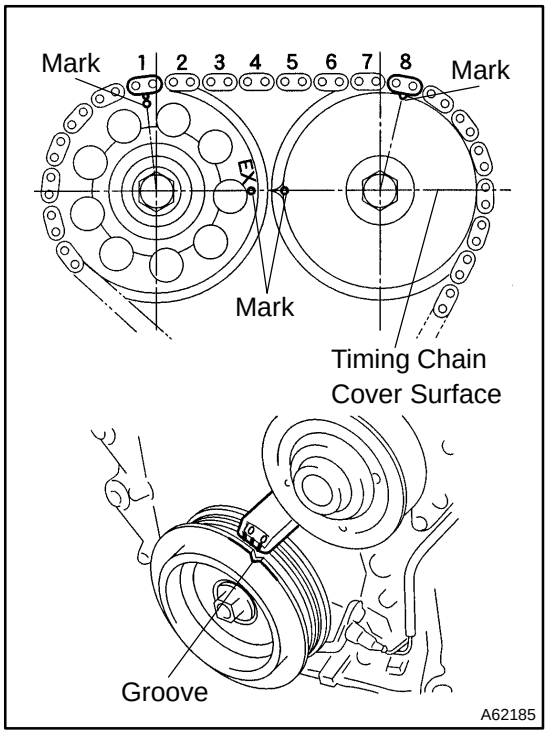

14. SET NO. 1 CYLINDER TO TDC/COMPRESSION

(a) Turn the crankshaft pulley, and align its groove with timing mark ”0” of the timing chain cover.

(b) Check that the point marks of the camshaft timing sprocket and VVT timing sprocket are in straight line on the timing chain cover surface as shown in the illustration.

HINT:

If not, turn the crankshaft 1 revolution (360°) and align the marks as above.

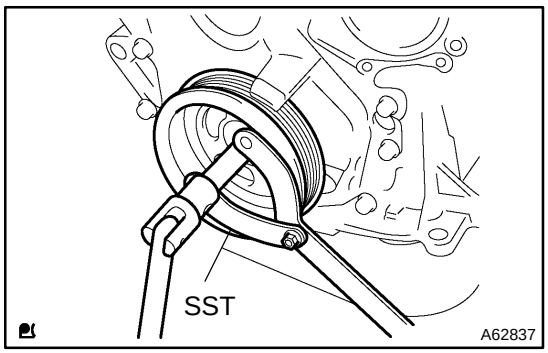

15. REMOVE CRANKSHAFT PULLEY

(a) Using SST, remove the pulley bolt.
SST 09960–10010 (09962–01000, 09963–01000)

(b) Remove the crankshaft pulley from the crankshaft.

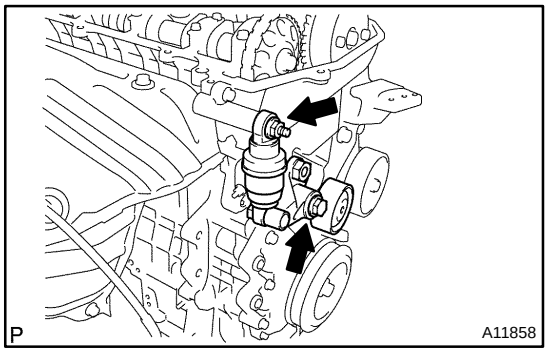

16. REMOVE V–RIBBED BELT TENSIONER ASSY

(a) Remove the bolt, nut and V–ribbed belt tensioner.

HINT:

Handle a jack up and down to remove the bolt.

17. REMOVE WATER PUMP ASSY (See page 16–8)

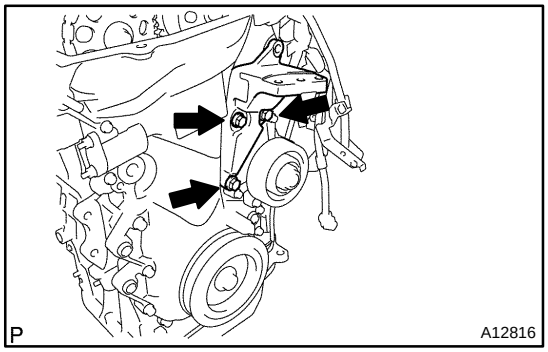

18. REMOVE TRANSVERSE ENGINE ENGINE MOUNTING BRACKET

(a) Remove the 3 bolts and transverse engine engine mounting bracket.

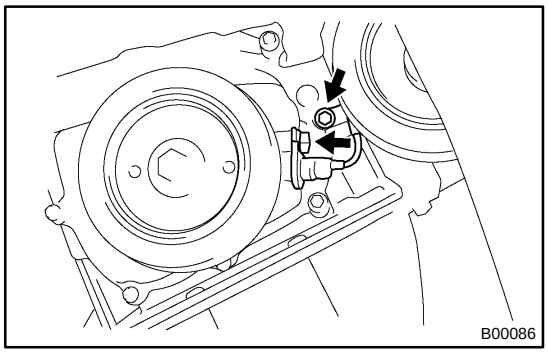

19. REMOVE CRANK POSITION SENSOR

(a) Remove the 2 bolts installing the crank position sensor.

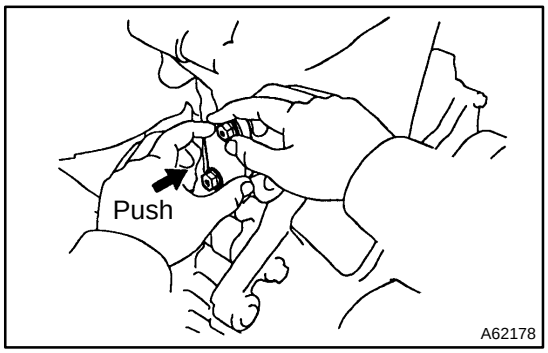

20. REMOVE CHAIN TENSIONER ASSY NO.1

(a) Remove the 2 nuts and chain tensioner.

NOTICE:

Be sure not to revolve the crankshaft without the chain tensioner.

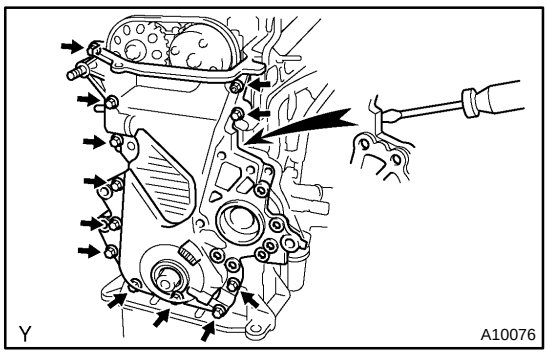

21. REMOVE TIMING CHAIN OR BELT COVER SUB–ASSY

(a) Remove the 11 bolts and nuts.

(b) Using a torx wrench socket (E8), remove the stud bolt.

(c) Remove the timing chain cover by prying the portions between the cylinder head and cylinder block with a screwdriver.

NOTICE:

Be careful no tot damage the contact surfaces of the timing chain cover, cylinder head and cylinder block.

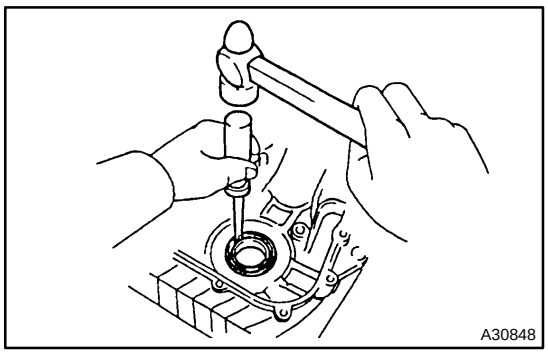

22. REMOVE TIMING GEAR COVER OIL SEAL

(a) Using a screwdriver, remove the oil seal.

23. REMOVE CRANKSHAFT POSITION SENSOR PLATE NO.1

24. REMOVE CHAIN TENSIONER SLIPPER

(a) Remove the bolt and chain tensioner slipper.

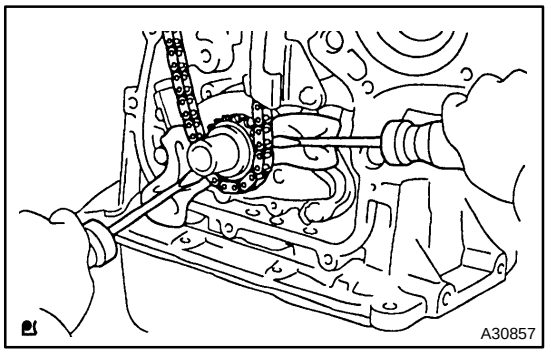

25. REMOVE CHAIN SUB–ASSY

(a) Remove the timing chain with the crankshaft timing gear plying screwdrivers as shown in the illustration.

NOTICE:

- **Put shop rag to protect the engine.**
- **In case of revolving the camshafts with the chain off the sprockets, turn the crankshaft 1/4 revolution for valves not to touch the pistons.**

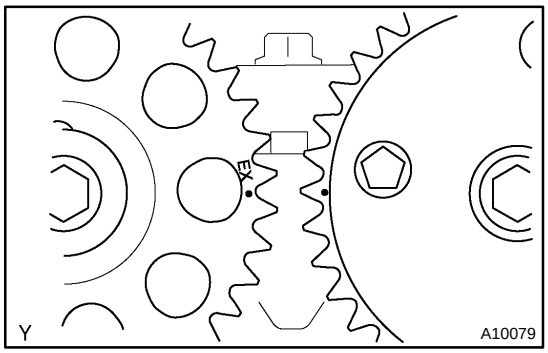

26. INSTALL CHAIN SUB–ASSY

(a) Set No. 1 cylinder to TDC/compression.

(1) Turn the hexagonal wrench head portion of the camshafts, and align the point marks of the camshaft timing sprockets.

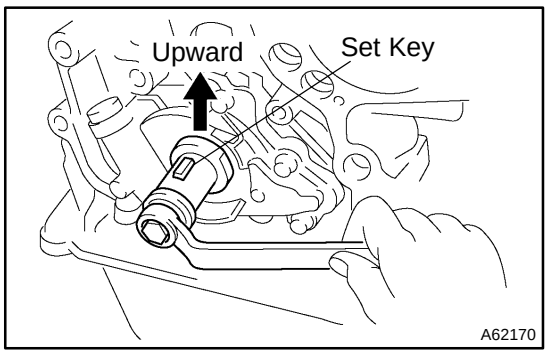

(2) Using a crankshaft pulley bolt, turn the crankshaft and set the set key on the crankshaft upward.

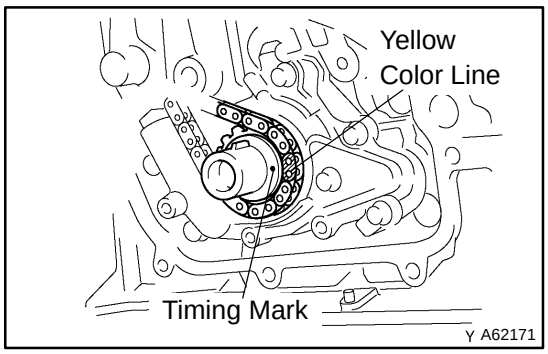

(b) Install the timing chain on the crankshaft timing sprocket with the yellow color link aligned with the timing mark on the crankshaft timing sprocket.

HINT:

Three yellow color links are on the chain.

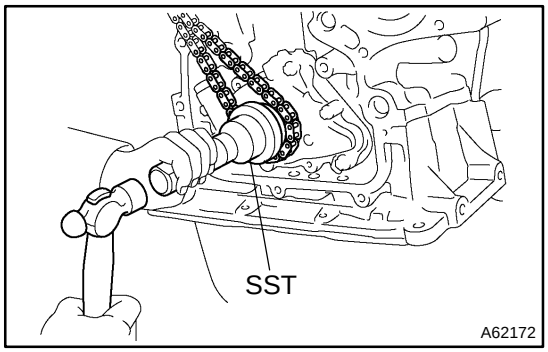

(c) Using SST, install the crankshaft timing sprocket.
SST 09223–22010

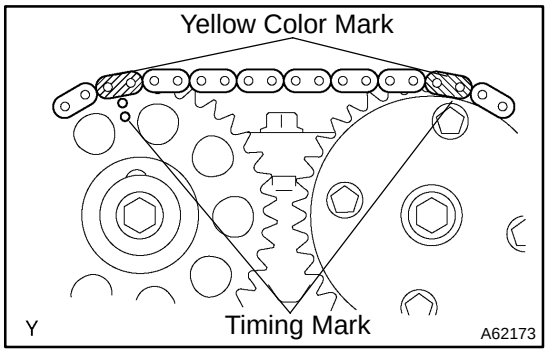

(d) Install the timing chain on the camshaft timing sprockets with the yellow color links aligned with the timing marks on the camshaft timing sprockets.

27. INSTALL CHAIN TENSIONER SLIPPER

(a) Install the chain tensioner slipper with the bolt.
Torque: 19 N·m (194 kgf·cm, 14 ft·lbf)

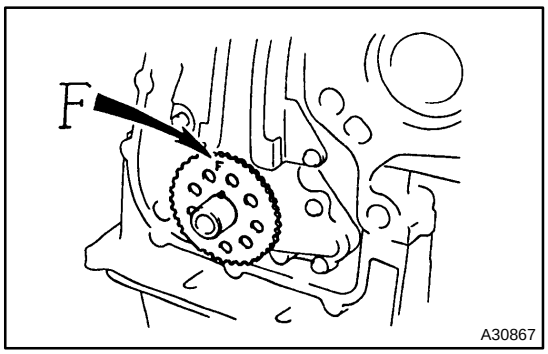

28. INSTALL CRANKSHAFT POSITION SENSOR PLATE NO.1

(a) Install the plate with the ”F” mark facing forward.

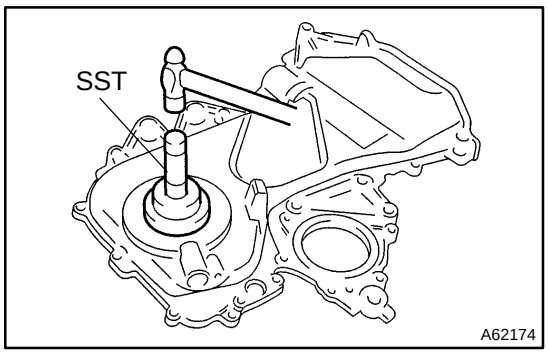

29. INSTALL TIMING GEAR COVER OIL SEAL

(a) Apply MP grease to a new oil seal lip.

(b) Using SST, tap in the oil seal until its surface is flush with the timing chain cover edge.

SST 09223–22010

NOTICE:

Keep the lip off foreign materials.

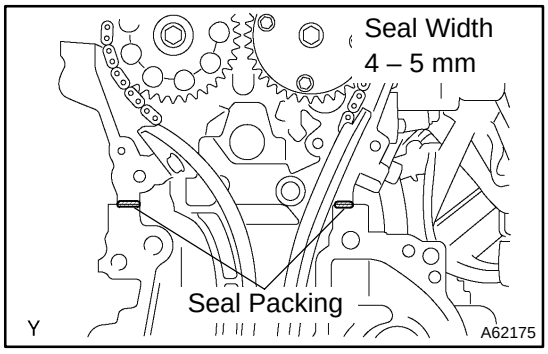

30. INSTALL TIMING CHAIN OR BELT COVER SUB–ASSY

(a) Remove any old packing material from the contact surface.

(b) Apply seal packing in the shape of bead (Diameter 3.5 mm – 4.5 mm (0.1379 – 0.177 in.)) consequently as shown in the illustration.

Seal packing:

Water pump part part No. 08826–00100 or equivalent

Other part part No. 08826–00080 or equivalent.

NOTICE:

- **Remove any oil from the contact surface.**
- **Install the oil pan within 3 minutes after applying seal packing.**
- **Do not put into engine oil within 2 hours after installing.**

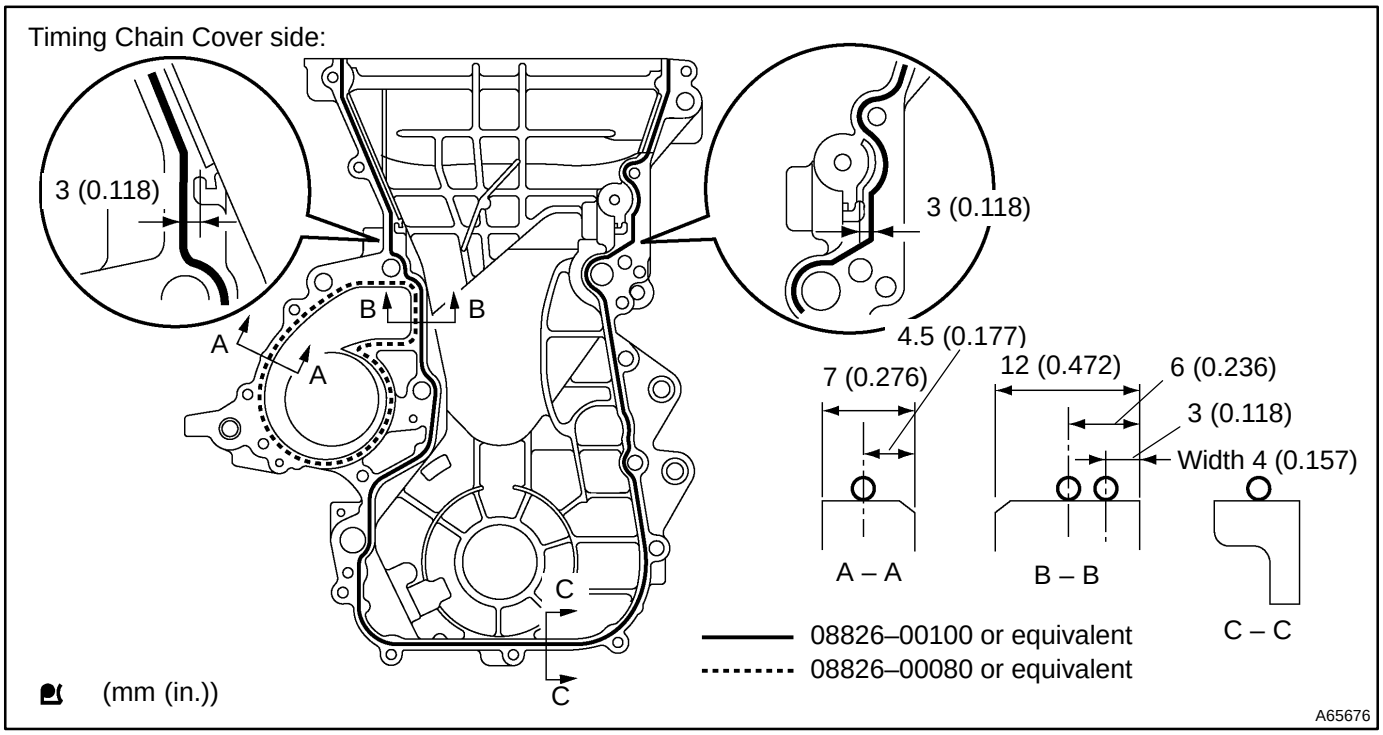

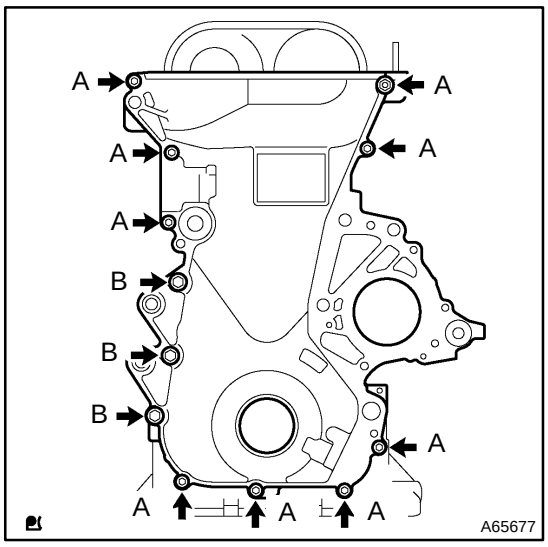

(c) Install the timing chain cover with the 11 bolts and nut.
Torque:
A: 13 N·m (133 kgf·cm, 10 ft·lbf)
B: 19 N·m (194 kgf·cm, 14 ft·lbf)

(d) Using a torx wrench socket (E8), install the stud bolt.
Torque: 9.5 N·m (97 kgf·cm, 84 in.·lbf)

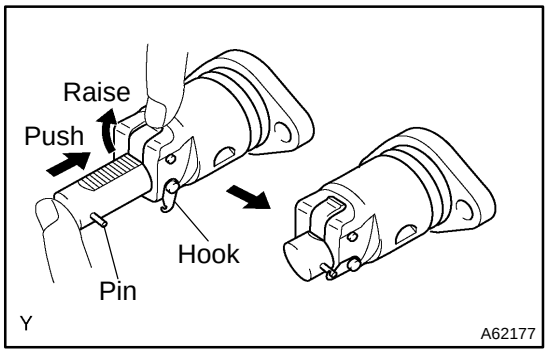

31. INSTALL CHAIN TENSIONER ASSY NO.1

(a) Check the O–ring is clean, and set the hook as shown in the illustration.

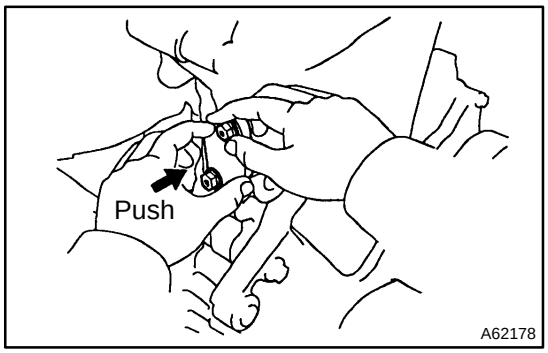

(b) Apply engine oil to the chain tensioner and install it withe 2 nuts.
Torque: 9.0 N·m (92 kgf·cm, 80 in.·lbf)

NOTICE:
When installing the tensioner, set the hook again if the hook release the plunger.

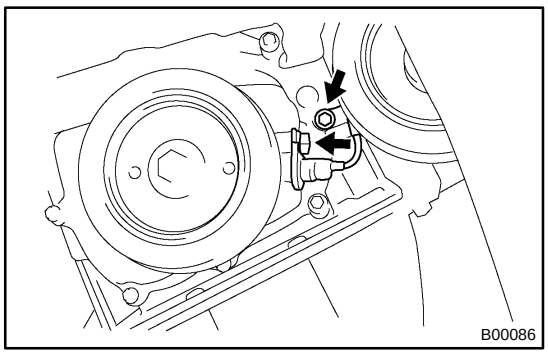

32. INSTALL CRANK POSITION SENSOR

(a) Install the crank position sensor with the 2 bolts.
Torque: 9.0 N·m (92 kgf·cm, 80 in.·lbf)

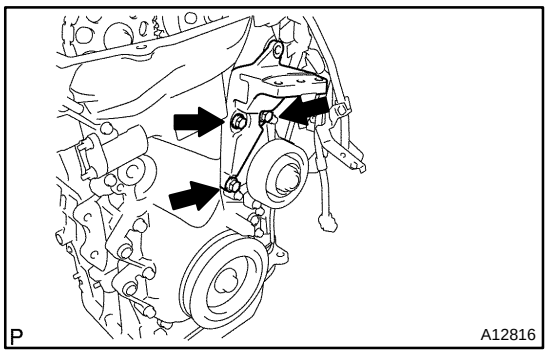

33. INSTALL TRANSVERSE ENGINE ENGINE MOUNTING BRACKET

(a) Install the transverse engine engine mounting bracket with the 3 bolts.
Torque: 47 N·m (479 kgf·cm, 35 ft·lbf)

34. INSTALL WATER PUMP ASSY (See page 16–8)

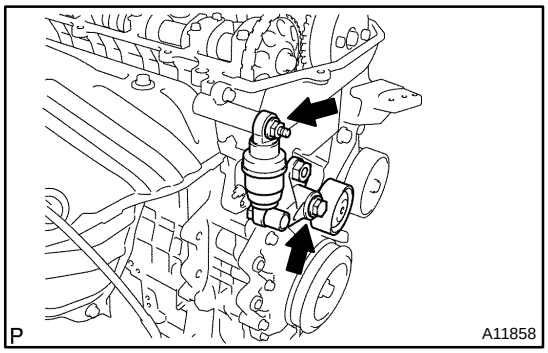

35. INSTALL V–RIBBED BELT TENSIONER ASSY

(a) Install the V–ribbed belt tensioner with the nut and bolt.
Torque:
Nut 29 N·m (296 kgf·cm, 21 ft·lbf)
Bolt 69 N·m (704 kgf·cm, 51 ft·lbf)

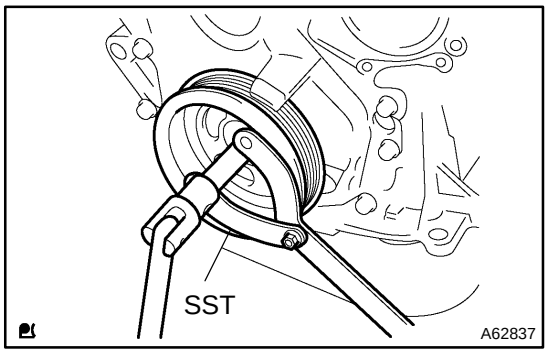

36. INSTALL CRANKSHAFT PULLEY

(a) Align the pulley set key with the key groove of the pulley, and slide on the pulley.

(b) Using SST, install the crankshaft pulley bolt.
SST 09960–10010 (09962–01000, 09963–01000)
Torque: 138 N·m (1,407 kgf·cm, 102 ft·lbf)

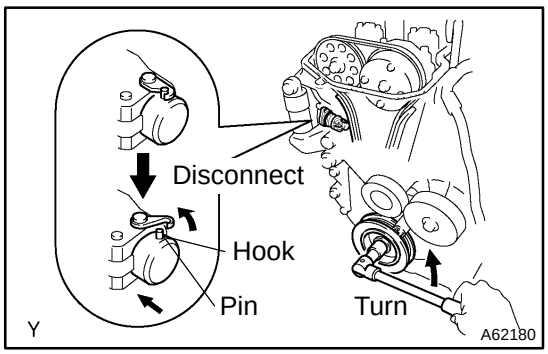

(c) Turn the crankshaft counter clockwise, and disconnect the plunger knock pin form the hook.

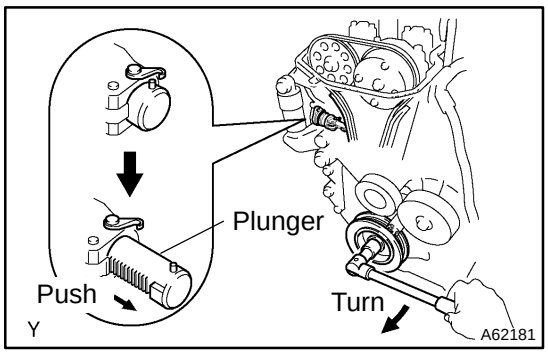

(d) Turn the crankshaft clockwise, and check that the slipper is pushed by the plunger.

HINT:

If the plunger does not spring out, press the slipper into the chain tensioner with a screwdriver so that the hook is released from the knock pin and the plunger springs out.

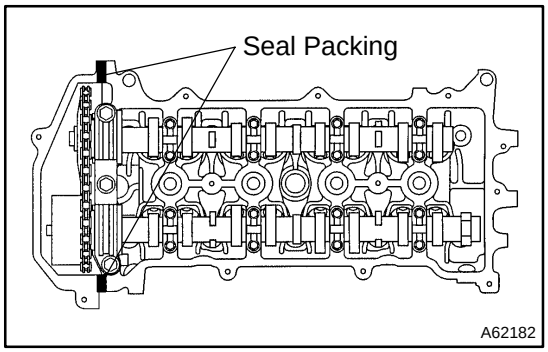

37. INSTALL CYLINDER HEAD COVER SUB–ASSY

(a) Remove any old pacing (FIPG) material.

(b) Apply seal packing to 2 locations as shown in the illustration.

Seal packing: Part No. 08826–00080 or equivalent

NOTICE:

- **Remove any oil from the contact surface.**
- **Install the cylinder head cover within 3 minutes after applying seal packing.**
- **Do not put into engine oil 2 hours after installing.**

(c) Install the cylinder head cover and 3 cable brackets with the 9 bolts, 2 seal washers and 2 nuts. Uniformly tighten the bolts and nuts, in the several passes.

Torque:

A 11 N·m (112 kgf·cm, 8 ft·lbf)

B 9.0 N·m (92 kgf·cm, 80 in.·lbf)

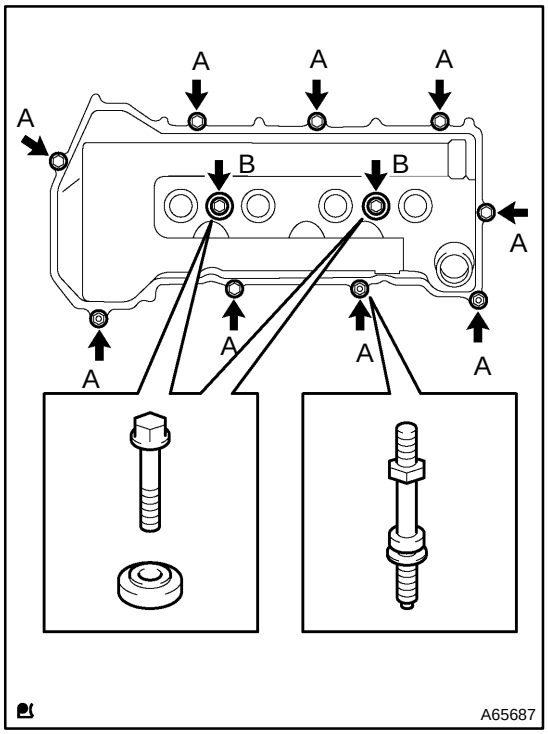

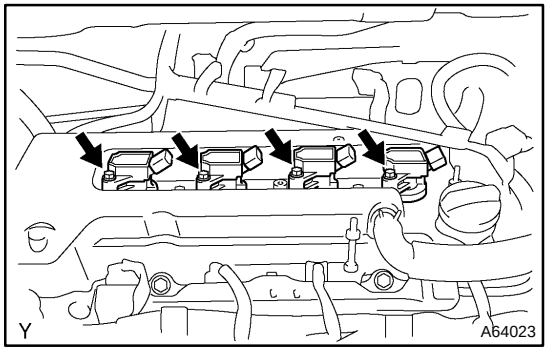

38. INSTALL IGNITION COIL ASSY

(a) Install the 4 ignition coils with the 4 bolts.

Torque: 9.0 N·m (92 kgf·cm, 80 in.·lbf)

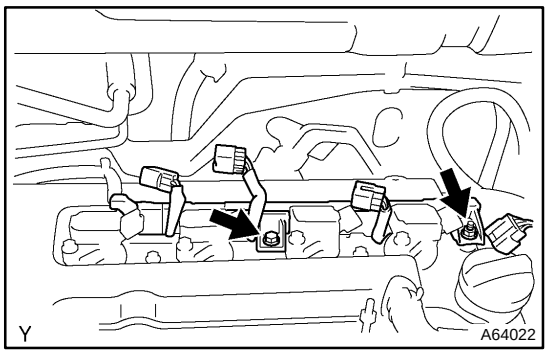

39. INSTALL ENGINE WIRE

(a) Install the engine wire with the bolt and nut.
Torque: 9.0 N·m (92 kgf·cm, 80 in.·lbf)

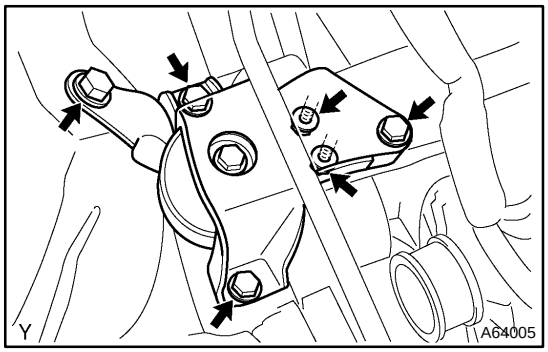

40. INSTALL ENGINE MOUNTING INSULATOR SUB–ASSY RH

(a) Install the engine mounting insulator with the 4 bolts and 2 nuts.
Torque: 52 N·m (530 kgf·cm, 38 ft·lbf)

41. INSTALL GENERATOR ASSY (See page 51–8)

42. INSTALL VANE PUMP ASSY (See page 51–8)

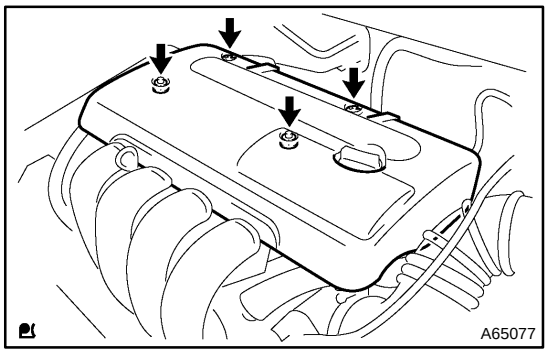

43. INSTALL CYLINDER HEAD COVER NO.2

(a) Install the cylinder head cover with the 2 nuts and 2 clips.
Torque: 7.0 N·m (71 kgf·cm, 62 in.·lbf)

44. INSTALL FRONT WHEEL RH
Torque: 103 N·m (1,050 kgf·cm, 76 ft·lbf)

45. ADD COOLANT (See page 16–7)

46. CHECK ENGINE COOLANT LEAK (See page 16–7)

47. CHECK ENGINE OIL LEAK

CYLINDER BLOCK ASSY (April, 2003)

140Q8–05

COMPONENTS

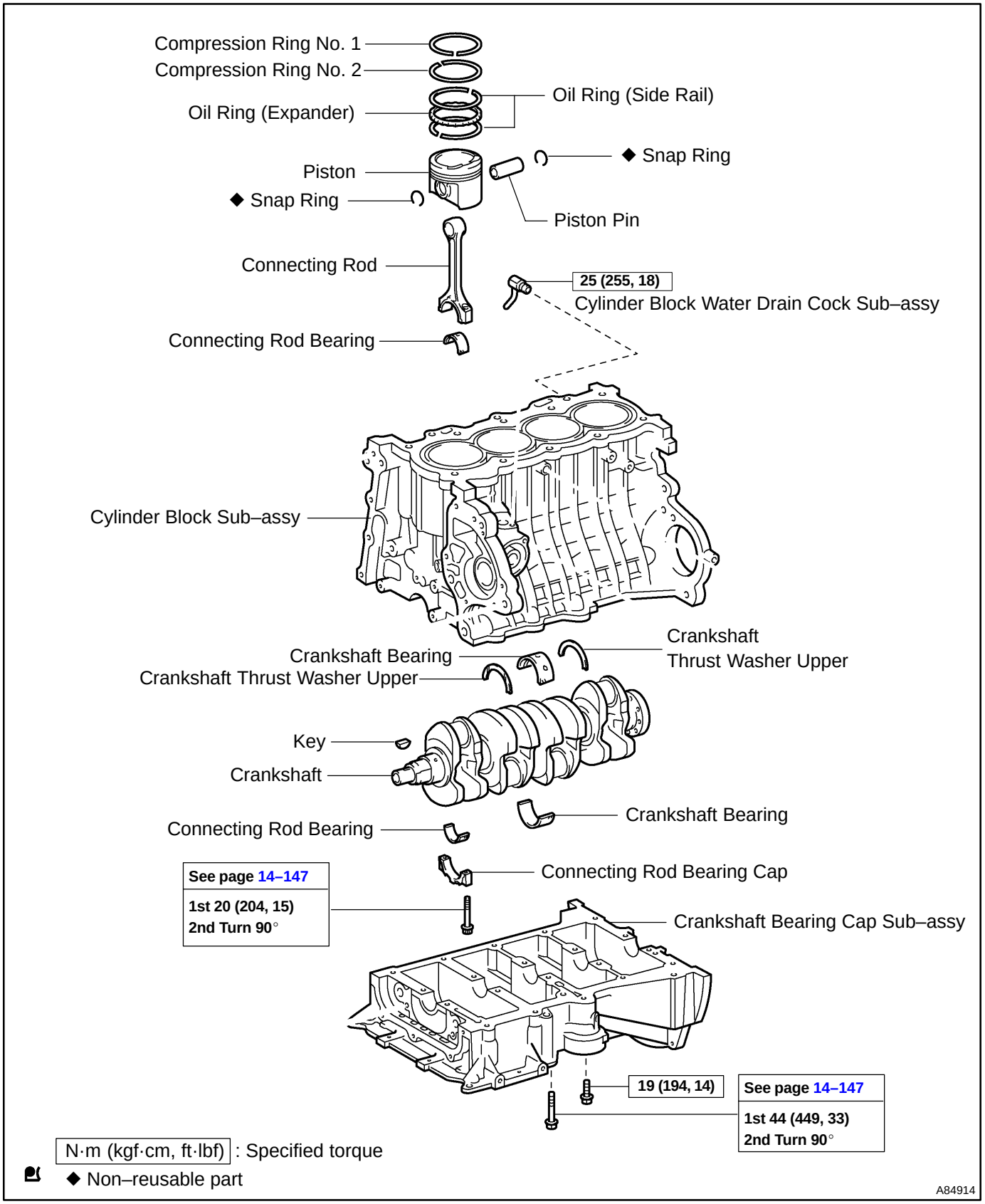

OVERHAUL

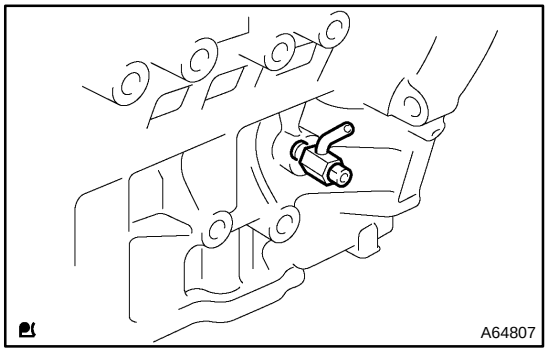

1. REMOVE CYLINDER BLOCK WATER DRAIN COCK SUB–ASSY

(a) Remove the cylinder block water drain cock from the cylinder block.

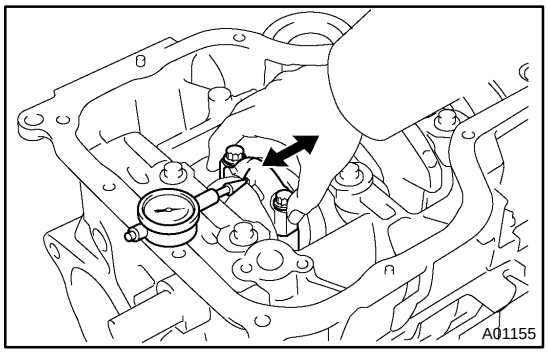

2. INSPECT CONNECTING ROD THRUST CLEARANCE

(a) Using a dial indicator, measure the thrust clearance while moving the connecting rod back and forth.

Standard thrust clearance:
0.160 to 0.342 mm (0.0063 to 0.0135 in.)
Maximum thrust clearance:
0.342 mm (0.0135 in.)

- If the thrust clearance is greater than maximum, replace the connecting rod.
- If necessary, replace the crankshaft.

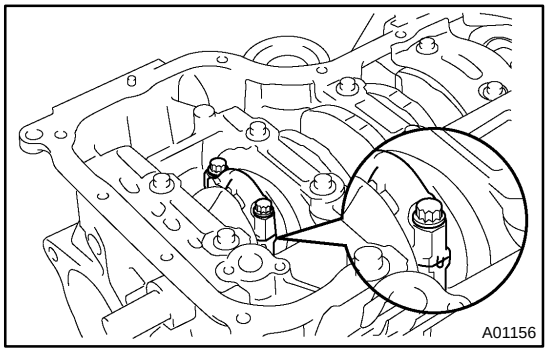

3. INSPECT CONNECTING ROD OIL CLEARANCE

NOTICE:

Do not turn the crankshaft.

(a) Using marking paint, write the matched cylinder number on each connecting rod and cap.

HINT:

The match marks on the connecting rods and caps are for ensuring correct reassembly.

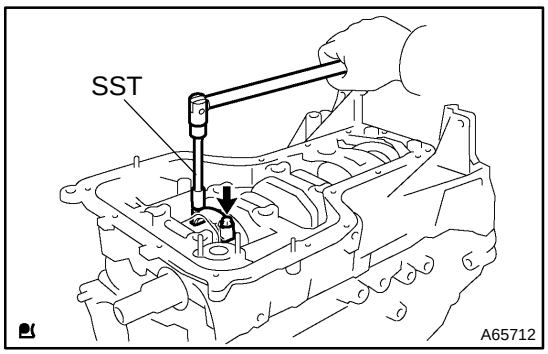

(b) Using SST, remove the 2 bolts and connecting rod cap.
SST 09205–16010

(c) Clean the crank pin and bearing.

(d) Check the crank pin and bearing for pitting and scratches.

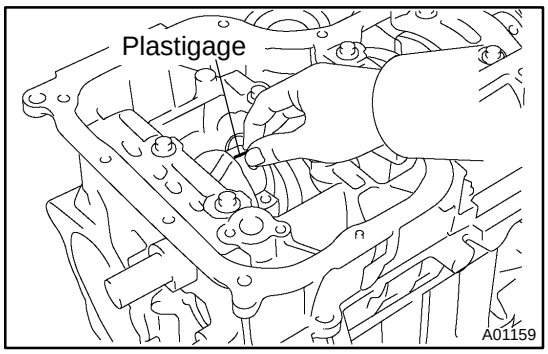

(e) Lay a strip of the Plastigage across the crank pin.

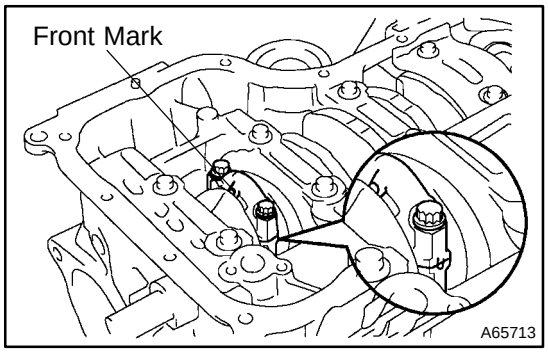

(f) Check that the front mark of the connecting rod cap is facing the correct direction.

(g) Apply a light coat of engine oil on the threads and under the heads of the connecting rod cap bolts.

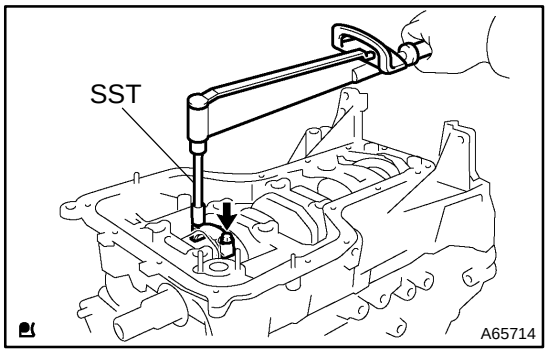

(h) Using SST, tighten the bolts in several passes by the specified torque.
SST 09205–16010
Torque: 20 N·m (204 kgf·cm, 15 ft·lbf)

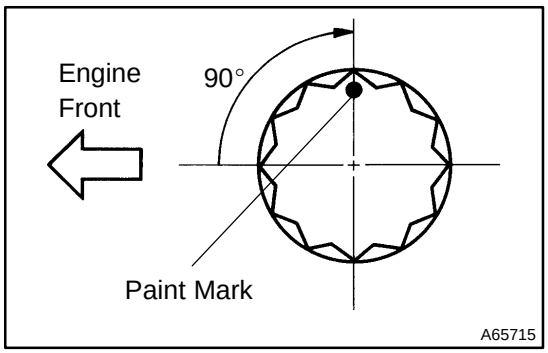

(i) Mark the front of the connecting cap bolts with paint.

(j) Retighten the cap bolts by 90° as shown in the illustration.

(k) Check that the crankshaft turns smoothly.

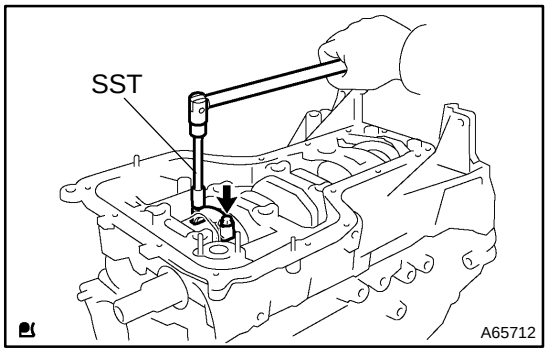

(l) Remove the 2 bolts and connecting rod cap.

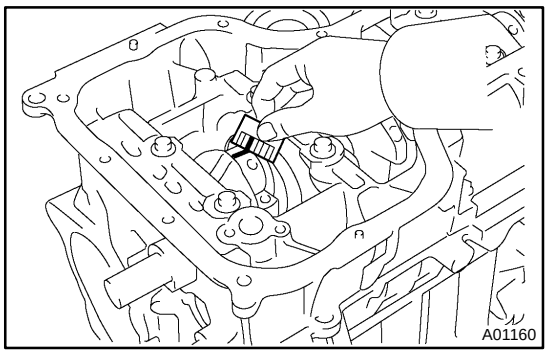

(m) Measure the Plastigage at its widest point.

Standard oil clearance:
0.028 to 0.060 mm (0.0011 to 0.0024 in.)
Maximum oil clearance: 0.080 mm (0.0031 in.)

NOTICE:

Remove the Plastigage completely after the measurement.

- If the oil clearance is greater than maximum, replace the connecting rod bearing.
- If necessary, grind or replace the crankshaft.

HINT:

If replacing a bearing, select a new one having the same number as marked on the connecting rod. There are 3 sizes of standard bearings, marked ”1”, ”2” and ”3” accordingly.

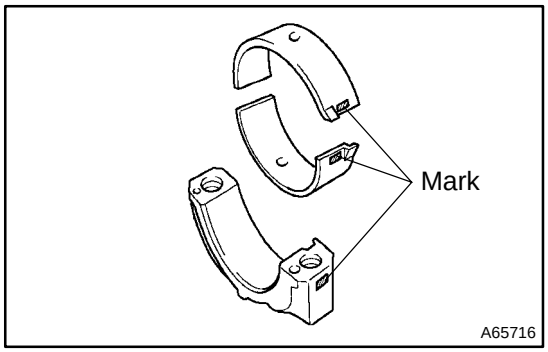

Item	Mark	mm (in.)
Connecting rod large end bore diameter	1 2 3	47.000 to 47.008 (1.8504 to 1.8507) 47.009 to 47.016 (1.8507 to 1.8510) 47.017 to 47.024 (1.8511 to 1.8513)
Connecting rod bearing thickness	1 2 3	1.486 to 1.490 (0.0585 to 0.0587) 1.491 to 1.494 (0.0587 to 0.0588) 1.495 to 1.498 (0.0589 to 0.0590)
Crankshaft pin outer diameter	–	43.992 to 44.000 (1.7320 to 1.7323)

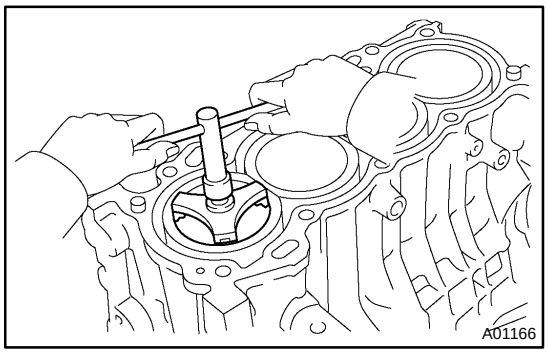

4. REMOVE CONNECTING ROD SUB–ASSY

(a) Using a ridge reamer, remove all the carbon from the top of the cylinder.

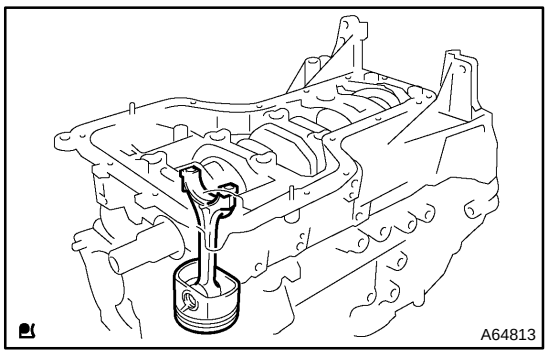

(b) Push the piston, connecting rod assembly and upper bearing through the top of the cylinder block.

HINT:

- Keep the bearing, connecting rod and cap together.
- Arrange the piston and connecting rod assemblies in the correct order.

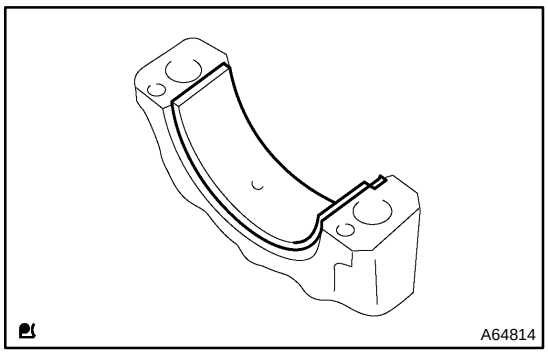

5. REMOVE CONNECTING ROD BEARING

(a) Remove the connecting rod bearing from the connecting rod cap.

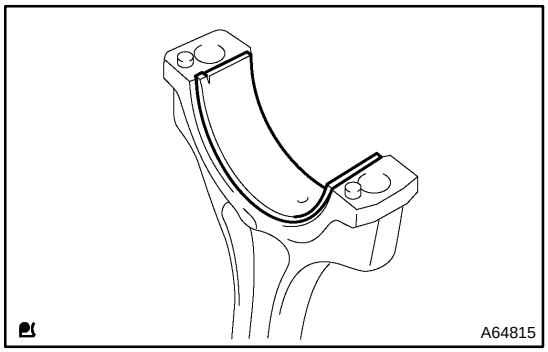

(b) Remove the connecting rod bearing from the connecting rod.

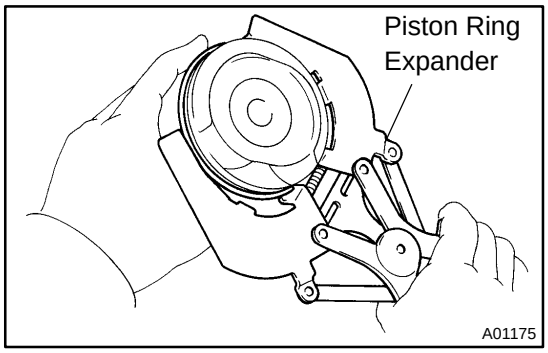

6. REMOVE PISTON RING SET

(a) Using a piston ring expander, remove the 2 compression rings.

(b) Remove the 2 side rails and oil ring by hand.

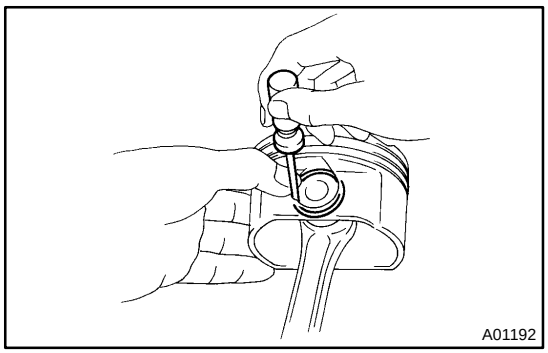

7. REMOVE W/PIN PISTON SUB–ASSY

(a) Using a small screwdriver, pry out the 2 snap rings.

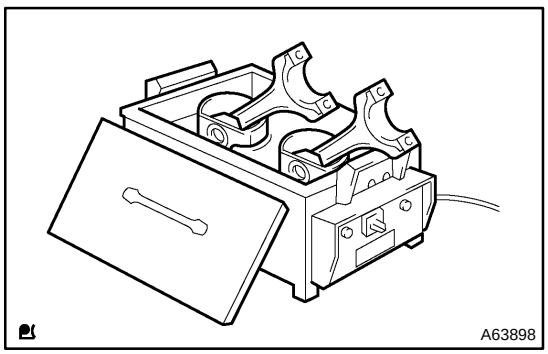

(b) Heat the piston to 80 to 90°C (176 to 194°F).

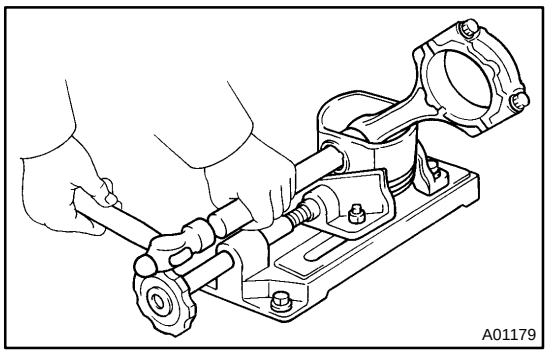

(c) Using a plastic hammer and brass bar, lightly tap out the piston pin, then remove the connecting rod.

HINT:

- The piston and pin are a matched set.
- Arrange the piston, pin, ring, connecting rod and bearings in the correct order.

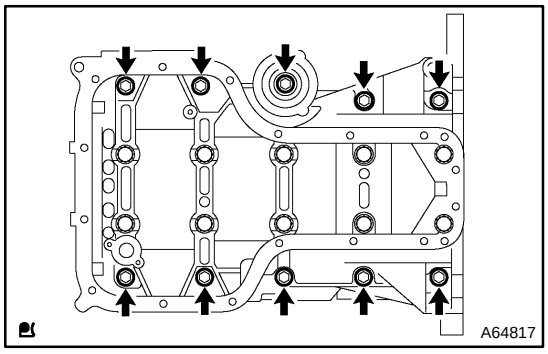

8. REMOVE CRANKSHAFT

(a) Remove the 10 bolts.

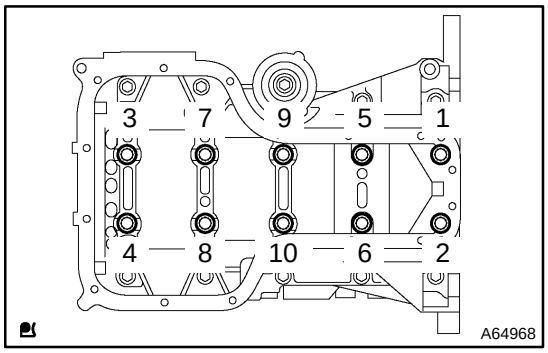

(b) Uniformly loosen the 10 bearing cap bolts, in several passes, in the sequence shown in the illustration.

SST 09011–38121

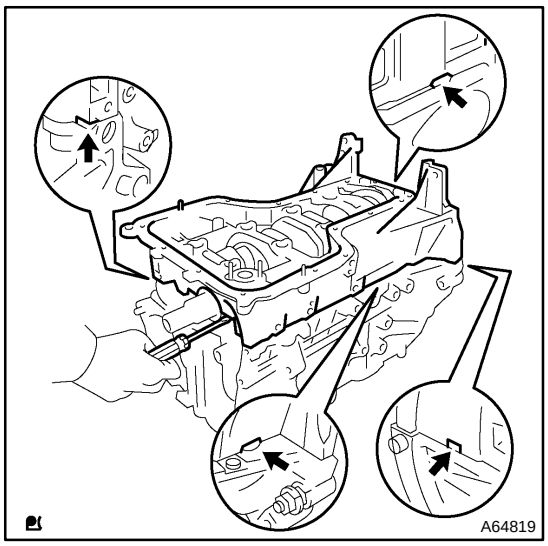

(c) Using a screwdriver, remove the bearing cap by prying the indicated portions between the cylinder block and bearing cap.

NOTICE:

Be careful not to damage the contact surfaces of the cylinder block and bearing cap.

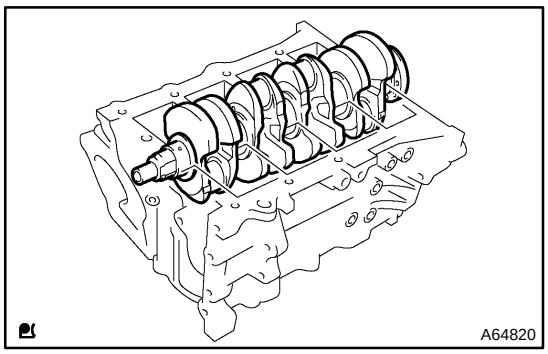

(d) Remove the crankshaft from the cylinder block.

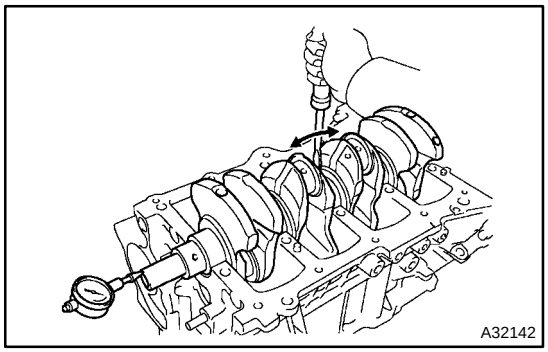

9. INSPECT CRANKSHAFT THRUST CLEARANCE

(a) Using a dial indicator, measure the thrust clearance while prying the crankshaft back and forth with a screwdriver.

Standard thrust clearance:
0.04 to 0.24 mm (0.0016 to 0.0094 in.)
Maximum thrust clearance: 0.30 mm (0.0118 in.)

- If the thrust clearance is greater than maximum, measure the thrust washer thickness.
- If the thickness is not specified, replace the thrust washer.

HINT:
Thrust washer thickness: 2.430 to 2.480 mm (0.0957 to 0.0976 in.).

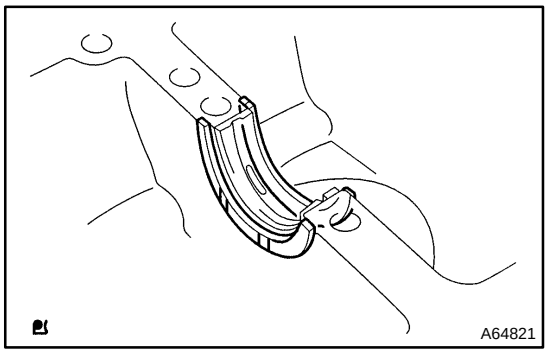

10. REMOVE CRANKSHAFT THRUST WASHER UPPER

(a) Remove the 2 crankshaft thrust washers from the cylinder block.

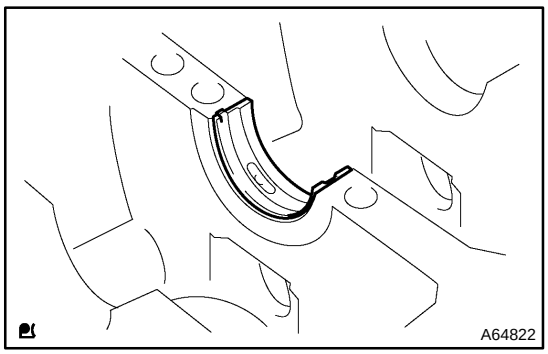

11. REMOVE CRANKSHAFT BEARING

(a) Remove the 5 crankshaft bearings from the cylinder block.

NOTICE:
Arrange the main bearings and thrust washers in the correct order.

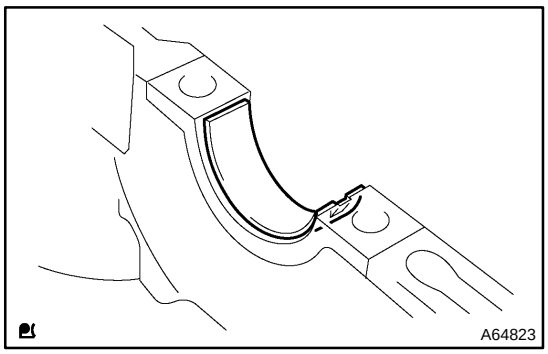

(b) Remove the 5 crankshaft bearings from the bearing cap.

NOTICE:

Arrange the main bearings and thrust washers in the correct order.

12. REMOVE STUD BOLT

(a) Using torx socket wrench E5 and E7, remove the 9 stud bolts.

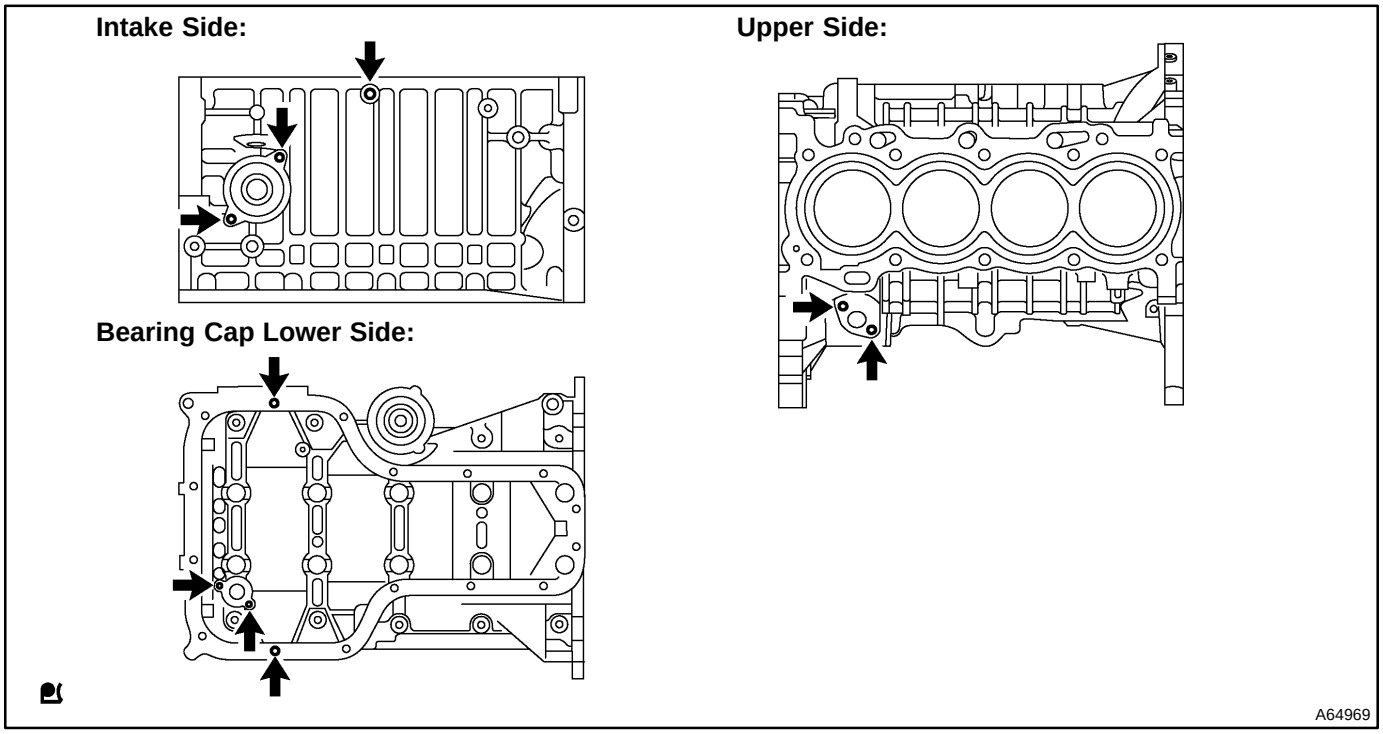

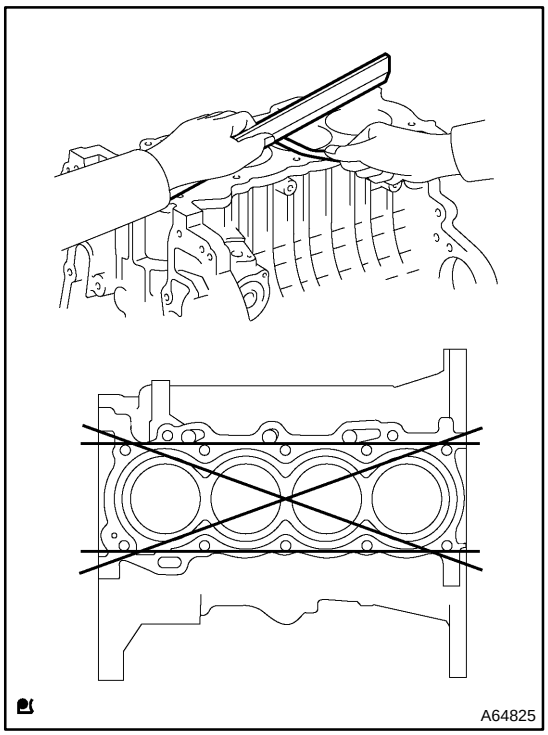

13. INSPECT CYLINDER BLOCK FOR FLATNESS

(a) Using a precision straight edge and feeler gauge, measure the surface contacting the cylinder head gasket for warpage.

Maximum warpage: 0.05 mm (0.0020 in.)

If the warpage is greater than maximum, replace the cylinder block.

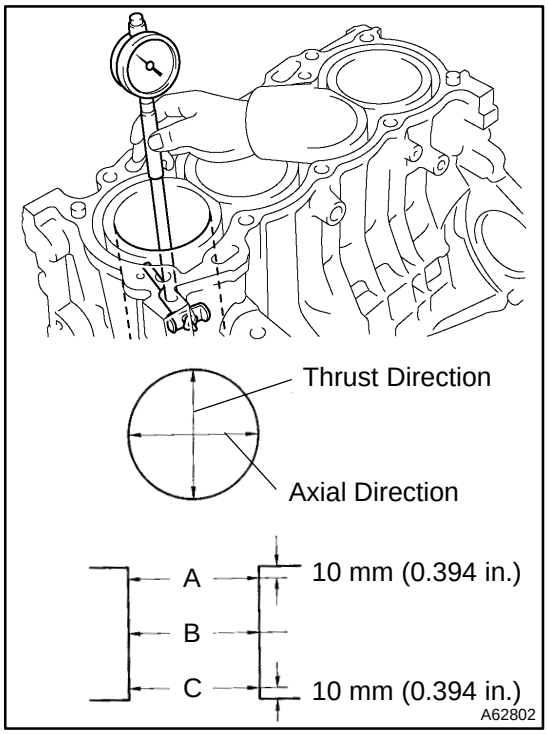

14. INSPECT CYLINDER BORE

(a) Using a cylinder gauge, measure the cylinder bore diameter at positions A, B and C in the thrust and axial directions.

Standard diameter:
79.000 to 79.013 mm (3.1102 to 3.1107 in.)

(b) Calculate the difference between the maximum diameter and minimum diameter of the 6 measured values.

Difference limit: 0.10 mm (0.0039 in.)

If the difference is greater than limit, replace the cylinder block.

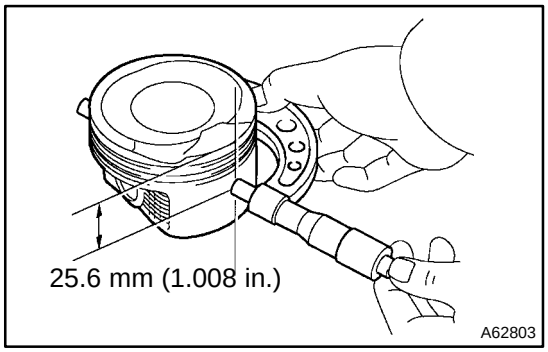

15. INSPECT W/PIN PISTON SUB–ASSY

(a) Using a micrometer, measure the piston diameter at a right angle to the piston pin hole, and at the piston of 25.6 mm (1.008 in.) from the piston head.

Piston diameter:
78.872 to 78.972 mm (3.1052 to 3.1091 in.)

16. INSPECT PISTON OIL CLEARANCE

(a) Subtract the piston diameter measurement from the cylinder bore diameter measurement.
Standard oil clearance: 0.065 to 0.088 mm (0.0026 to 0.0035 in.)
Maximum oil clearance: 0.088 mm (0.0035 in.)

- If the oil clearance is greater than maximum, replace all the pistons.
- If necessary, replace the cylinder block.

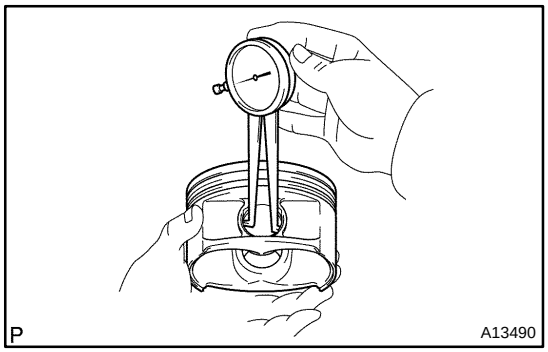

17. INSPECT PISTON PIN OIL CLEARANCE

(a) Using a caliper gauge, measure the piston pin bore diameter.
Piston pin bore diameter:
20.006 to 20.015 mm (0.7876 to 0.7880 in.)

Mark	mm (in.)
A	20.006 to 20.009 (0.7876 to 0.7878)
B	20.010 to 20.012 (0.7878 to 0.7879)
C	20.013 to 20.015 (0.7879 to 0.7880)

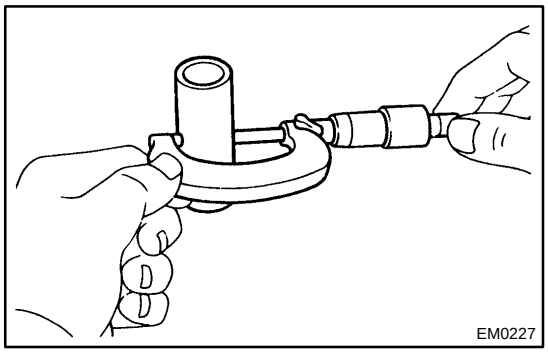

(b) Using a micrometer, measure the piston pin outer diameter.
Piston pin outer diameter:
20.004 to 20.013 mm (0.7876 to 0.7879 in.)

Mark	mm (in.)
A	20.004 to 20.007 (0.7876 to 0.7877)
B	20.008 to 20.010 (0.7877 to 0.7878)
C	20.011 to 20.013 (0.7878 to 0.7879)

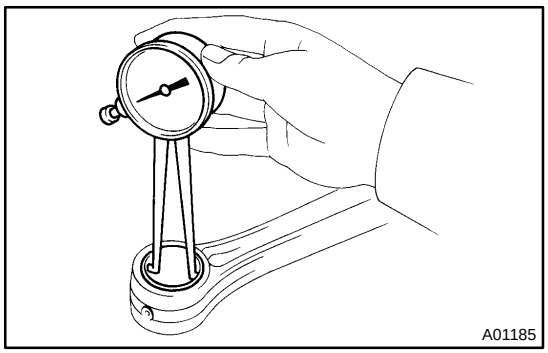

(c) Using a caliper gauge, measure the connecting rod small end bore diameter.
Connecting rod small end bore diameter:
20.012 to 20.021 mm (0.7879 to 0.7882 in.)

Mark	mm (in.)
A	20.012 to 20.015 (0.7879 to 0.7880)
B	20.016 to 20.018 (0.7880 to 0.7881)
C	20.019 to 20.021 (0.7881 to 0.7882)

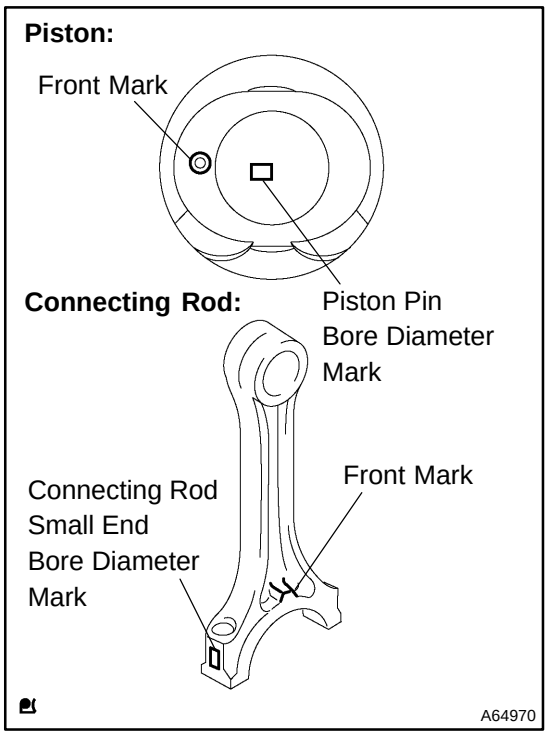

(d) Subtract the piston pin outer diameter measurement from the piston pin bore diameter measurement.
Standard oil clearance:
0.002 to 0.011 mm (0.0001 to 0.0004 in.)
Maximum oil clearance: 0.011 mm (0.0004 in.)
- If the oil clearance is greater than maximum, replace the connecting rod.
- If necessary, replace the w/ pin piston.

(e) Subtract the piston pin outer diameter measurement from the connecting rod small end bore diameter measurement.
Standard oil clearance:
–0.001 to 0.017 mm (–0.00004 to 0.0007 in.)
Maximum oil clearance: 0.017 mm (0.0007 in.)
- If the oil clearance is greater than maximum, replace the connecting rod.
- If necessary, replace the connecting rod and w/ pin piston.

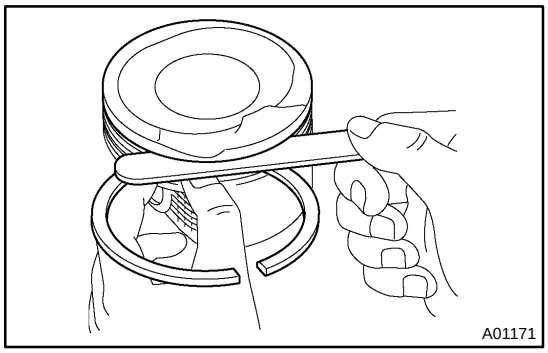

18. INSPECT RING GROOVE CLEARANCE

(a) Using a feeler gauge, measure the clearance between the new piston ring and the wall of the ring groove.
Ring groove clearance:
0.02 to 0.07 mm (0.0008 to 0.0028 in.) for No. 1 ring
0.03 to 0.07 mm (0.0012 to 0.0028 in.) for No. 2 ring
0.03 to 0.11 mm (0.0012 to 0.0043 in.) for oil ring

If the groove clearance is not as specified, replace the piston ring.

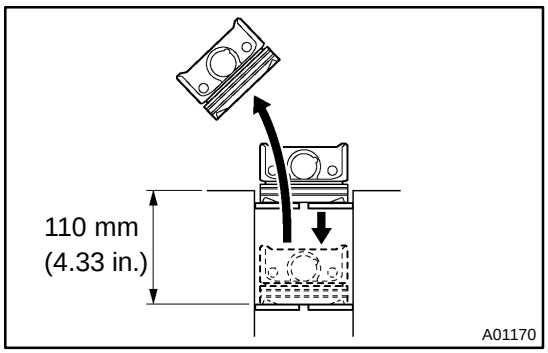

19. INSPECT PISTON RING END GAP

(a) Using a piston, push the piston ring a little beyond the bottom of the ring travel, that means 110 mm (4.33 in.) from the top of the cylinder block.

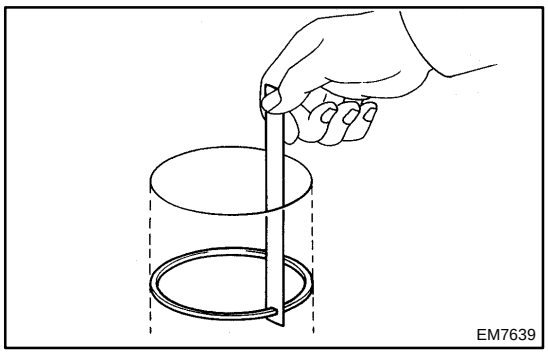

(b) Using a feeler gauge, measure the end gap.
Standard end gap:
0.25 to 0.35 mm (0.0098 to 0.0138 in.) for No. 1 ring
0.35 to 0.50 mm (0.0138 to 0.0197 in.) for No. 2 ring
0.15 to 0.40 mm (0.0059 to 0.0157 in.) for oil ring
Maximum end gap:
1.05 mm (0.0413 in.) for No. 1 ring
1.20 mm (0.0472 in.) for No. 2 ring
- If the end gap is greater than maximum, replace the piston ring.
- If the end gap is greater than maximum, even with a new piston ring, replace the cylinder block.

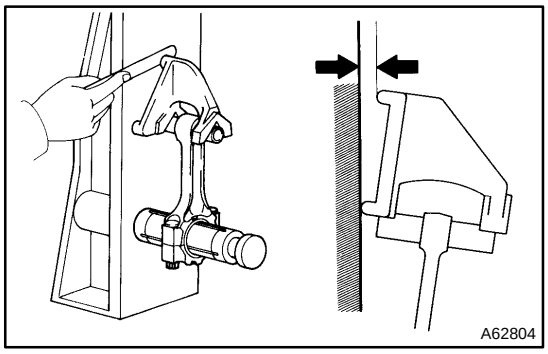

20. INSPECT CONNECTING ROD SUB–ASSY
(a) Using a connecting rod aligner and feeler gauge, check the connecting rod alignment.
(1) Check for out–of–alignment.
Maximum out–of–alignment:
0.05 mm (0.0020 in.) per 100 mm (3.94 in.)
If out–of–alignment is greater than maximum, replace the connecting rod assembly.

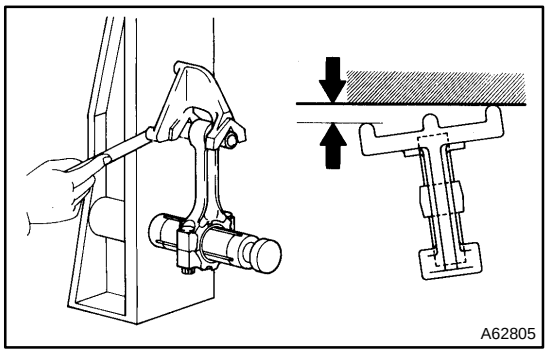

(2) Check for twist.
Maximum twist:
0.05mm (0.0020 in.) per 100 mm (3.94 in.)
If twist is greater than maximum, replace the connecting rod assembly.

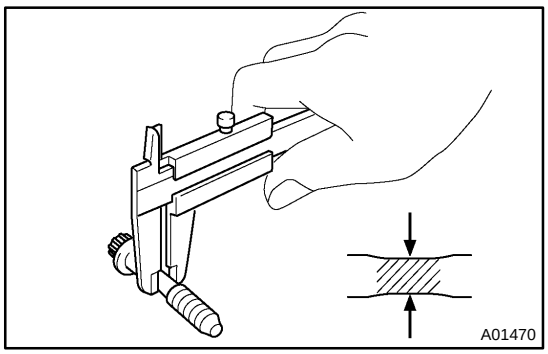

21. INSPECT CONNECTING ROD BOLT
(a) Using a vernier caliper, measure the tension portion diameter of the bolts.
Standard diameter:
6.6 to 6.7 mm (0.260 to 0.264 in.)
Maximum diameter: 6.4 mm (0.252 in.)
If the diameter is less than maximum, replace the connecting rod bolt.

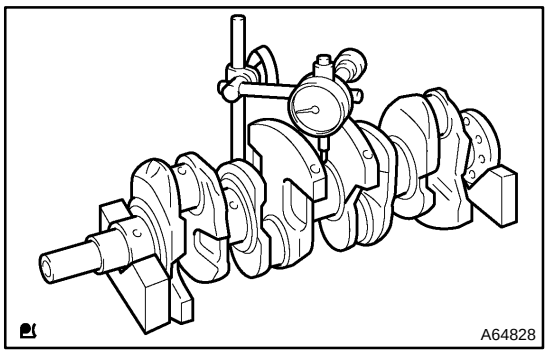

22. INSPECT CRANKSHAFT

(a) Using a dial indicator and V–blocks, measure the circle runout, as shown in the illustration.

Maximum circle runout: 0.03 mm (0.0012 in.)

If the circle runout is greater than maximum, replace the crankshaft.

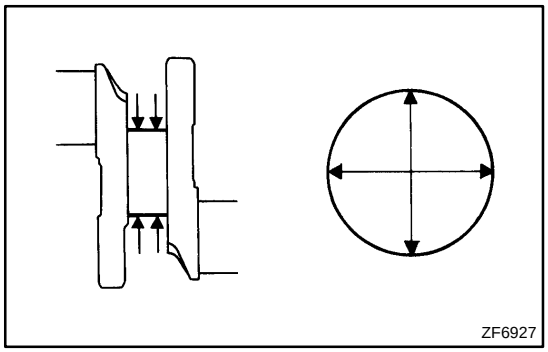

(b) Using a micrometer, measure the diameter of each main journal at the points shown in the illustration.

Diameter: 47.988 to 48.000 mm (1.8893 to 1.8898 in.)

If the diameter is not as specified, check the crankshaft oil clearance.

(c) Check each main journal for taper and out–of–round as shown.

Maximum taper and out–of–round:
0.02 mm (0.0008 in.)

If the taper and out–of–round is greater than maximum, replace the crankshaft.

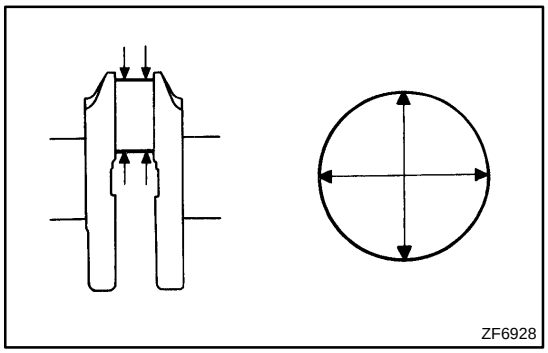

(d) Using a micrometer, measure the diameter of each crank pin at the points shown in the illustration.

Diameter: 43.992 to 44.000 mm (1.7320 to 1.7323 in.)

If the diameter is not as specified, check the connecting rod oil clearance.

(e) Check each crank pin for taper and out–of–round as shown.

Maximum taper and out–of–round:
0.02 mm (0.0008 in.)

If the taper and out–of–round is greater than maximum, replace the crankshaft.

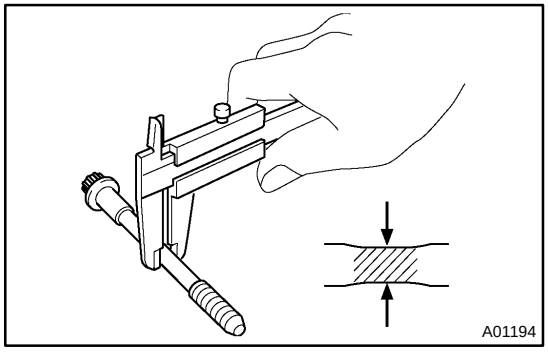

23. INSPECT CRANKSHAFT BEARING CAP SET BOLT

(a) Using a vernier caliper, measure the tension portion diameter of the bolts.

Standard diameter: 7.3 to 7.5 mm (0.287 to 0.295 in.)
Minimum diameter: 7.3 mm (0.287 in.)

If the diameter is greater than minimum, replace the crankshaft bearing cap set bolt.

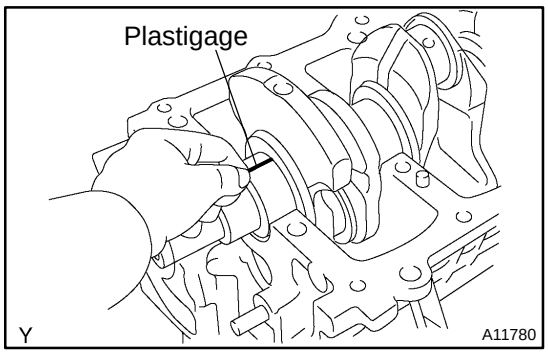

24. INSPECT CRANKSHAFT OIL CLEARANCE

NOTICE:

Do not turn the crankshaft.

(a) Clean each main journal and bearing.

(b) Place the crankshaft on the cylinder block.

(c) Lay a strip of the Plastigage across each journal.

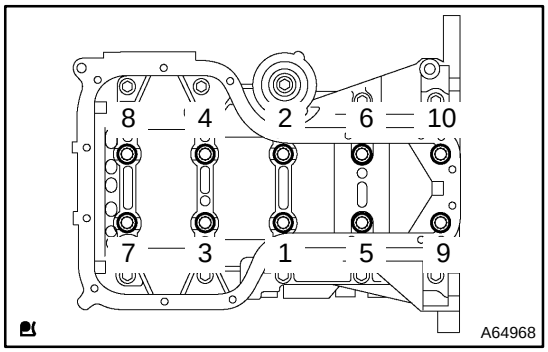

(d) Using SST, tighten the bolts in several passes, in the sequence shown, by the specified torque.
SST 09011–38121
Torque: 44 N·m (449 kgf·cm, 33 ft·lbf)

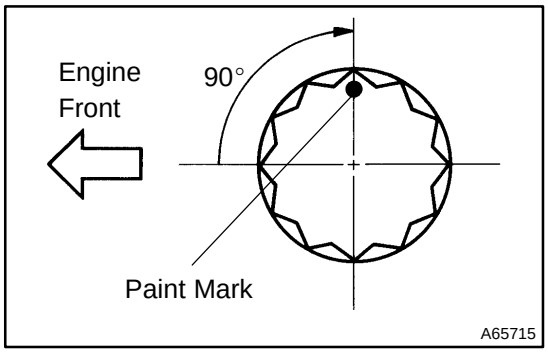

(e) Mark the front of the bearing cap bolts with paint.

(f) Retighten the bearing cap bolts by 90° as shown in the illustration.

(g) Check that the painted mark is now at a 90° angle to the front.

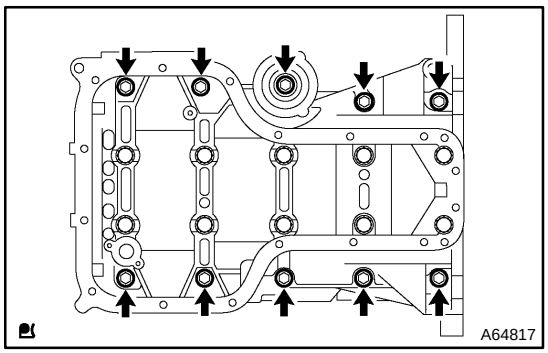

(h) Tighten the other 10 bolts for the bearing cap.
Torque: 19 N·m (194 kgf·cm, 14 ft·lbf)

(i) Remove the 10 bolts.

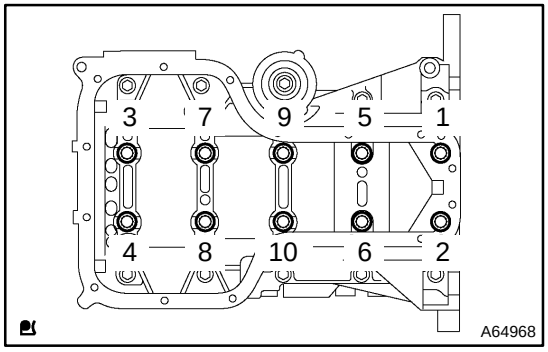

(j) Uniformly loosen the 10 bearing cap bolts, in several passes, in the sequence shown in the illustration.
SST 09011–38121

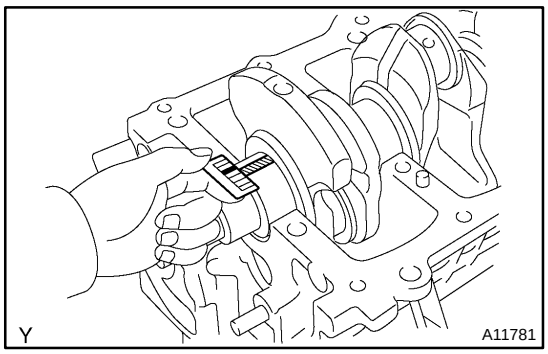

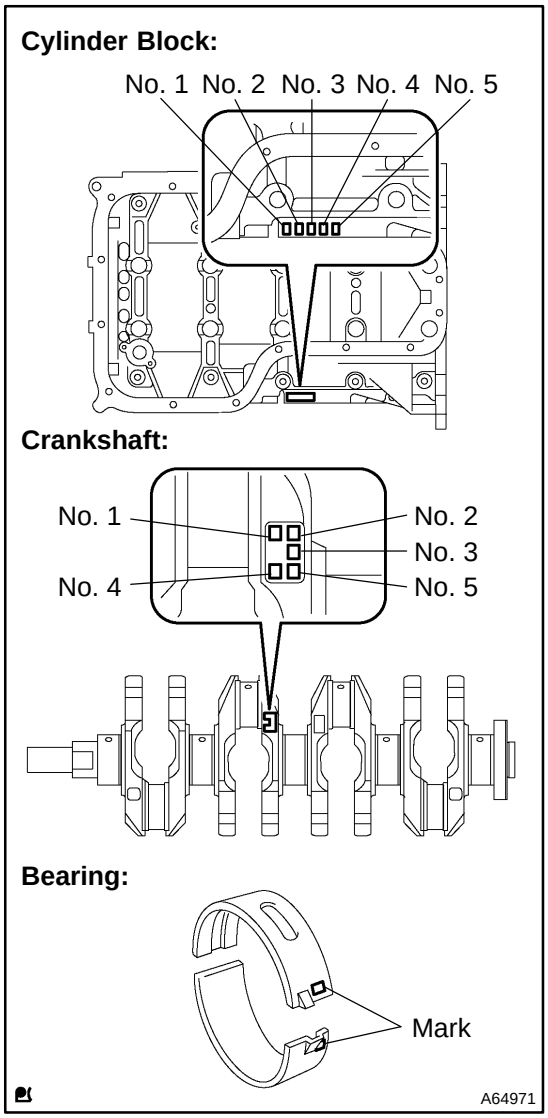

(k) Measure the Plastigage at its widest point.

Standard oil clearance:
0.015 to 0.032 mm (0.0006 to 0.0013 in.)
Minimum oil clearance: 0.05 mm (0.0020 in.)

NOTICE:

Completely remove the Plastigage.

- If the oil clearance is greater than minimum, replace the crankshaft bearing.
- If necessary, replace the crankshaft.

HINT:

If replacing a bearing, select a new one having the same number. If the number of the bearing cannot be determined, calculate the correct bearing number by adding together the numbers imprinted on the cylinder block and crankshaft, then select a new bearing having the calculated number. There are 4 sizes of standard bearings, marked ”1”, ”2”, ”3” and ”4” accordingly.

Cylinder block (A) + Crankshaft (B)	0 to 2	3 to 5	6 to 8	9 to 11
Use bearing	”1”	”2”	”3”	”4”

EXAMPLE:

Cylinder block ”3” (A) + Crankshaft ”4” (B) = Total number 7 (Use bearing ”3”)

Item	Mark	mm (in.)
Cylinder block journal bore diameter (A)	”0”	52.000 to 52.002 (2.0472 to 2.0473)
	”1”	52.003 to 52.004 (2.0474 to 2.0474)
	”2”	52.005 to 52.006 (2.0474 to 2.0475)
	”3”	52.007 to 52.009 (2.0475 to 2.0476)
	”4”	52.010 to 52.011 (2.0476 to 2.0477)
	”5”	52.012 to 52.013 (2.0477 to 2.0478)
	”6”	52.014 to 52.015 (2.0478 to 2.0478)
Crankshaft journal diameter (B)	”0”	47.999 to 48.000 (1.8897 to 1.8898)
	”1”	47.997 to 47.998 (1.8896 to 1.8897)
	”2”	47.995 to 47.996 (1.8896 to 1.8896)
	”3”	47.993 to 47.994 (1.8895 to 1.8895)
	”4”	47.991 to 47.992 (1.8894 to 1.8894)
	”5”	47.988 to 47.990 (1.8893 to 1.8894)
Standard bearing center wall thickness	”1”	1.994 to 1.997 (0.0785 to 0.0786)
	”2”	1.998 to 2.000 (0.0787 to 0.0787)
	”3”	2.001 to 2.003 (0.0788 to 0.0789)
	”4”	2.004 to 2.006 (0.0789 to 0.0790)

25. INSTALL STRAIGHT PIN

(a) Using a plastic hammer, install the 9 straight pins to the cylinder block.

Standard protrusion:
5 mm (0.197 in.) for straight pin A
7.5 mm (0.295 in.) for straight pin B
12 mm (0.472 in.) for straight pin C
8 mm (0.315 in.) for straight pin D

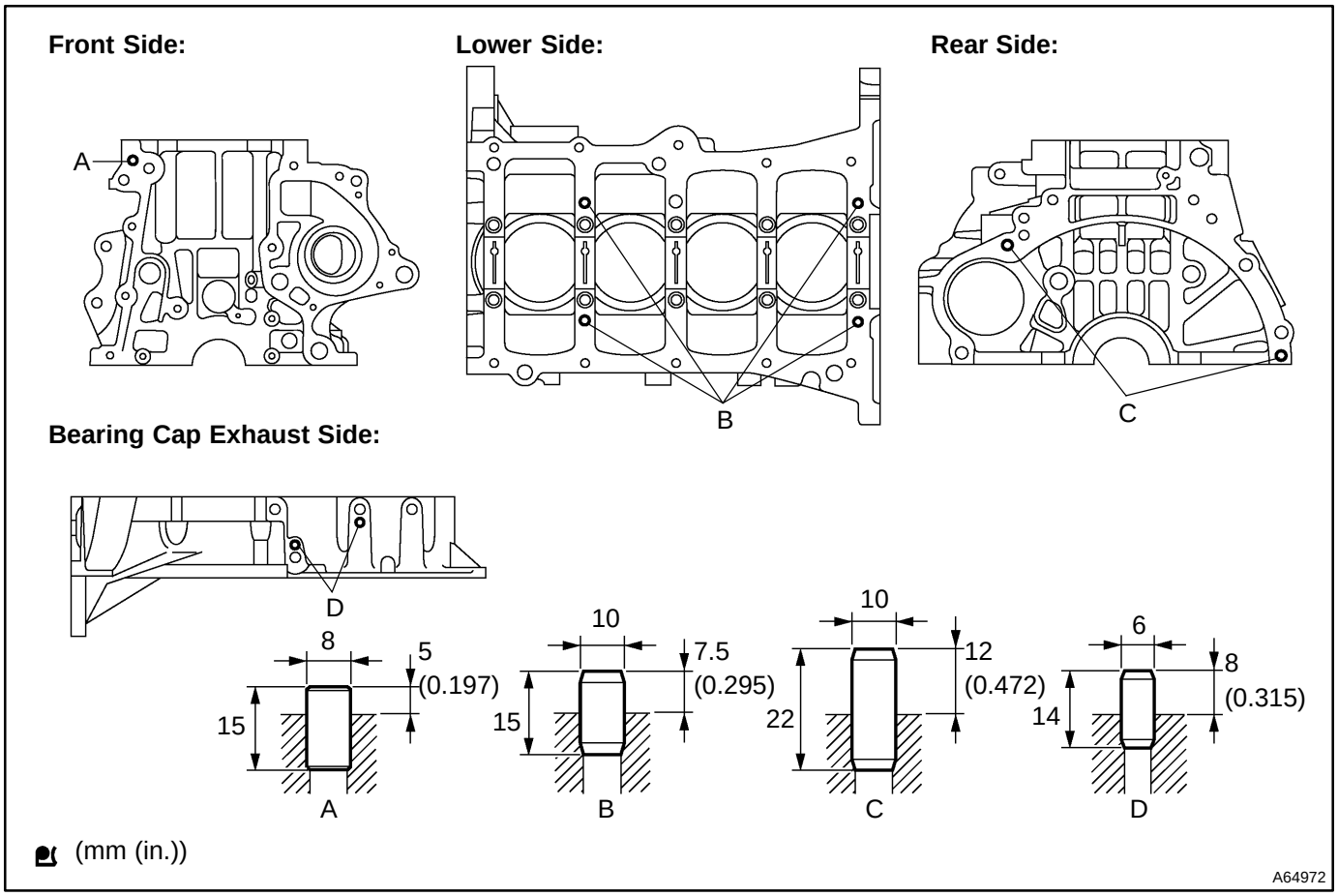

26. INSTALL RING PIN

(a) Using a plastic hammer, install the 5 ring pins to the cylinder block.

Standard protrusion:
6 mm (0.236 in.) for ring pin A
7 mm (0.276 in.) for rIng pin B
10 mm (0.394 in.) for ring pin C

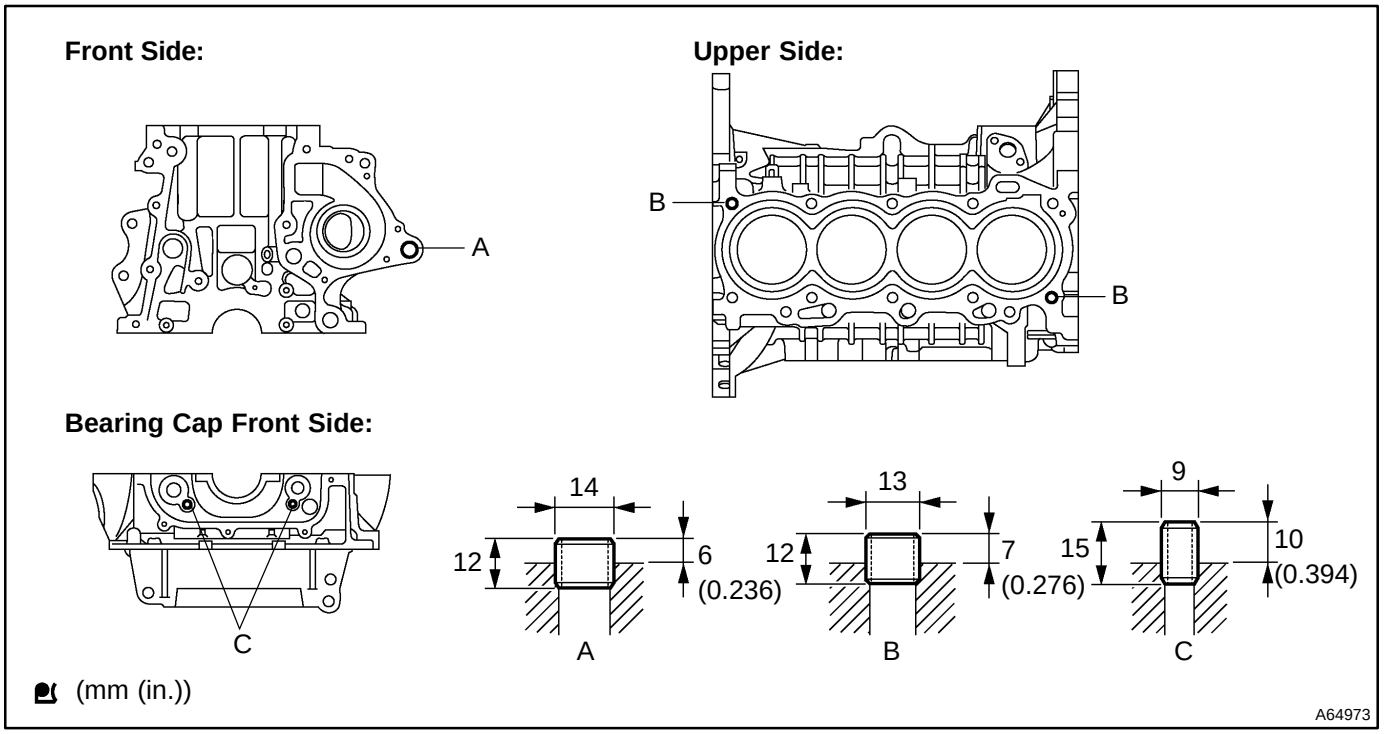

27. INSTALL STUD BOLT

(a) Using torx socket wrench E5 and E7, install the 9 stud bolt to the cylinder block.

Torque:

5.0 N·m (51 kgf·cm, 44 in.·lbf) for stud bolt A, C, D and E

11 N·m (112 kgf·cm, 8 ft·lbf) for stud bolt B

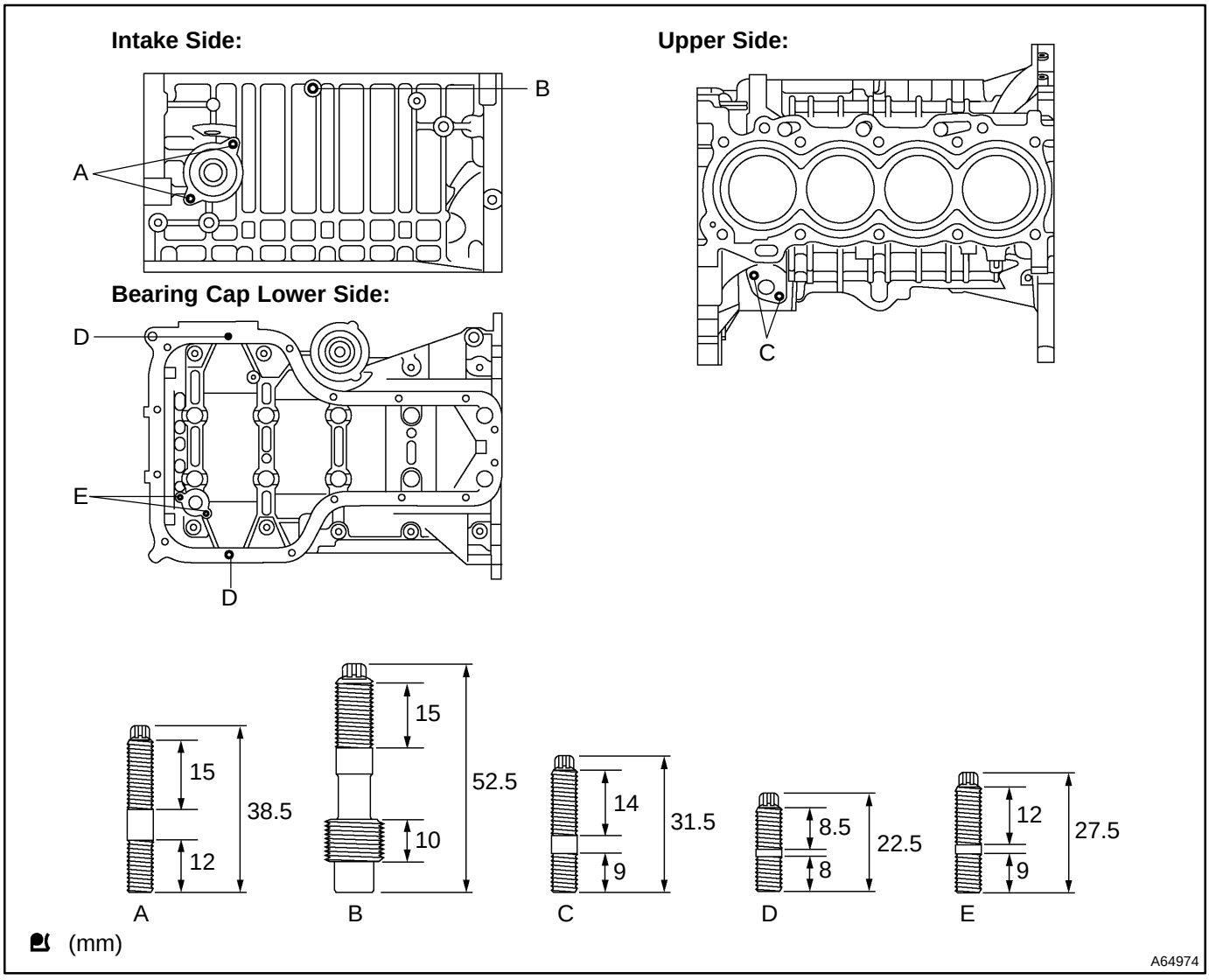

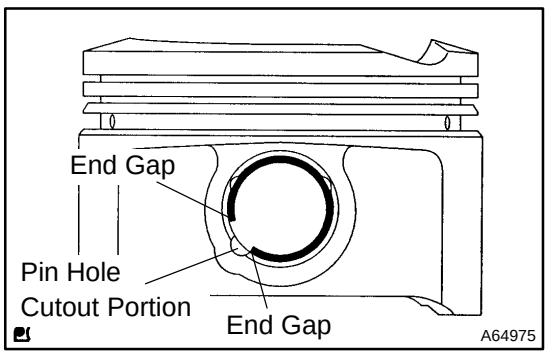

28. INSTALL W/PIN PISTON SUB–ASSY

(a) Using a small screwdriver, install a new snap ring at one end of the piston pin hole.

HINT:

Be sure that end the gap of the snap ring is aligned with the pin hole cutout portion of the piston.

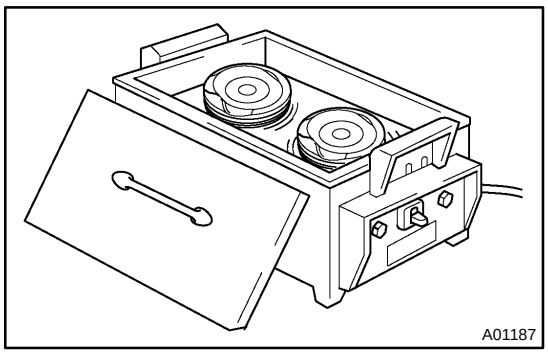

(b) Heat the piston to 80 to 90°C (176 to 194°F).

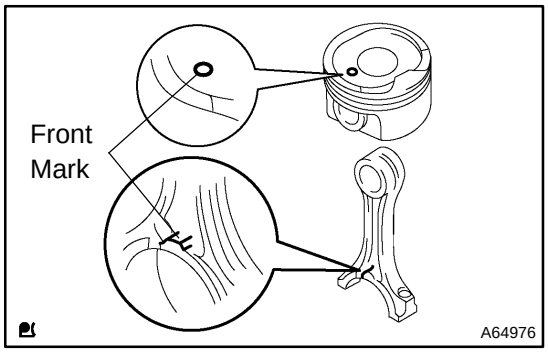

(c) Align the front marks on the piston with connecting rod, then push in the piston with your thumb.

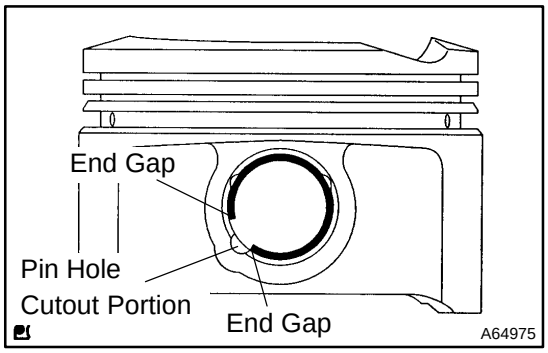

(d) Using a small screwdriver, install a new snap ring at one end of the piston pin hole.

HINT:

Be sure that the end gap of the snap ring is aligned with the pin hole cutout portion of the piston.

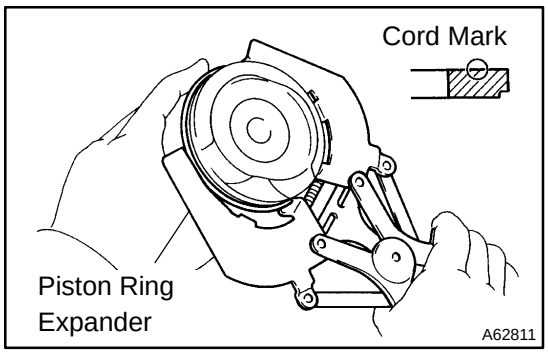

29. INSTALL PISTON RING SET

HINT:

In case of reusing the piston rings, install them to the matched pistons with the surfaces facing correctly.

(a) Install the oil ring expander and 2 side rails by hand.

(b) Using a piston ring expander, install the 2 compression rings with the code mark facing upward.

Code mark (No. 2 only): 2R

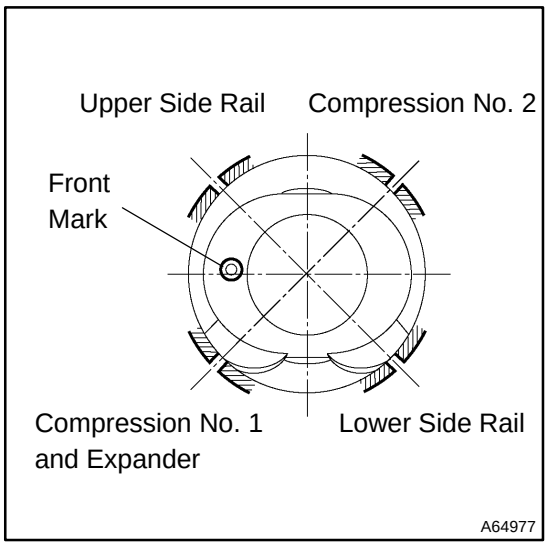

(c) Position the piston rings so that the ring ends are as shown.

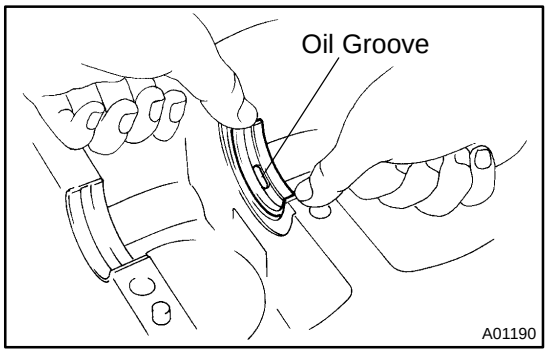

30. INSTALL CRANKSHAFT BEARING

(a) Install the upper bearing with the oil groove on the cylinder block.

NOTICE:

Do not apply engine oil to the bearing and its contact surface.

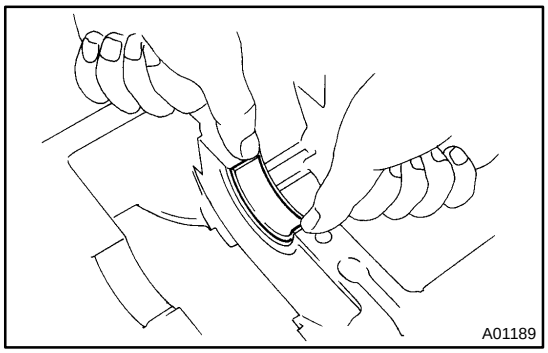

(b) Install the lower bearing on the bearing cap.

NOTICE:

Do not apply engine oil to the bearing and its contact surface.

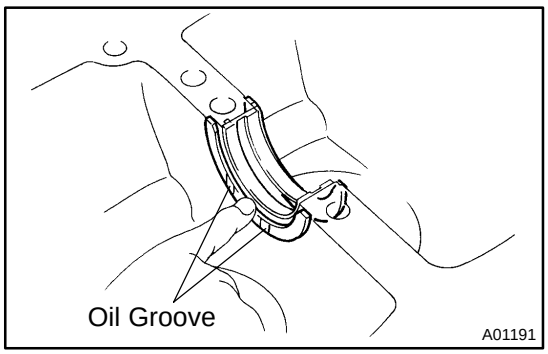

31. INSTALL CRANKSHAFT THRUST WASHER UPPER

(a) Install the 2 thrust washers under the No. 3 journal position of the cylinder block with the oil grooves facing outward.

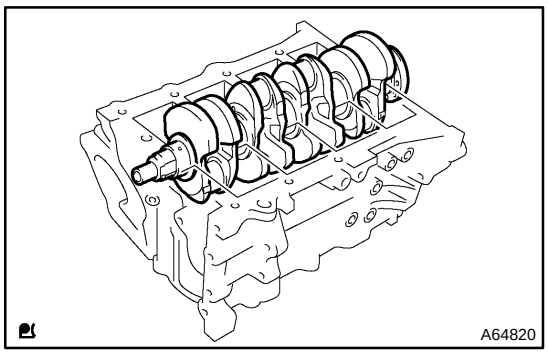

32. INSTALL CRANKSHAFT

(a) Apply engine oil to the upper bearing, then install the crankshaft on the cylinder block.

(b) Apply a light coat of engine oil on the bolt threads, bolt seats, and bearings of the bearing cap.

(c) Install the crankshaft to the cylinder block.

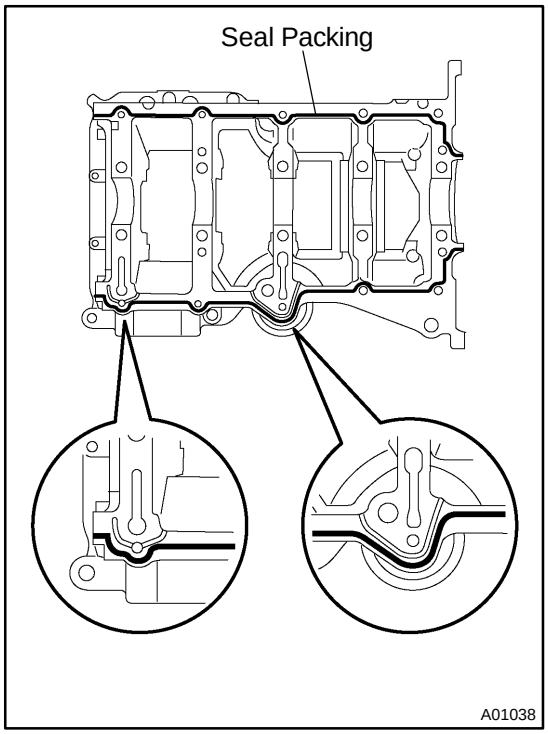

(d) Apply the seal packing in the shape of the bead (Diameter 2.5 to 3.5 mm (0.098 to 0.138 in.) consequently as shown in the illustration.

Seal packing: Part No. 08826–00080 or equivalent

NOTICE:

- **Remove any oil from the contact surface.**
- **Install the bearing cap sub–assembly within 3 minutes after applying the seal packing.**
- **Do not put into engine oil within 2 hours of installation.**

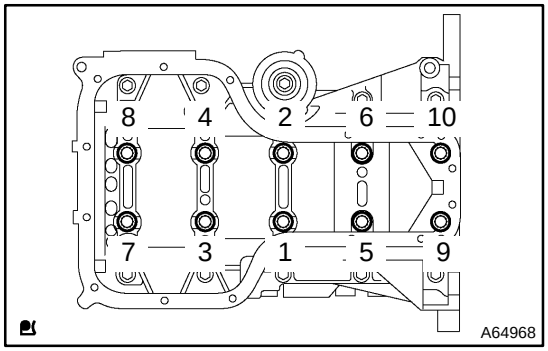

(e) Using SST, tighten the bolts in several passes, in the sequence shown, by the specified torque.

SST 09011–38121

Torque: 44 N·m (449 kgf·cm, 33 ft·lbf)

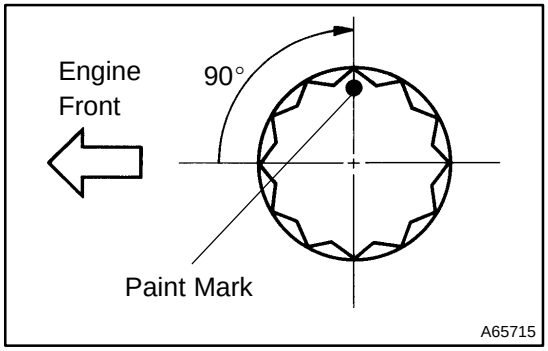

(f) Mark the front of the bearing cap bolts with paint.

(g) Retighten the bearing cap bolts by 90° as shown in the illustration.

(h) Check that the painted mark is now at a 90° angle to the front.

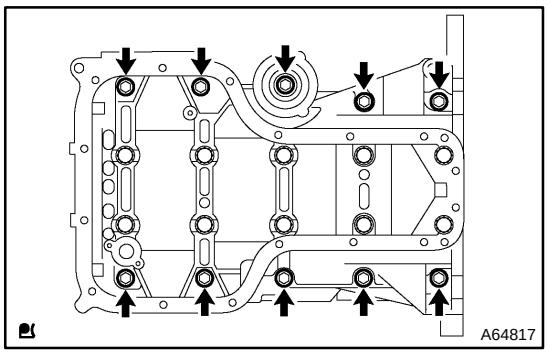

(i) Tighten the other 10 bolts for the bearing cap.
Torque: 19 N·m (194 kgf·cm, 14 ft·lbf)

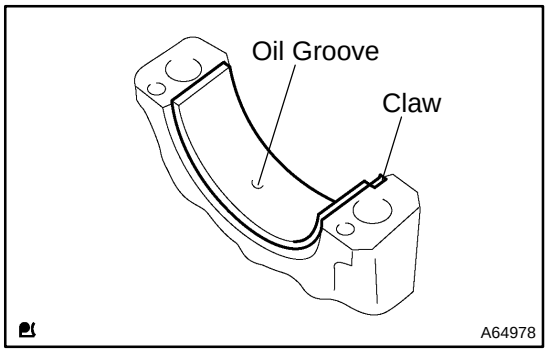

33. INSTALL CONNECTING ROD BEARING

(a) Align the connecting rod bearing claw with the oil groove of the connecting rod cap.

(b) Install the connecting rod bearing in the connecting rod cap.

NOTICE:

Do not apply engine oil to the bearing and its contact surface.

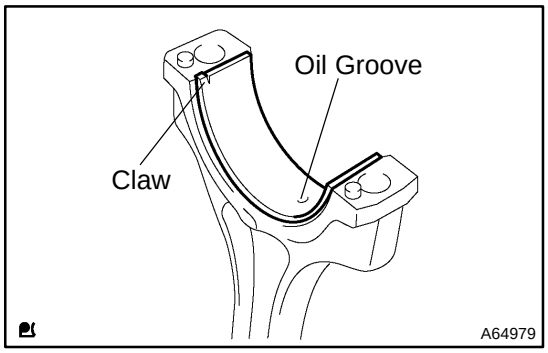

(c) Align the connecting rod bearing claw with the oil groove of the connecting rod.

(d) Install the connecting rod bearing in the connecting rod.

NOTICE:

Do not apply engine oil to the bearing and its contact surface.

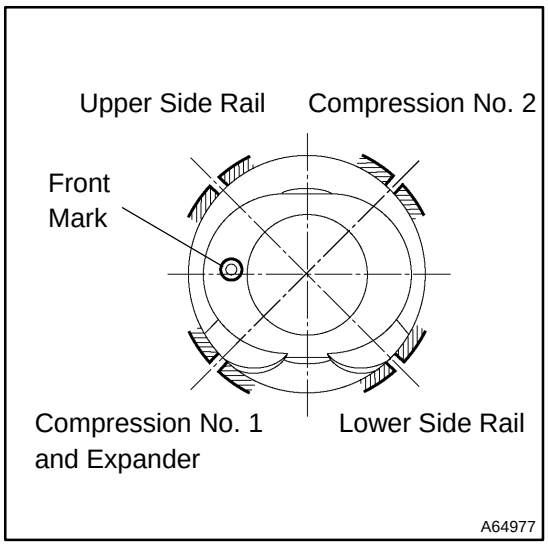

34. INSTALL CONNECTING ROD SUB–ASSY

(a) Position the piston rings so that the ring ends are as shown.

(b) Apply engine oil to the cylinder walls, pistons, and surfaces of the connecting rod bearings.

(c) Check the position of the piston ring ends.

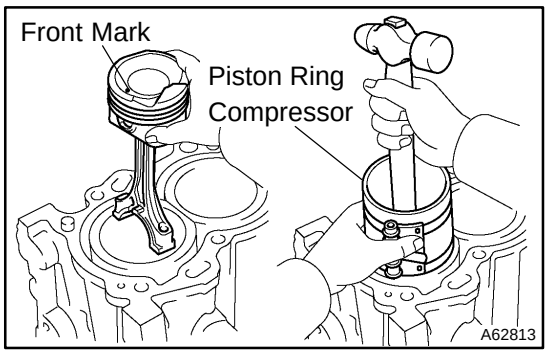

(d) Using a piston ring compressor, push the correctly numbered piston and connecting rod assemblies into each cylinder with the front mark of the piston facing forward.

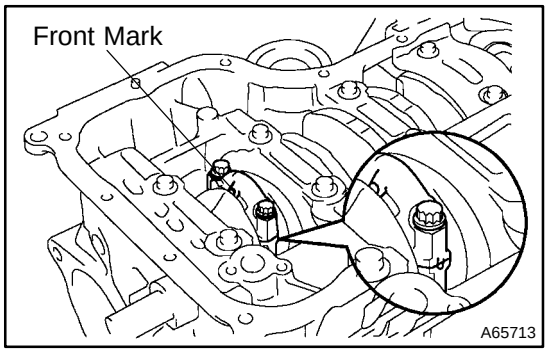

(e) Align the pin dowels of the connecting rod cap with the pins of the connecting rod, then install the connecting rod.

NOTICE:

- **Clean the backside and surface of the connecting rod cap bearing and let not stick the oils and fats.**
- **Match the numbered connecting rod cap with the same numbered connecting rod.**

(f) Check that the protrusion of the connecting rod cap is facing the correct direction.

(g) Apply a light coat of engine oil on the threads and under the heads of the connecting rod cap bolts.

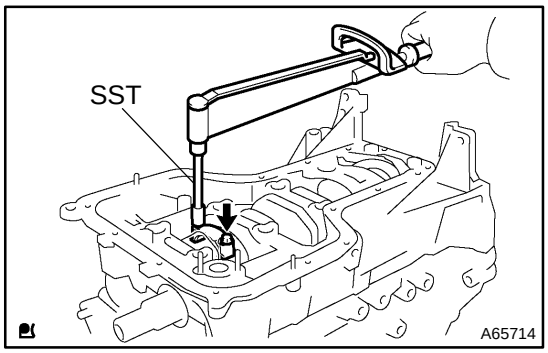

(h) Using SST, tighten the bolts in several passes by the specified torque.
SST 09205–16010
Torque: 20 N·m (204 kgf·cm, 15 ft·lbf)

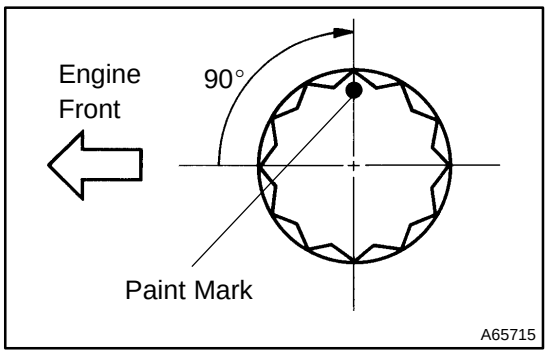

(i) Mark the front of the connecting cap bolts with paint.

(j) Retighten the cap bolts by 90° as shown in the illustration.

(k) Check that the crankshaft turns smoothly.

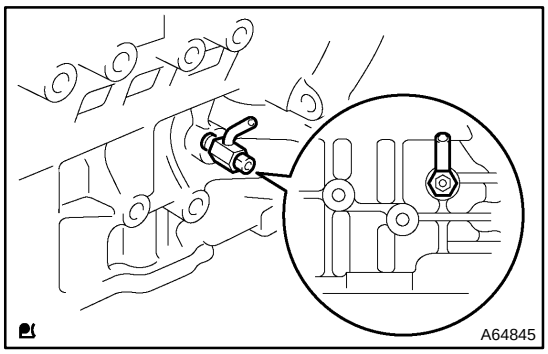

35. INSTALL CYLINDER BLOCK WATER DRAIN COCK SUB–ASSY

(a) Apply 2 or 3 threads of adhesive to the cylinder block water drain cock, then install it within 3 minutes.
Torque: 25 N·m (255 kgf·cm, 18 ft·lbf)
Adhesive:
Part No. 08833–00080, THREE BOND 1344, LOCTITE 242 or equivalent

(b) After applying the specified torque, rotate the cylinder block water drain cock clockwise until its drain port faces downward.

NOTICE:

- **Do not put into coolant in an hour of installation.**
- **Do not rotate the drain union more than 360° in (b), and never loosen it after setting the union correctly.**

CYLINDER HEAD ASSY

140Q6–02

COMPONENTS

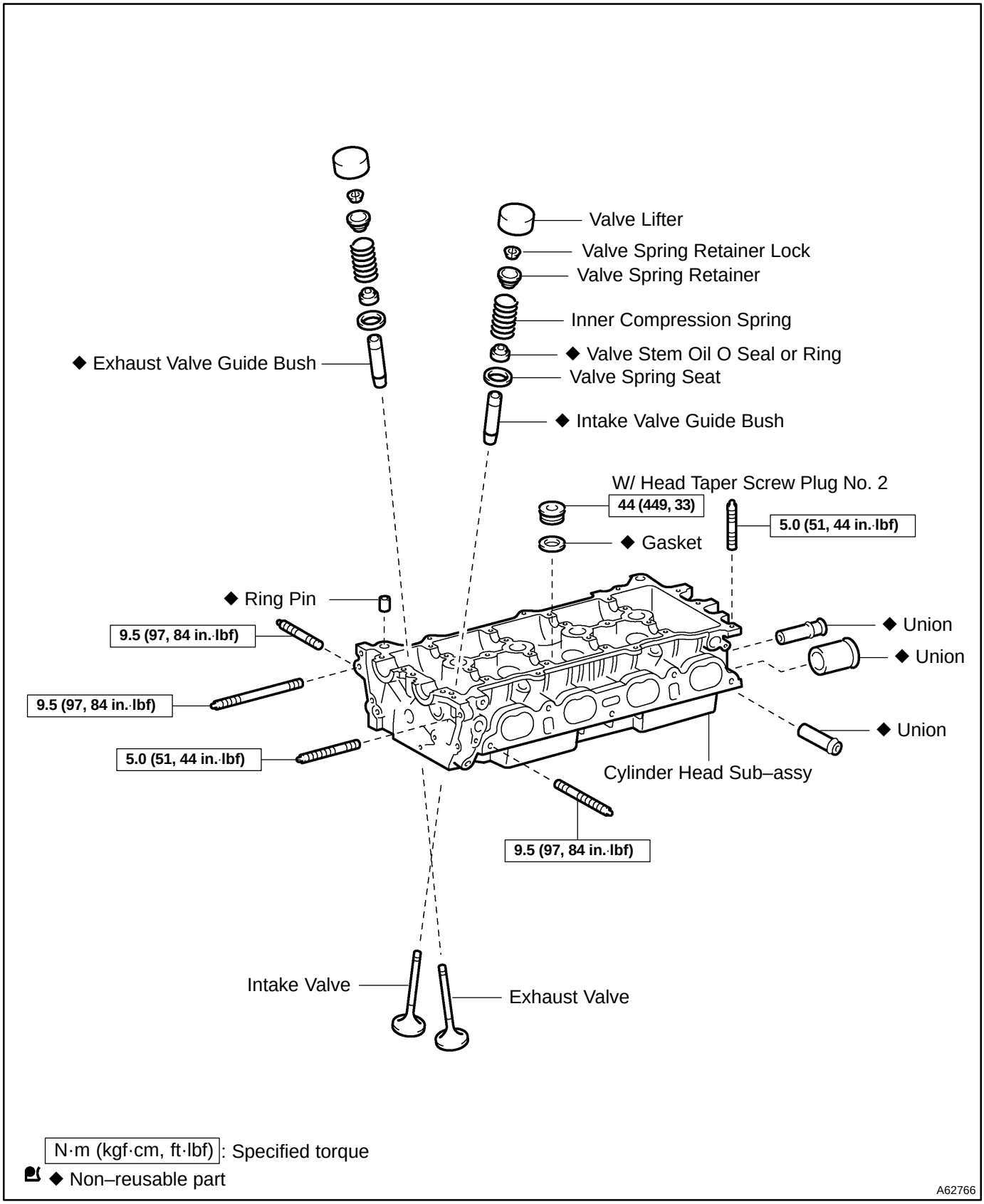

140Q7–04

OVERHAUL

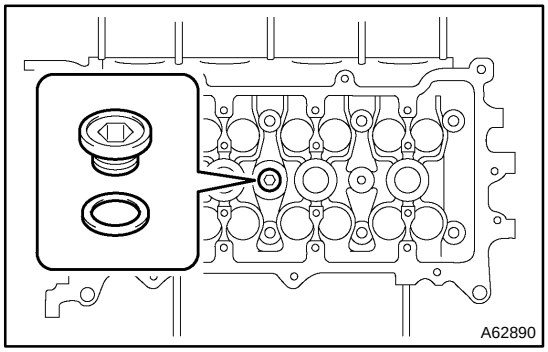

1. REMOVE W/HEAD TAPER SCREW PLUG NO.2

(a) Using a socket hexagon wench 10, remove the taper screw plug and gasket.

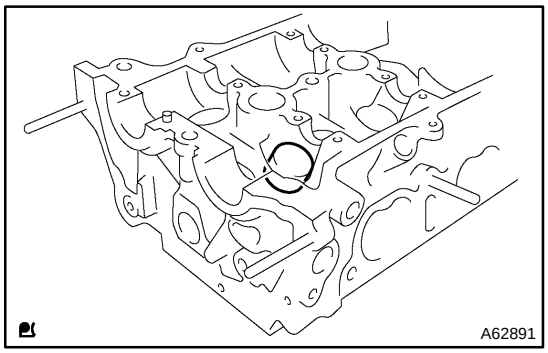

2. REMOVE VALVE LIFTER

(a) Remove the valve lifters from the cylinder head.

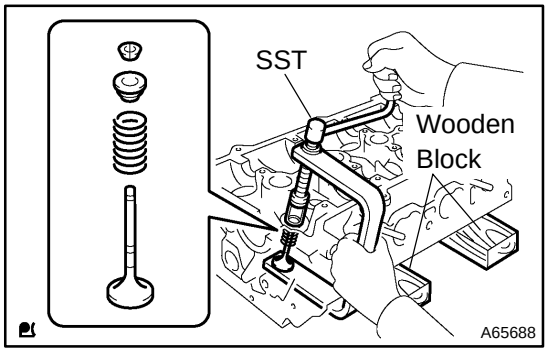

3. REMOVE VALVE

(a) Place the cylinder head on wooden blocks.

(b) Using SST, compress the inner compression spring and remove the 2 valve spring retainer locks.

SST 09202–70020 (09202–00010, 09202–01010, 09202–01020)

(c) Remove the valve spring retainers, inner compression springs and valves from the cylinder head.

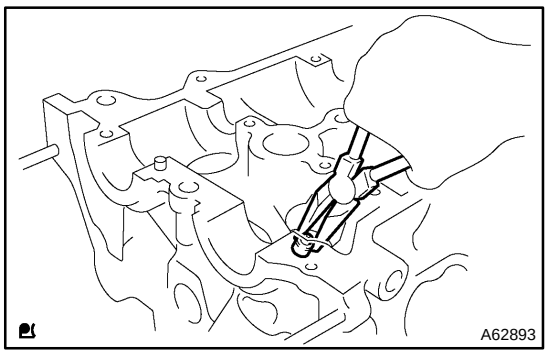

4. VALVE STEM OIL O SEAL OR RING

(a) Using a needle–nose pliers, remove the valve stem oil seals.

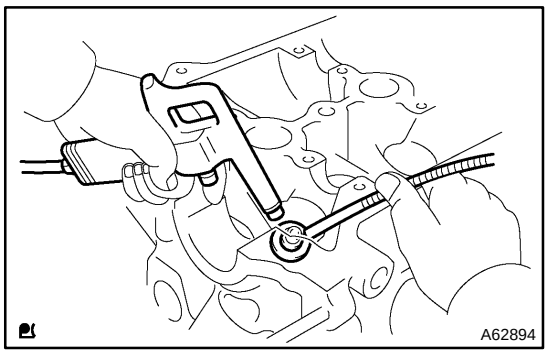

5. REMOVE VALVE SPRING SEAT

(a) Using a compressed air and a magnetic finger, remove the valve spring seats.

6. REMOVE STUD BOLT

(a) Using torx socket wrench E5 and E7, remove the 11 stud bolts.

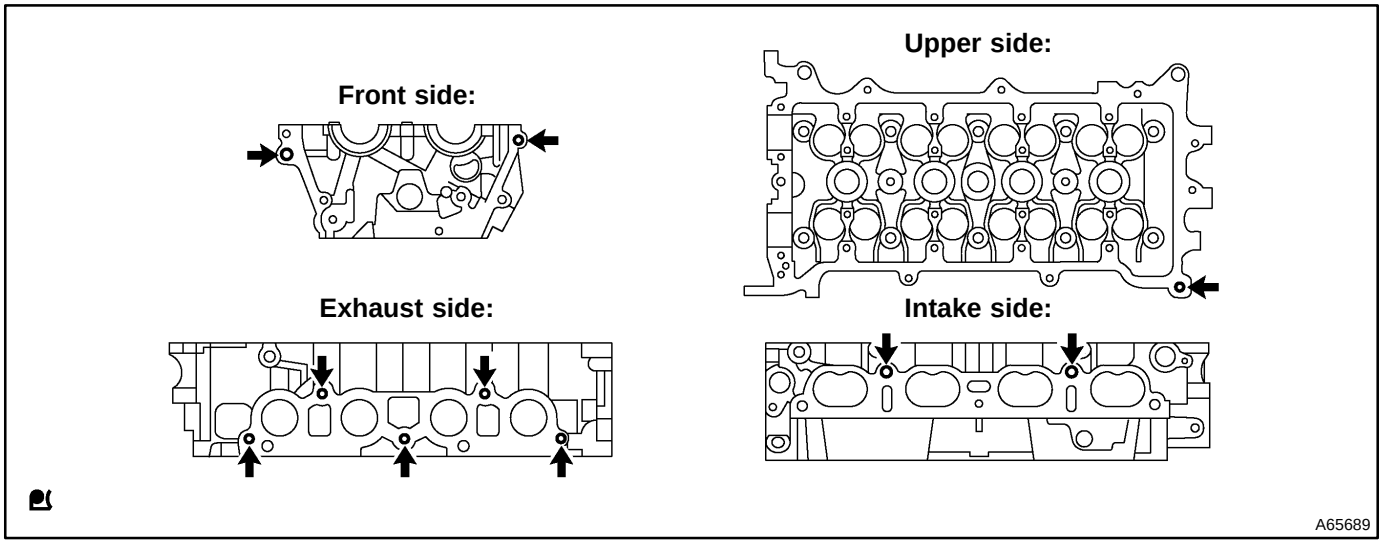

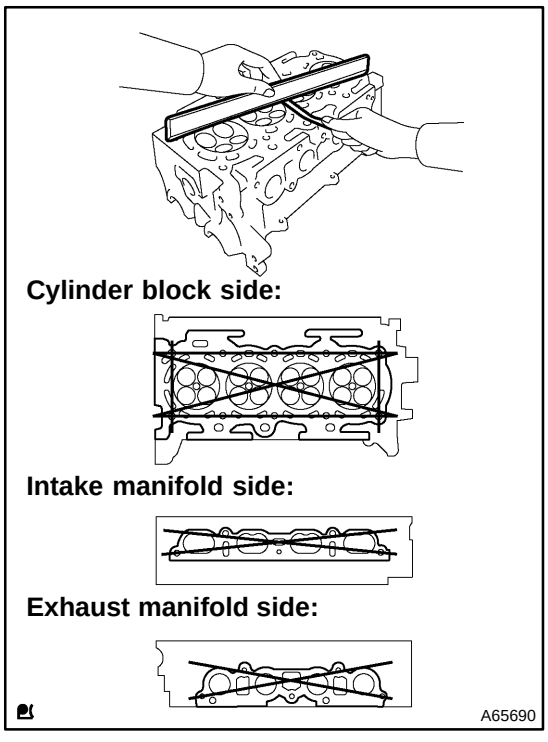

7. INSPECT CYLINDER HEAD FOR FLATNESS

(a) Using a precision straight edge and a feeler gauge, measure the surface contacting the cylinder block and the manifolds for warpage.

Maximum warpage:
Cylinder block side 0.05 mm (0.0020 in.)
Intake manifold side 0.10 mm (0.0039 in.)
Exhaust manifold side 0.10 mm (0.0039 in.)

If the warpage is greater than maximum, replace the cylinder head.

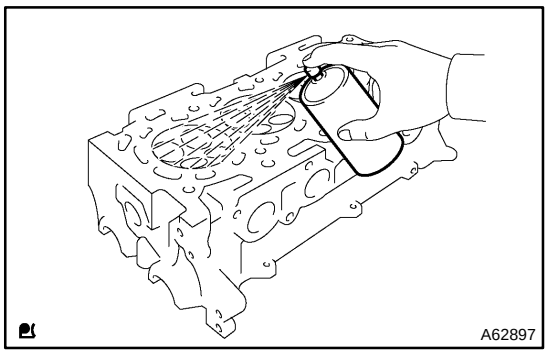

8. INSPECT CYLINDER HEAD FOR CRACKS

(a) Using a dye penetrate, check the combustion chamber, intake ports, exhaust ports and cylinder block surface for cracks.

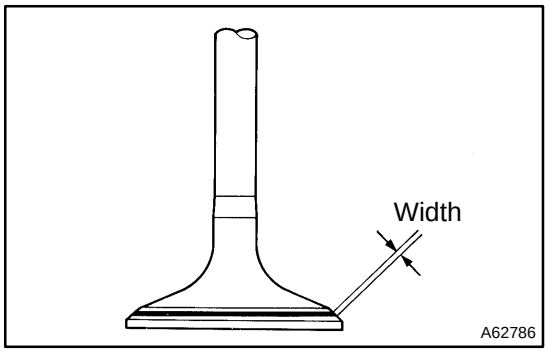

9. INSPECT VALVE SEATS

(a) Apply a light coat of prussian blue (or white lead) to the valve face.

(b) Lightly press the valve against the seat.

NOTICE:

Do not rotate valve.

(c) Check the valve face and seat according to the following procedure.

(1) If blue appears 360° around the face, the valve is concentric. If not, replace the valve.

(2) If blue appears 360° around the valve seat, the guide and face are concentric. If not, resurface the seat.

(3) Check that the seat contact is in the middle of the valve face with the width between 1.0 – 1.4 mm (0.039 – 0.055 in.).

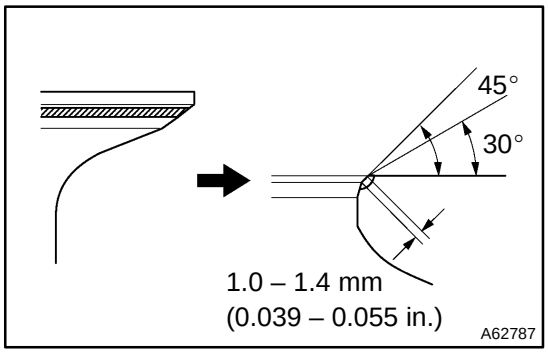

10. REPAIR VALVE SEATS

NOTICE:

Take off a cutter gradually to make smooth valve seats.

(a) If the seating is too high on the valve face, use 30° and 45° cutters to correct the seat.

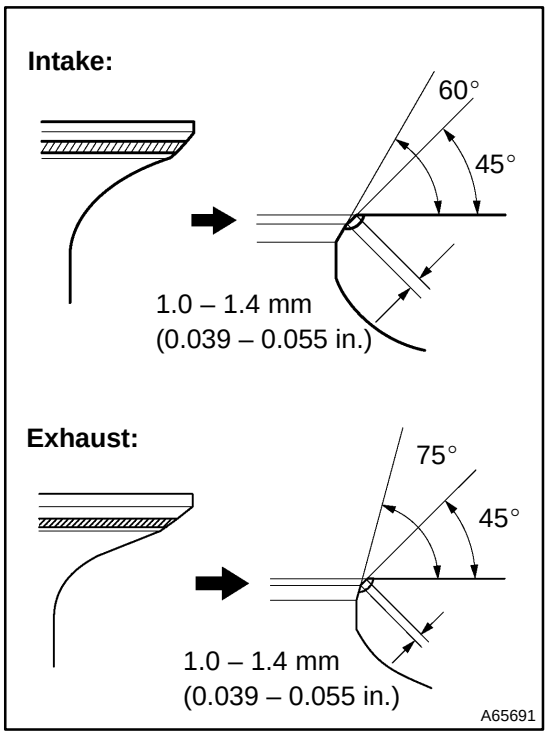

(b) Intake:
  (1) If the seating is too low on the valve face, use 60° and 45° cutters to correct the seat.

(c) Exhaust:
  (1) If the seating is too low on the valve face, use 75° and 45° cutters to correct the seat.

(d) Hand–lap the valve and valve seat with an abrasive compound.

(e) Check the valve seating position.

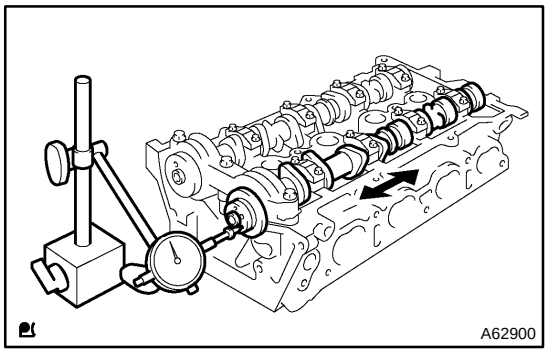

11. INSPECT CAMSHAFT THRUST CLEARANCE

(a) Install the 2 camshafts.

(b) Using a dial indicator, measure the thrust clearance while moving the camshaft back and forth.

Standard thrust clearance:
0.040 – 0.095 mm (0.0016 – 0.0037 in.)
Maximum thrust clearance: 0.110 mm (0.0043 in.)

If the thrust clearance is greater than maximum, replace the cylinder head. If damages are found on the camshaft thrust surfaces, the camshaft also has to be replaced.

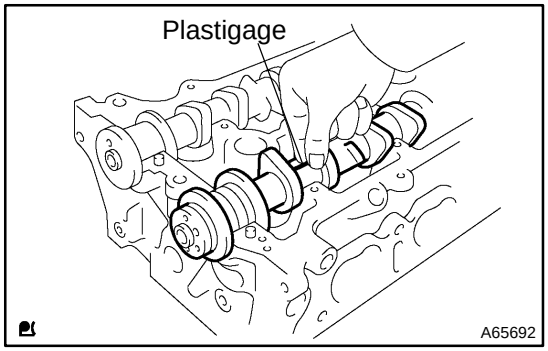

12. INSPECT CAMSHAFT OIL CLEARANCE

(a) Clean the bearing caps and camshaft journals.

(b) Place the camshafts on the cylinder head.

(c) Lay a strip of plastigage across each of the camshaft journal.

(d) Install the bearing caps. (See page 14–45)

NOTICE:
Do not turn the camshaft.

(e) Remove the bearing caps. (See page 14–45)

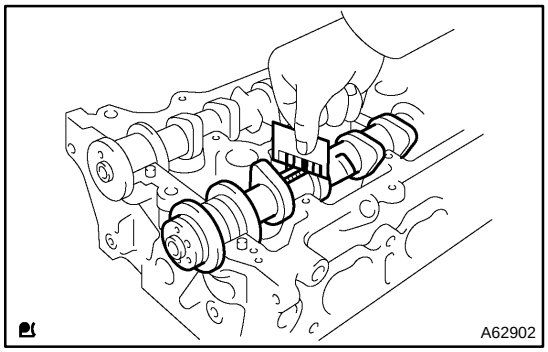

(f) Measure the plastigage at its widest point.

Standard oil clearance:
0.035 – 0.072 mm (0.0014 – 0.0028 in.)
Maximum oil clearance: 0.10 mm (0.0039 in.)

NOTICE:
Completely remove the plastigage after the measuring.

If the oil clearance is greater than maximum, replace the cylinder head.

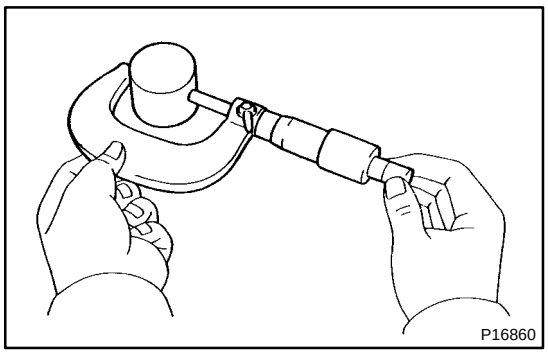

13. INSPECT VALVE LIFTER

(a) Using a micrometer, measure the valve lifter diameter.
Lifter diameter:
30.966 – 30.976 mm (1.2191 – 1.2195 in.)

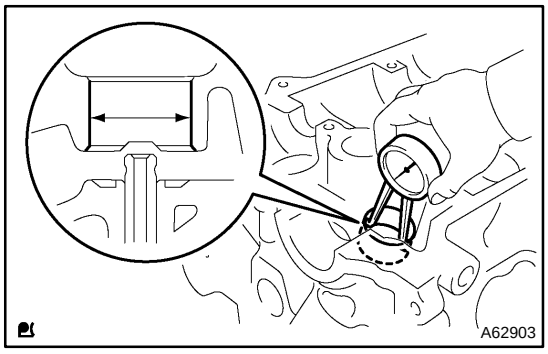

14. INSPECT VALVE LIFTER OIL CLEARANCE

(a) Using a caliper gauge, measure the valve lifter bore diameter of the cylinder head.
Lifter bore diameter:
31.000 – 31.025 mm (1.2205 – 1.2215 in.)

(b) Subtract the valve lifter diameter measurement from the valve lifter bore diameter measurement.
Standard oil clearance:
0.024 – 0.059 mm (0.0009 – 0.0023 in.)
Maximum oil clearance: 0.079 mm (0.0031 in.)

If the oil clearance is greater than maximum, replace the valve lifter.

If necessary, replace the cylinder head.

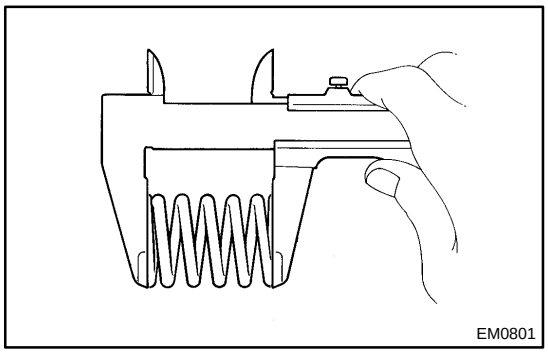

15. INSPECT INNER COMPRESSION SPRING

(a) Using a vernier caliper, measure the free length of the inner compression spring.
Free length: 43.40 mm (1.7087 in.)

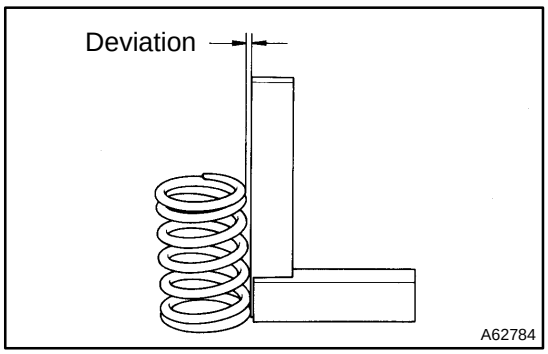

(b) Using a steel square, measure the deviation of the inner compression spring.
Maximum deviation: 1.6 mm (0.063 in.)
Maximum angle (reference): 2°

If the deviation is greater than maximum, replace the inner compression spring.

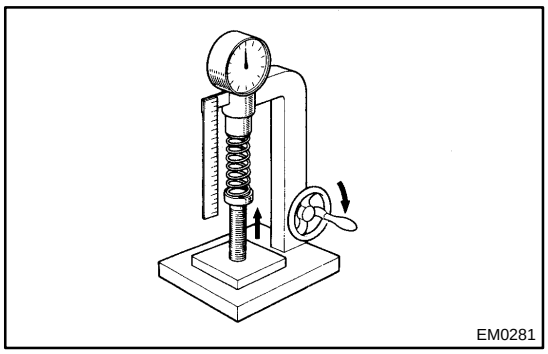
EM0281

(c) Using a spring tester, measure the tension of the inner compression spring at the specified installed length.
Installed tension:
158.6 – 175.4 N (16.2 – 17.9 kgf, 35.7 – 39.5 lbf)
at 33.6 mm (1.323 in.)
Maximum working tension:
335.3 – 370.7 N (34.2 – 37.8 kgf, 75.4 – 83.3 lbf)
at 24.1 mm (0.949 in.)

If the installed tension is not as specified, replace the inner compression spring.

16. INSPECT VALVE

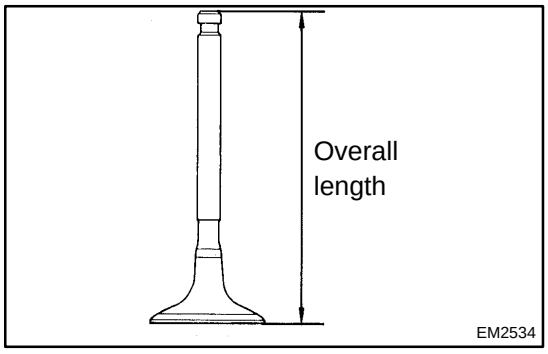

EM2534

(a) Using a vernier calipers, check the valve overall length.
Standard overall length:
Intake 88.65 mm (3.4902 in.)
Exhaust 88.69 mm (3.4917 in.)
Minimum overall length:
Intake 88.35 mm (3.4784 in.)
Exhaust 88.39 mm (3.4799 in.)

If the overall length is less than minimum, replace the valve.

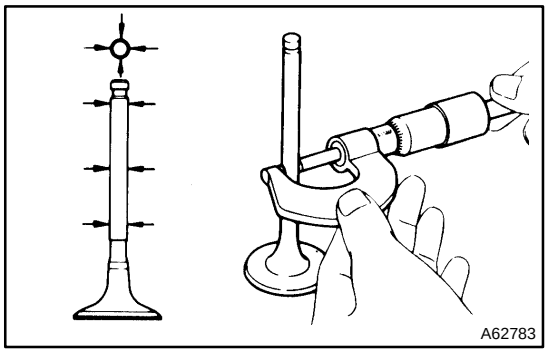
A62783

(b) Using a micrometer, measure the diameter of the valve stem.
Valve stem diameter:
Intake 5.470 – 5.485 mm (0.2154 – 0.2159 in.)
Exhaust 5.465 – 5.480 mm (0.2152 – 0.2158 in.)

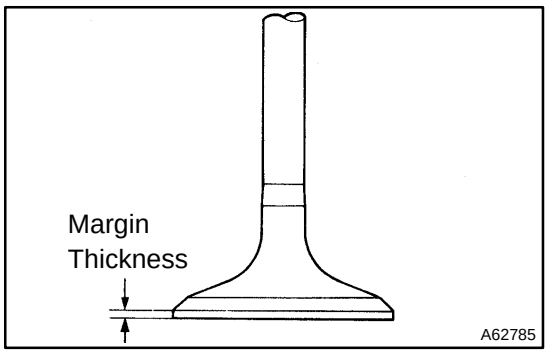

A62785

(c) Using a vernier calipers, check the valve head margin thickness.
Standard margin thickness: 1.0 mm (0.039 in.)
Minimum margin thickness: 0.7 mm (0.028 in.)

If the overall length is less than minimum, replace the valve.

17. INSPECT VALVE GUIDE BUSHING OIL CLEARANCE

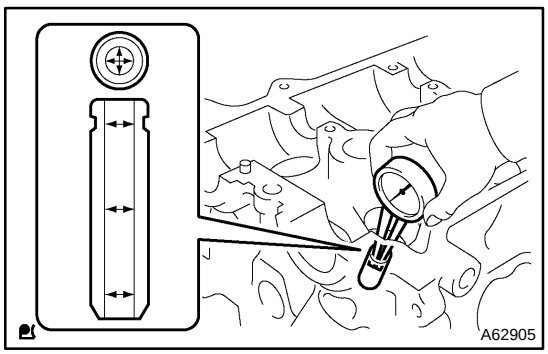
A62905

(a) Using a caliper gauge, measure the inside diameter of the valve guide bush.
Busing inside diameter:
5.510 – 5.530 mm (0.2169 – 0.2177 in.)

(b) Subtract the valve stem diameter measurement from the guide bushing inside diameter measurement.
Standard oil clearance:
Intake 0.025 – 0.060 mm (0.0010 – 0.0024 in.)
Exhaust 0.030 – 0.065 mm (0.0012 – 0.0026 in.)
Maximum oil clearance:
Intake 0.08 mm (0.0032 in.)
Exhaust 0.10 mm (0.0039 in.)

If the oil clearance is greater than maximum, replace the valve and valve guide bushing.

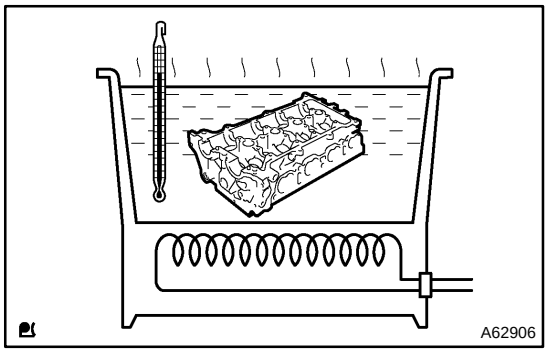

18. REPLACE VALVE GUIDE BUSHING

(a) Heat the cylinder head to 80 – 100°C (176 – 212°F).

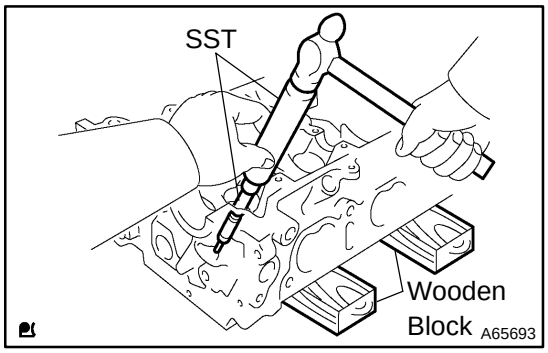

(b) Place the cylinder head on the wooden blocks.

(c) Using SST, tap out the valve guide bushing.
SST 09201–10000, 09201–01055, 09950–70010 (09951–07100)

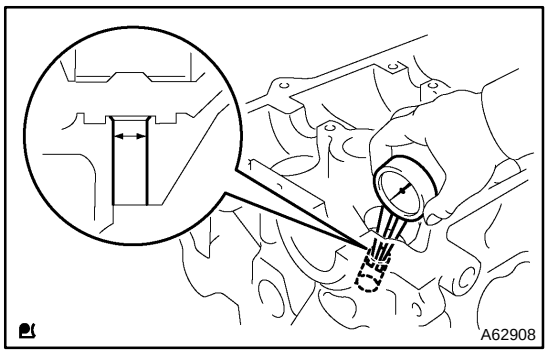

(d) Using a caliper gauge, measure the bushing bore diameter of the cylinder head.
Diameter: 10.285 – 10.306 mm (0.4049 – 0.4058 in.)

If the bushing bore diameter of the cylinder head is greater than 10.306 mm (0.4058 in.), machine the bushing bore to the dimension of 10.335 – 10.356 mm (0.4069 – 0.4077 in.) to install a over size valve guide bushing.

HINT:

Valve guide bushing size	Bushing bore diameter mm (in.)
STD	10.285 – 10.306 (0.4049 – 0.4058)
O/S 0.05	10.335 – 10.356 (0.4069 – 0.4077)

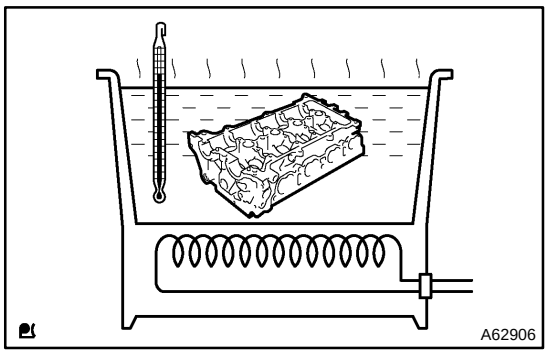

(e) Heat the cylinder head to 80 – 100°C (176 – 212°F).

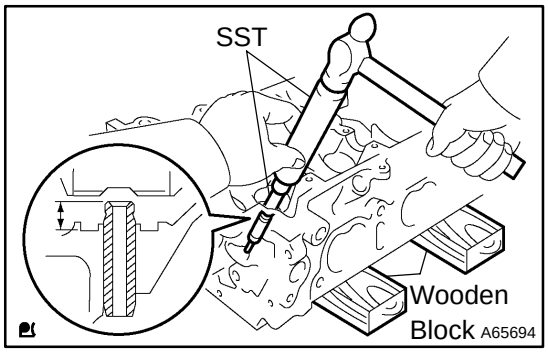

(f) Place the cylinder head on wooden blocks.

(g) Using SST, tap in a new valve guide bushing to the specified protrusion height.

SST 09201–10000, 09201–01055, 09950–70010 (09951–07100)

Protrusion height: 8.7 – 9.1 mm (0.343 – 0.358 in.)

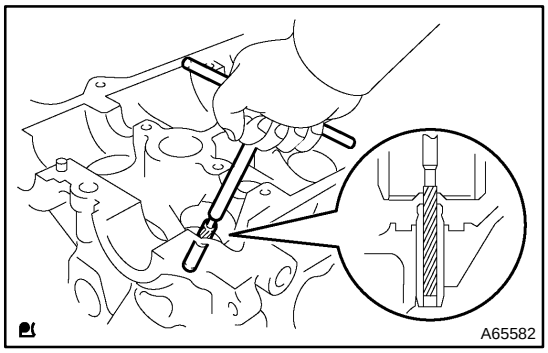

(h) Using a sharp 5.5 mm reamer, ream the valve guide bushing to obtain the standard specified clearance.

Standard oil clearance:
Intake 0.025 – 0.060 mm (0.0010 – 0.0024 in.)
Exhaust 0.030 – 0.065 mm (0.0012 – 0.0026 in.)

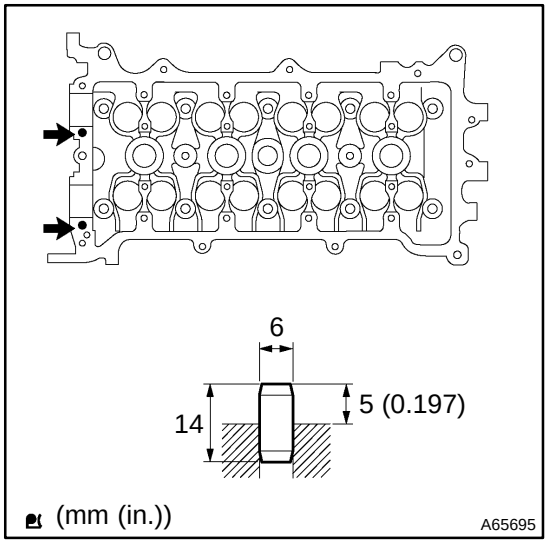

19. INSTALL STRAIGHT PIN

(a) Using a plastic hammer, install the new 2 straight pins.

Standard protrusion: 5 mm (0.197 in.)

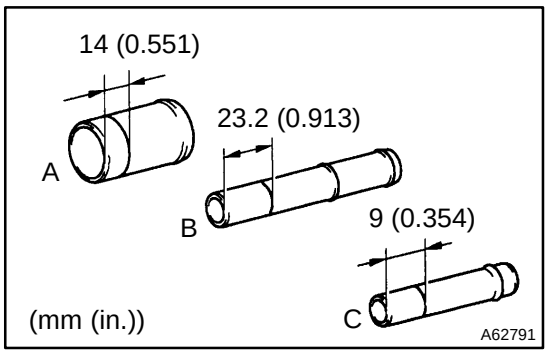

20. INSTALL UNION

(a) Mark the standard position away from the edge, onto the water hose union as shown in the illustration.

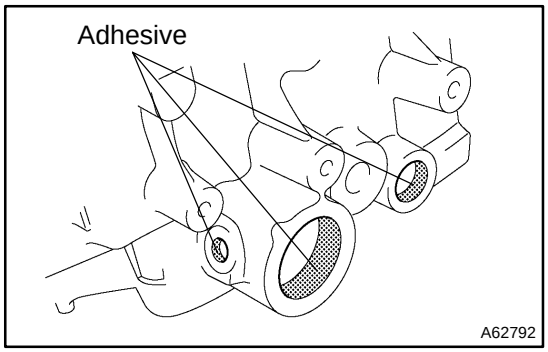

(b) Apply adhesive to the water hose union hole of the cylinder head.

Adhesive:
Part No. 08833–00070, THREE BOND 1324 or equivalent.

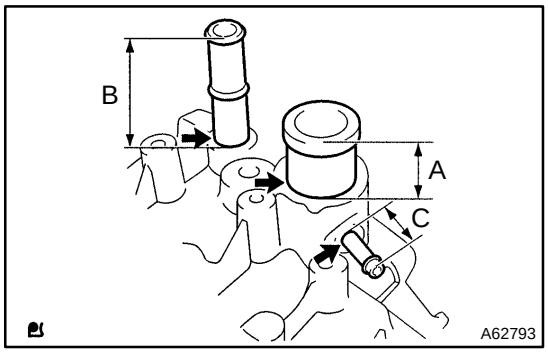

(c) Using a press, press in a new water hose union until the standard marks come to the level of the cylinder head surface.

Standard protrusion:
A 29 mm (1.142 in.)
B 66.5 mm (2.618 in.)
C 24 mm (0.945 in.)

NOTICE:

- **Install the water hose union within 3 minutes after applying adhesive.**
- **Do not put into coolant within an hour after installing.**

21. INSTALL STUD BOLT

(a) Using torx socket wrench E5 and E7, install the 11 stud bolts,
Torque:
Stud bolt A, D and E 9.5 N·m (97 kgf·cm, 84 in.·lbf)
Stud bolt B and C 5.0 N·m (51 kgf·cm, 44 in.·lbf)

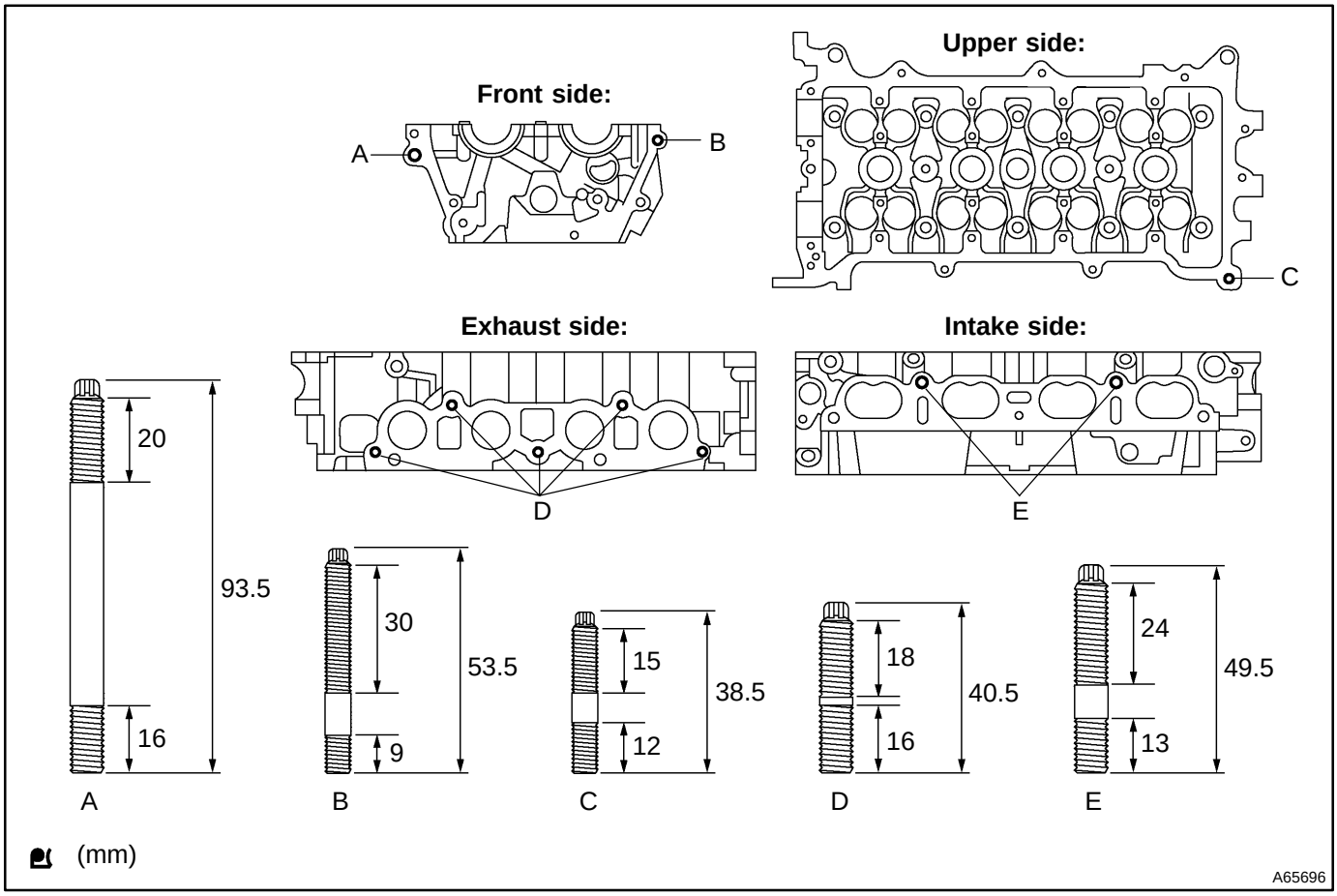

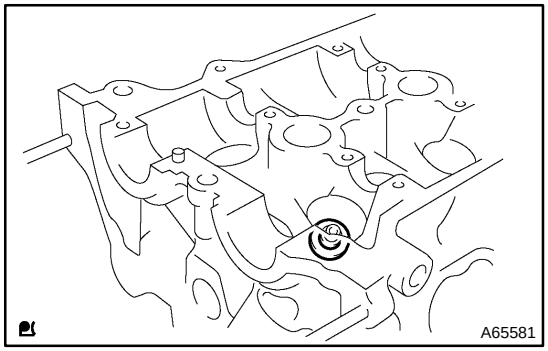

22. INSTALL VALVE SPRING SEAT

(a) Install the valve spring seats to the cylinder head.

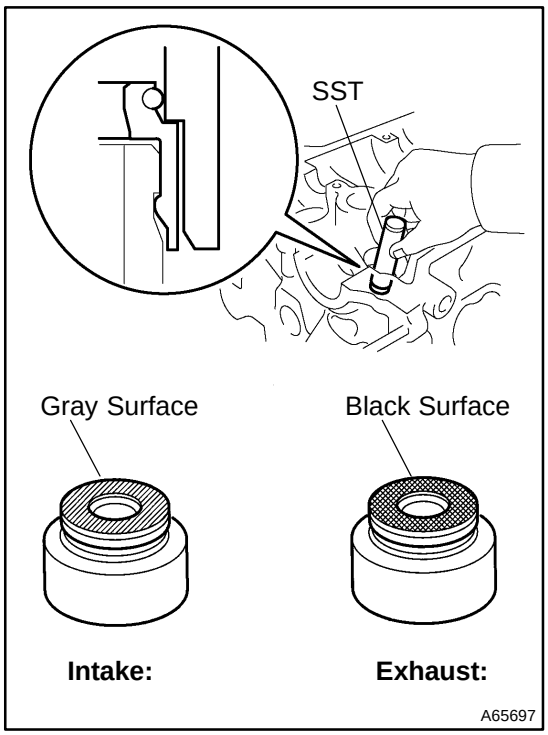

23. INSTALL VALVE STEM OIL O SEAL OR RING

(a) Apply a light coat of engine oil to a new valve stem oil seals.

NOTICE:

Be very careful to assemble the oil seal for intake and exhaust. Assembling the wrong one may cause a failure.

HINT:

The intake valve stem oil seal is gray and exhaust valve stem oil seal is black.

(b) Using SST, push in the valve stem oil seals.

SST 09201–41020

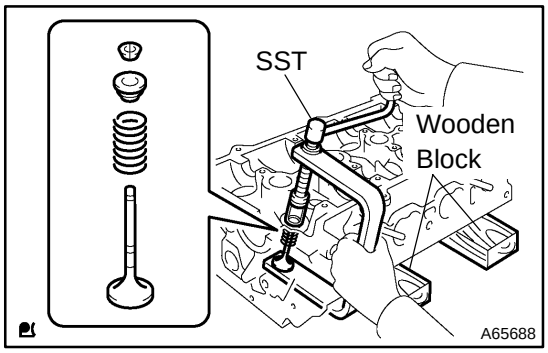

24. INSTALL VALVE

(a) Place the cylinder head on wooden blocks.

(b) Install the valves, inner compression springs and valve spring retainers to the cylinder head.

(c) Using SST, compress the inner compression spring, and place the 2 valve spring retainer locks around the valve stem.

SST 09202–70020 (09202–00010, 09202–01010, 09202–01020)

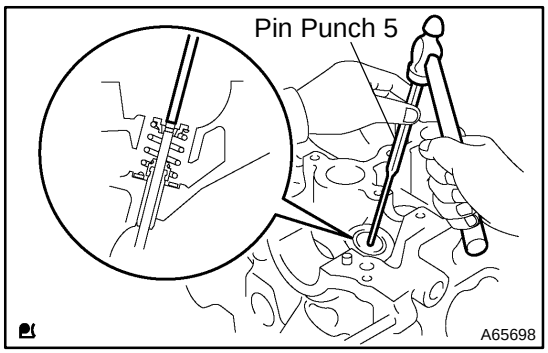

(d) Using a pin punch 5, lightly tap the valve stem tip to ensure a proper fit.

NOTICE:

Be careful not to damage the valve stem tip.

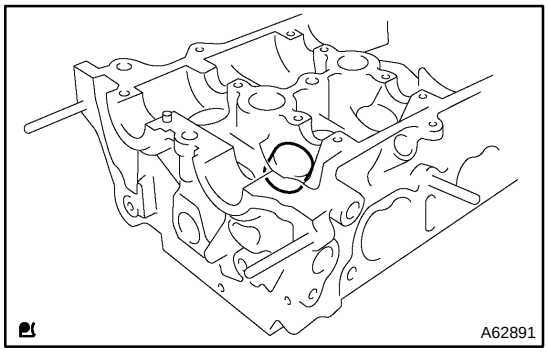

25. INSTALL VALVE LIFTER

(a) Apply a light coat of engine oil to the valve lifters.

(b) Install the valve lifters to the cylinder head.

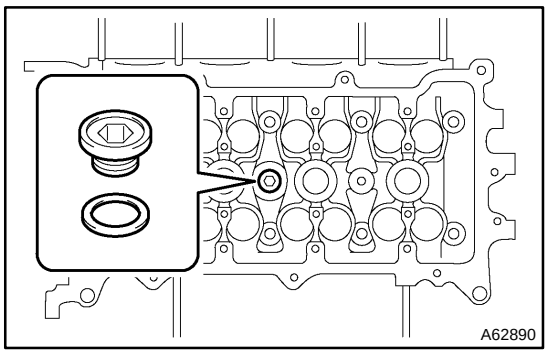

26. INSTALL W/HEAD TAPER SCREW PLUG NO.2

(a) Using a socket hexagon wrench 10, install the taper screw plug with a new gasket.
Torque: 44 N·m (449 kgf·cm, 33 ft·lbf)

CYLINDER HEAD GASKET

COMPONENTS

140OK–05

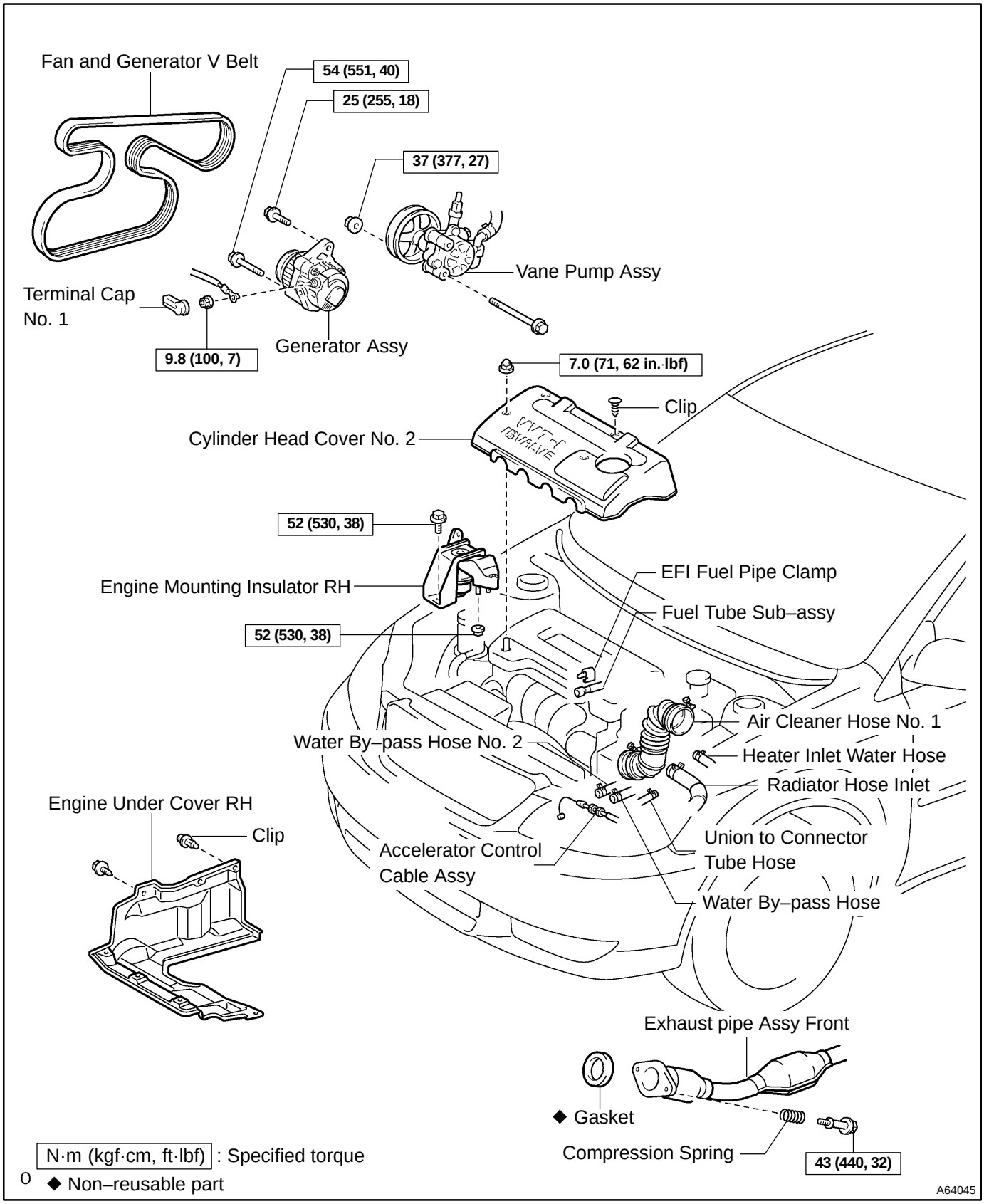

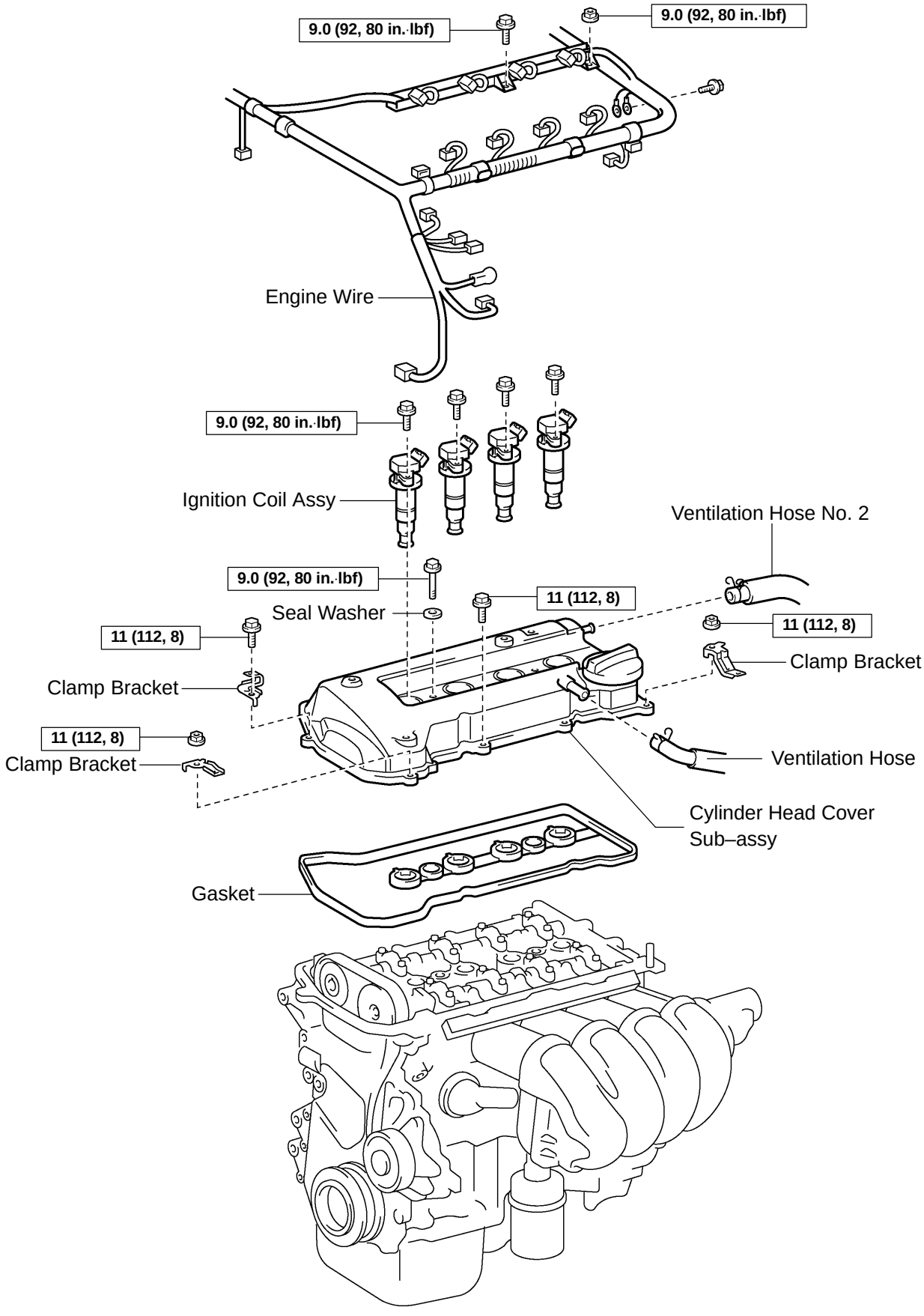
9.0 (92, 80 in.·lbf)
9.0 (92, 80 in.·lbf)
Engine Wire
9.0 (92, 80 in.·lbf)
Ignition Coil Assy
Ventilation Hose No. 2
9.0 (92, 80 in.·lbf)
11 (112, 8)
Seal Washer
11 (112, 8)
11 (112, 8)
Clamp Bracket
Clamp Bracket
11 (112, 8)
Clamp Bracket
Ventilation Hose
Cylinder Head Cover Sub–assy
Gasket
N·m (kgf·cm, ft·lbf) : Specified torque
A64043

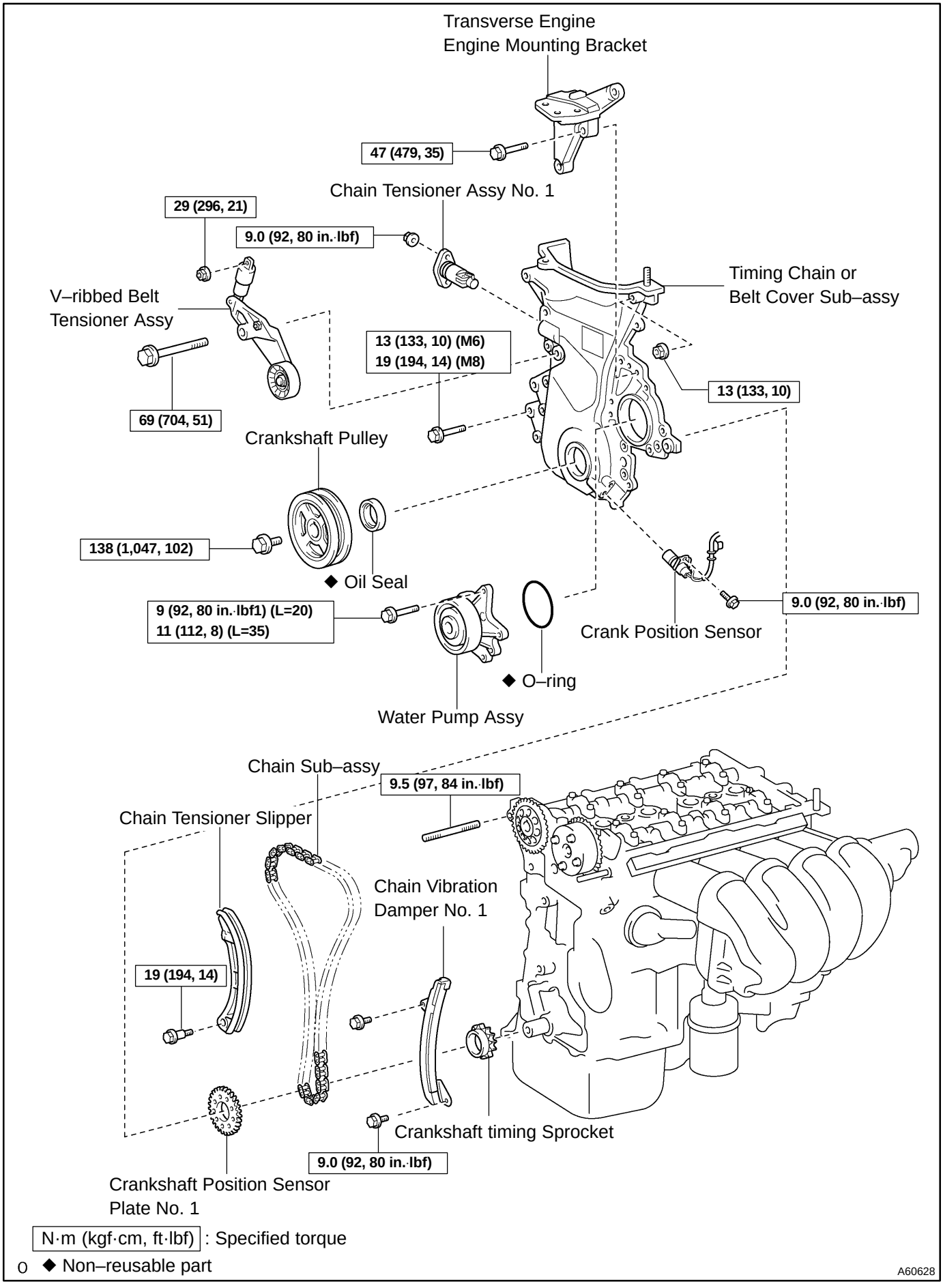
Transverse Engine
Engine Mounting Bracket
47 (479, 35)
Chain Tensioner Assy No. 1
29 (296, 21)
9.0 (92, 80 in.·lbf)
V–ribbed Belt
Tensioner Assy
Timing Chain or
Belt Cover Sub–assy
13 (133, 10) (M6)
19 (194, 14) (M8)
13 (133, 10)
69 (704, 51)
Crankshaft Pulley
138 (1,047, 102)
◆ Oil Seal
9 (92, 80 in.·lbf1) (L=20)
11 (112, 8) (L=35)
9.0 (92, 80 in.·lbf)
Crank Position Sensor
◆ O–ring
Water Pump Assy
Chain Sub–assy
9.5 (97, 84 in.·lbf)
Chain Tensioner Slipper
Chain Vibration
Damper No. 1
19 (194, 14)
Crankshaft timing Sprocket
9.0 (92, 80 in.·lbf)
Crankshaft Position Sensor
Plate No. 1
N·m (kgf·cm, ft·lbf) : Specified torque
◆ Non–reusable part
A60628

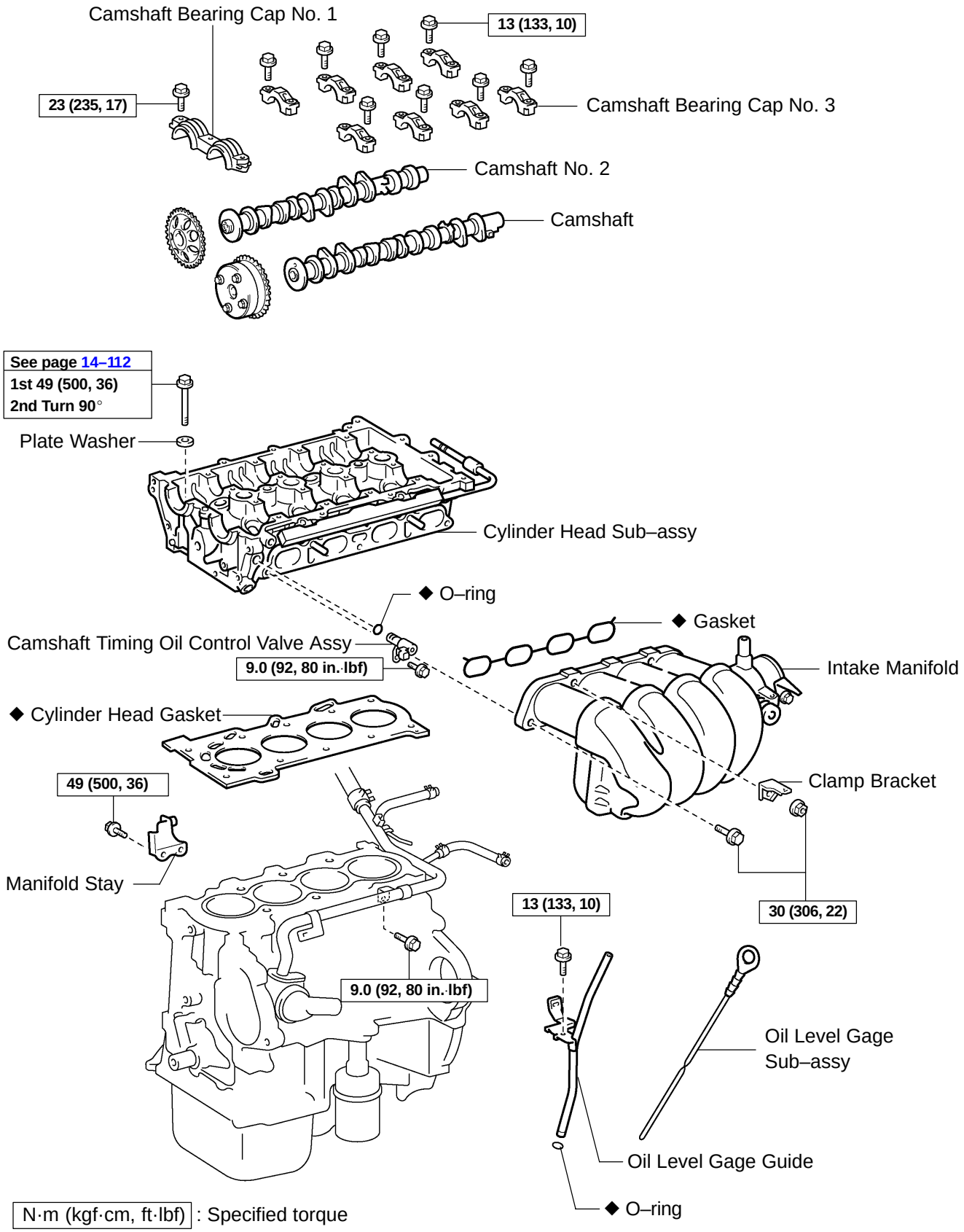
Camshaft Bearing Cap No. 1
13 (133, 10)
23 (235, 17)
Camshaft Bearing Cap No. 3
Camshaft No. 2
Camshaft
See page 14–112
1st 49 (500, 36)
2nd Turn 90°
Plate Washer
Cylinder Head Sub–assy
◆ O–ring
◆ Gasket
Camshaft Timing Oil Control Valve Assy
9.0 (92, 80 in.·lbf)
Intake Manifold
◆ Cylinder Head Gasket
Clamp Bracket
49 (500, 36)
Manifold Stay
30 (306, 22)
13 (133, 10)
9.0 (92, 80 in.·lbf)
Oil Level Gage Sub–assy
Oil Level Gage Guide
◆ O–ring
N·m (kgf·cm, ft·lbf) : Specified torque
◆ Non–reusable part
A64046

140OL–01

REPLACEMENT

1. **WORK FOR PREVENTING GASOLINE FROM SPILLING OUT (See page 11–1)**
2. **REMOVE ENGINE UNDER COVER RH**
3. **DRAIN COOLANT (See page 16–7)**
4. **REMOVE FRONT WHEEL RH**

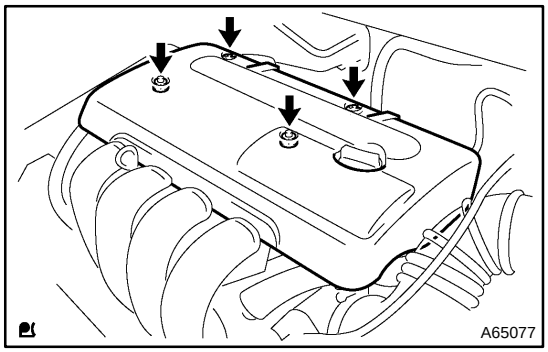

5. **REMOVE CYLINDER HEAD COVER NO.2**

(a) Remove the 2 nuts, 2 clips and cylinder head cover.

6. **REMOVE AIR CLEANER HOSE NO.1**

(a) Loosen the 2 air cleaner hose clamp bolts, and remove the air cleaner hose.

7. **SEPARATE ACCELERATOR CONTROL CABLE ASSY**

(a) Loosen the nut, and remove the accelerator control cable from the accelerator control cable bracket.

8. **DISCONNECT WATER BY–PASS HOSE**

(a) Disconnect the water by–pass hose from the throttle body.

9. **DISCONNECT WATER BY–PASS HOSE NO.2**

(a) Disconnect the water by–pass hose from the throttle body.

10. **REMOVE EFI FUEL PIPE CLAMP (See page 11–10)**
11. **DISCONNECT FUEL TUBE SUB–ASSY (See page 11–10)**

SST 09268–21010

12. **DISCONNECT UNION TO CONNECTOR TUBE HOSE**

(a) Disconnect the union to connector tube hose from the hose to hose tube.

13. **DISCONNECT RADIATOR HOSE INLET**

(a) Disconnect radiator hose inlet from the cylinder head.

14. **DISCONNECT HEATER INLET WATER HOSE**

(a) Disconnect the heater inlet water hose from the cylinder head.

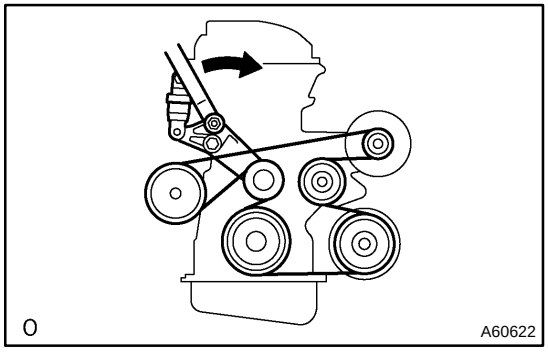

15. **REMOVE FAN AND GENERATOR V BELT**

(a) Turn the V–ribbed belt tensioner slowly clockwise and loosen it. Then, remove the fan and generator V belt and put back the V–ribbed belt tensioner little by little and fix it quietly.

16. SEPARATE VANE PUMP ASSY (See page 51–8)

NOTICE:

Do not disconnect the hose.

17. REMOVE GENERATOR ASSY (See page 19–16)

18. SEPARATE EXHAUST PIPE ASSY FRONT

(a) Remove the 2 bolts, 2 compression spring installing the front side of exhaust pipe.

(b) Remove the gasket.

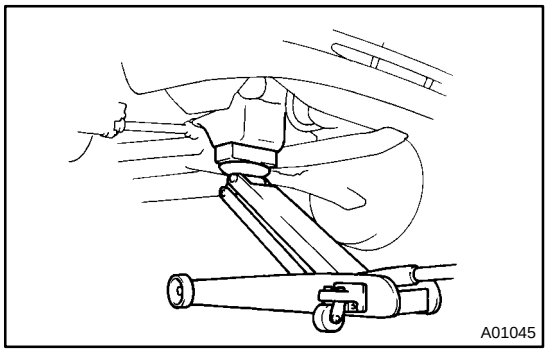

19. REMOVE ENGINE MOUNTING INSULATOR SUB–ASSY RH

(a) Remove the PS oil pump reservoir and put it aside.

(b) Place a wooden block between the jack and engine, and set the jack, then remove the 4 bolts, the 2 nuts and engine mounting insulator RH.

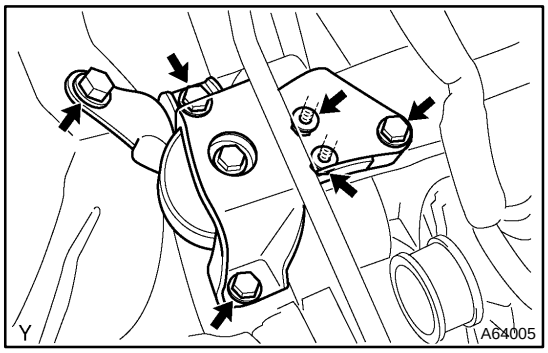

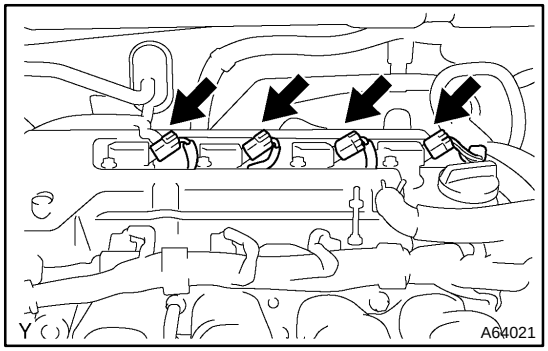

20. DISCONNECT ENGINE WIRE

(a) Remove the 5 clamps from the 5 clamp brackets.

(b) Disconnect the 4 ignition coil connectors.

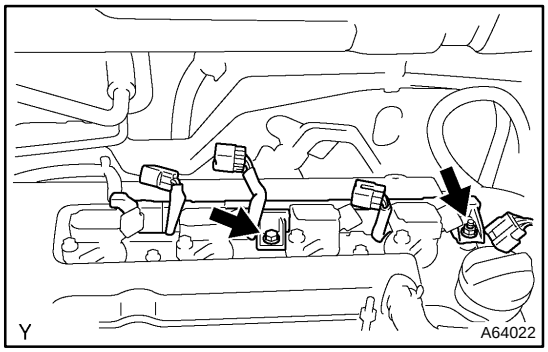

(c) Remove the bolt and nut installing the engine wire.

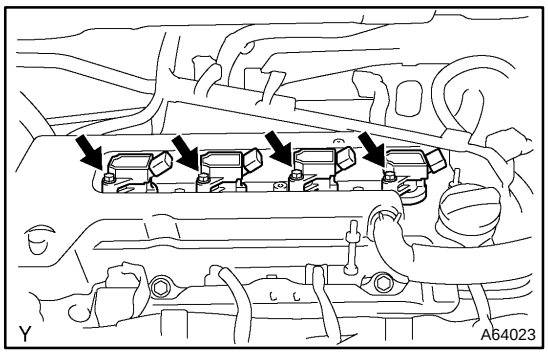

21. REMOVE IGNITION COIL ASSY

(a) Remove the 4 bolts and 4 ignition coils.

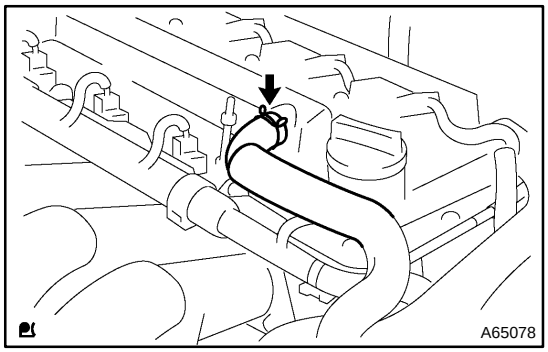

22. DISCONNECT VENTILATION HOSE

(a) Disconnect the ventilation hose from the cylinder head cover.

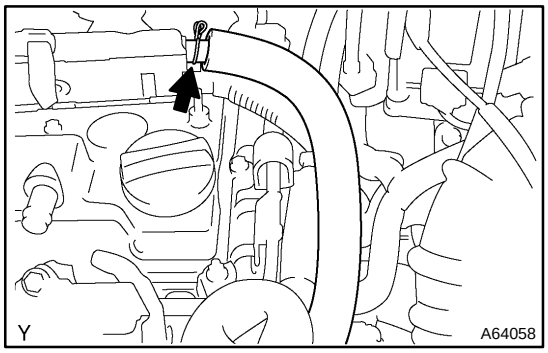

23. DISCONNECT VENTILATION HOSE NO.2

(a) Disconnect the ventilation hose from the cylinder head cover.

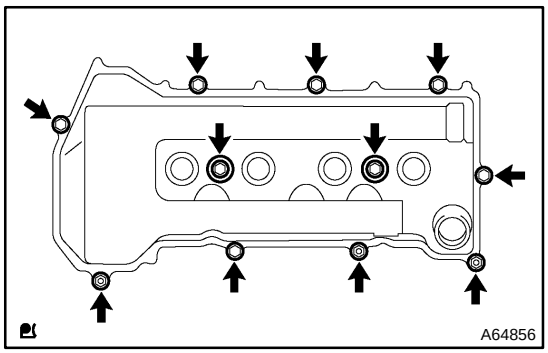

24. REMOVE CYLINDER HEAD COVER SUB–ASSY

(a) Remove the 9 bolts, 2 seal washers, 2 nuts, 3 clamp brackets and cylinder head cover.

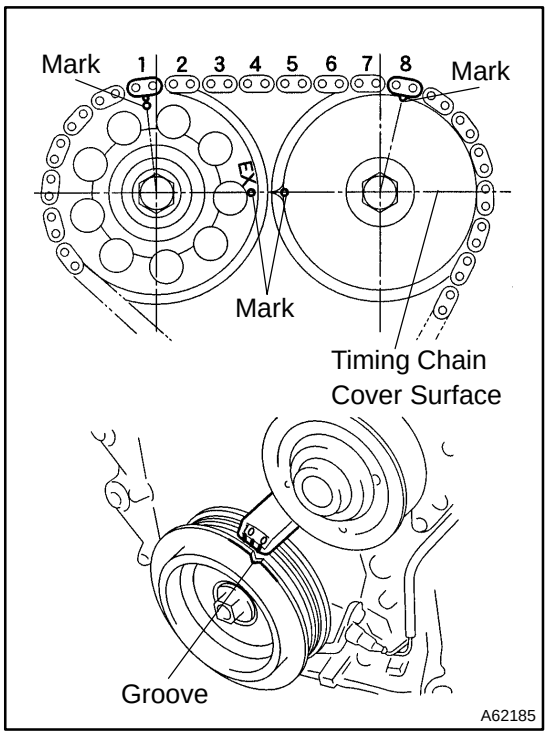

25. SET NO. 1 CYLINDER TO TDC/COMPRESSION

(a) Turn the crankshaft pulley, and align its groove with timing mark ”0” of the timing chain cover.

(b) Check that the point marks of the camshaft timing sprocket and VVT timing sprocket are in straight line on the timing chain cover surface as shown in the illustration.

HINT:

If not, turn the crankshaft 1 revolution (360°) and align the marks as above.

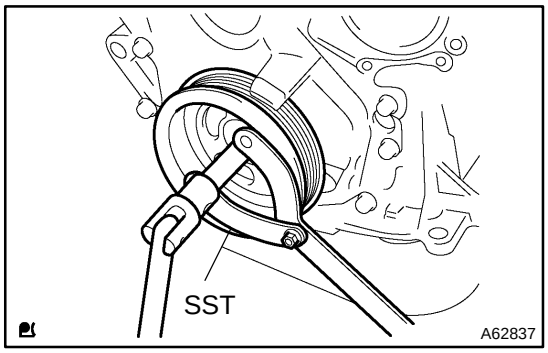

26. REMOVE CRANKSHAFT PULLEY

(a) Using SST, remove the pulley bolt.

SST 09960–10010 (09962–01000, 09963–01000)

(b) Remove the crankshaft pulley from the crankshaft.

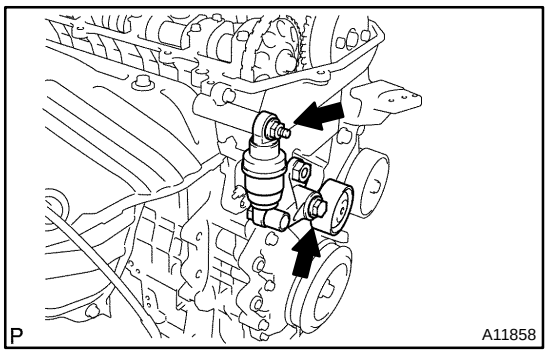

27. REMOVE V–RIBBED BELT TENSIONER ASSY

(a) Remove the bolt, nut and V–ribbed belt tensioner.

HINT:

Handle a jack up and down to remove the bolt.

28. REMOVE WATER PUMP ASSY (See page 16–8)

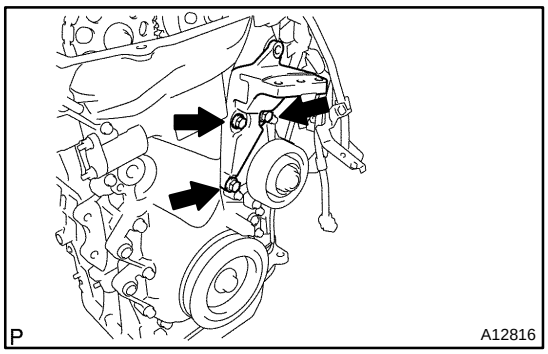

29. REMOVE TRANSVERSE ENGINE ENGINE MOUNTING BRACKET

(a) Remove the 3 bolts and transverse engine engine mounting bracket.

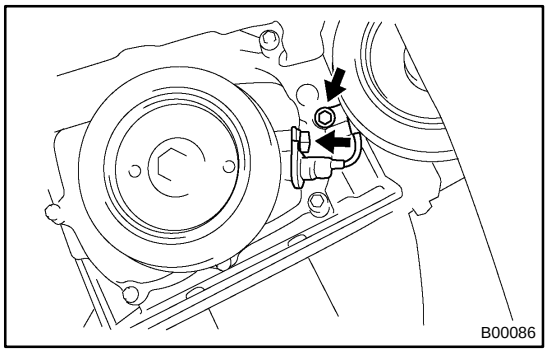

30. REMOVE CRANK POSITION SENSOR

(a) Remove the 2 bolts installing the crank position sensor.

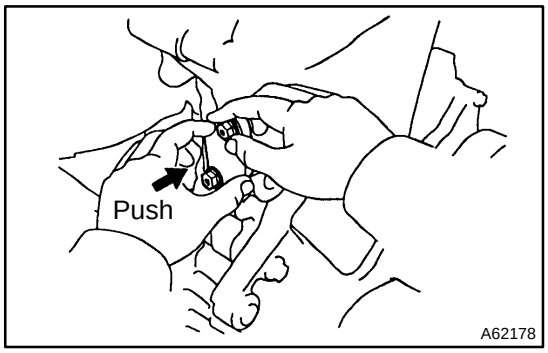

31. REMOVE CHAIN TENSIONER ASSY NO.1

(a) Remove the 2 nuts and chain tensioner.

NOTICE:

Be sure not to revolve the crankshaft without the chain tensioner.

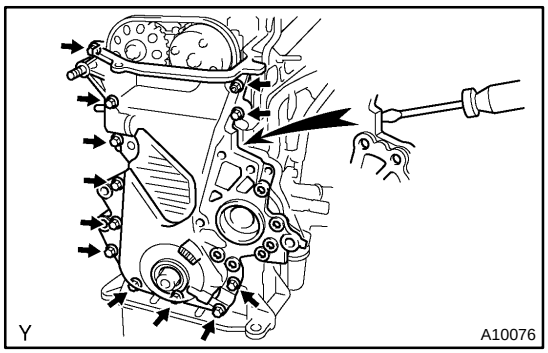

32. REMOVE TIMING CHAIN OR BELT COVER SUB–ASSY

(a) Remove the 11 bolts and nuts.

(b) Using a torx wrench socket (E8), remove the stud bolt.

(c) Remove the timing chain cover by prying the portions between the cylinder head and cylinder block with a screwdriver.

NOTICE:

Be careful no tot damage the contact surfaces of the timing chain cover, cylinder head and cylinder block.

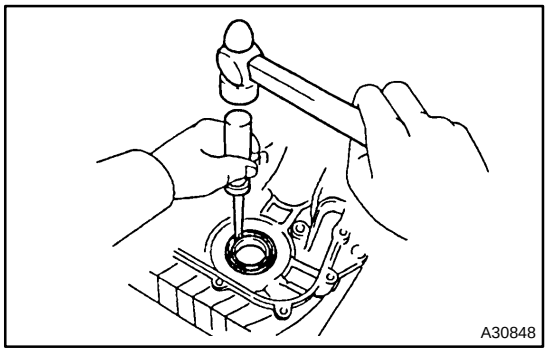

33. REMOVE TIMING GEAR COVER OIL SEAL

(a) Using a screwdriver, remove the oil seal.

34. REMOVE CRANKSHAFT POSITION SENSOR PLATE NO.1

35. REMOVE CHAIN TENSIONER SLIPPER

(a) Remove the bolt and chain tensioner slipper.

36. REMOVE CHAIN VIBRATION DAMPER NO.1

(a) Remove the 2 bolt and chain vibration damper.

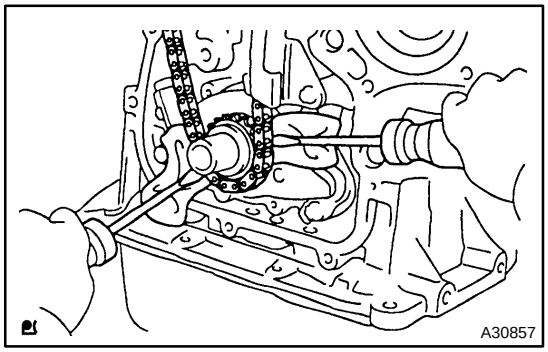

37. REMOVE CHAIN SUB–ASSY

(a) Remove the timing chain with the crankshaft timing gear plying screwdrivers as shown in the illustration.

NOTICE:

- **Put shop rag to protect the engine.**
- **In case of revolving the camshafts with the chain off the sprockets, turn the crankshaft 1/4 revolution for valves not to touch the pistons.**

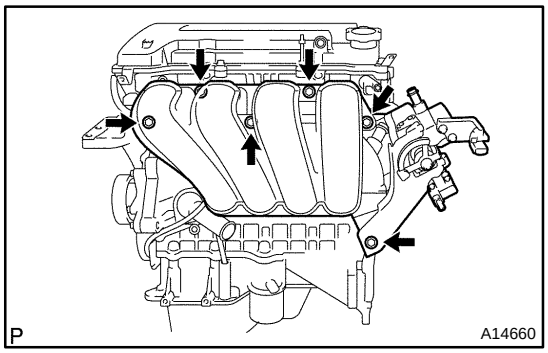

38. REMOVE INTAKE MANIFOLD

(a) Disconnect the 2 water hoses from the throttle body.

(b) Disconnect the 2 vacuum hoses from the intake manihold.

(c) Remove the 4 bolts, 2 nuts, 2 wire brackets, the intake manihold and throttle body assembly.

(d) Remove the gasket from the intake manihold and throttle body assembly.

39. REMOVE OIL LEVEL GAGE SUB–ASSY

(a) Remove the oil level gage from the oil level gage guide.

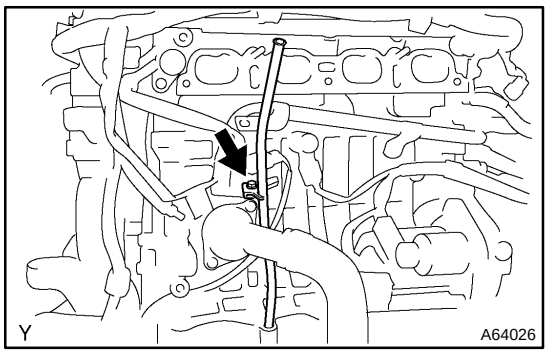

40. REMOVE OIL LEVEL GAGE GUIDE

(a) Remove the bolt and oil level gage guide.

41. SEPARATE WATER BY–PASS PIPE NO.1

(a) Remove the 2 bolts installing the water by–pass pipe.

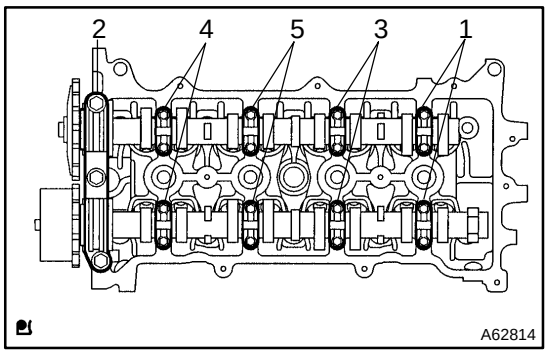

42. REMOVE CAMSHAFT

(a) Uniformly loosen and remove the 19 bearing cap bolts, in several passes, in the sequence shown, and remove the 9 bearing caps, intake and exhaust camshafts.

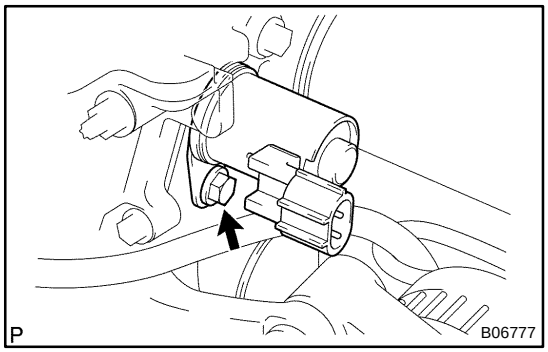

43. REMOVE CAMSHAFT TIMING OIL CONTROL VALVE ASSY

(a) Remove the bolt and camshaft timing oil control valve.

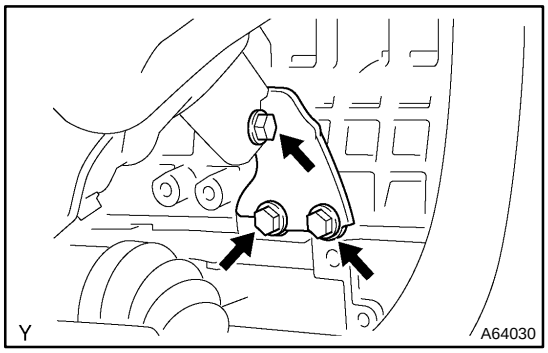

44. REMOVE MANIFOLD STAY

(a) Remove the 3 bolts and manifold stay.

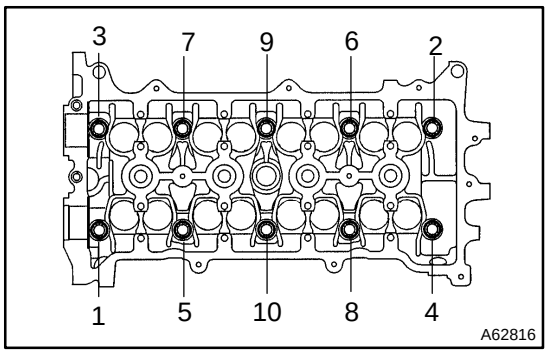

45. REMOVE CYLINDER HEAD SUB–ASSY

(a) Using a 10 mm bi–hexagon wrench, uniformly loosen and remove the 10 cylinder head bolts, in several passes, in the sequence shown, and remove the 10 cylinder head bolts and 10 plate washers.

(b) Remove the cylinder head.

46. REMOVE CYLINDER HEAD GASKET

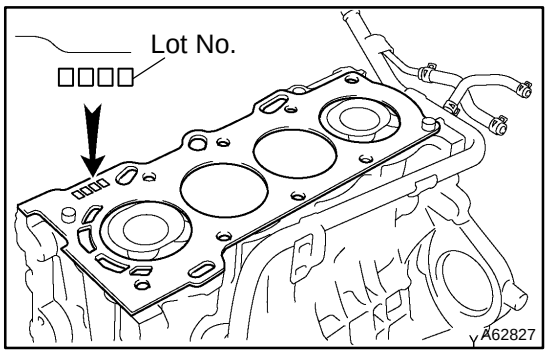

47. INSTALL CYLINDER HEAD GASKET

(a) Place a new cylinder head gasket on the cylinder block surface with the Lot No. stamp upward.

NOTICE:

- **Pay attention to the installation direction.**
- **Place the cylinder head quietly in order not to damage the gasket with the bottom part of the head.**

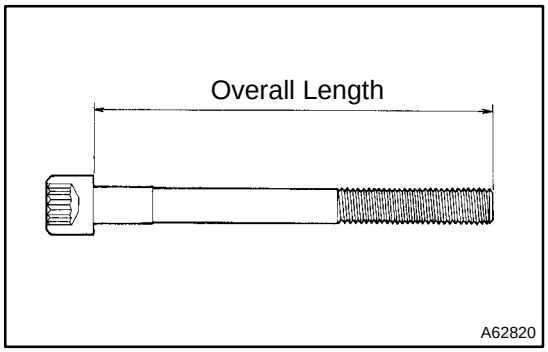

48. INSPECT CYLINDER HEAD SET BOLT

(a) Using a vernier calipers, measure the length of cylinder head bolt from the seat to the end.
Standard length: 146.8 – 148.2 mm (5.780 – 5.835 in.)
Maximum length: 148.5 mm (5.846 in.)

If the length surpasses the maximum, replace the bolt.

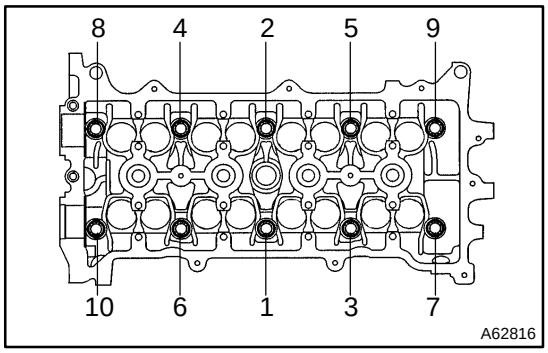

49. INSTALL CYLINDER HEAD SUB–ASSY

HINT:

The cylinder head bolts are tightened in 2 progressive steps.

(a) Apply a light coat of engine oil on the threads and under the heads of the cylinder head bolts.

(b) Using a 10 mm bi–hexagon wrench, install and uniformly tighten the 10 cylinder head bolts and plate washers, in several passes, in the sequence shown.
Torque: 49 N·m (500 kgf·cm, 36 ft·lbf)

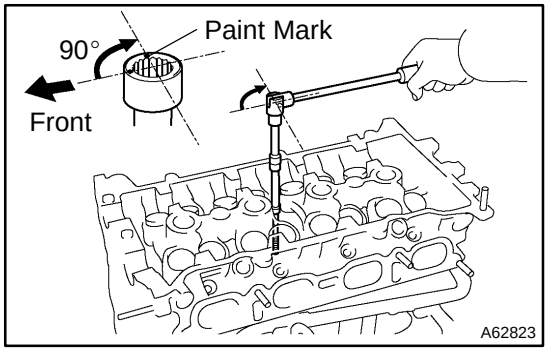

(c) Make the front of the cylinder head bolt with paint.

(d) Retighten the cylinder head bolts 90° in the numerical order shown.

(e) Check that the point marked bolts are moved at 90° angle.

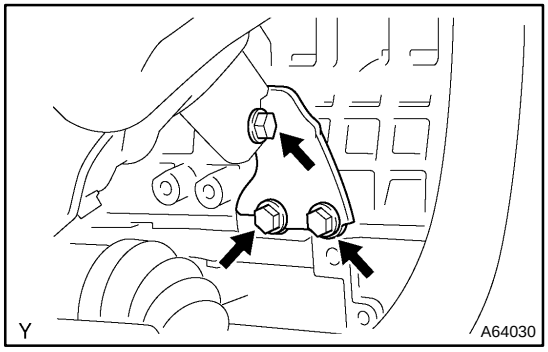

50. INSTALL MANIFOLD STAY

(a) Install the manifold stay with 3 bolts.
Torque: 49 N·m (500 kgf·cm, 36 ft·lbf)

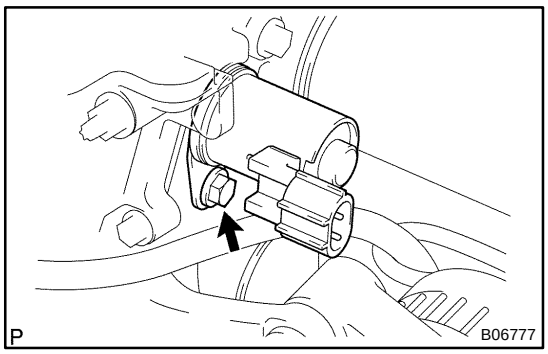

51. INSTALL CAMSHAFT TIMING OIL CONTROL VALVE ASSY

(a) Apply a light coat of engine oil on a new O–ring, and install it to the camshaft timing oil control valve.

(b) Install the camshaft timing oil control valve with the bolt.
Torque: 9.0 N·m (92 kgf·cm, 80 in.·lbf)

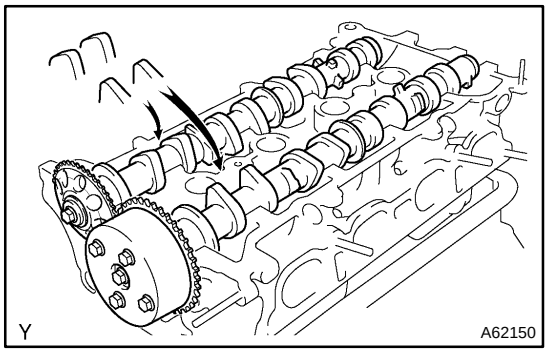

52. INSTALL CAMSHAFT

(a) Apply a light coat of engine oil on the camshaft journals.

(b) Place the 2 camshafts on the cylinder head with the No. 1 cam lobes facing as shown the illustration.

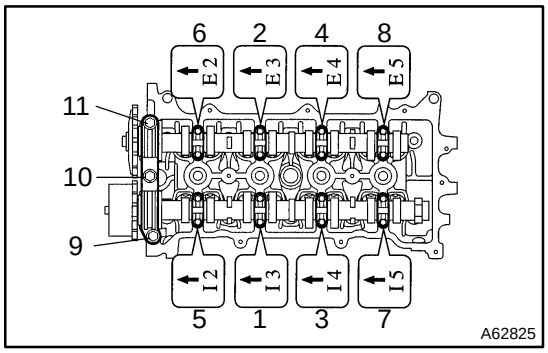

(c) Examine the front marks and numbers and tighten the bolts in the order shown in the illustration.
Torque:
Bearing cap No. 1 23 N·m (235 kgf·cm, 17 ft·lbf)
Bearing cap No. 3 13 N·m (133 kgf·cm, 10 ft·lbf)

53. INSTALL WATER BY–PASS PIPE NO.1

(a) Install the water by–pass pipe with the 2 bolts.
Torque: 9.0 N·m (92 kgf·cm, 80 in.·lbf)

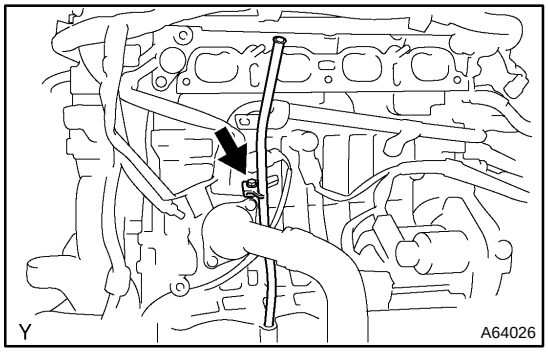

54. INSTALL OIL LEVEL GAGE GUIDE

(a) Apply a light coat of engine oil on a new O–ring, and install it to the oil level gage guide.

(b) Install the oil level gage guide with the bolt.
Torque: 13 N·m (133 kgf·cm, 10 ft·lbf)

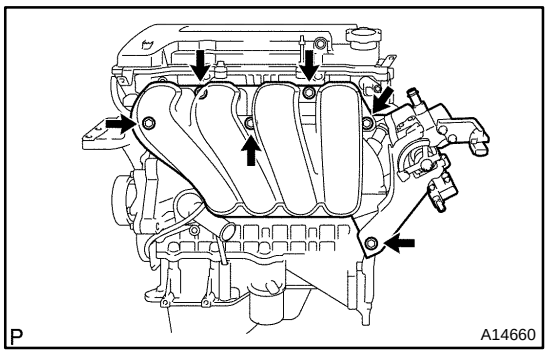

55. INSTALL INTAKE MANIFOLD

(a) Install a new gasket to the intake manifold.

(b) Install the intake manifold and throttle body assembly with the 2 brackets, 4 bolts and 2 nuts. Uniformly tighten the bolts and nuts in several passes.

Torque: 30 N·m (306 kgf·cm, 22 ft·lbf)

(c) Connect the 2 vacuum hoses to the intake manifold.

(d) Connect the 2 water hoses to the throttle body.

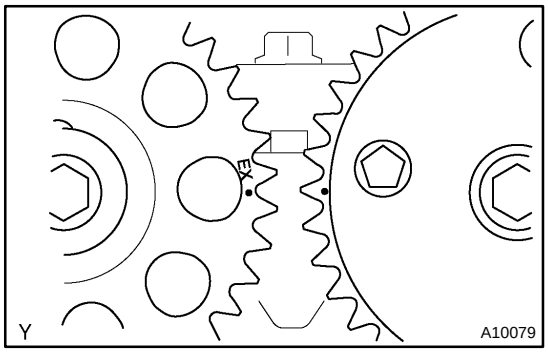

56. INSTALL CHAIN SUB–ASSY

(a) Set No. 1 cylinder to TDC/compression.

(1) Turn the hexagonal wrench head portion of the camshafts, and align the point marks of the camshaft timing sprockets.

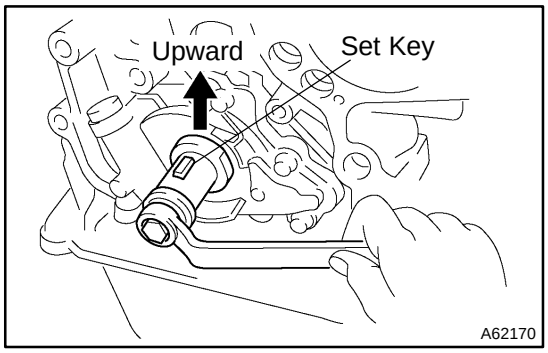

(2) Using a crankshaft pulley bolt, turn the crankshaft and set the set key on the crankshaft upward.

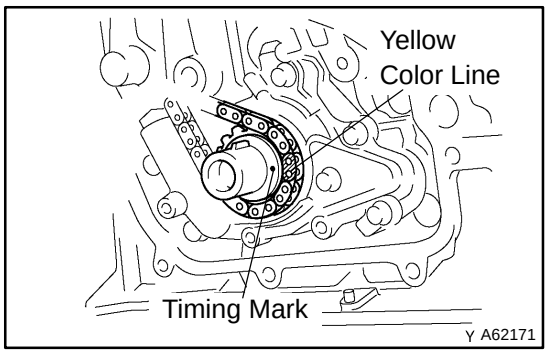

(b) Install the timing chain on the crankshaft timing sprocket with the yellow color link aligned with the timing mark on the crankshaft timing sprocket.

HINT:

Three yellow color links are on the chain.

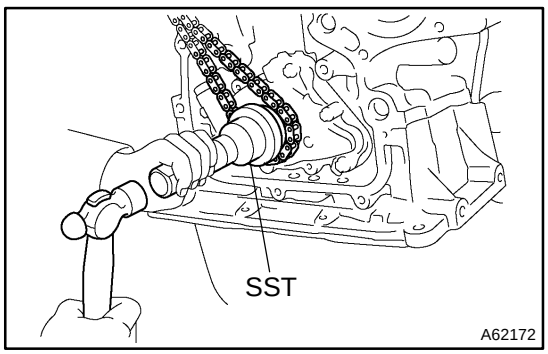

(c) Using SST, install the crankshaft timing sprocket.

SST 09223–22010

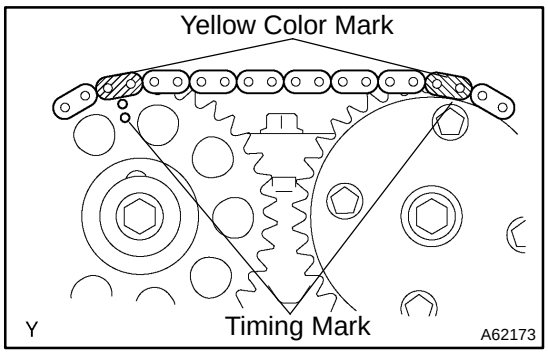

(d) Install the timing chain on the camshaft timing sprockets with the yellow color links aligned with the timing marks on the camshaft timing sprockets.

57. INSTALL CHAIN VIBRATION DAMPER NO.1

(a) Install the chain vibration damper with the 2 bolts.
Torque: 9.0 N·m (92 kgf·cm, 80 in.·lbf)

58. INSTALL CHAIN TENSIONER SLIPPER

(a) Install the chain tensioner slipper with the bolt.
Torque: 19 N·m (194 kgf·cm, 14 ft·lbf)

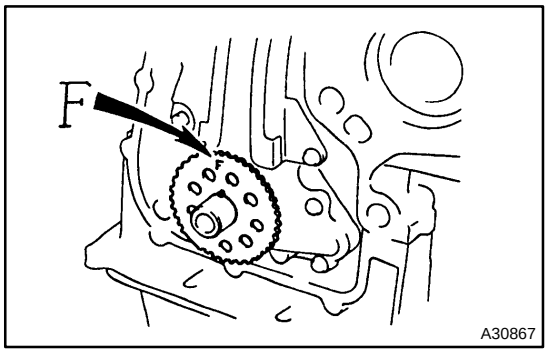

59. INSTALL CRANKSHAFT POSITION SENSOR PLATE NO.1

(a) Install the plate with the ”F” mark facing forward.

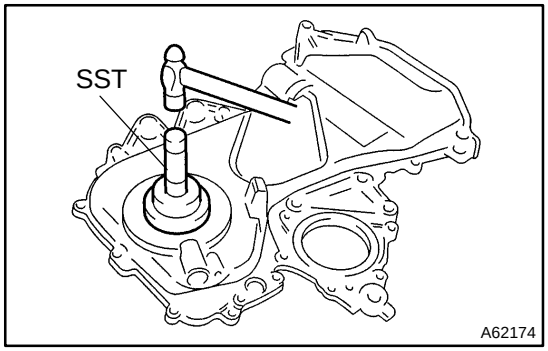

60. INSTALL TIMING GEAR COVER OIL SEAL

(a) Apply MP grease to a new oil seal lip.

(b) Using SST, tap in the oil seal until its surface is flush with the timing chain cover edge.
SST 09223–22010

NOTICE:
Keep the lip off foreign materials.

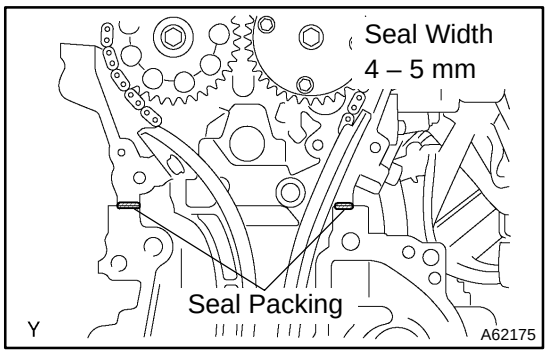

61. INSTALL TIMING CHAIN OR BELT COVER SUB–ASSY

(a) Remove any old packing material from the contact surface.

(b) Apply seal packing in the shape of bead (Diameter 3.5 mm – 4.5 mm (0.1379 – 0.177 in.)) consequently as shown in the illustration.

Seal packing:

Water pump part part No. 08826–00100 or equivalent

Other part part No. 08826–00080 or equivalent.

NOTICE:

- **Remove any oil from the contact surface.**
- **Install the oil pan within 3 minutes after applying seal packing.**
- **Do not put into engine oil within 2 hours after installing.**

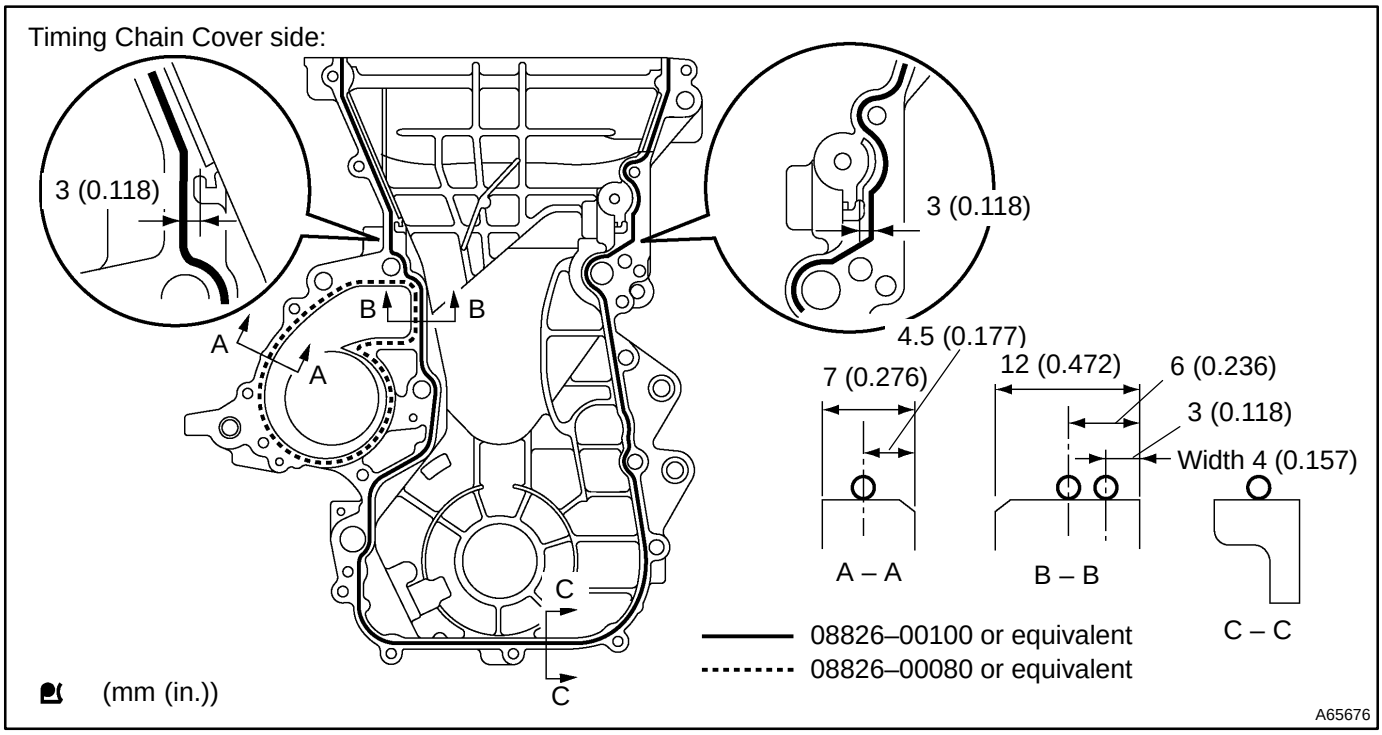

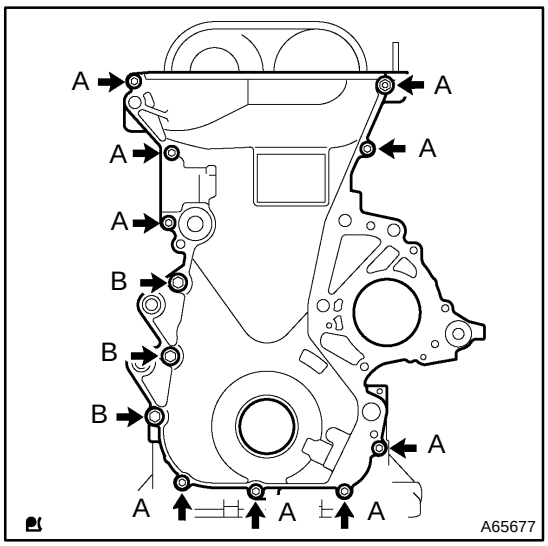

(c) Install the timing chain cover with the 11 bolts and nut.

Torque:

A 13 N·m (133 kgf·cm, 10 ft·lbf)

B 19 N·m (194 kgf·cm, 14 ft·lbf)

(d) Using a torx wrench socket (E8), install the stud bolt.

Torque: 9.5 N·m (97 kgf·cm, 84 in.·lbf)

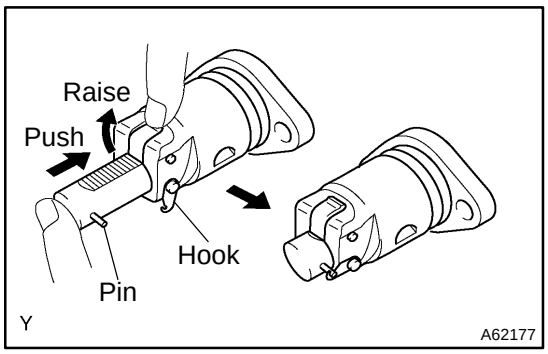

62. INSTALL CHAIN TENSIONER ASSY NO.1

(a) Check the O–ring is clean, and set the hook as shown in the illustration.

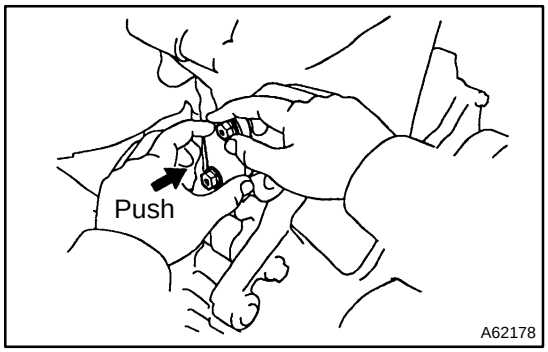

(b) Apply engine oil to the chain tensioner and install it withe 2 nuts.

Torque: 9.0 N·m (92 kgf·cm, 80 in.·lbf)

NOTICE:

When installing the tensioner, set the hook again if the hook release the plunger.

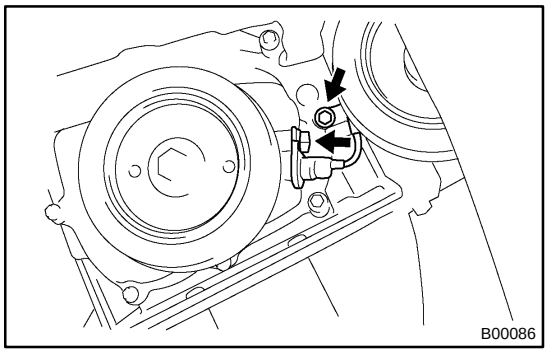

63. INSTALL CRANK POSITION SENSOR

(a) Install the crank position sensor with the 2 bolts.

Torque: 9.0 N·m (92 kgf·cm, 80 in.·lbf)

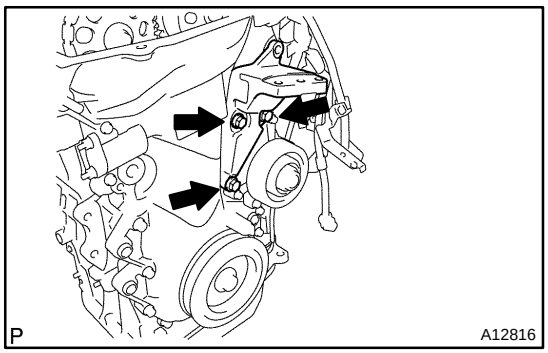

64. INSTALL TRANSVERSE ENGINE ENGINE MOUNTING BRACKET

(a) Install the transverse engine engine mounting bracket with the 3 bolts.

Torque: 47 N·m (479 kgf·cm, 35 ft·lbf)

65. INSTALL WATER PUMP ASSY (See page 16–8)

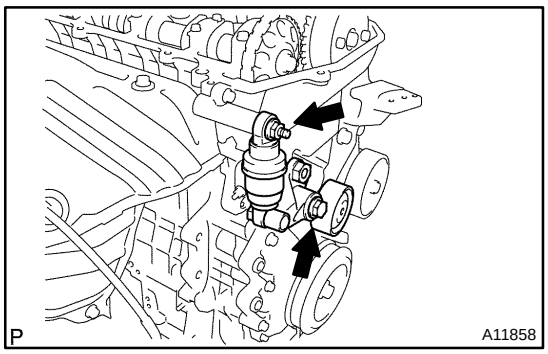

66. INSTALL V–RIBBED BELT TENSIONER ASSY

(a) Install the V–ribbed belt tensioner with the nut and bolt.
Torque:
Nut 29 N·m (296 kgf·cm, 21 ft·lbf)
Bolt 69 N·m (704 kgf·cm, 51 ft·lbf)

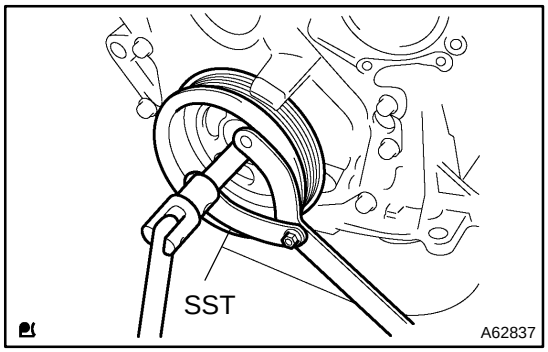

67. INSTALL CRANKSHAFT PULLEY

(a) Align the pulley set key with the key groove of the pulley, and slide on the pulley.

(b) Using SST, install the crankshaft pulley bolt.
SST 09960–10010 (09962–01000, 09963–01000)
Torque: 138 N·m (1,407 kgf·cm, 102 ft·lbf)

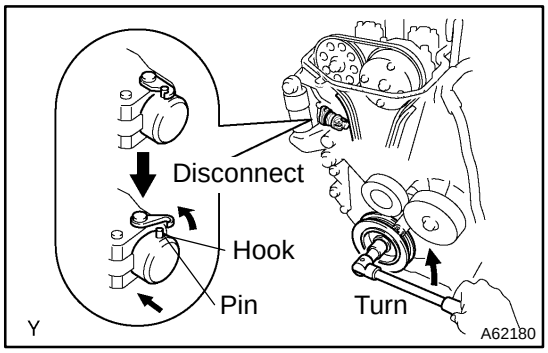

(c) Turn the crankshaft counter clockwise, and disconnect the plunger knock pin form the hook.

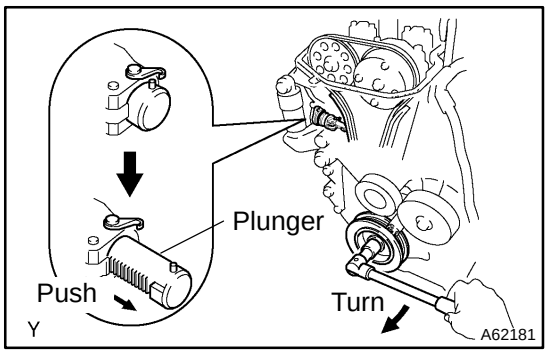

(d) Turn the crankshaft clockwise, and check that the slipper is pushed by the plunger.

HINT:
If the plunger does not spring out, press the slipper into the chain tensioner with a screwdriver so that the hook is released from the knock pin and the plunger springs out.

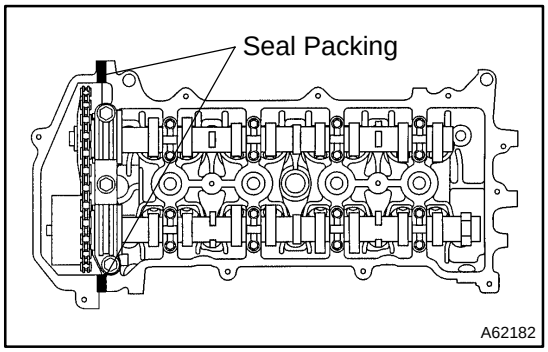

68. INSTALL CYLINDER HEAD COVER SUB–ASSY

(a) Remove any old pacing (FIPG) material.

(b) Apply seal packing to 2 locations as shown in the illustration.
Seal packing: Part No. 08826–00080 or equivalent

NOTICE:
- **Remove any oil from the contact surface.**
- **Install the cylinder head cover within 3 minutes after applying seal packing.**
- **Do not put into engine oil 2 hours after installing.**

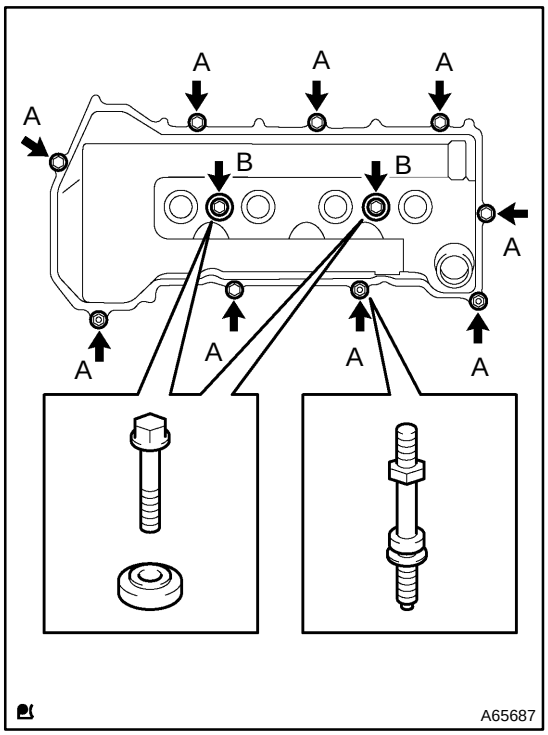

(c) Install the cylinder head cover and 3 cable brackets with the 9 bolts, 2 seal washers and 2 nuts. Uniformly tighten the bolts and nuts, in the several passes.
Torque:
A 11 N·m (112 kgf·cm, 8 ft·lbf)
B 9.0 N·m (92 kgf·cm, 80 in.·lbf)

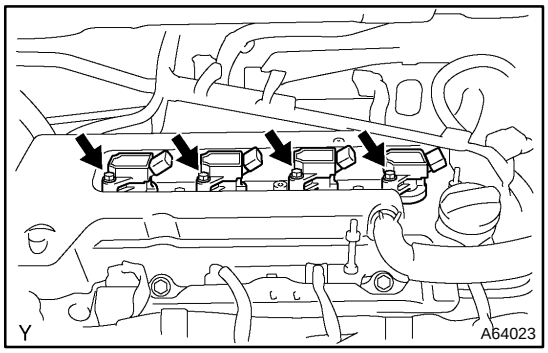

69. INSTALL IGNITION COIL ASSY
(a) Install the 4 ignition coils with the 4 bolts.
Torque: 9.0 N·m (92 kgf·cm, 80 in.·lbf)

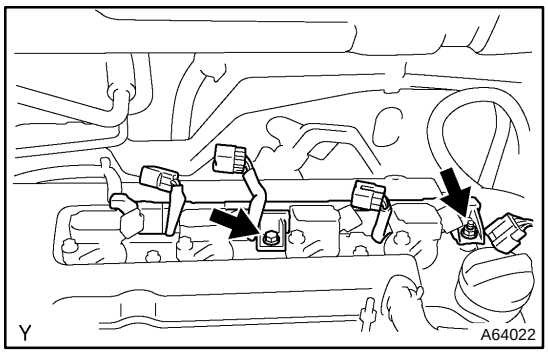

70. INSTALL ENGINE WIRE
(a) Install the engine wire with the bolt and nut.
Torque: 9.0 N·m (92 kgf·cm, 80 in.·lbf)

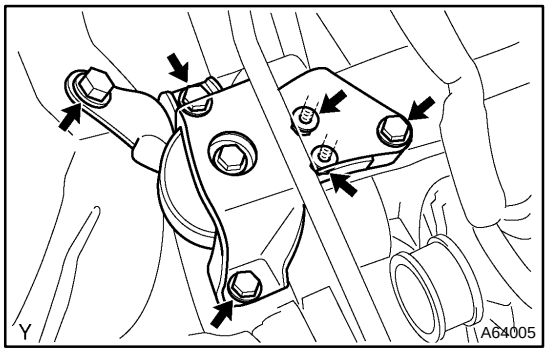

71. INSTALL ENGINE MOUNTING INSULATOR SUB–ASSY RH
(a) Install the engine mounting insulator with the 4 bolts and 2 nuts.
Torque: 52 N·m (530 kgf·cm, 38 ft·lbf)

72. INSTALL EXHAUST PIPE ASSY FRONT (See page 15–2)
73. INSTALL VANE PUMP ASSY (See page 51–8)
74. INSTALL GENERATOR ASSY (See page 19–16)

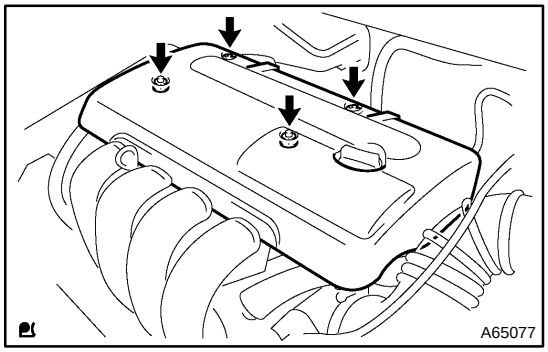

75. INSTALL CYLINDER HEAD COVER NO.2
(a) Install the cylinder head cover with the 2 nuts and 2 clips.
Torque: 7.0 N·m (71 kgf·cm, 62 in.·lbf)

76. INSTALL FRONT WHEEL RH
Torque: 103 N·m (1,050 kgf·cm, 76 ft·lbf)
77. ADD COOLANT (See page 16–7)
78. INSPECT COMPRESSION (See page 14–1)
SST 09992–00500
79. INSPECT CO/HC (See page 14–1)
80. INSPECT IGNITION TIMING (See page 14–1)
SST 09843–18040
81. CHECK ENGINE COOLANT LEAK (See page 16–7)
82. CHECK ENGINE OIL LEAK

ENGINE ASSEMBLY

140OC–03

INSPECTION

1. **INSPECT COOLANT (See page 16–1)**
2. **INSPECT ENGINE OIL (See page 17–1)**
3. **INSPECT BATTERY (See page 19–13)**
4. **INSPECT AIR CLEANER FILTER ELEMENT SUB–ASSY**
5. **INSPECT SPARK PLUG (See page 18–2)**
6. **INSPECT FAN AND GENERATOR V BELT**

HINT:

You don't need to check the belt deflection because auto tensioner is adopted.

7. **INSPECT IGNITION TIMING**

(a) Warm up engine.

(b) When using hand–held tester or OBDII scan tool.

(1) Connect the hand–held tester or OBDII scan tool to the DLC3.

HINT:

Please refer to the hand–held tester or OBDII scan tool operator's manual for further details.

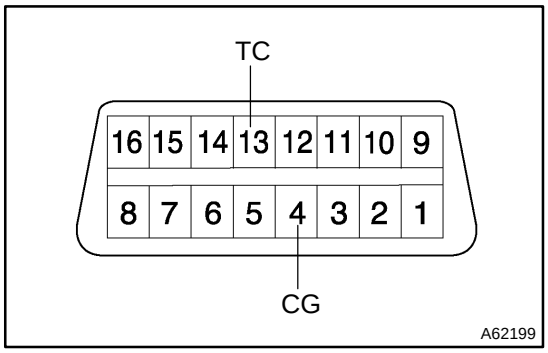

(c) When not using hand–held tester or OBDII scan tool.

(1) Using SST, connect terminal 13 (TC) and 4 (CG) of the DLC3.

SST 09843–18040

NOTICE:

- **Be sure not to connect incorrectly. It causes breakage of the engine.**
- **Turn OFF all electrical systems.**
- **Operate the inspection when the cooling fan motor is turned OFF**

(2) Remove the 2 nuts, 2 clips and cylinder head cover.

(3) Pull out the wire harness as shown in the illustration.

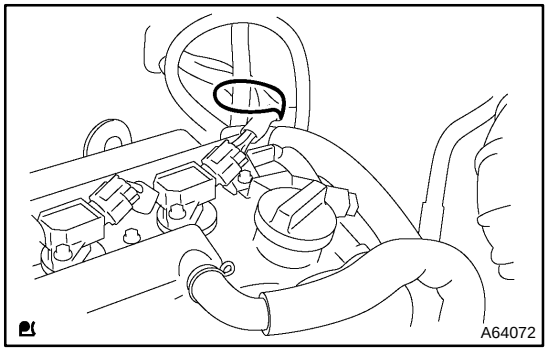

(4) Connect the clip of the timing light to the engine.

NOTICE:

- **Use a timing light which can detect the first signal.**
- **After checking, be sure to tape the wire harness.**

(5) Inspect ignition timing at idle.

Ignition timing: 8 – 12°BTDC

NOTICE:

When checking the ignition timing, the transmission is at neutral position.

HINT:

After engine rpm is kept at 1,000 – 1,300 rpm for 5 seconds, check that it returns idle speed.

(6) Disconnect the terminal 13 (TC) and 4 (CG) of the DLC3.
(7) Inspect ignition timing at idle.
Ignition timing: 10 – 18 °BTDC
(8) Confirm that ignition timing moves to advanced angle side when the engine rpm is increased.
(9) Remove the timing light.
(10) Install cylinder head cover No.2 with the 2 nuts and 2 clips.
Torque: 7.0 N·m (71 kgf·cm, 62 in.·lbf)

8. INSPECT ENGINE IDLE SPEED

(a) Warm up engine.
(b) When using hand–held tester or OBDII scan tool.
(1) Connect the hand–held tester or OBDII scan tool to the DLC3.

HINT:
Please refer to the hand – held tester or OBDII scan tool operator's manual for further details.

(c) Check the idle speed.
Idle speed: 650 – 750 rpm

NOTICE:
- **Check idle speed with cooling fan OFF.**
- **Switch off all accessories and air conditioning.**

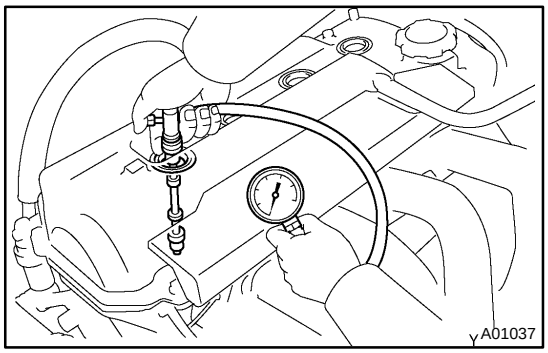

9. INSPECT COMPRESSION

(a) Warm up and stop engine.
(b) Remove ignition coil.
(c) Remove spark plugs.
(d) Inspect cylinder compression pressure.
SST 09992–00500
(1) Insert a compression gauge into the spark plug hole.
(2) Fully open the throttle.
(3) While cranking the engine, measure the compression pressure.
Compression pressure
1,300 kPa (13.3 kgf·cm^2, 189 psi)
Minimum pressure: 1,000 kPa (10.2 kgf·cm^2, 145 psi)
Difference between each cylinder:
100 kPa (1.0 kgf·cm^2, 15 psi)

NOTICE:
- **Always use a fully charged battery to obtain engine speed of 250 rpm or more.**
- **Check other cylinder's compression pressure in the same way.**
- **This measurement must be done in as short a time as possible.**

(4) If the cylinder compression in one more cylinders is low, pour a small amount of engine oil into the cylinder through the spark plug hole and repeat steps (1) through (3) for cylinders with low compression.

HINT:

- If adding oil helps the compression, it is likely that the piston rings and/or cylinder bore are worn or damaged.
- If pressure stays low, a valve may be sticking or seating is improper, or there may be leakage past the gasket.

10. INSPECT CO/HC

(a) Start the engine.

(b) Race engine at 2,500 rpm for approx. 180 seconds.

(c) Insert CO/HC meter testing probe at least 40 cm (1.3 ft) into tailpipe during idling.

(d) Immediately check CO/HC concentration at idle and/or 2,500 rpm.

HINT:

- Complete the measuring within 3 minutes.
- When doing the 2 mode (idle and 2,500 rpm) test, these measuring orders are prescribed by the applicable local regulations.

(e) If the CO/HC concentration does not comply with regulations, troubleshoot in the order given below.

(1) Check heated oxygen sensor operation. (See page 12–6)

(2) See the table below for possible causes, and then inspect and correct the applicable causes if necessary.

CO	HC	Problems	Causes
Normal	High	Rough idle	3. Faulty ignitions: • Incorrect timing • Fouled, shorted or improperly gapped plugs 4. Incorrect valve clearance 5. Leaky intake and exhaust valves 6. Leaky cylinders
Low	High	Rough idle (Fluctuating HC reading)	1. Vacuum leaks: • PCV hoses • Intake manifold • Throttle body • ISC valve • Brake booster line 2. Lean mixture causing misfire
High	High	Rough idle (Black smoke form exhaust)	1. Restricted air filter 2. Plugged PCV valve 3. Faulty EFI systems: • Faulty pressure regulator • Defective water temperature sensor • DEFECTIVE Air–flow meter • Faulty ECM • Faulty injectors • Faulty throttle position sensor

ENGINE REAR OIL SEAL

140ON–01

REPLACEMENT

1. **REMOVE MANUAL TRANSAXLE ASSY (M/T TRANSAXLE) (See page 41–17)**
2. **REMOVE AUTOMATIC TRANSAXLE ASSY (A/T TRANSAXLE) (See page 40–9)**
3. **REMOVE CLUTCH COVER ASSY (M/T TRANSAXLE) (See page 42–18)**

(a) Remove the 6 bolts and clutch cover.

4. **REMOVE CLUTCH DISC ASSY (M/T TRANSAXLE) (See page 42–18)**

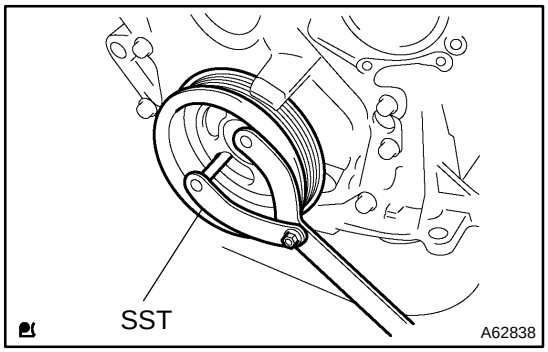

5. **REMOVE FLYWHEEL SUB–ASSY (M/T TRANSAXLE)**

(a) Fix the crankshaft with SST, then remove the 8 bolts and flywheel.
SST 09960–10010 (09962–01000, 09963–01000)

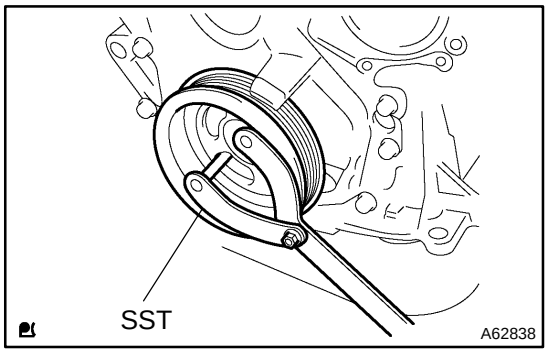

6. **REMOVE DRIVE PLATE & RING GEAR SUB–ASSY (A/T TRANSAXLE)**

(a) Fix the crankshaft with SST, then remove the 8 bolts and drive plate & ring gear.
SST 09960–10010 (09962–01000, 09963–01000)

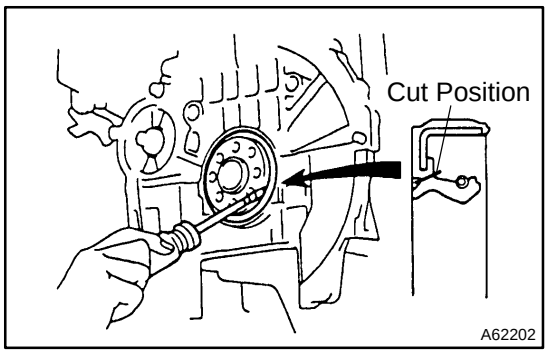

7. **REMOVE ENGINE REAR OIL SEAL**

(a) Using a knife, cut off the oil seal lip.
(b) Using a screwdriver with taping its tip, pry out the oil seal.

NOTICE:
After the removal, check if the crankshaft is not damaged. If there is, mend it with a sandpaper (#400).

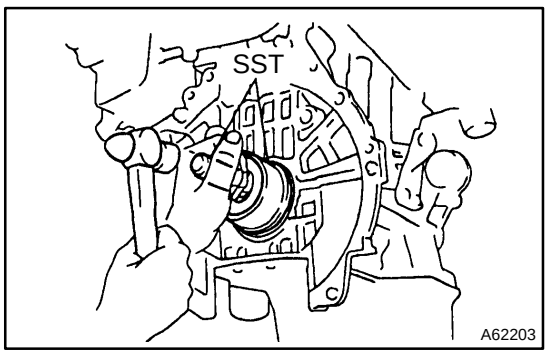

8. **INSTALL ENGINE REAR OIL SEAL**

(a) Apply MP grease to a new oil seal lip.

NOTICE:
Keep the lip off foreign materials.

(b) Using SST, tap in the oil seal until its surface is flush with the rear oil seal retainer edge.
SST 09223–15020, 09950–70010 (09951–07100)

NOTICE:
Wipe off extra grease on the crankshaft.

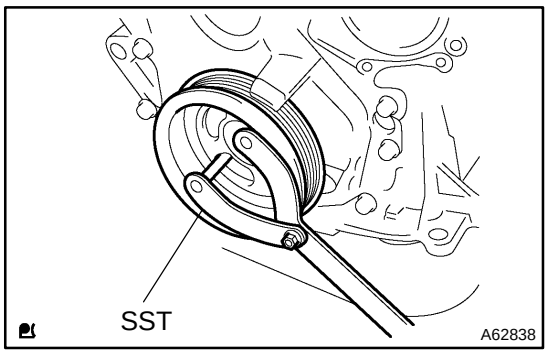

9. INSTALL FLYWHEEL SUB–ASSY (M/T TRANSAXLE)

(a) Fix the crankshaft with SST.
SST 09960–10010 (09962–01000, 09963–01000)

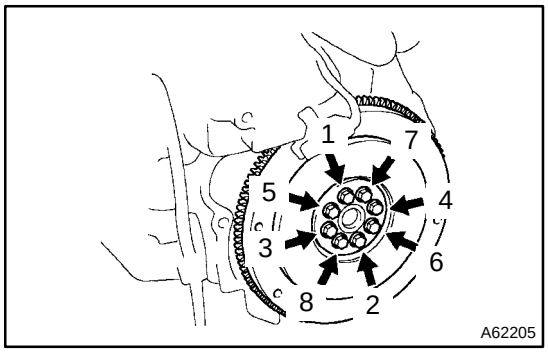

(b) Clean the bolt and bolt hole.
(c) Apply adhesive to the bolts.
Adhesive:
Part No. 09330–00070, THREE BOND or equivalent.
(d) Install and uniformly tighten the 8 bolts, in several passes, in the sequence shown.
Torque: 49 N·m (500 kgf·cm, 36 ft·lbf)

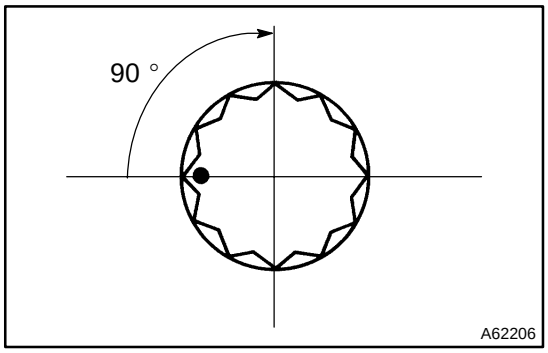

(e) Mark the bolts with paint.
(f) Retighten the bolts by an additional 90°.
(g) Check that the point marked bolts are moved at 90° angle.

10. INSTALL CLUTCH DISC ASSY (M/T TRANSAXLE) (See page 42–18)
SST 09301–00210

11. INSTALL CLUTCH COVER ASSY (M/T TRANSAXLE) (See page 42–18)

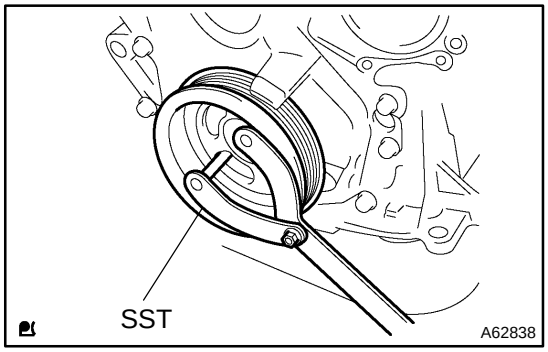

12. INSTALL DRIVE PLATE & RING GEAR SUB–ASSY (A/T TRANSAXLE)

(a) Fix the crankshaft with SST.
SST 09960–10010 (09962–01000, 09963–01000)

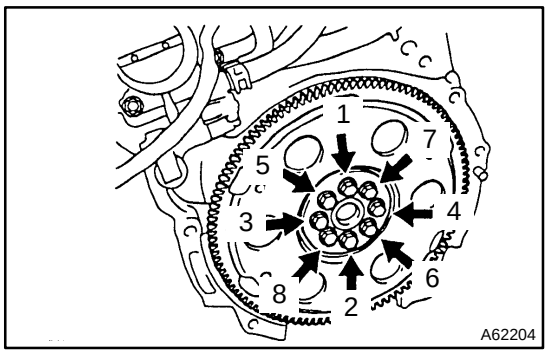

(b) Clean the bolt and bolt hole.
(c) Apply adhesive to the bolts.
Adhesive:
Part No. 09330–00070, THREE BOND or equivalent.
(d) Install and uniformly tighten the 8 bolts, in several passes, in the sequence shown.
(e) Fix the crankshaft with SST.
Torque: 88 N·m (897 kgf·cm, 65 ft·lbf)

13. INSTALL MANUAL TRANSAXLE ASSY (M/T TRANSAXLE) (See page 41–17)
14. INSTALL AUTOMATIC TRANSAXLE ASSY (A/T TRANSAXLE) (See page 40–9)

FAN AND GENERATOR V BELT

140OD–01

REPLACEMENT

1. REMOVE ENGINE UNDER COVER RH

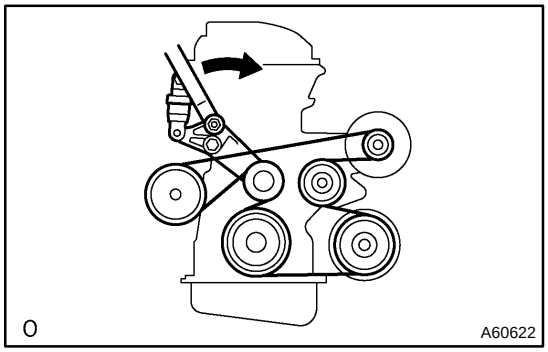

2. REMOVE FAN AND GENERATOR V BELT

(a) Turn the V–ribbed belt tensioner slowly clockwise and loosen it. Then, remove the fan and generator V belt and put back the V–ribbed belt tensioner little by little and fix it quietly.

PARTIAL ENGINE ASSY (April, 2003)

140OF–03

COMPONENTS

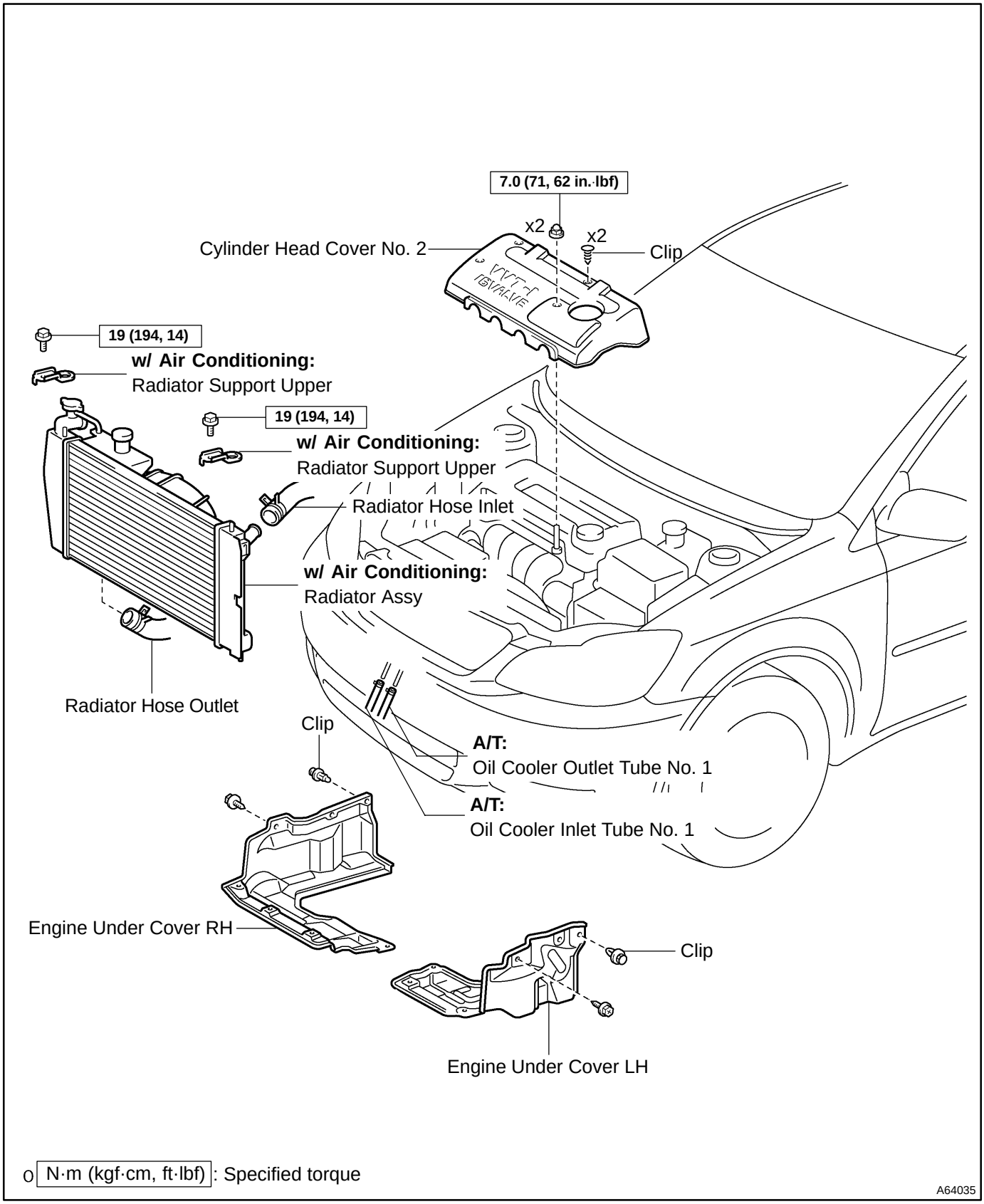

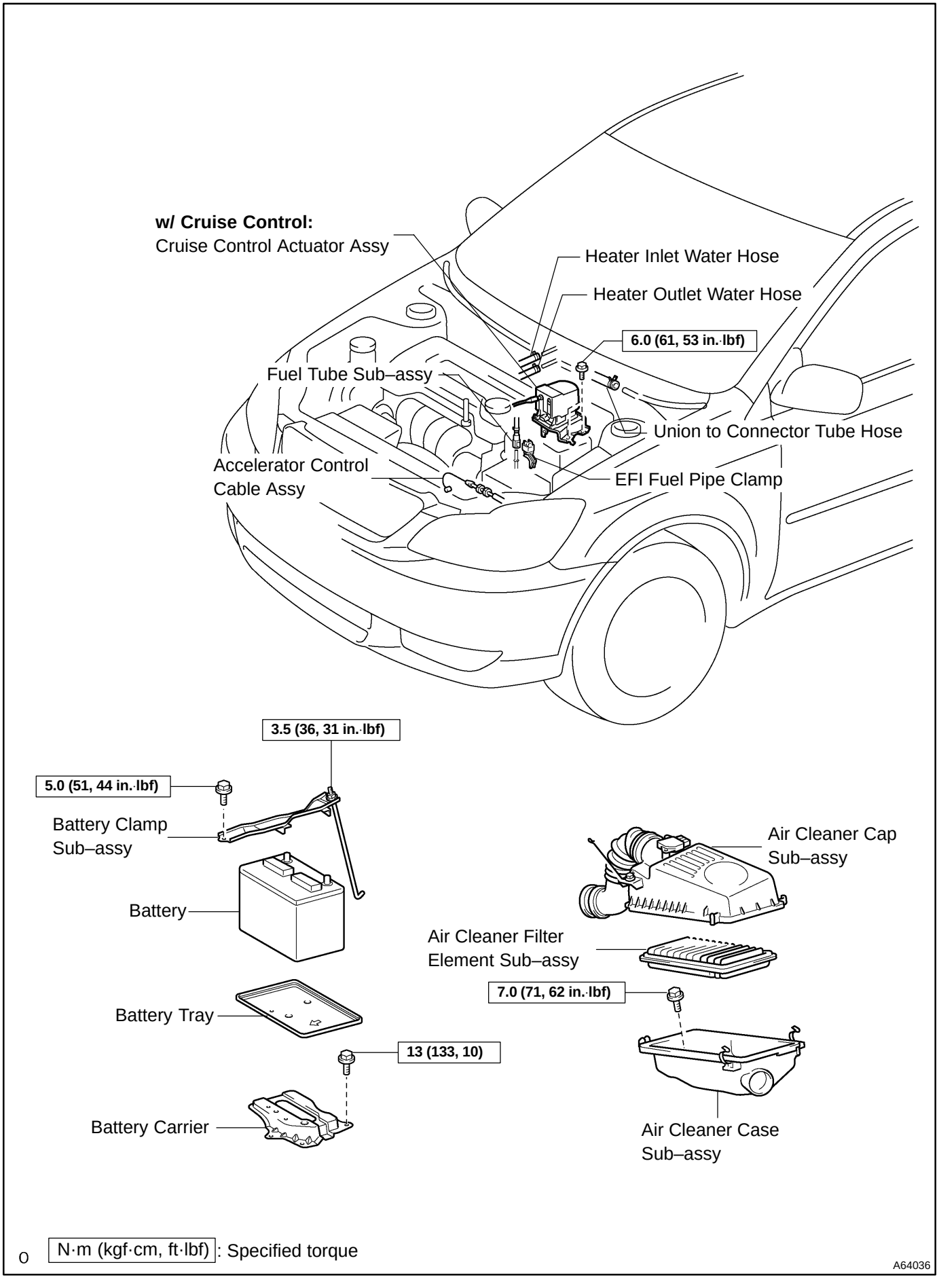
w/ Cruise Control:
Cruise Control Actuator Assy
Heater Inlet Water Hose
Heater Outlet Water Hose
6.0 (61, 53 in.·lbf)
Fuel Tube Sub–assy
Union to Connector Tube Hose
Accelerator Control Cable Assy
EFI Fuel Pipe Clamp
3.5 (36, 31 in.·lbf)
5.0 (51, 44 in.·lbf)
Battery Clamp Sub–assy
Battery
Battery Tray
13 (133, 10)
Battery Carrier
Air Cleaner Cap Sub–assy
Air Cleaner Filter Element Sub–assy
7.0 (71, 62 in.·lbf)
Air Cleaner Case Sub–assy
o N·m (kgf·cm, ft·lbf): Specified torque
A64036

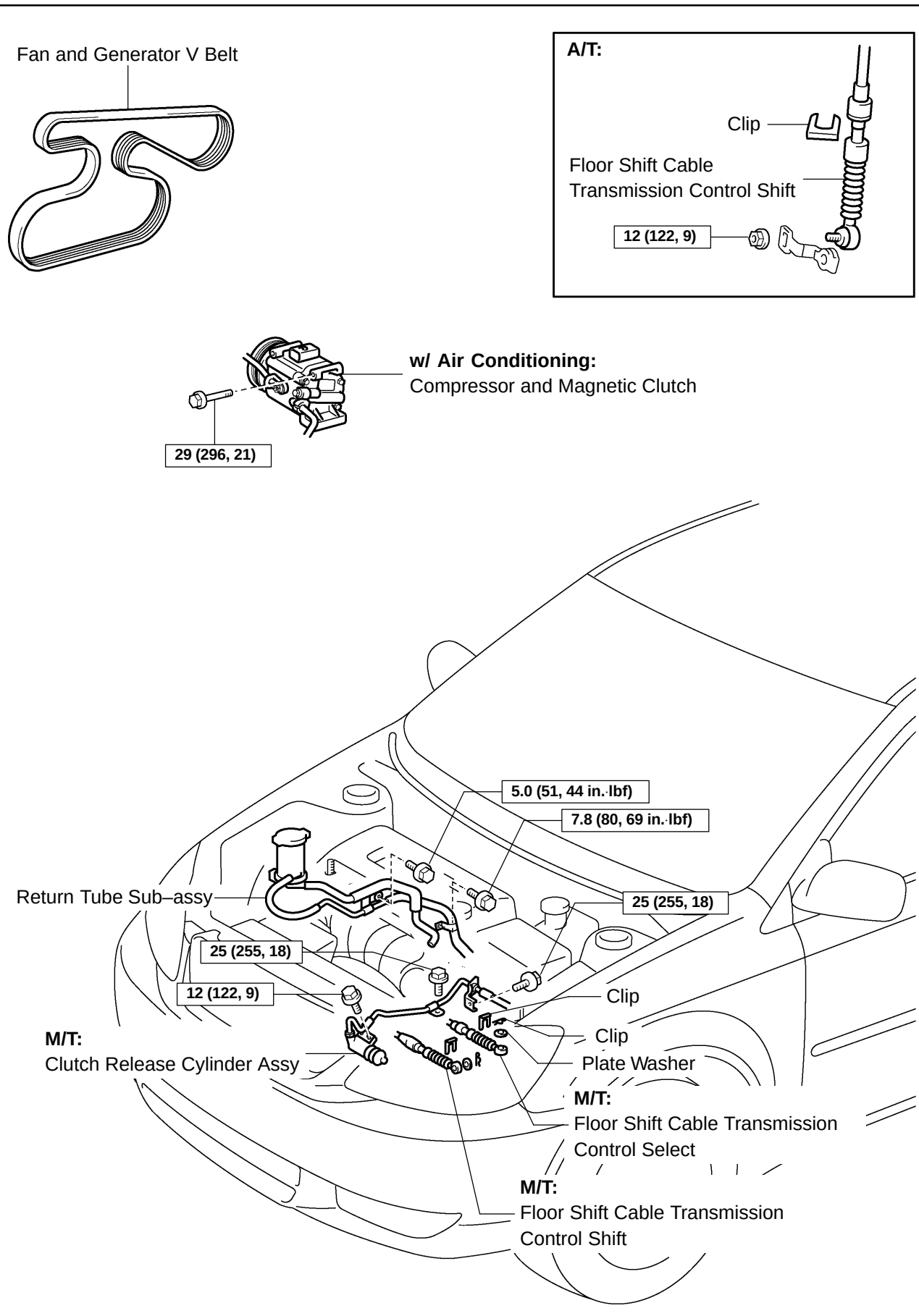
Fan and Generator V Belt
A/T:
Clip
Floor Shift Cable
Transmission Control Shift
12 (122, 9)
w/ Air Conditioning:
Compressor and Magnetic Clutch
29 (296, 21)
5.0 (51, 44 in.·lbf)
7.8 (80, 69 in.·lbf)
Return Tube Sub–assy
25 (255, 18)
25 (255, 18)
12 (122, 9)
Clip
Clip
Plate Washer
M/T:
Clutch Release Cylinder Assy
M/T:
Floor Shift Cable Transmission
Control Select
M/T:
Floor Shift Cable Transmission
Control Shift
o N·m (kgf·cm, ft·lbf) : Specified torque
A64037

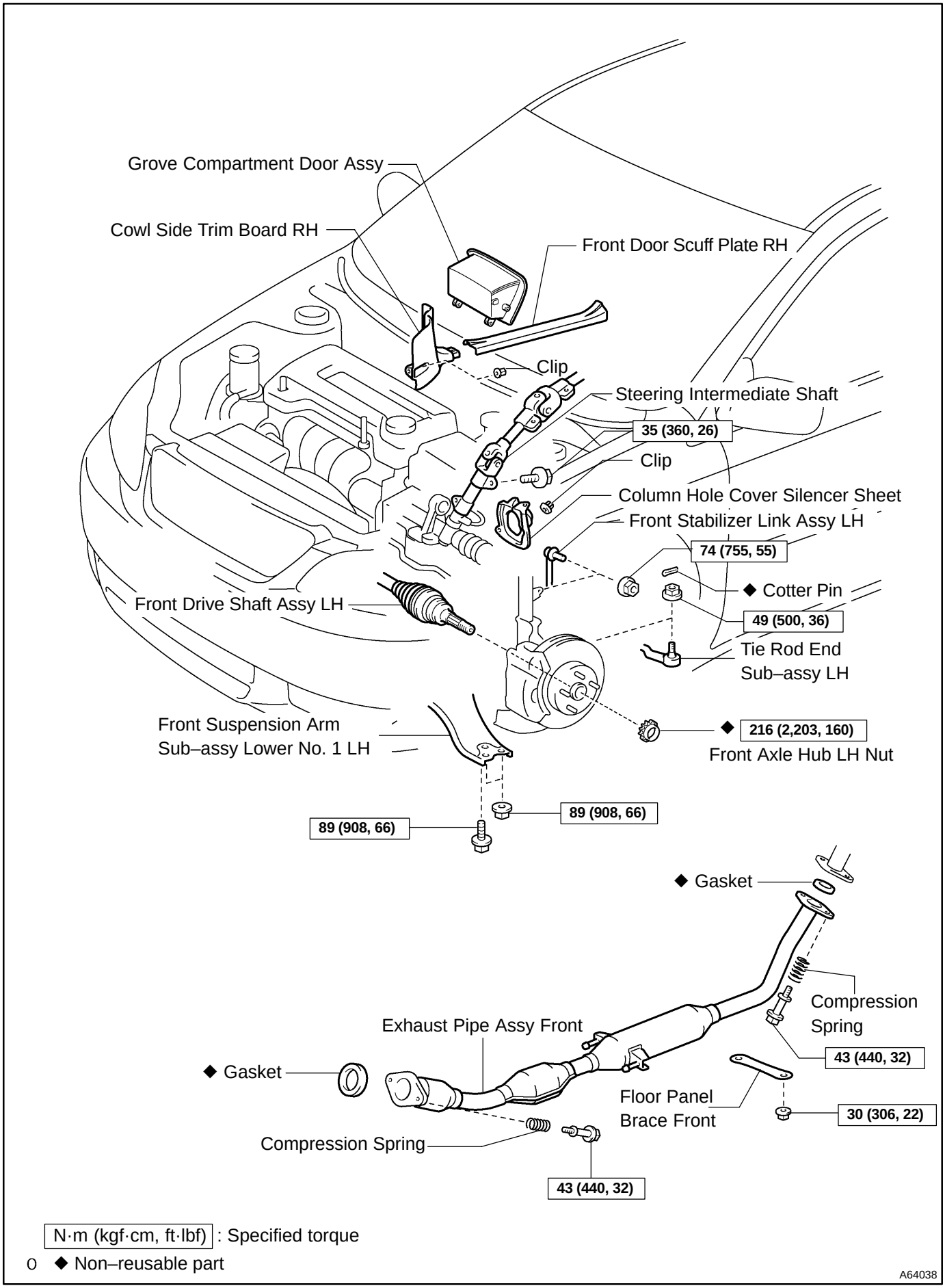
Grove Compartment Door Assy
Cowl Side Trim Board RH
Front Door Scuff Plate RH
Clip
Steering Intermediate Shaft
35 (360, 26)
Clip
Column Hole Cover Silencer Sheet
Front Stabilizer Link Assy LH
74 (755, 55)
◆ Cotter Pin
49 (500, 36)
Front Drive Shaft Assy LH
Tie Rod End
Sub–assy LH
Front Suspension Arm
Sub–assy Lower No. 1 LH
◆ 216 (2,203, 160)
Front Axle Hub LH Nut
89 (908, 66)
89 (908, 66)
◆ Gasket
Compression
Spring
Exhaust Pipe Assy Front
43 (440, 32)
◆ Gasket
Floor Panel
Brace Front
30 (306, 22)
Compression Spring
43 (440, 32)
N·m (kgf·cm, ft·lbf) : Specified torque
◆ Non–reusable part
A64038

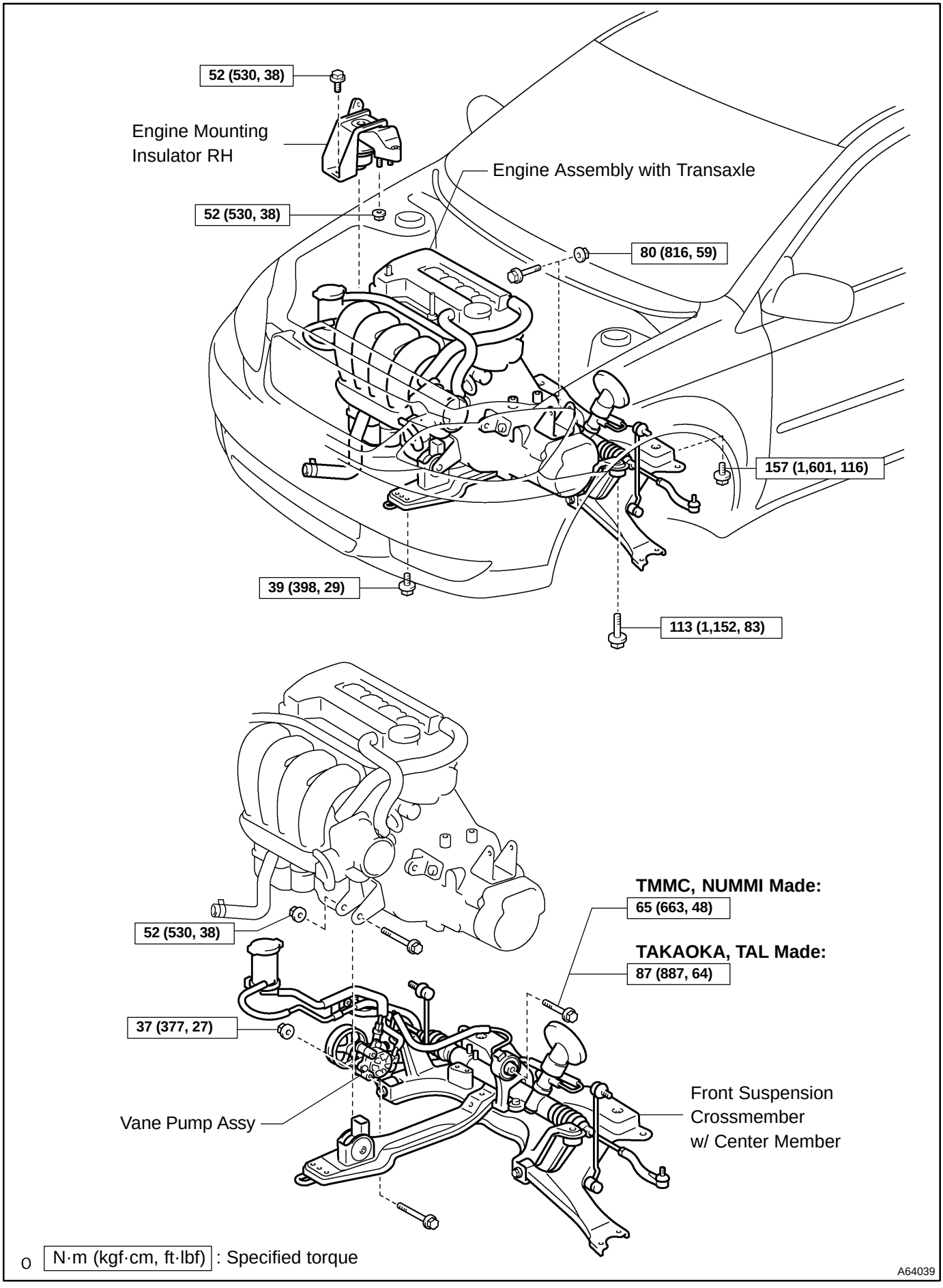
52 (530, 38)
Engine Mounting Insulator RH
Engine Assembly with Transaxle
52 (530, 38)
80 (816, 59)
157 (1,601, 116)
39 (398, 29)
113 (1,152, 83)
TMMC, NUMMI Made:
65 (663, 48)
52 (530, 38)
TAKAOKA, TAL Made:
87 (887, 64)
37 (377, 27)
Front Suspension Crossmember w/ Center Member
Vane Pump Assy
o N·m (kgf·cm, ft·lbf) : Specified torque
A64039

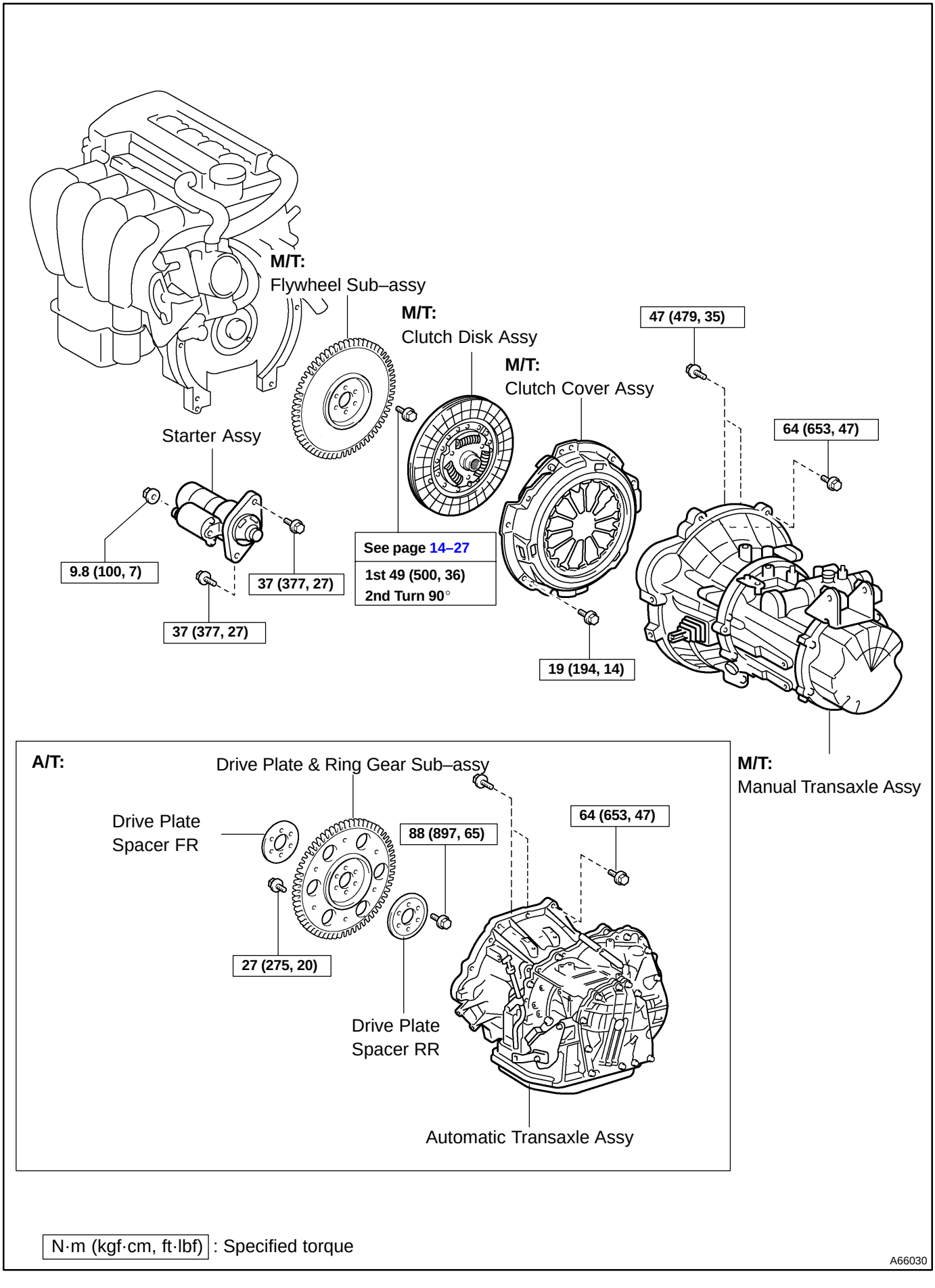
M/T:
Flywheel Sub–assy
M/T:
Clutch Disk Assy
M/T:
Clutch Cover Assy
47 (479, 35)
64 (653, 47)
Starter Assy
9.8 (100, 7)
37 (377, 27)
37 (377, 27)
See page 14–27
1st 49 (500, 36)
2nd Turn 90°
19 (194, 14)
M/T:
Manual Transaxle Assy
A/T:
Drive Plate & Ring Gear Sub–assy
Drive Plate
Spacer FR
88 (897, 65)
64 (653, 47)
27 (275, 20)
Drive Plate
Spacer RR
Automatic Transaxle Assy
N·m (kgf·cm, ft·lbf) : Specified torque
A66030

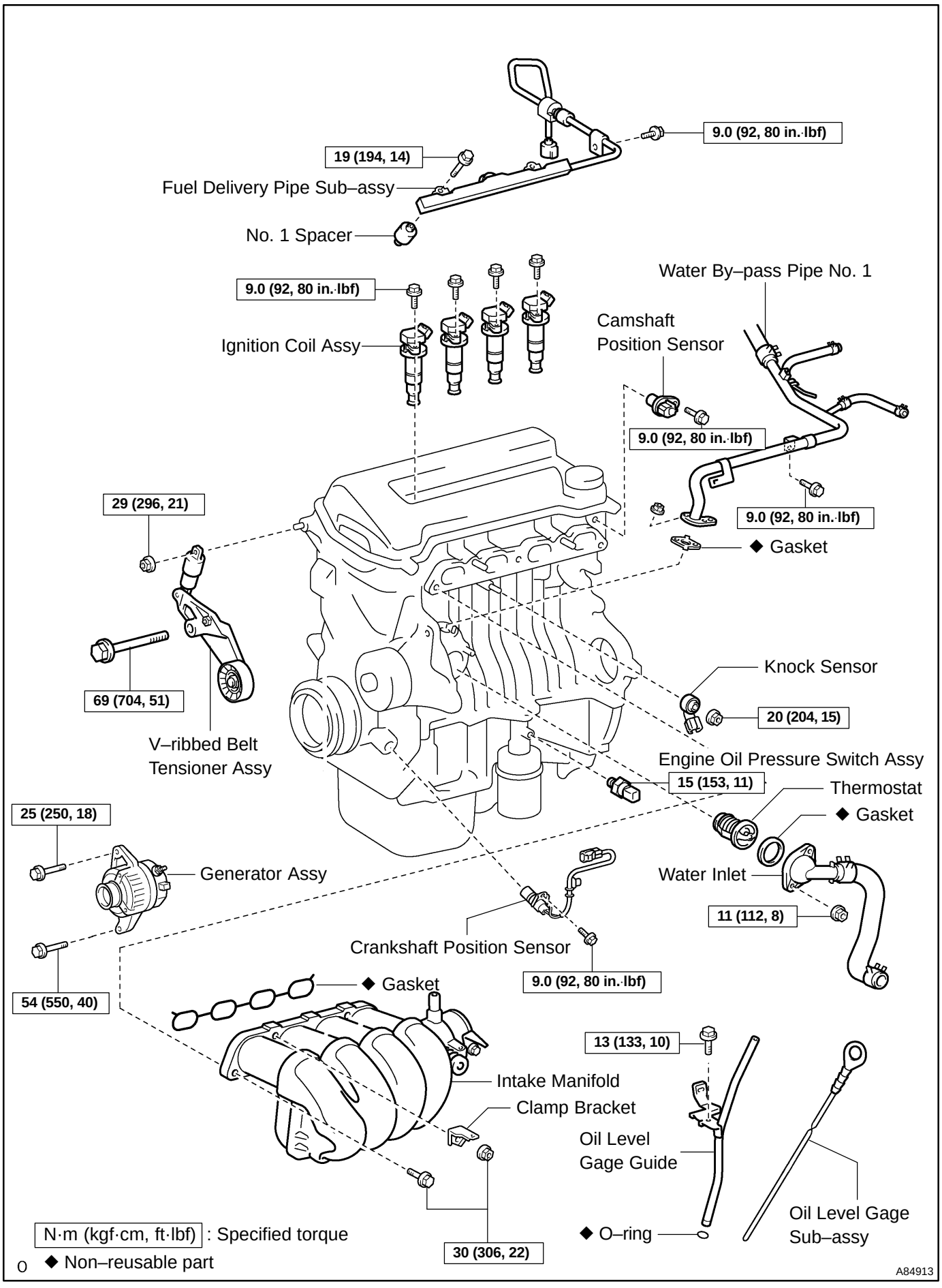
9.0 (92, 80 in.·lbf)
19 (194, 14)
Fuel Delivery Pipe Sub–assy
No. 1 Spacer
9.0 (92, 80 in.·lbf)
Ignition Coil Assy
Water By–pass Pipe No. 1
Camshaft
Position Sensor
9.0 (92, 80 in.·lbf)
9.0 (92, 80 in.·lbf)
◆ Gasket
29 (296, 21)
69 (704, 51)
V–ribbed Belt
Tensioner Assy
Knock Sensor
20 (204, 15)
Engine Oil Pressure Switch Assy
15 (153, 11)
Thermostat
◆ Gasket
25 (250, 18)
Generator Assy
Water Inlet
11 (112, 8)
Crankshaft Position Sensor
9.0 (92, 80 in.·lbf)
54 (550, 40)
◆ Gasket
13 (133, 10)
Intake Manifold
Clamp Bracket
Oil Level
Gage Guide
Oil Level Gage
Sub–assy
◆ O–ring
30 (306, 22)
N·m (kgf·cm, ft·lbf) : Specified torque
◆ Non–reusable part
A84913

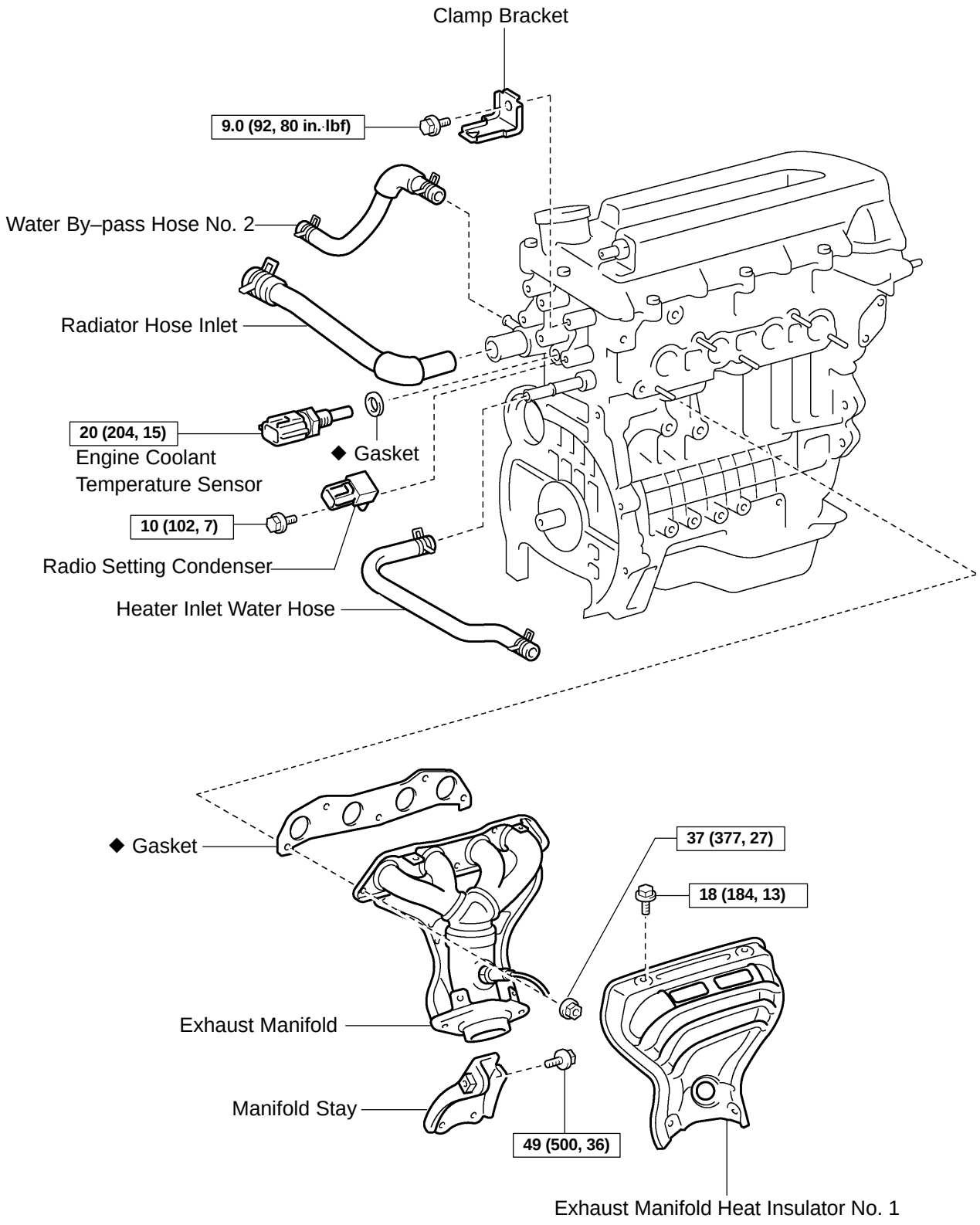

N·m (kgf·cm, ft·lbf) : Specified torque

◆ Non–reusable part

A64041

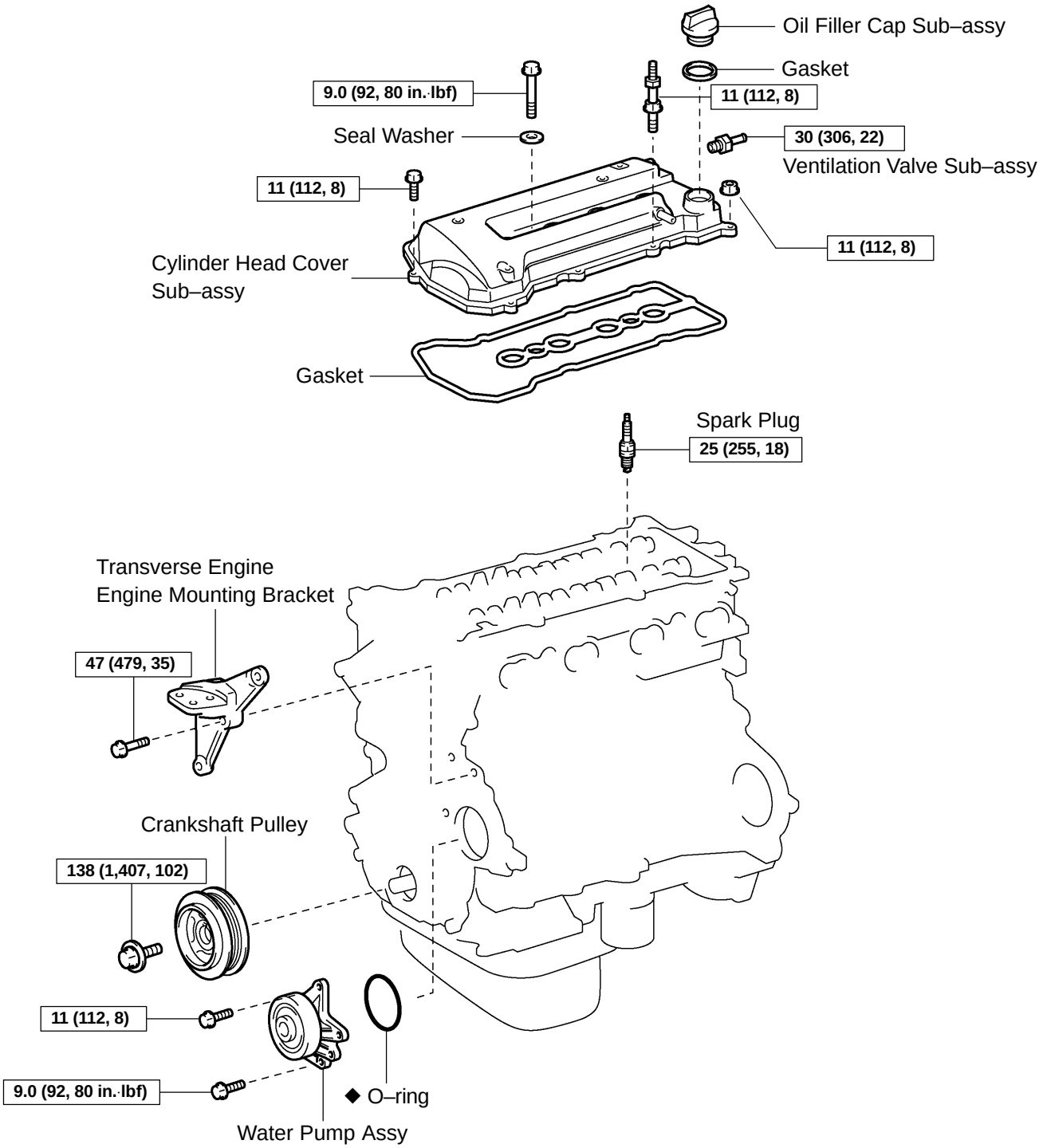

N·m (kgf·cm, ft·lbf) : Specified torque

◆ Non–reusable part

A64054

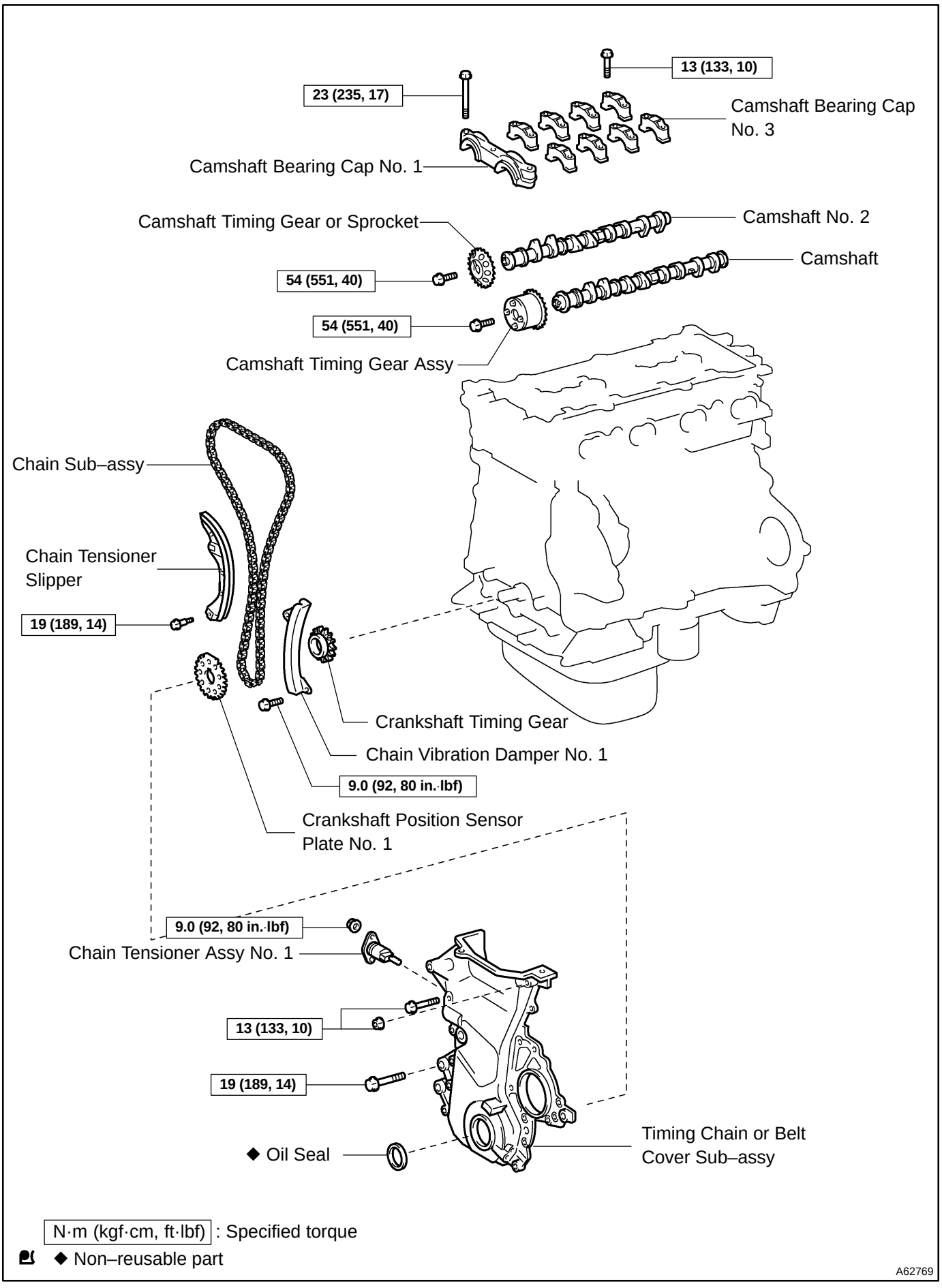
13 (133, 10)
23 (235, 17)
Camshaft Bearing Cap No. 3
Camshaft Bearing Cap No. 1
Camshaft Timing Gear or Sprocket
Camshaft No. 2
Camshaft
54 (551, 40)
54 (551, 40)
Camshaft Timing Gear Assy
Chain Sub–assy
Chain Tensioner Slipper
19 (189, 14)
Crankshaft Timing Gear
Chain Vibration Damper No. 1
9.0 (92, 80 in.·lbf)
Crankshaft Position Sensor Plate No. 1
9.0 (92, 80 in.·lbf)
Chain Tensioner Assy No. 1
13 (133, 10)
19 (189, 14)
◆ Oil Seal
Timing Chain or Belt Cover Sub–assy
N·m (kgf·cm, ft·lbf) : Specified torque
◆ Non–reusable part
A62769

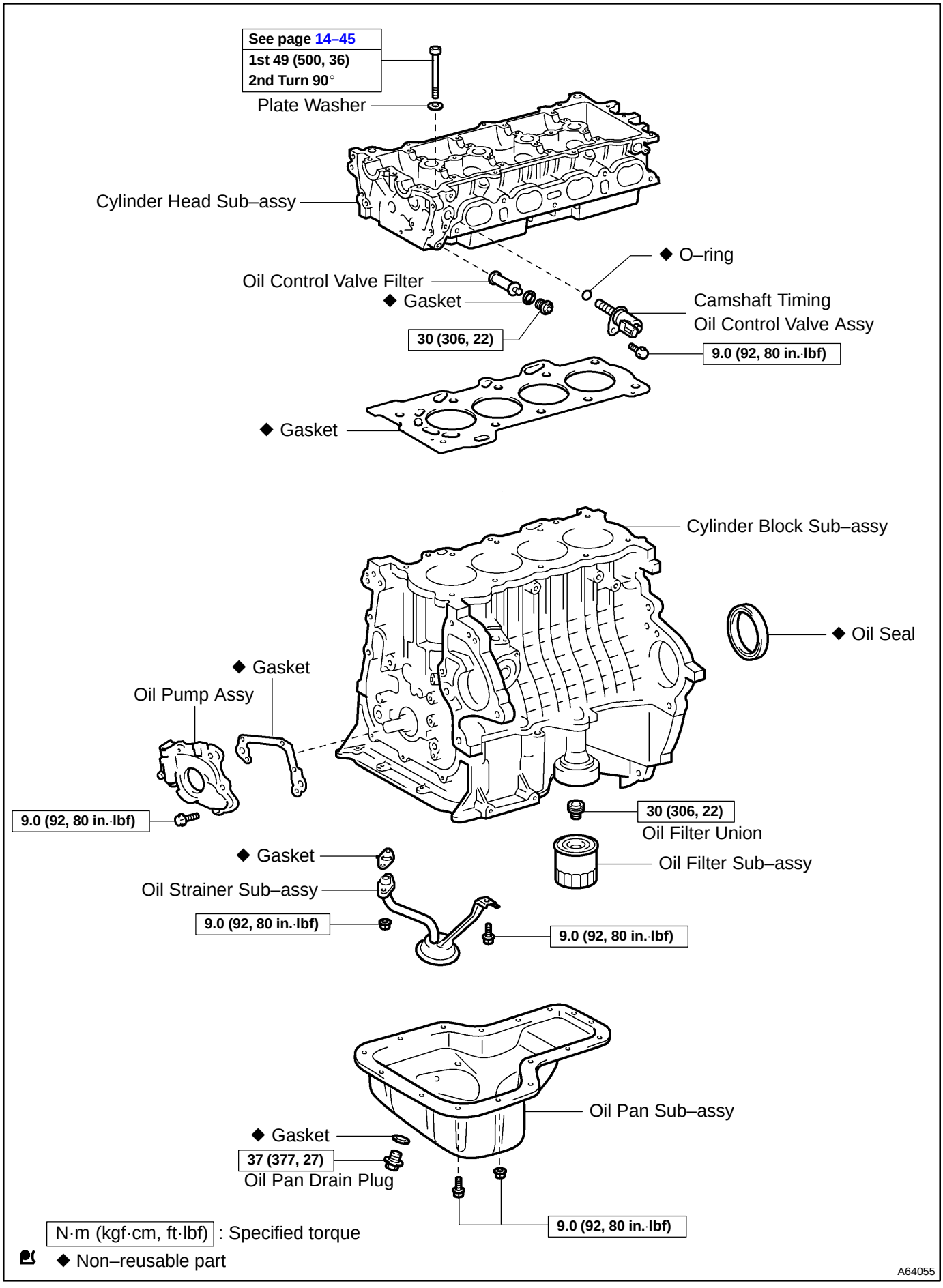
See page 14–45
1st 49 (500, 36)
2nd Turn 90°
Plate Washer
Cylinder Head Sub–assy
◆ O–ring
Oil Control Valve Filter
◆ Gasket
Camshaft Timing
Oil Control Valve Assy
30 (306, 22)
9.0 (92, 80 in.·lbf)
◆ Gasket
Cylinder Block Sub–assy
◆ Oil Seal
◆ Gasket
Oil Pump Assy
9.0 (92, 80 in.·lbf)
30 (306, 22)
Oil Filter Union
◆ Gasket
Oil Filter Sub–assy
Oil Strainer Sub–assy
9.0 (92, 80 in.·lbf)
9.0 (92, 80 in.·lbf)
Oil Pan Sub–assy
◆ Gasket
37 (377, 27)
Oil Pan Drain Plug
9.0 (92, 80 in.·lbf)
N·m (kgf·cm, ft·lbf) : Specified torque
◆ Non–reusable part
A64055

OVERHAUL

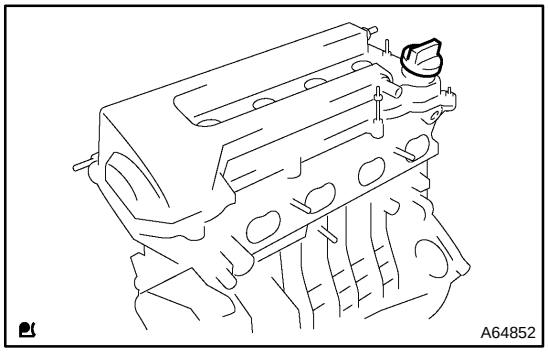

1. REMOVE OIL FILLER CAP SUB–ASSY

(a) Remove the oil filler cap from the cylinder head cover.

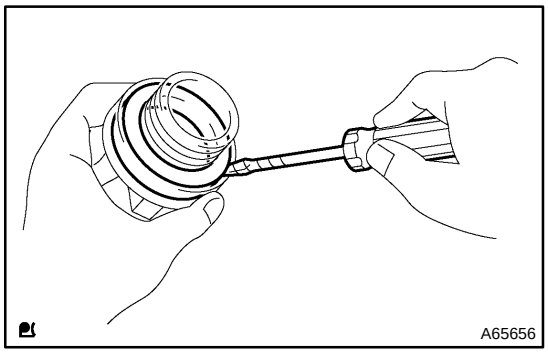

2. REMOVE OIL FILLER CAP GASKET

(a) Using a screwdriver, remove the gasket from the oil filler cap.

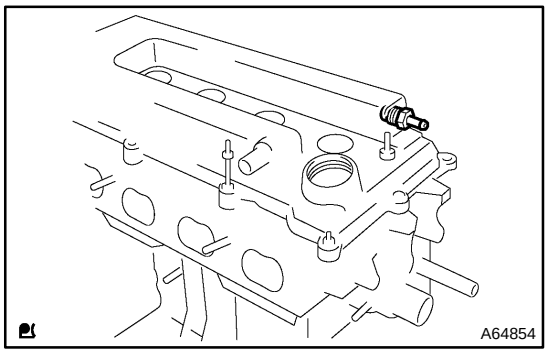

3. REMOVE VENTILATION VALVE SUB–ASSY

(a) Remove the ventilation valve from the cylinder head cover.

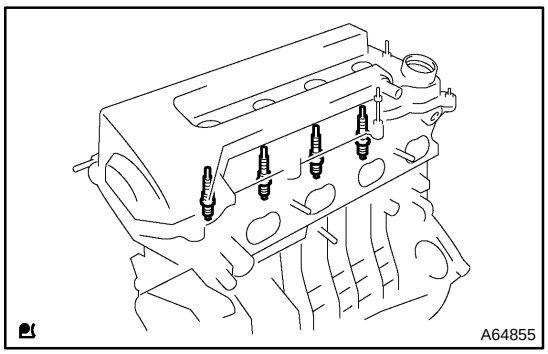

4. REMOVE SPARK PLUG

(a) Using a spark plug wrench, remove the spark plugs.

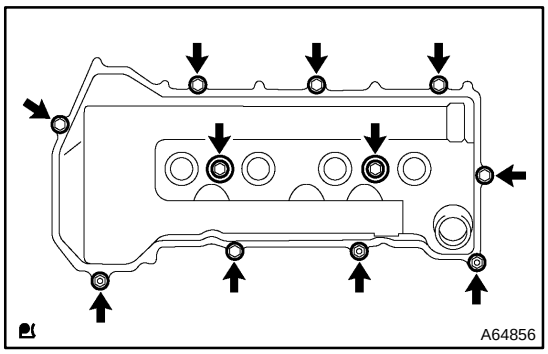

5. REMOVE CYLINDER HEAD COVER SUB–ASSY

(a) Remove the 9 bolts, 2 seal washers, 2 nuts and cylinder head cover.

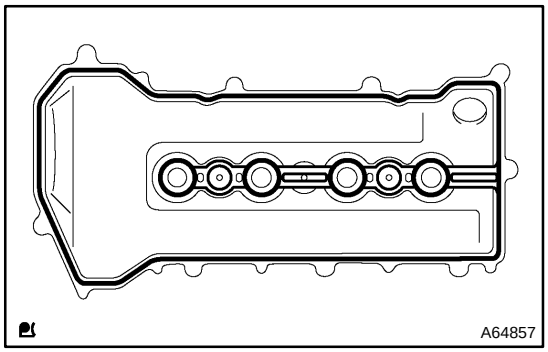

6. REMOVE CYLINDER HEAD COVER GASKET

(a) Remove the gasket from the cylinder head cover.

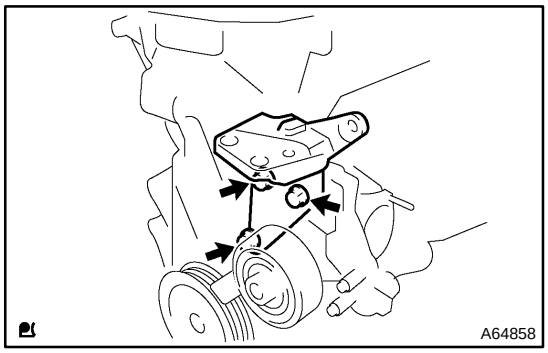

7. REMOVE TRANSVERSE ENGINE ENGINE MOUNTING BRACKET

(a) Remove the 3 bolts and transverse engine engine mounting bracket.

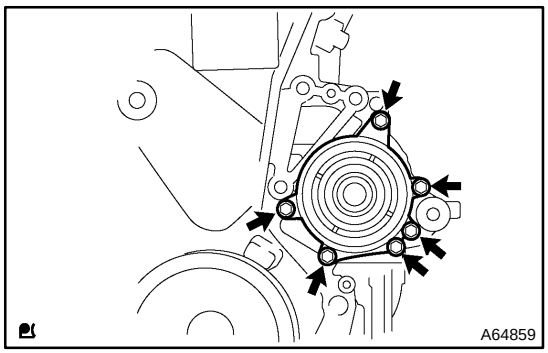

8. REMOVE WATER PUMP ASSY

(a) Remove the 6 bolts and water pump.

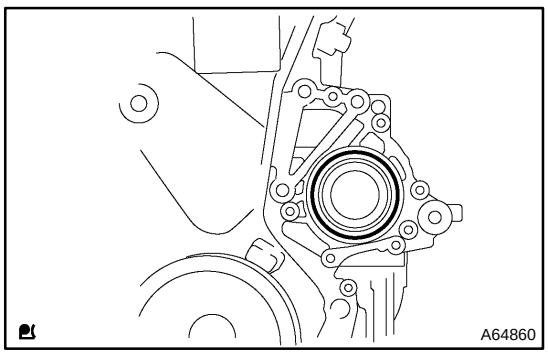

9. REMOVE WATER PUMP O–RING

(a) Remove an O–ring from the timing chain cover.

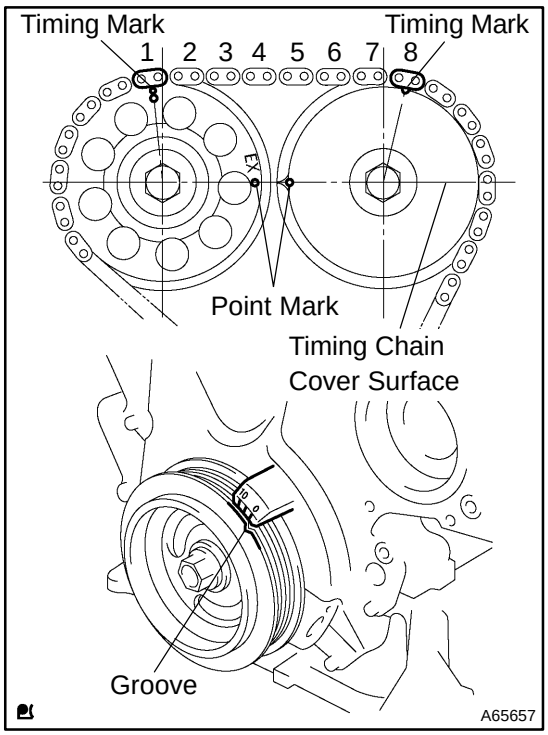

10. REMOVE CRANKSHAFT PULLEY

(a) Set the No. 1 cylinder to the TDC/compression.
  (1) Turn the crankshaft pulley, and align its groove with timing mark ”0” of the timing chain cover.
  (2) Check that the point marks of the camshaft timing gears are in straight line on the timing chain cover surface as shown in the illustration.

HINT:
If not, turn the crankshaft 1 revolution (360°) and align the marks as above.

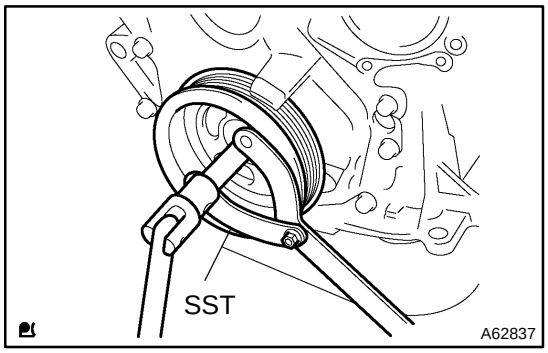

(b) Using SST, remove the crankshaft pulley bolt.
  SST 09960–10010 (09962–01000, 09963–01000)
(c) Remove the crankshaft pulley from the crankshaft.

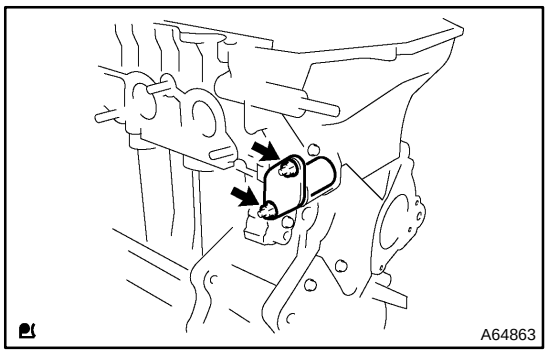

11. REMOVE CHAIN TENSIONER ASSY NO.1

(a) Remove the 2 nuts and chain tensioner.

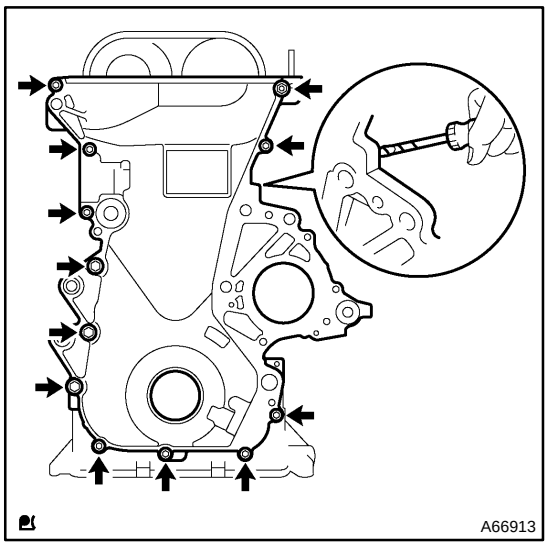

12. REMOVE TIMING CHAIN OR BELT COVER SUB–ASSY

(a) Remove the 11 bolts and nut.

(b) Remove the timing chain cover by prying the portions between the timing chain cover and cylinder head and cylinder block with a screwdriver.

NOTICE:

Be careful not to damage the contact surfaces of the timing chain cover, cylinder head and cylinder block.

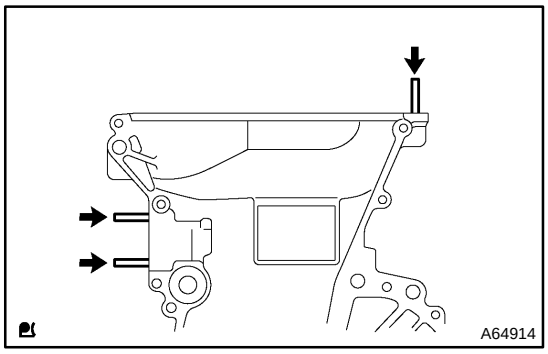

(c) Using a torx socket wrench E5, remove the 3 stud bolts.

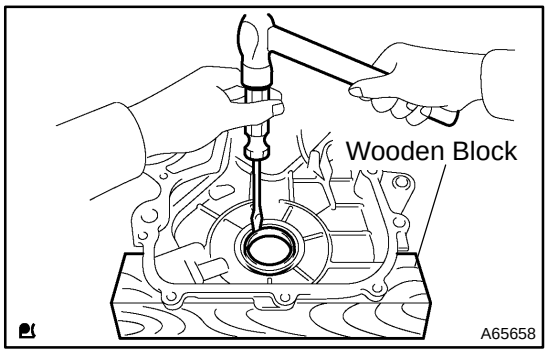

13. REMOVE TIMING CHAIN OR BELT COVER OIL SEAL

(a) Place the timing chain cover on wooden blocks.

(b) Using a screwdriver, remove the oil seal.

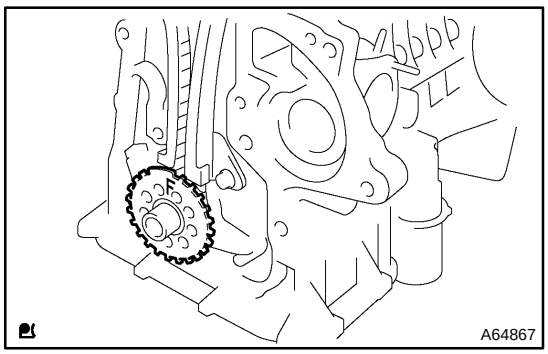

14. REMOVE CRANKSHAFT POSITION SENSOR PLATE NO.1

(a) Remove the crankshaft position sensor plate from the crankshaft.

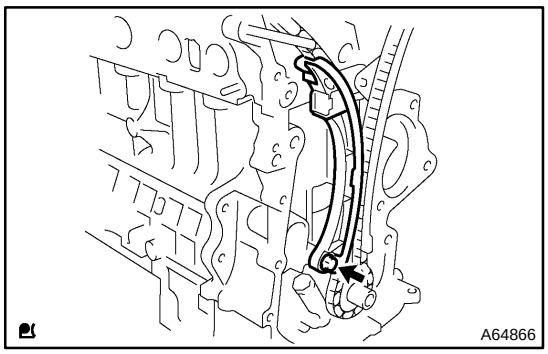

15. REMOVE CHAIN TENSIONER SLIPPER

(a) Remove the bolt and chain tensioner slipper.

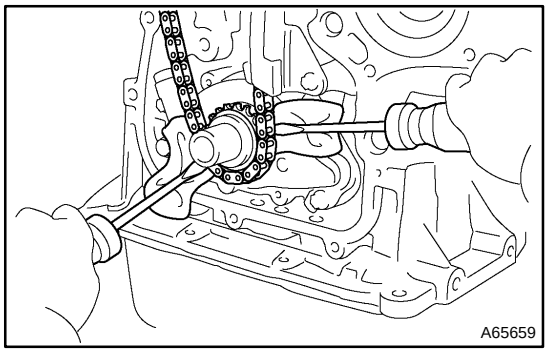

16. REMOVE CHAIN SUB–ASSY

(a) Using the 2 screwdrivers, pry out the chain with the crankshaft timing gear as shown in the illustration.

NOTICE:

- **Put shop rag to protect the engine.**
- **In case of revolving the camshafts with the chain off the gears, turn the crankshaft 1/4 revolution for valves not to touch the pistons.**

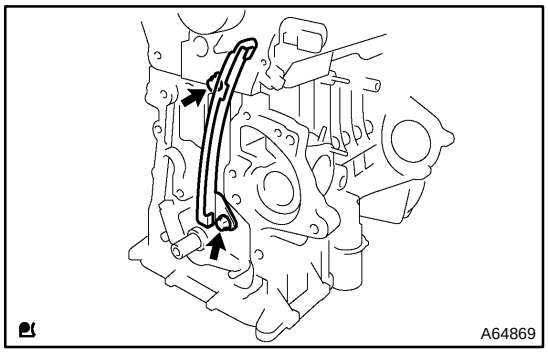

17. REMOVE CHAIN VIBRATION DAMPER NO.1

(a) Remove the 2 bolts and chain vibration damper.

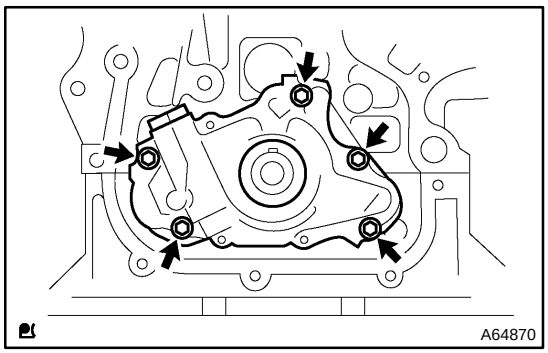

18. REMOVE OIL PUMP ASSY

(a) Remove the 5 bolts and oil pump.

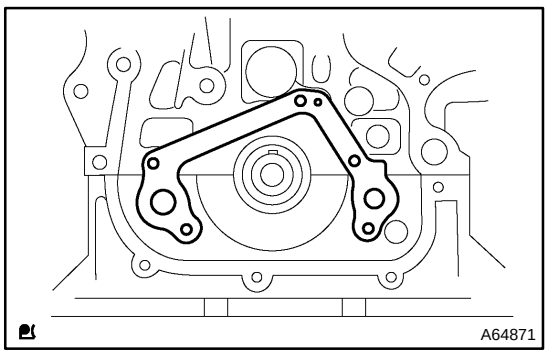

19. REMOVE OIL PUMP GASKET

(a) Remove the gasket from the cylinder block.

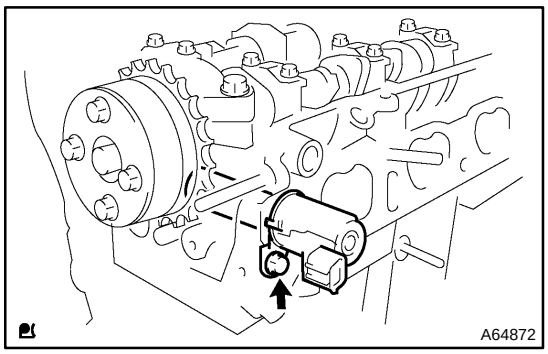

20. REMOVE CAMSHAFT TIMING OIL CONTROL VALVE ASSY

(a) Remove the bolt and camshaft timing oil control valve.

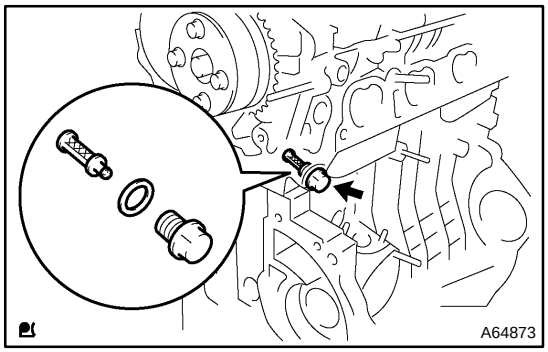

21. REMOVE OIL CONTROL VALVE FILTER

(a) Remove the bolt with gasket and oil control valve filter.

(b) Remove the gasket and oil control valve filter from the bolt.

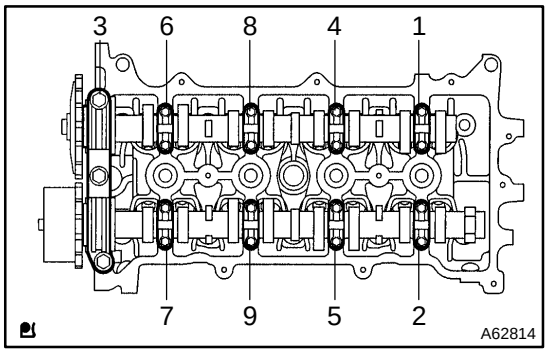

22. REMOVE CAMSHAFT

(a) Using several steps, uniformly loosen and remove the 19 bolts in the sequence shown, then remove the 9 bearing caps.

(b) Remove the 2 camshafts from the cylinder head.

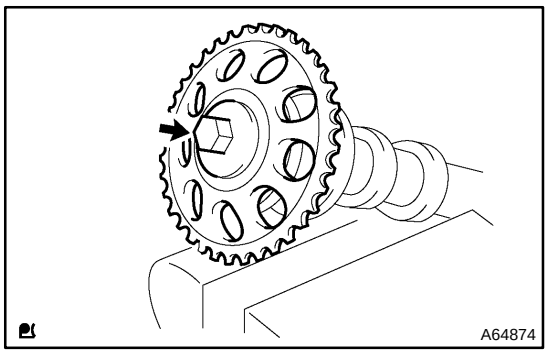

23. REMOVE CAMSHAFT TIMING GEAR OR SPROCKET

(a) Grip the camshaft with a vice, and remove the bolt and camshaft timing gear.

NOTICE:

Be careful not to damage the camshaft.

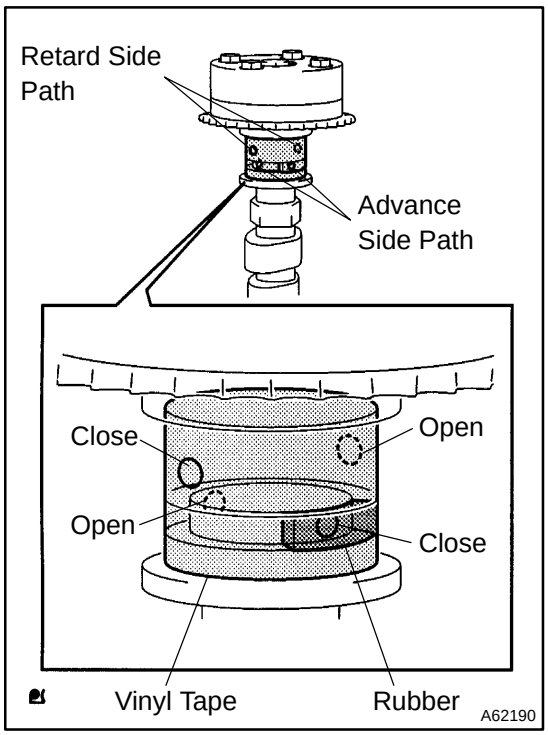

24. INSPECT CAMSHAFT TIMING GEAR ASSY

(a) Check the lock of camshaft timing gear.

(1) Clamp the camshaft in a vise, and confirm the camshaft timing gear is locked.

NOTICE:

Be careful not to damage the camshaft.

(b) Release the lock pin.

(1) Cover the 4 oil paths of the cam journal with vinyl tape as shown in the illustration.

HINT:

Two advance side paths are provided in the groove of the camshaft. Plug one of the path with a rubber piece.

(2) Break through the tapes of the advance side path and retard side path on the opposite side of the groove.

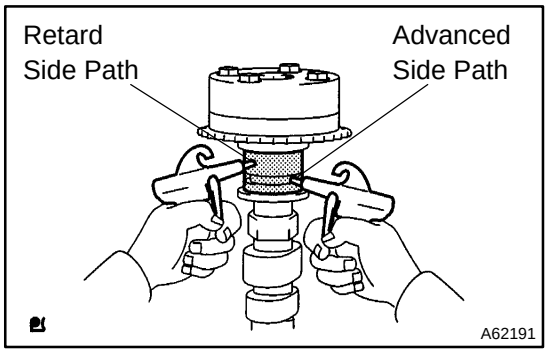

(3) Put air pressure into two broken paths (the advance side path and retard side path) with about 150 kPa {1.5 kgf·cm^2}.

CAUTION:

Cover the paths with shop rag to avoid oil splashing.

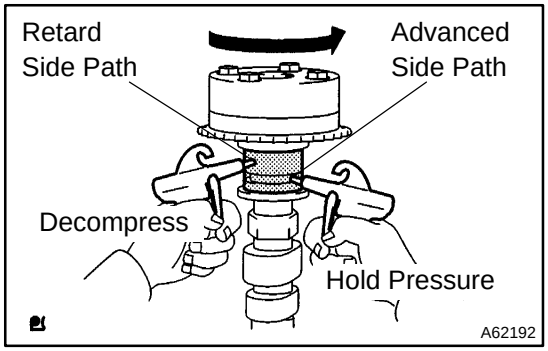

(4) Confirm if the camshaft timing gear assembly revolves to the timing advance direction when weakening the air pressure of the timing retard path.

HINT:

The lock pin is released, and camshaft timing gear revolves to the advance direction.

(5) When the camshaft timing gear comes to the most advanced position, take out the air pressure of the timing retard side path, then take out that of the timing advance side path.

CAUTION:

The camshaft timing assembly gear occasionally shifts to the retard side abruptly, if the air compression of the advanced side path is released before the retard side path. It often causes the breakage of the lock pin.

(c) Check smooth revolution.
(1) Revolve the camshaft timing gear assembly within the movable range except for the most retarded position several times, and check that it revolves smoothly.

CAUTION:
Be sure to perform this check by hand, instead of air pressure.

(d) Check the lock in the most retarded position.
(1) Confirm that the camshaft timing gear assembly is locked at the most retarded position.

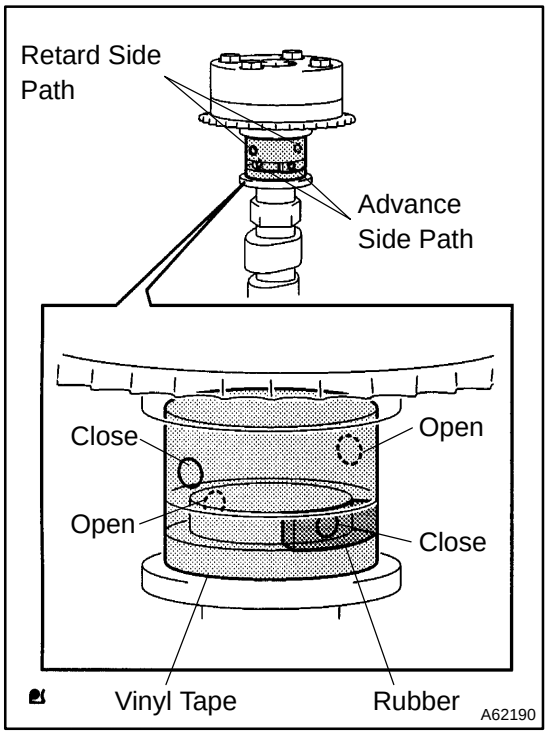

25. REMOVE CAMSHAFT TIMING GEAR ASSY

(a) Clamp the camshaft in a vise, and confirm that the gear is locked.

CAUTION:
Be careful not to damage the camshaft.

(b) Cover the 4 oil paths of the cam journal with vinyl tape as shown in the illustration.

HINT:
Two advance side paths are provided in the groove of the camshaft. Plug one of the path with a rubber piece.

(c) Break through the tapes of the advance side path and retard side path on the opposite side of the groove.

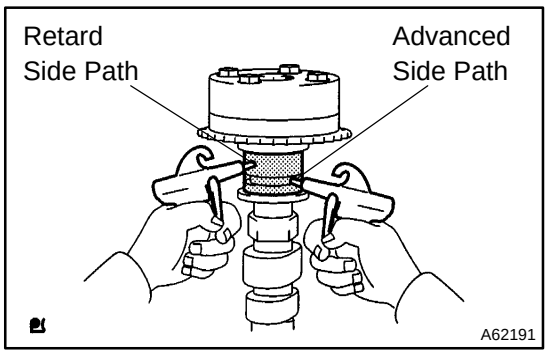

(d) Put air pressure into two broken paths (the advance side path and retard side path) with about 150 kPa {1.5 kgf/cm^2}.

CAUTION:
Cover the paths with shop rag to avoid oil splashing.

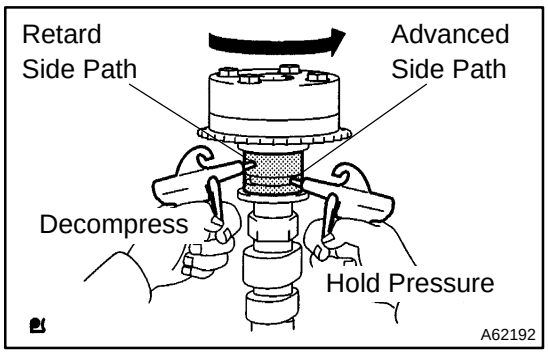

(e) Confirm if the camshaft timing gear assembly revolves to the timing advance direction when weakening the air pressure of the timing retard path.

HINT:

The lock pin is released, and camshaft timing gear revolves to the advance direction.

(f) When the camshaft timing gear comes to the most advanced position, take out the air pressure of the timing retard side path, then take out that of timing advance side path.

CAUTION:

Camshaft timing gear assembly occasionally shifts to the retard side abruptly, if the air compression of the advanced side path is released before the retard side path. It often causes the breakage of the lock pin.

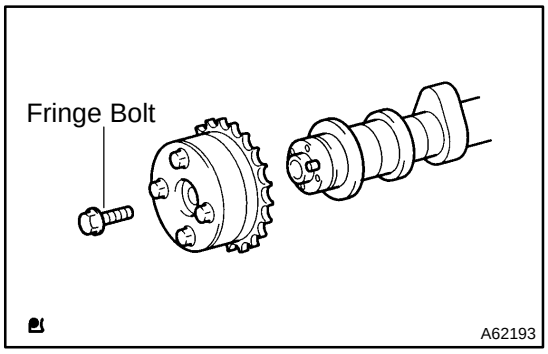

(g) Remove the fringe bolt and camshaft timing gear.

NOTICE:

- **Be sure not to remove the other 4 bolts.**
- **In case of reusing the camshaft timing gear, release the straight pin locking first, then install the gear.**

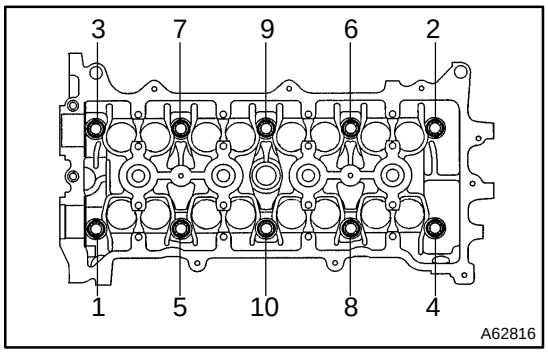

26. REMOVE CYLINDER HEAD SUB–ASSY

(a) Using a bi–hexagon wrench 10, uniformly loosen and remove the 10 cylinder head bolts, in several passes, in the sequence shown, then remove the 10 cylinder head bolts and 10 plate washers.

NOTICE:

- **Be careful not to drop plate washers into the cylinder head.**
- **Head warpage or cracking could result from removing bolts in an incorrect order.**

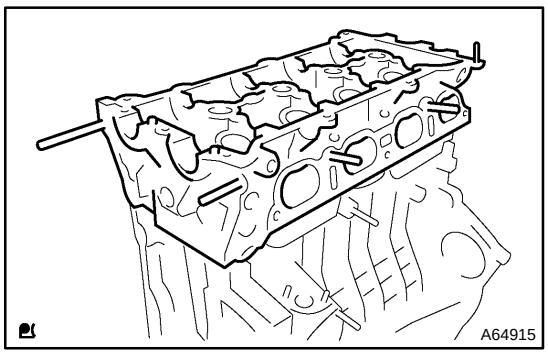

(b) Remove the cylinder head from the cylinder block.

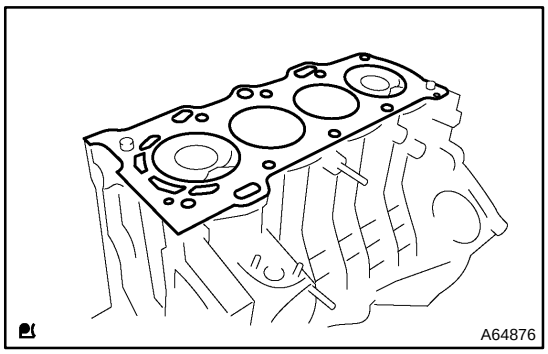

27. REMOVE CYLINDER HEAD GASKET

(a) Remove the cylinder head gasket from the cylinder block.

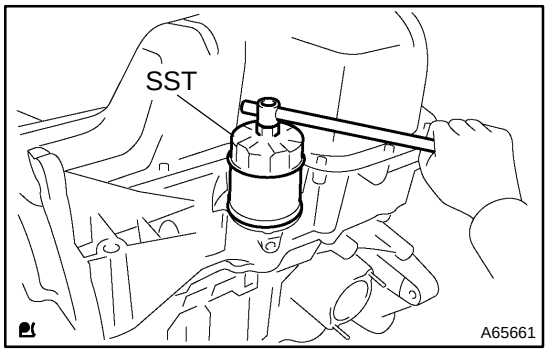

28. REMOVE OIL FILTER SUB–ASSY

(a) Using SST, remove the oil filter.
SST 09228–06501

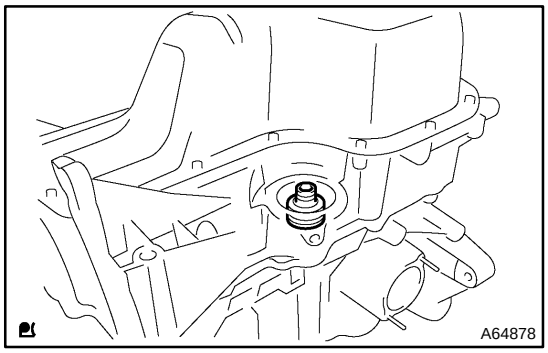

29. REMOVE OIL FILTER UNION

(a) Using a socket hexagon wrench 12, remove the oil filter union.

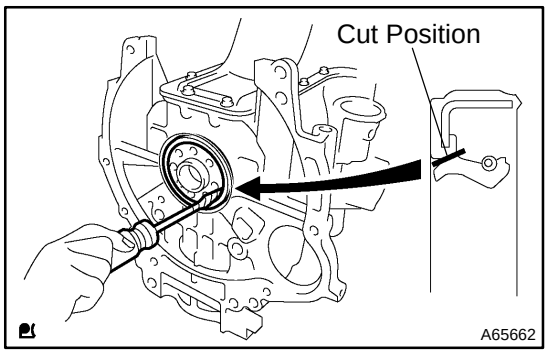

30. REMOVE ENGINE REAR OIL SEAL

(a) Using a knife, cut off the oil seal lip.

(b) Using a screwdriver with the tip wrapped in tape, pry out the oil seal.

NOTICE:

After the removal, check if the crankshaft is not damaged. If damaged, smooth it with a 400–grid sandpaper.

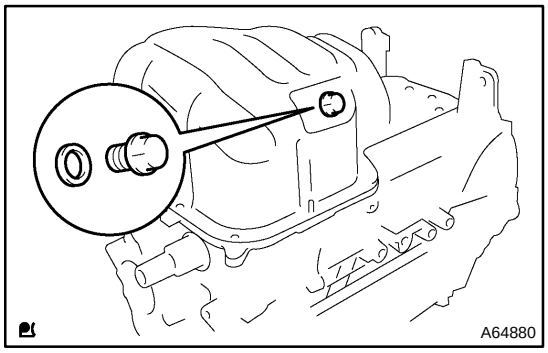

31. REMOVE OIL PAN DRAIN PLUG

(a) Remove the oil pan drain plug and gasket from the oil pan.

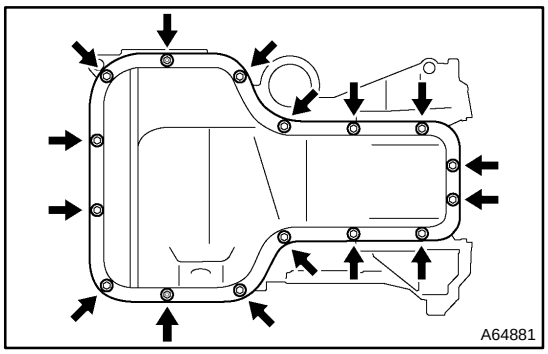

32. REMOVE OIL PAN SUB–ASSY

(a) Remove the 14 bolts and 2 nuts.

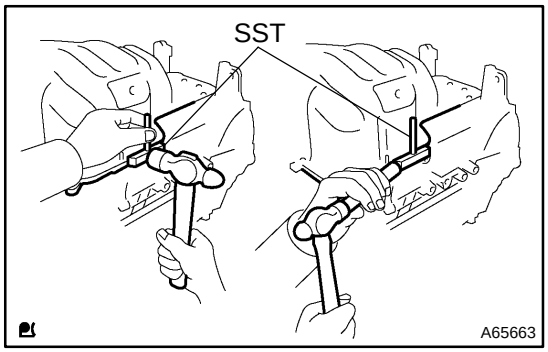

(b) Insert the blade of SST between the bearing cap and oil pan, then cut off the applied sealer and remove the oil pan.

SST 09032–00100

NOTICE:

Be careful not to damage the oil pan contact surface of the bearing cap and oil pan.

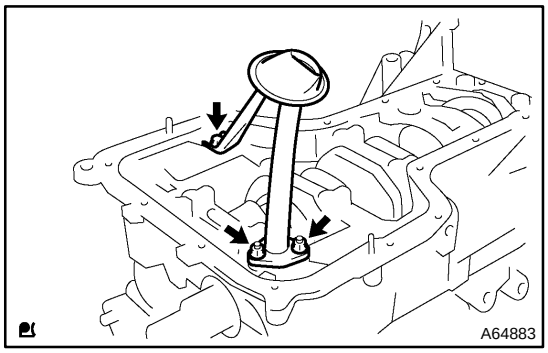

33. REMOVE OIL STRAINER SUB–ASSY

(a) Remove the bolt, 2 nuts and oil strainer.

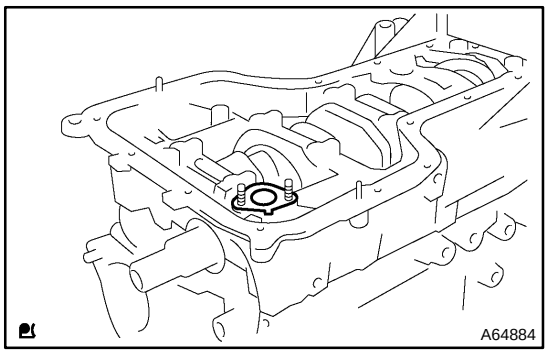

34. REMOVE OIL STRAINER FLANGE GASKET

(a) Remove the gasket from the bearing cap.

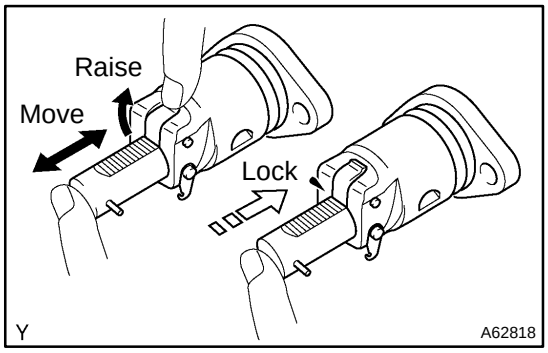

35. INSPECT CHAIN TENSIONER ASSY NO.1

(a) Check that the plunger moves smoothly when the ratchet pawl is raised with your finger.

(b) Release the ratchet pawl and check that the plunger is locked in place by the ratchet pawl and does not move when pushed with your finger.

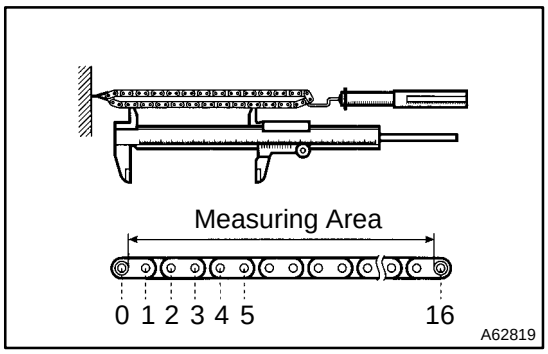

36. INSPECT CHAIN SUB–ASSY

(a) Using a spring tension gauge and vernier caliper, pull the timing chain with 140 N (14.3 kgf, 31.5 lb) and measure the length of it.

Maximum chain elongation: 122.6 mm (4.827 in.)

If the chain elongation is greater than maximum, replace the chain.

HINT:

Make the same measurements pulling at 3 or more places selected at random.

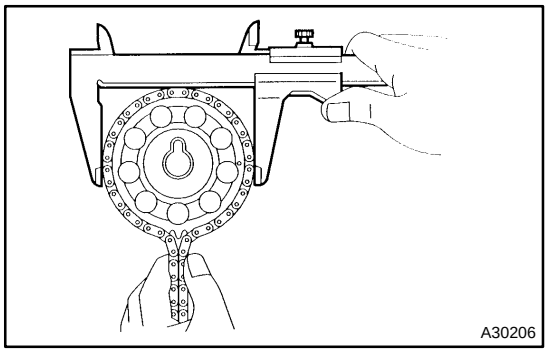

37. INSPECT CAMSHAFT TIMING GEAR OR SPROCKET

(a) Wrap the chain around the camshaft timing gear.

(b) Using a vernier caliper, measure the camshaft timing gear diameter with the chain.

Minimum gear diameter (w/ chain): 97.3 mm (3.831 in.)

NOTICE:

The vernier caliper must contact the chain rollers for measuring.

If the gear diameter is less than minimum, replace the chain and camshaft timing gear.

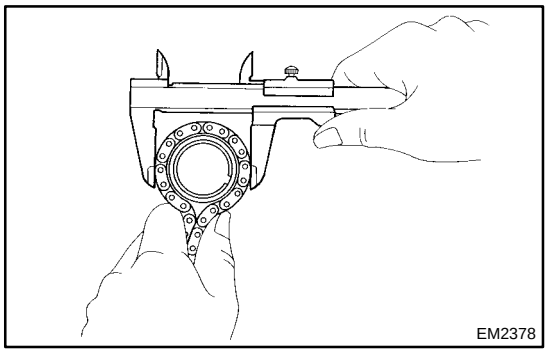

38. INSPECT CRANKSHAFT TIMING GEAR OR SPROCKET

(a) Wrap the chain around the crankshaft timing gear.

(b) Using a vernier caliper, measure the crankshaft timing gear diameter with the chain.

Minimum gear diameter (w/ chain): 51.6 mm (2.032 in.)

NOTICE:

The vernier caliper must contact the chain rollers for measuring.

If the gear diameter is less than minimum, replace the chain and crankshaft timing gear.

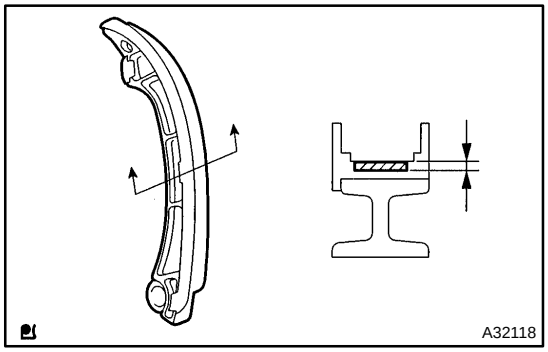

39. INSPECT CHAIN TENSIONER SLIPPER

(a) Using a vernier caliper, measure the chain tensioner slipper wears.

Maximum wear: 1.0 mm (0.039 in.)

If the wear is greater than maximum, replace the chain tensioner slipper.

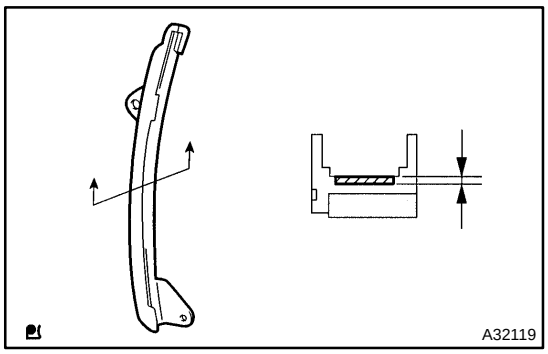

40. INSPECT CHAIN VIBRATION DAMPER NO.1

(a) Using a vernier caliper, measure the vibration damper wears.

Maximum wear: 1.0 mm (0.039 in.)

If the wear is greater than maximum, replace the chain vibration damper.

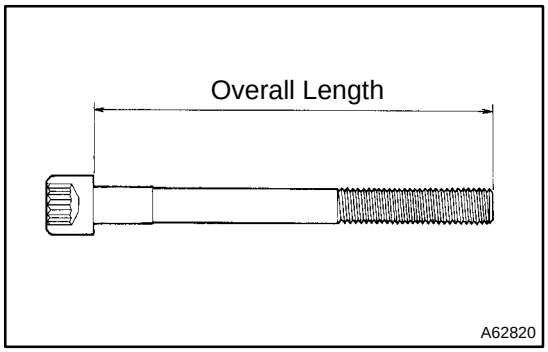

41. INSPECT CYLINDER HEAD SET BOLT

(a) Using a vernier caliper, measure the length of cylinder head bolts from the seat to the end.

Standard bolt length:
146.8 to 148.2 mm (5.780 to 5.835 in.)
Maximum bolt length: 148.5 mm (5.846 in.)

If the bolt length is greater than maximum, replace the cylinder head set bolt.

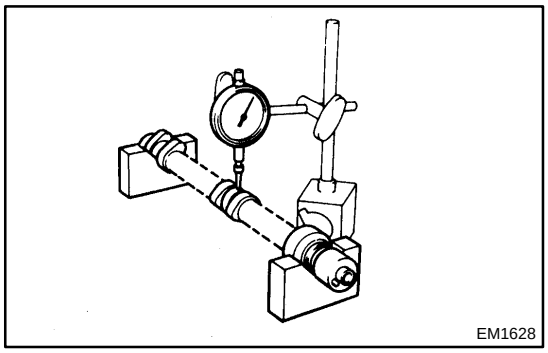

42. INSPECT CAMSHAFT

(a) Inspect the camshaft for runout.
  (1) Place the camshaft on V–blocks.
  (2) Using a dial indicator, measure the circle runout at the center journal.

Maximum circle runout: 0.03 mm (0.0012 in.)

If the circle runout is greater than maximum, replace the camshaft.

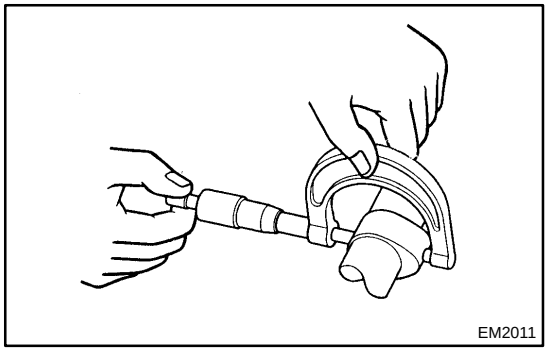

(b) Inspect the cam lobes.
  (1) Using a micrometer, measure the cam lobe height.

Standard cam lobe height:
44.333 to 44.433 mm (1.7454 to 1.7493 in.) for intake
43.761 to 43.861 mm (1.7229 to 1.7268 in.) for exhaust
Minimum cam lobe height:
44.18 mm (1.7394 in.) for intake
43.61 mm (1.7169 in.) for exhaust

If the cam lobe height is less than minimum, replace the camshaft.

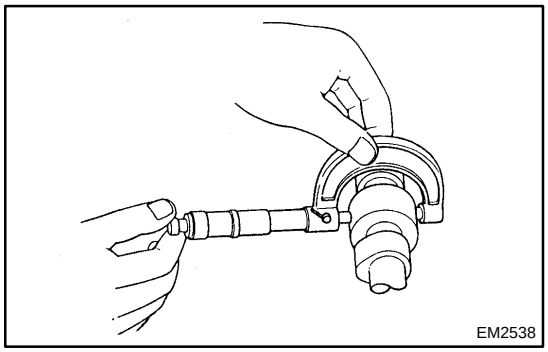

(c) Inspect the camshaft journals.
  (1) Using a micrometer, measure the journal diameter.

No. 1 journal diameter:
34.449 to 34.465 mm (1.3563 to 1.3569 in.)
Others journal diameter:
22.949 to 22.965 mm (0.9035 to 0.9041 in.)

If the journal diameter is not as specified, check the oil clearance.

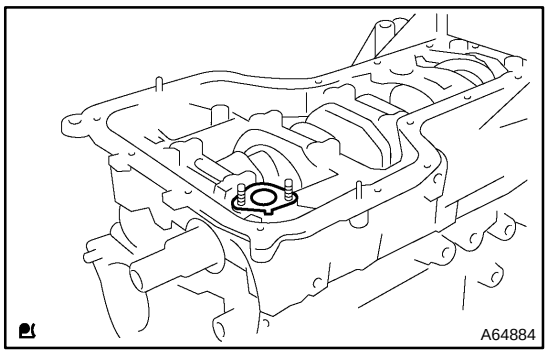

43. INSTALL OIL STRAINER FLANGE GASKET

(a) Install a new gasket to the bearing cap.

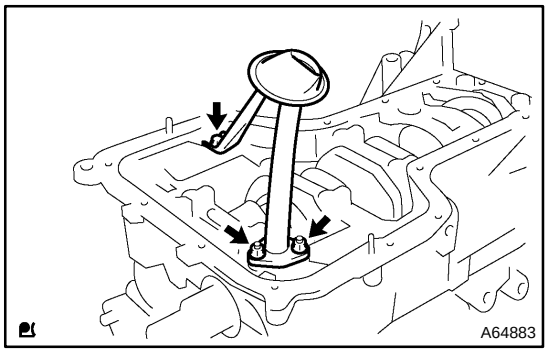

44. INSTALL OIL STRAINER SUB–ASSY

(a) Install the oil strainer with the 2 nuts and bolt.
Torque: 9.0 N·m (92 kgf·cm, 80 in.·lbf)

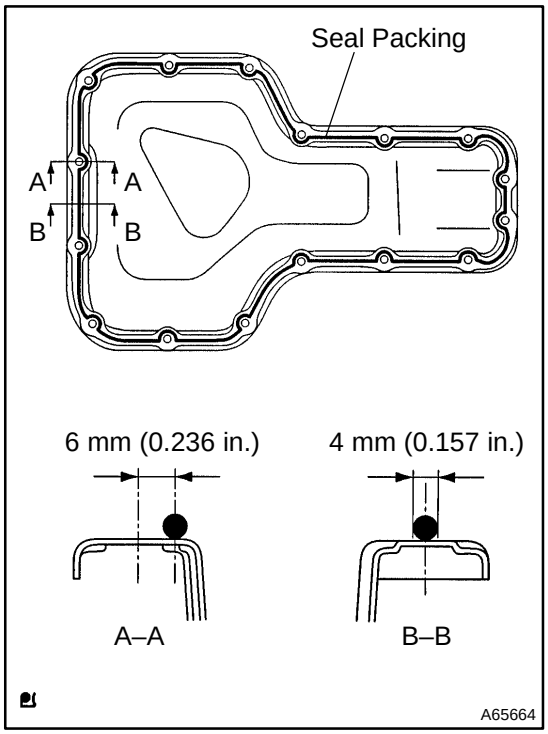

45. INSTALL OIL PAN SUB–ASSY

(a) Remove any old packing material from the contact surface and thread holes.

(b) Apply the seal packing in the shape of the bead (Diameter 3.5 mm to 4.5 mm (0.138 to 0.177 in.)) consequently as shown in the illustration.
Seal packing: Part No. 08826–00080 or equivalent

NOTICE:

- **Remove any oil from the contact surface.**
- **Install the oil pan within 3 minutes after applying the seal packing.**
- **Do not put into engine oil within 2 hours of installation.**

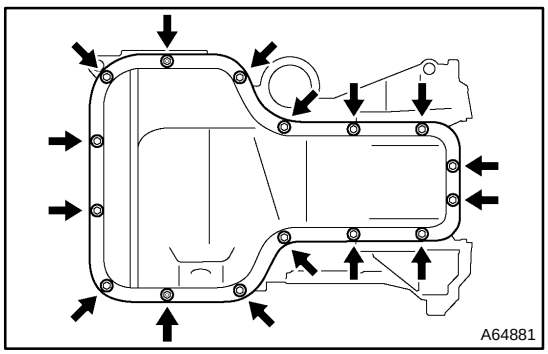

(c) Install the oil pan with the 14 bolts and 2 nuts.
Torque: 9.0 N·m (92 kgf·cm, 80 in.·lbf)

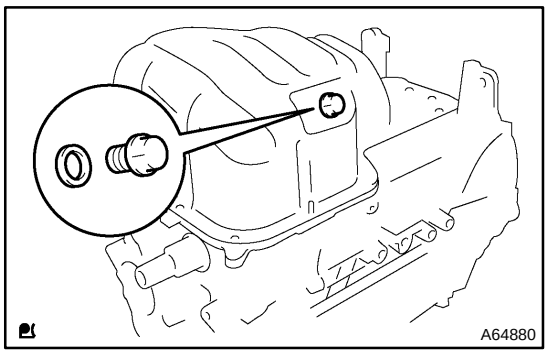

46. INSTALL OIL PAN DRAIN PLUG

(a) Place a new gasket on the oil pan drain plug, and install it.

Torque: 37 N·m (377 kgf·cm, 27 ft·lbf)

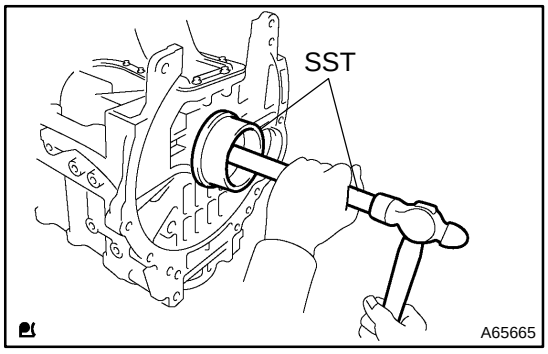

47. INSTALL ENGINE REAR OIL SEAL

(a) Apply a light coat of multi–purpose grease to a new oil seal lip.

NOTICE:

Keep the lip off foreign materials.

(b) Using SST, tap in the oil seal until its surface is flush with the oil seal retainer edge.

SST 09223–15020, 09950–70010 (09951–07100)

NOTICE:

Wipe off extra grease on the crankshaft.

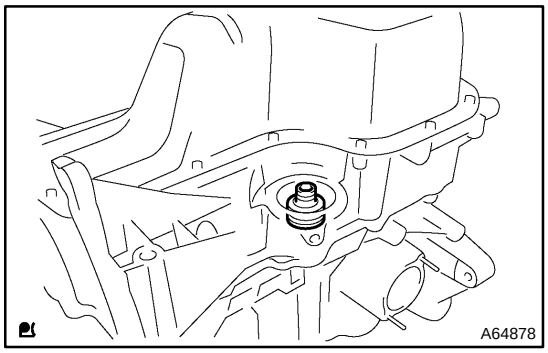

48. INSTALL OIL FILTER UNION

(a) Using a socket hexagon wrench 12, install the oil filter union.

Torque: 30 N·m (306 kgf·cm, 22 ft·lbf)

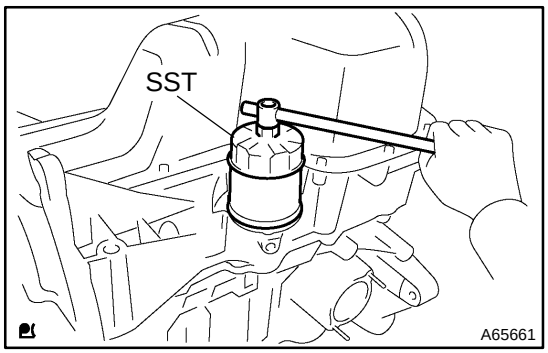

49. INSTALL OIL FILTER SUB–ASSY

(a) Check and clean the oil filter installation surface.

(b) Apply clean engine oil to the gasket of a new oil filter.

(c) Lightly screw the oil filter into place, and tighten it until the gasket contacts the seat.

(d) Using SST, tighten it an additional 3/4 turn.

SST 09228–06501

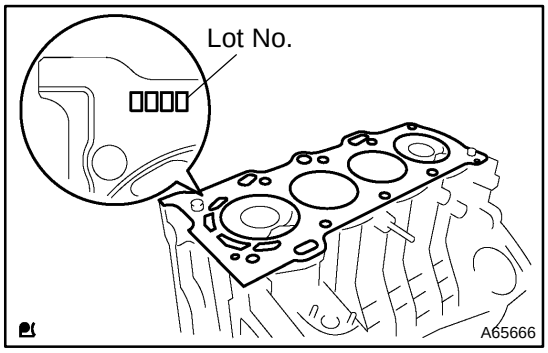

50. INSTALL CYLINDER HEAD GASKET

(a) Place a new cylinder head gasket on the cylinder block surface with the Lot No. stamp upward.

NOTICE:

- **Pay attention to the installation direction.**
- **Place the cylinder head gently in order not to damage the gasket with the bottom part of the head.**

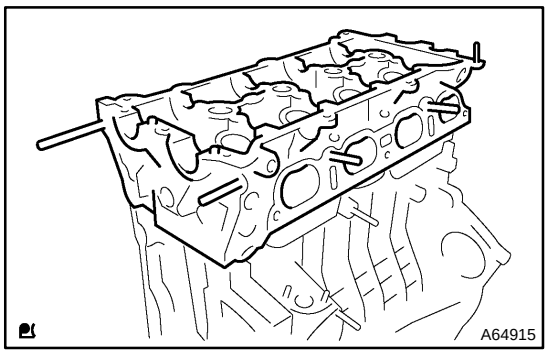

51. INSTALL CYLINDER HEAD SUB–ASSY

(a) Place the cylinder head on the cylinder block.

(b) Apply a light coat of engine oil on the threads and under the heads of the cylinder head bolts.

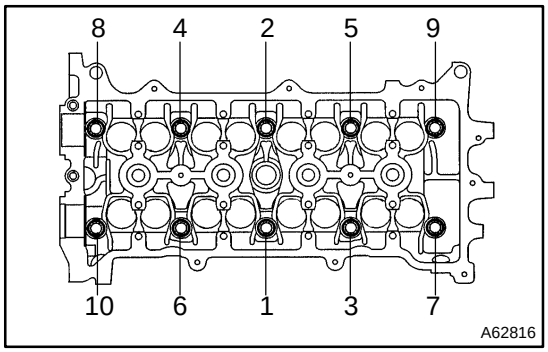

(c) Using a bi–hexagon wrench 10, install and uniformly tighten the 10 cylinder head bolts with the plate washers, in several passes, in the sequence shown.
Torque: 49 N·m (500 kgf·cm, 36 ft·lbf)

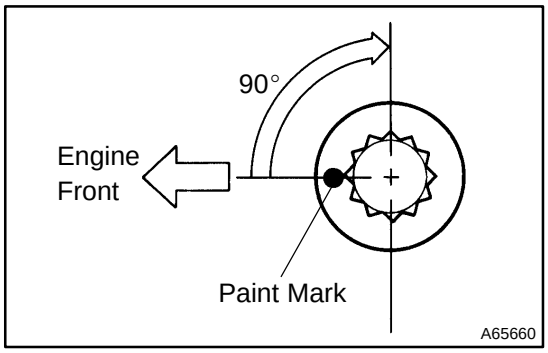

(d) Mark the front of the cylinder head bolt with paint.

(e) Retighten the cylinder head bolts 90° in the numerical order shown.

(f) Check that the point marked bolts are moved by 90° angle.

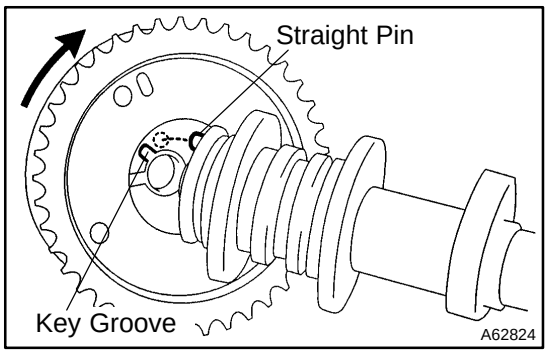

52. INSTALL CAMSHAFT TIMING GEAR ASSY

(a) Put the camshaft timing gear assembly and camshaft together with the straight pin off the key groove.

(b) Turn the camshaft timing gear assembly to the left direction (as shown in the illustration) with pushing it lightly against the camshaft. Push further at the position where the pin gets into the groove.

CAUTION:

Be sure not to turn the camshaft timing gear to the retard angle side (to the right angle).

(c) Check that there is no clearance between the gear's fringe and camshaft.

(d) Tighten the fringe bolt with the camshaft timing gear fixed.
Torque: 54 N·m (551 kgf·cm 40 ft·lbf)

(e) Check that the camshaft timing gear assembly can move to the retard angle side (the right angle), and is locked at the most retarded position.

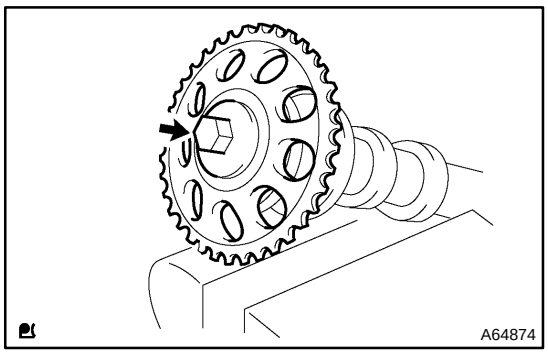

53. INSTALL CAMSHAFT TIMING GEAR OR SPROCKET

(a) Grip the camshaft with a vise, then install the camshaft timing gear with the bolt.

Torque: 54 N·m (551 kgf·cm 40 ft·lbf)

NOTICE:

Be careful not to damage the camshaft.

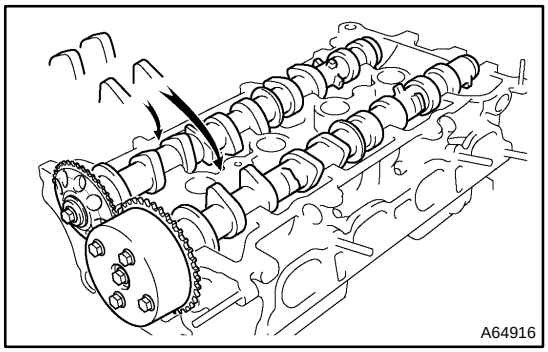

54. INSTALL CAMSHAFT

(a) Apply a light coat of engine oil on the camshaft journals.

(b) Place the 2 camshafts on the cylinder head with the No. 1 cam lobes facing as shown the illustration.

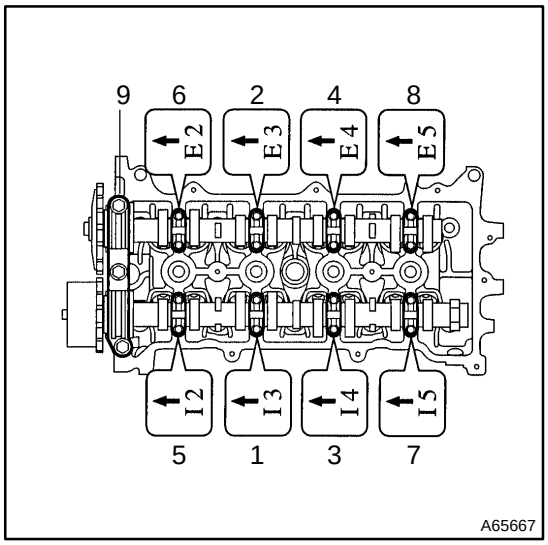

(c) Examine the front marks and numbers, then tighten the bolts in the order shown in the illustration.

Torque:

23 N·m (235 kgf·cm, 17 ft·lbf) for bearing cap No. 1

13 N·m (133 kgf·cm, 10 ft·lbf) for bearing cap No. 3

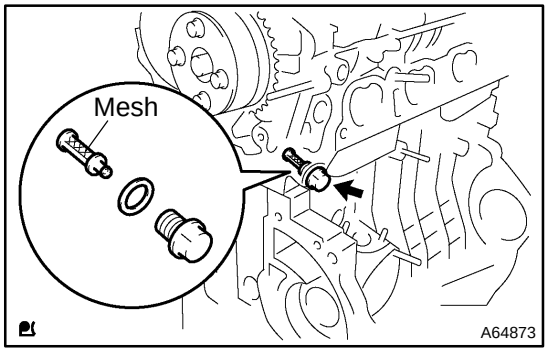

55. INSTALL OIL CONTROL VALVE FILTER

(a) Check that no foreign substance on the mesh part of the oil control valve filter.

(b) Install a new gasket and the oil control valve filter on the bolt, then install it.

Torque: 30 N·m (306 kgf·cm, 22 ft·lbf)

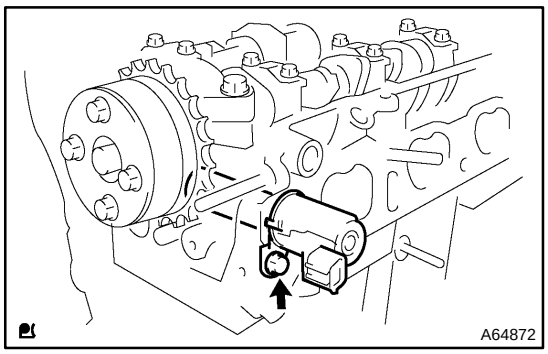

56. INSTALL CAMSHAFT TIMING OIL CONTROL VALVE ASSY

(a) Apply a light coat of engine oil to a new O–ring, then install it to the camshaft timing oil control valve.

(b) Install the camshaft timing oil control valve with the bolt.
Torque: 9.0 N·m (92 kgf·cm, 80 in.·lbf)

NOTICE:
Be careful not twist the O–ring.

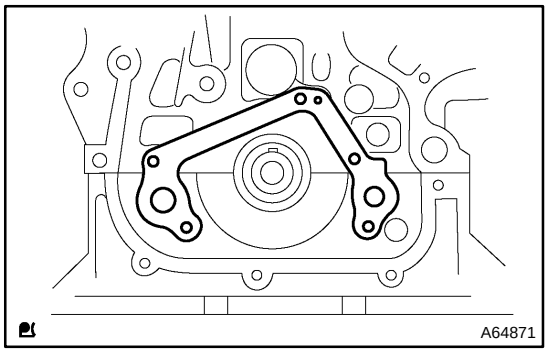

57. INSTALL OIL PUMP GASKET

(a) Install a new gasket to the cylinder block.

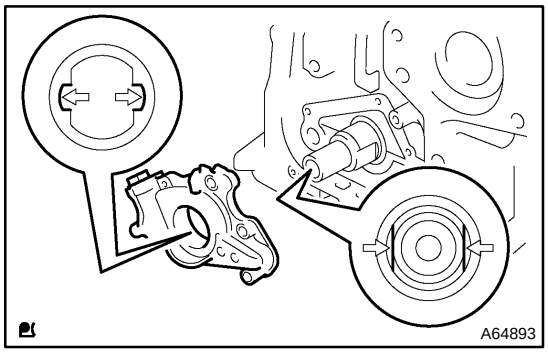

58. INSTALL OIL PUMP ASSY

(a) Engage the spline teeth of the oil pump drive rotor with the large teeth of the crankshaft, and side the oil pump into place.

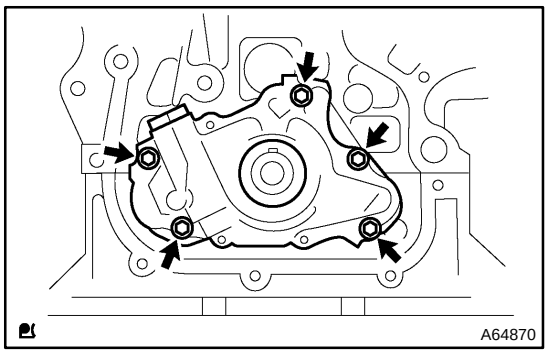

(b) Install the oil pump with the 5 bolts.
Torque: 9.0 N·m (92 kgf·cm, 80 in.·lbf)

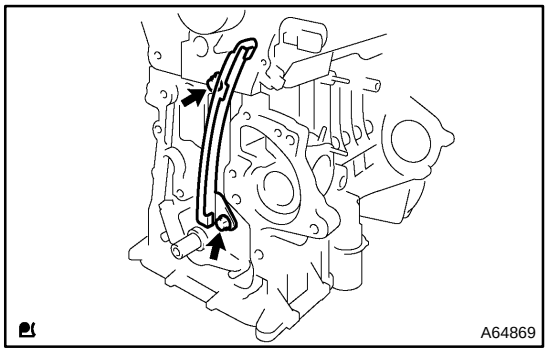

59. INSTALL CHAIN VIBRATION DAMPER NO.1

(a) Install the chain vibration damper with the 2 bolts.
Torque: 9.0 N·m (92 kgf·cm, 80 in.·lbf)

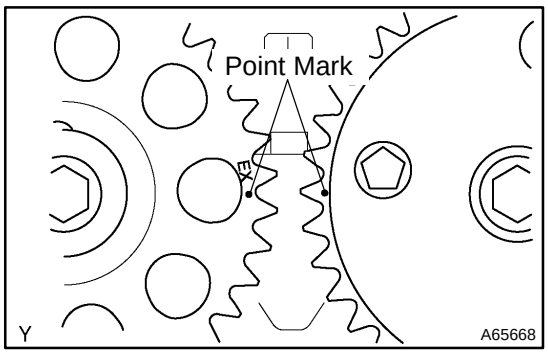

60. INSTALL CHAIN SUB–ASSY

(a) Set the No. 1 cylinder to the TDC/compression.

(1) Turn the hexagonal wrench head portion of the camshafts, then align the point marks of the camshaft timing gears.

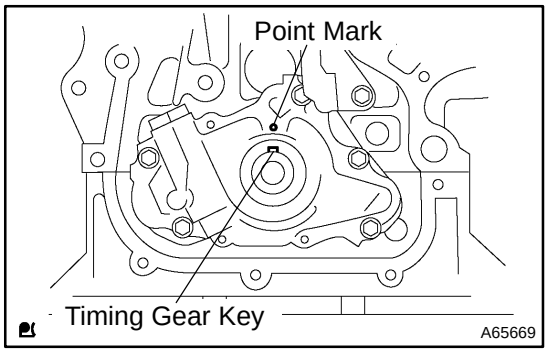

(2) Using a crankshaft pulley bolt, turn the crankshaft to align the timing gear key with the point mark located on the oil pump.

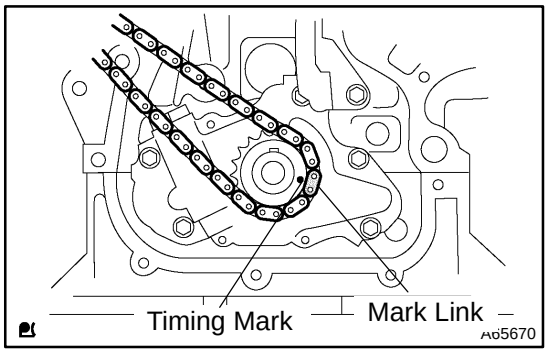

(b) Install the chain on the crankshaft timing gear with the yellow color mark link aligned with the timing mark on the crankshaft timing gear.

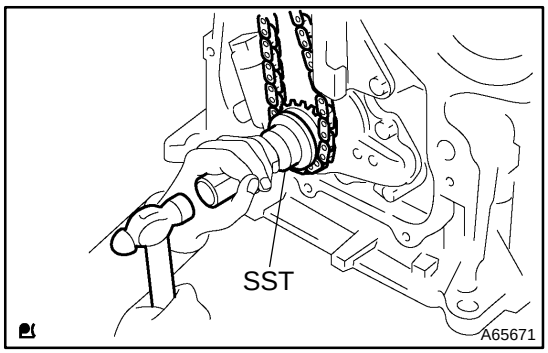

(c) Using SST, install the crankshaft timing gear.
SST 09223–22010

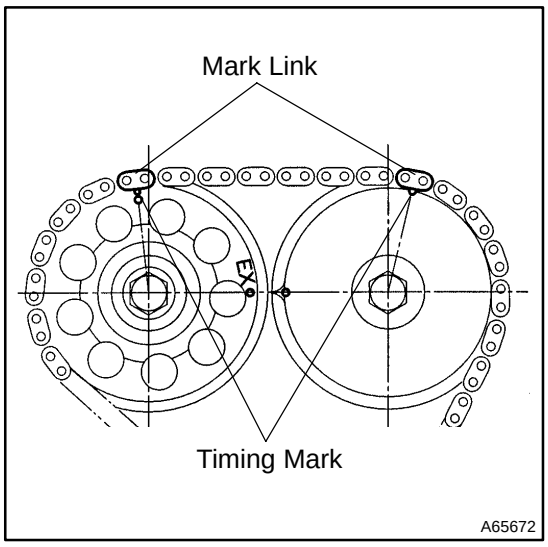

(d) Install the chain on the camshaft timing gears with the yellow color mark links aligned with the timing marks on the camshaft timing gears.

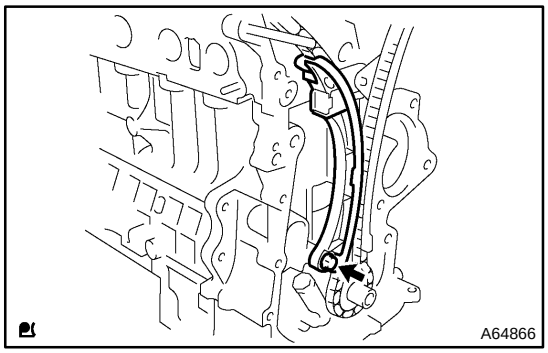

61. INSTALL CHAIN TENSIONER SLIPPER

(a) Install the chain tensioner slipper with the bolt.
Torque: 19 N·m (189 kgf·cm, 14 ft·lbf)

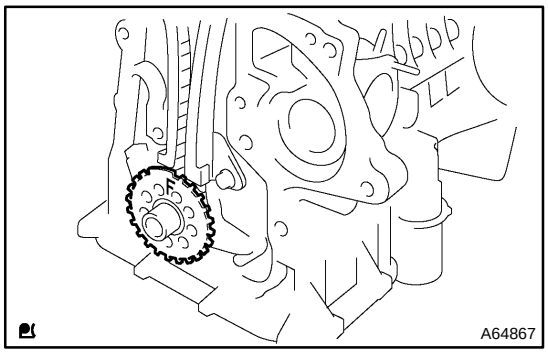

62. INSTALL CRANKSHAFT POSITION SENSOR PLATE NO.1

(a) Install the crankshaft position sensor plate with the ”F” mark facing forward.

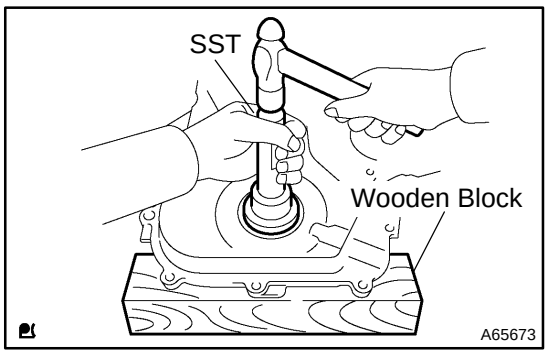

63. INSTALL TIMING CHAIN OR BELT COVER OIL SEAL

(a) Apply a light coat of multi–purpose grease to a new oil seal lip.
(b) Place the timing chain cover on wooden blocks.
(c) Using SST, tap in the oil seal until its surface is flush with the timing chain cover edge.
SST 09223–22010

NOTICE:
Keep the lip free off foreign materials.

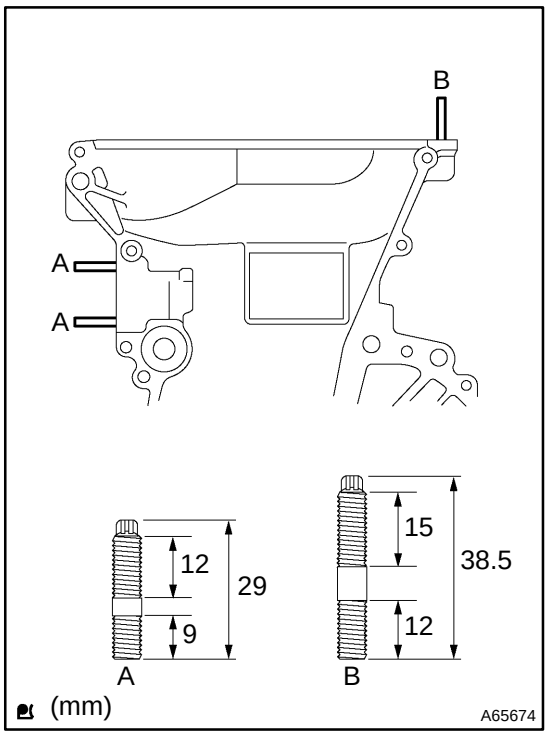

64. INSTALL TIMING CHAIN OR BELT COVER SUB–ASSY

(a) Remove any old packing material from the contact surface.

(b) Using a torx socket wrench E5, install the 3 stud bolts.
Torque: 5.0 N·m (51 kgf·cm, 44 in.·lbf)

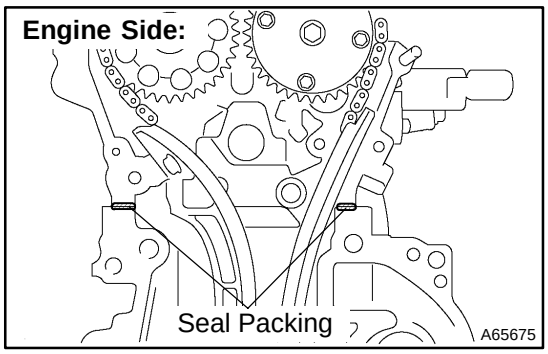

(c) Apply a continuous bead (3.5 to 4.5 mm (0.138 to 0.177 in.) diameter) of seal packing as shown in the illustration.
Seal packing:
Water pump part: Part No. 08826–00100 or equivalent
Other part: Part No. 08826–00080 or equivalent

NOTICE:

- **Remove any oil from the contact surface.**
- **Install the oil pan within 3 minutes after applying the seal packing.**
- **Do not put into engine oil within 2 hours of installation.**

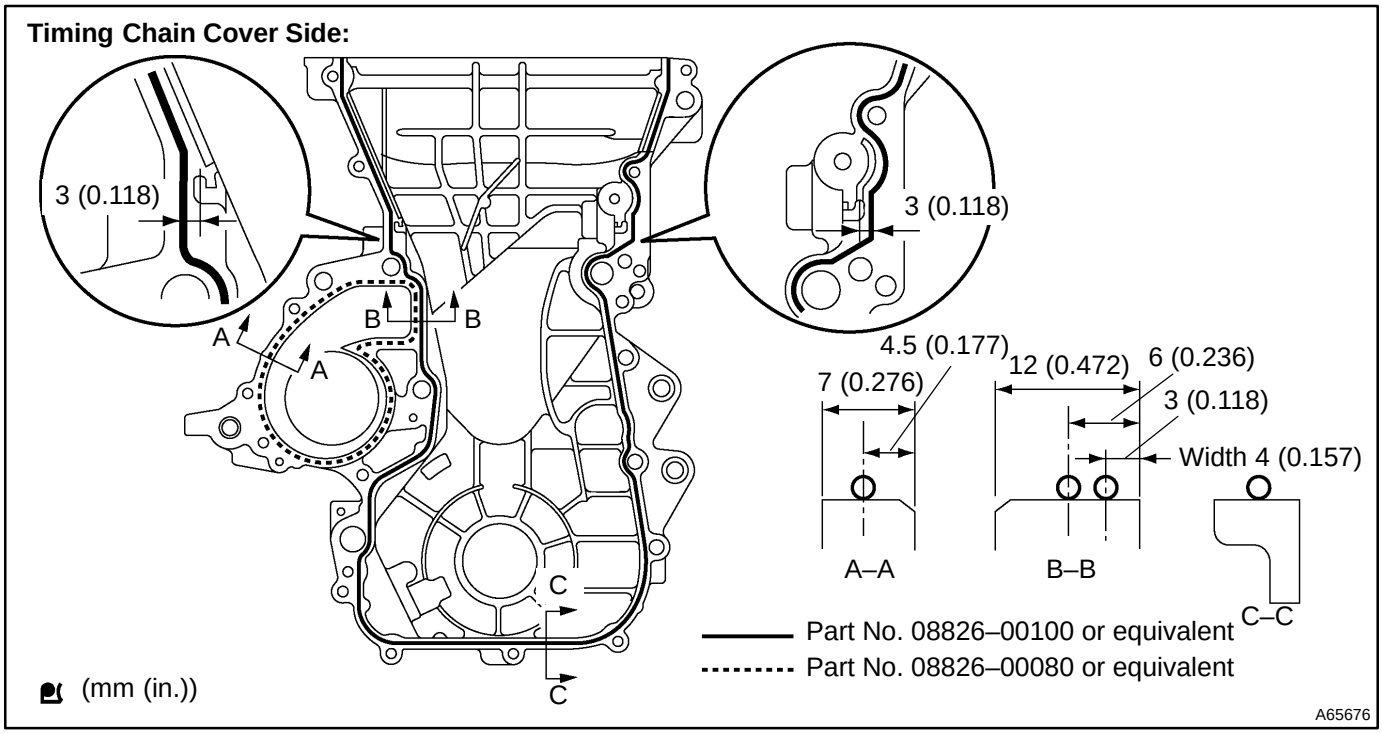

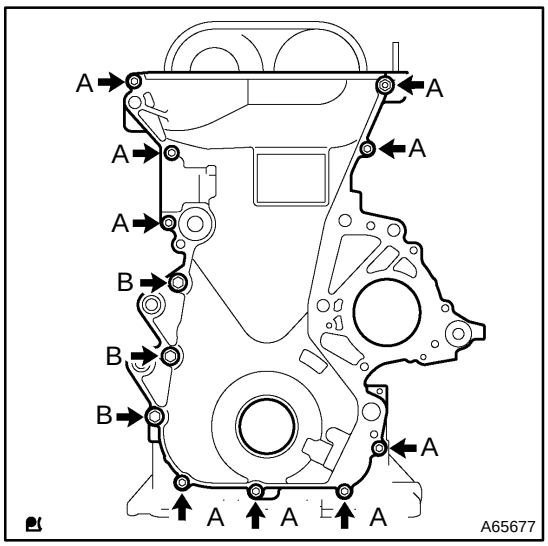

(d) Install the timing chain cover with the 12 bolts and nut.
Torque:
13 N·m (133 kgf·cm, 10 ft·lbf) for bolt A and nut A
19 N·m (189 kgf·cm, 14 ft·lbf) for bolt B

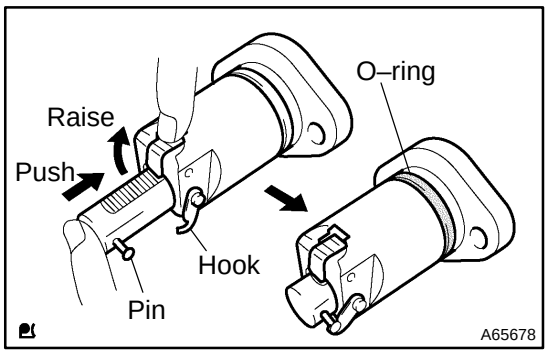

65. INSTALL CHAIN TENSIONER ASSY NO.1

(a) Check the O–ring is clean, and set the hook as shown in the illustration.

(b) Apply a light coat of engine oil to the O–ring.

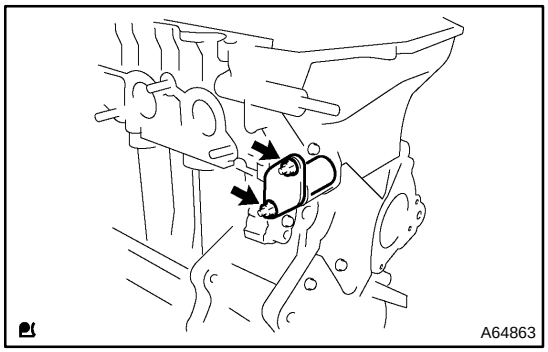

(c) Install the chain tensioner with the 2 nuts.
Torque: 9.0 N·m (92 kgf·cm, 80 in.·lbf)

NOTICE:

- **Be careful not twist the O–ring.**
- **When installing the chain tensioner, set the hook again if the hook releases the plunger.**

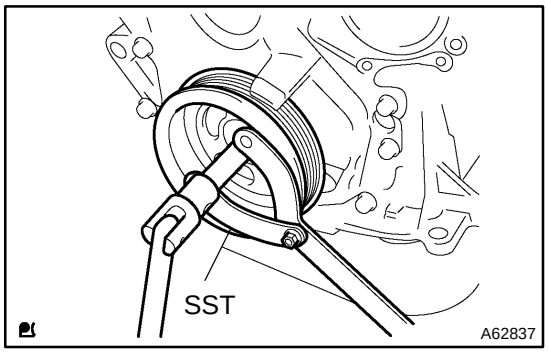

66. INSTALL CRANKSHAFT PULLEY

(a) Align the pulley set key with the key groove of the crankshaft pulley, then slide on the crankshaft pulley.

(b) Using SST, install the crankshaft pulley bolt.
SST 09960–10010 (09962–01000, 09963–01000)
Torque: 138 N·m (1,407 kgf·cm, 102 ft·lbf)

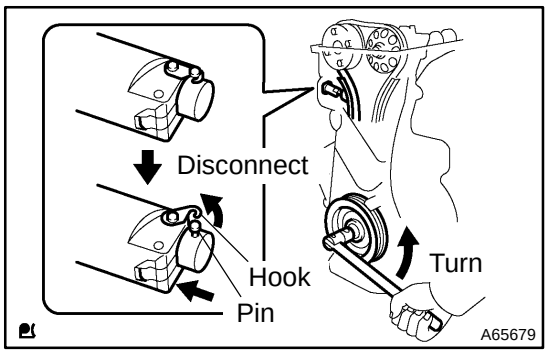

(c) Turn the crankshaft counterclockwise, then disconnect the plunger knock pin from the hook.

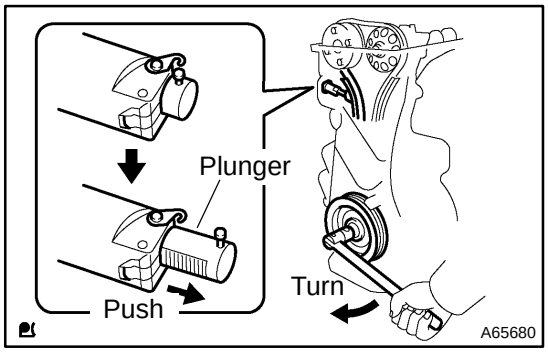

(d) Turn the crankshaft clockwise, then check that the slipper is pushed by the plunger.

HINT:

If the plunger does not spring out, press the slipper into the chain tensioner with a screwdriver so that the hook is released from the knock pin and that the plunger springs out.

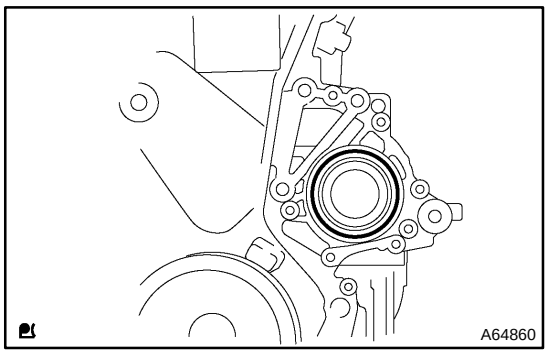

67. INSTALL WATER PUMP O–RING

(a) Install a new O–ring to the timing chain cover.

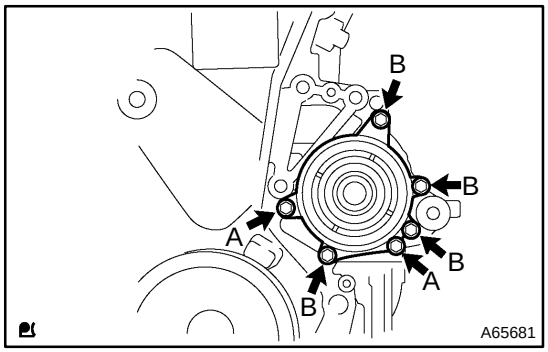

68. INSTALL WATER PUMP ASSY

(a) Install the water pump with the 6 bolts.

Torque:
9.0 N·m (92 kgf·cm, 80 in·lbf) for bolt A
11 N·m (112 kgf·cm, 8 ft·lbf) for bolt B

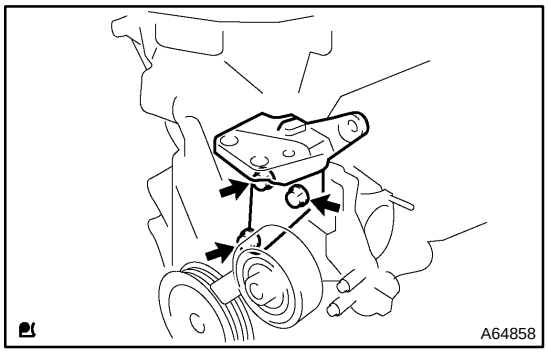

69. INSTALL TRANSVERSE ENGINE ENGINE MOUNTING BRACKET

(a) Install the transverse engine engine mounting bracket with the 3 bolts.

Torque: 47 N·m (479 kgf·cm, 35 ft·lbf)

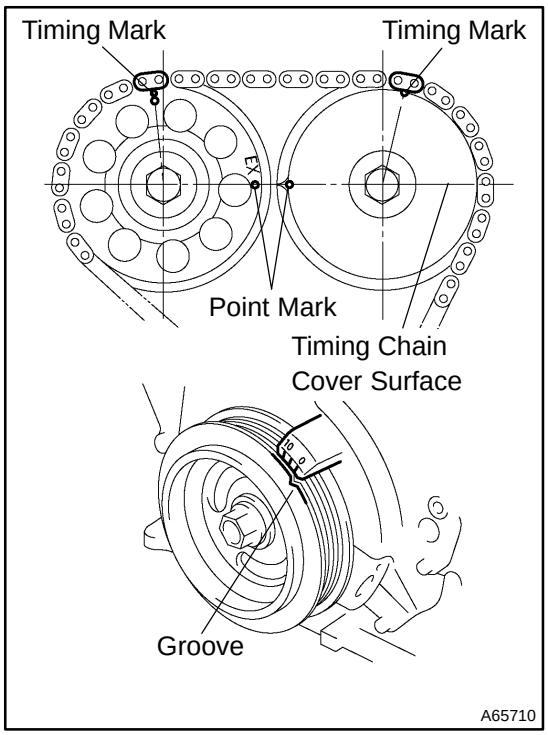

70. INSPECT VALVE CLEARANCE

(a) Set the No. 1 cylinder to the TDC/compression.
  (1) Turn the crankshaft pulley, and align its groove with timing mark ”0” of the timing chain cover.
  (2) Check that the point marks of the camshaft timing gears are in straight line on the timing chain cover surface as shown in the illustration.

HINT:
If not, turn the crankshaft 1 revolution (360°) and align the marks as above.

No. 1 Cylinder TDC/Compression:

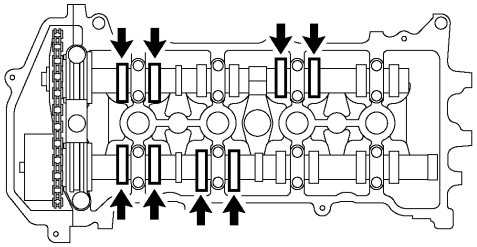

A65682

(b) Check only the valves indicated.
  (1) Using a feeler gauge, measure the clearance between the valve lifter and camshaft.
  (2) Record the out–of specification valve clearance measurements. They will be used later to determine the required replacement valve lifters.

Valve clearance (Cold):
0.15 to 0.25 mm (0.0059 to 0.0098 in.) for intake
0.25 to 0.35 mm (0.0098 to 0.0138 in.) for exhaust

No. 4 Cylinder TDC/Compression:

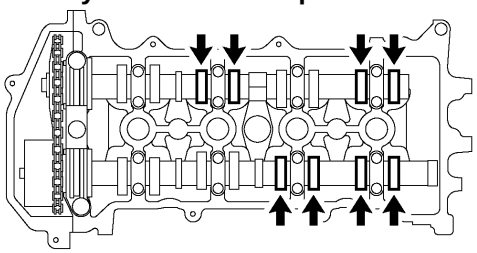

A65683

(c) Turn the crankshaft 1 revolution (360°) and set No. 4 the cylinder to the TDC/compression.
(d) Check only the valves indicated.
  (1) Using a feeler gauge, measure the clearance between the valve lifter and camshaft.
  (2) Record the out–of specification valve clearance measurements. They will be used later to determine the required replacement valve lifters.

Valve clearance (Cold):
0.15 to 0.25 mm (0.0059 to 0.0098 in.) for intake
0.25 to 0.35 mm (0.0098 to 0.0138 in.) for exhaust

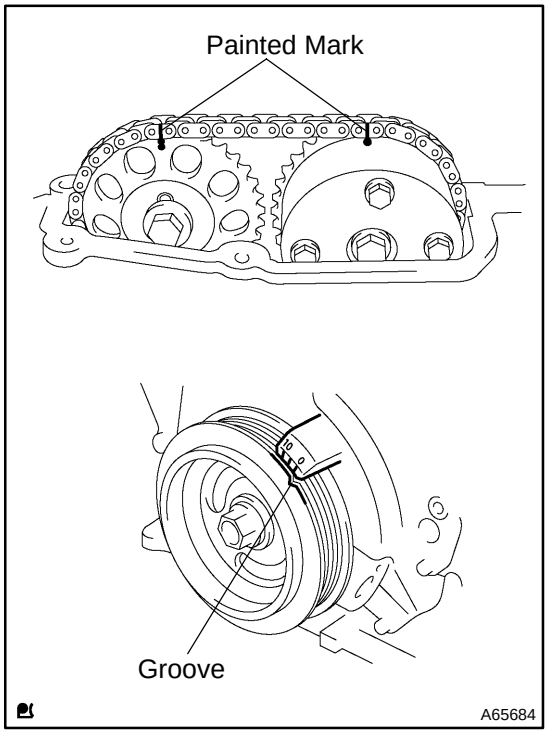

A65684

71. ADJUST VALVE CLEARANCE

NOTICE:

Be sure not to revolve the crankshaft without the chain tensioner.

(a) Set the No. 1 cylinder to the TDC/compression.
(b) Place the painted marks on the chain and camshaft timing gears.

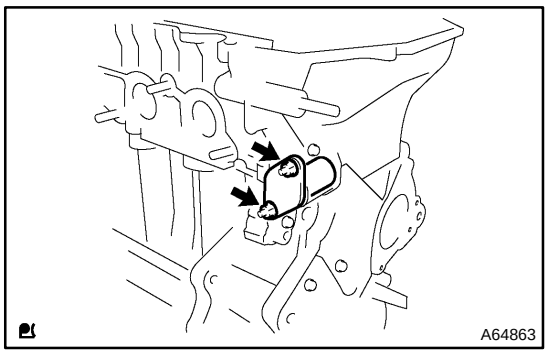

(c) Remove the 2 nuts and chain tensioner.

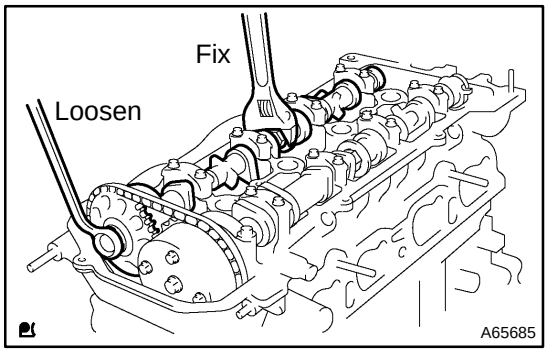

(d) Fix the camshaft with a spanner and so on, then loosen the camshaft timing gear set bolt.

NOTICE:
Be careful not to damage the valve lifter.

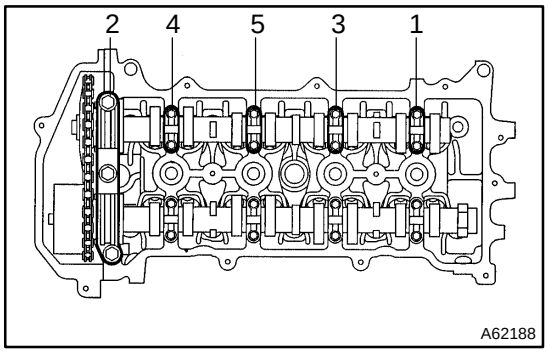

(e) Loosen the bearing cap bolts on the No. 2 camshaft in the order as shown in the illustration in several passes, then remove the bearing caps.

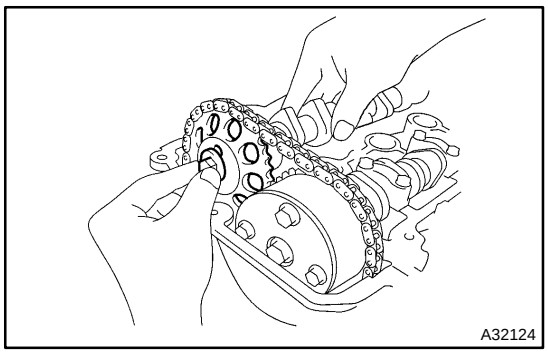

(f) Remove the camshaft timing gear as shown in the illustration.

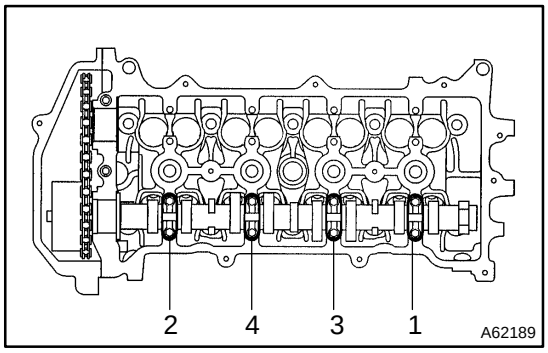

(g) Loosen the bearing cap bolts on camshaft in the order as shown in the illustration in several passes, then remove the bearing caps.

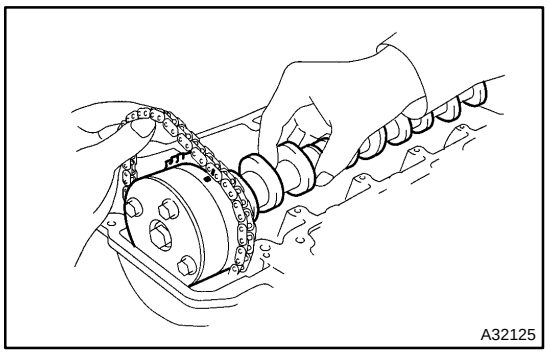

(h) Remove the camshaft while holding the chain.

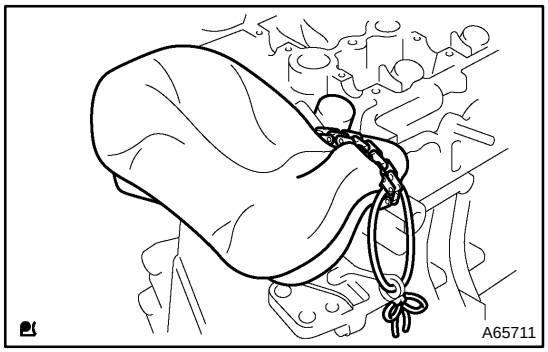

(i) Tie the chain with a string as shown in the illustration.

NOTICE:

Be careful not to drop anything inside the timing chain cover.

(j) Remove the valve lifters.

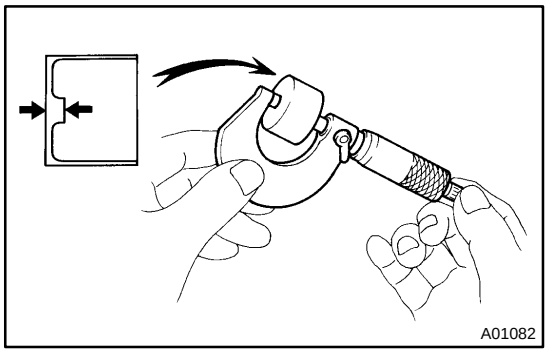

(k) Using a micrometer, measure the thickness of the removed valve lifters.

(l) Calculate the thickness of a new lifter so that the valve clearance comes within the specified value.

A	Thickness of new lifter
B	Thickness of used lifter
C	Measured valve clearance

Valve clearance:
Intake A = B + (C – 0.20 mm (0.0079 in.))
Exhaust A = B + (C – 0.30 mm (0.0118 in.))

Example (Intake):
Measure intake valve clearance = 0.40 mm (0.0158 in.)
0.40 mm (0.0158 in.) – 0.20 mm (0.0079 in.) = 0.20 mm (0.0079 in.)
(Measured – Specification = Excess clearance)
Used lifter measurement = 5.250 mm (0.2067 in.)
0.20 mm (0.0079 in.) + 5.250 mm (0.2067 in.) = 5.450 mm (0.2146 in.)
(Excess clearance + Used lifter = Ideal new lifter)
Closest new lifter = 5.460 mm (0.2150 in.)
Select No. 46 lifter

HINT:

- Select a new lifter with a thickness as close as possible to the calculated values.
- Lifter are available in 35 sizes in increments of 0.020 mm (0.0008 in.), from 5.060 mm (0.1992 in.) to 5.740 mm (0.2260 in.).
- Refer to new lifter thickness table on the next 2 pages.

Valve Lifter Selection Chart (Intake)

Measured clearance mm (in.) \ Installed lifter thickness mm (in.)	5.060 (0.1992)	5.080 (0.2000)	5.100 (0.2008)	5.120 (0.2016)	5.140 (0.2024)	5.160 (0.2031)	5.180 (0.2039)	5.200 (0.2047)	5.210 (0.2051)	5.220 (0.2055)	5.230 (0.2059)	5.240 (0.2063)	5.250 (0.2067)	5.260 (0.2071)	5.270 (0.2075)	5.280 (0.2079)	5.290 (0.2083)	5.300 (0.2087)	5.310 (0.2091)	5.320 (0.2094)	5.330 (0.2098)	5.340 (0.2102)	5.350 (0.2106)	5.360 (0.2110)	5.370 (0.2114)	5.380 (0.2118)	5.390 (0.2122)	5.400 (0.2126)	5.410 (0.2130)	5.420 (0.2134)	5.430 (0.2138)	5.440 (0.2142)	5.450 (0.2146)	5.460 (0.2150)	5.470 (0.2154)	5.480 (0.2157)	5.490 (0.2161)	5.500 (0.2165)	5.510 (0.2169)	5.520 (0.2173)	5.530 (0.2177)	5.540 (0.2181)	5.550 (0.2185)	5.560 (0.2189)	5.570 (0.2193)	5.580 (0.2197)	5.590 (0.2201)	5.600 (0.2205)	5.620 (0.2213)	5.640 (0.2220)	5.660 (0.2228)	5.680 (0.2236)	5.700 (0.2244)	5.720 (0.2252)	5.740 (0.2260)
0.000 – 0.030 (0.0000 – 0.0012)									06	06	06	06	06	08	10	10	12	12	14	14	16	16	18	18	20	20	22	22	24	24	26	26	28	28	30	30	32	32	34	34	36	36	38	38	40	40	42	42	44	46	48	50	52	54	56
0.031 – 0.050 (0.0012 – 0.0020)							06	06	06	06	08	08	10	10	12	12	14	14	16	16	18	18	20	20	22	22	24	24	26	26	28	28	30	30	32	32	34	34	36	36	38	38	40	40	42	42	44	44	46	48	50	52	54	56	58
0.051 – 0.070 (0.0020 – 0.0028)						06	06	06	08	08	10	10	12	12	14	14	16	16	18	18	20	20	22	22	24	24	26	26	28	28	30	30	32	32	34	34	36	36	38	38	40	40	42	42	44	44	46	46	48	50	52	54	56	58	60
0.071 – 0.090 (0.0028 – 0.0035)					06	06	06	08	10	10	12	12	14	14	16	16	18	18	20	20	22	22	24	24	26	26	28	28	30	30	32	32	34	34	36	36	38	38	40	40	42	42	44	44	46	46	48	48	50	52	54	56	58	60	62
0.091 – 0.110 (0.0036 – 0.0043)				06	06	06	08	10	12	12	14	14	16	16	18	18	20	20	22	22	24	24	26	26	28	28	30	30	32	32	34	34	36	36	38	38	40	40	42	42	44	44	46	46	48	48	50	50	52	54	56	58	60	62	64
0.111 – 0.130 (0.0044 – 0.0051)			06	06	06	08	10	12	14	14	16	16	18	18	20	20	22	22	24	24	26	26	28	28	30	30	32	32	34	34	36	36	38	38	40	40	42	42	44	44	46	46	48	48	50	50	52	52	54	56	58	60	62	64	66
0.131 – 0.149 (0.0052 – 0.0059)		06	06	06	08	10	12	14	16	16	18	18	20	20	22	22	24	24	26	26	28	28	30	30	32	32	34	34	36	36	38	38	40	40	42	42	44	44	46	46	48	48	50	50	52	52	54	54	56	58	60	62	64	66	68
0.150 – 0.250 (0.0059 – 0.0098)																																																								
0.251 – 0.270 (0.0099 – 0.0106)	12	14	16	18	20	22	24	26	28	28	30	30	32	32	34	34	36	36	38	38	40	40	42	42	44	44	46	46	48	48	50	50	52	52	54	54	56	56	58	58	60	60	62	62	64	64	66	66	68	70	72	74	74	74
0.271 – 0.290 (0.0107 – 0.0114)	14	16	18	20	22	24	26	28	30	30	32	32	34	34	36	36	38	38	40	40	42	42	44	44	46	46	48	48	50	50	52	52	54	54	56	56	58	58	60	60	62	62	64	64	66	66	68	68	70	72	74	74	74	
0.291 – 0.310 (0.0115 – 0.0122)	16	18	20	22	24	26	28	30	32	32	34	34	36	36	38	38	40	40	42	42	44	44	46	46	48	48	50	50	52	52	54	54	56	56	58	58	60	60	62	62	64	64	66	66	68	68	70	70	72	74	74	74		
0.311 – 0.330 (0.0122 – 0.0130)	18	20	22	24	26	28	30	32	34	34	36	36	38	38	40	40	42	42	44	44	46	46	48	48	50	50	52	52	54	54	56	56	58	58	60	60	62	62	64	64	66	66	68	68	70	70	72	72	74	74	74			
0.331 – 0.350 (0.0130 – 0.0138)	20	22	24	26	28	30	32	34	36	36	38	38	40	40	42	42	44	44	46	46	48	48	50	50	52	52	54	54	56	56	58	58	60	60	62	62	64	64	66	66	68	68	70	70	72	72	74	74	74					
0.351 – 0.370 (0.0138 – 0.0146)	22	24	26	28	30	32	34	36	38	38	40	40	42	42	44	44	46	46	48	48	50	50	52	52	54	54	56	56	58	58	60	60	62	62	64	64	66	66	68	68	70	70	72	72	74	74	74	74						
0.371 – 0.390 (0.0146 – 0.0154)	24	26	28	30	32	34	36	38	40	40	42	42	44	44	46	46	48	48	50	50	52	52	54	54	56	56	58	58	60	60	62	62	64	64	66	66	68	68	70	70	72	72	74	74	74	74	74	74						
0.391 – 0.410 (0.0154 – 0.0161)	26	28	30	32	34	36	38	40	42	42	44	44	46	46	48	48	50	50	52	52	54	54	56	56	58	58	60	60	62	62	64	64	66	66	68	68	70	70	72	72	74	74	74	74	74	74	74							
0.411 – 0.430 (0.0162 – 0.0169)	28	30	32	34	36	38	40	42	44	44	46	46	48	48	50	50	52	52	54	54	56	56	58	58	60	60	62	62	64	64	66	66	68	68	70	70	72	72	74	74	74	74	74	74	74								
0.431 – 0.450 (0.0170 – 0.0177)	30	32	34	36	38	40	42	44	46	46	48	48	50	50	52	52	54	54	56	56	58	58	60	60	62	62	64	64	66	66	68	68	70	70	72	72	74	74	74	74	74	74	74											
0.451 – 0.470 (0.0178 – 0.0185)	32	34	36	38	40	42	44	46	48	48	50	50	52	52	54	54	56	56	58	58	60	60	62	62	64	64	66	66	68	68	70	70	72	72	74	74	74	74	74	74														
0.471 – 0.490 (0.0185 – 0.0193)	34	36	38	40	42	44	46	48	50	50	52	52	54	54	56	56	58	58	60	60	62	62	64	64	66	66	68	68	70	70	72	72	74	74	74	74	74	74																
0.491 – 0.510 (0.0193 – 0.0201)	36	38	40	42	44	46	48	50	52	52	54	54	56	56	58	58	60	60	62	62	64	64	66	66	68	68	70	70	72	72	74	74	74	74	74	74																		
0.511 – 0.530 (0.0201 – 0.0209)	38	40	42	44	46	48	50	52	54	54	56	56	58	58	60	60	62	62	64	64	66	66	68	68	70	70	72	72	74	74	74	74	74	74																			
0.531 – 0.550 (0.0209 – 0.0217)	40	42	44	46	48	50	52	54	56	56	58	58	60	60	62	62	64	64	66	66	68	68	70	70	72	72	74	74	74	74	74	74																				
0.551 – 0.570 (0.0217 – 0.0224)	42	44	46	48	50	52	54	56	58	58	60	60	62	62	64	64	66	66	68	68	70	70	72	72	74	74	74	74	74	74	74																					
0.571 – 0.590 (0.0225 – 0.0232)	44	46	48	50	52	54	56	58	60	60	62	62	64	64	66	66	68	68	70	70	72	72	74	74	74	74	74	74																						
0.591 – 0.610 (0.0233 – 0.0240)	46	48	50	52	54	56	58	60	62	62	64	64	66	66	68	68	70	70	72	72	74	74	74	74	74	74																						
0.611 – 0.630 (0.0241 – 0.0248)	48	50	52	54	56	58	60	62	64	64	66	66	68	68	70	70	72	72	74	74	74	74	74	74																						
0.631 – 0.650 (0.0248 – 0.0256)	50	52	54	56	58	60	62	64	66	66	68	68	70	70	72	72	74	74	74	74	74	74	74	74																						
0.651 – 0.670 (0.0256 – 0.0264)	52	54	56	58	60	62	64	66	68	68	70	70	72	72	74	74	74	74	74	74	74																									
0.671 – 0.690 (0.0264 – 0.0272)	54	56	58	60	62	64	66	68	70	70	72	72	74	74	74	74	74	74	74																									
0.691 – 0.710 (0.0272 – 0.0280)	56	58	60	62	64	66	68	70	72	72	74	74	74	74	74	74	74																											
0.711 – 0.730 (0.0280 – 0.0287)	58	60	62	64	66	68	70	72	74	74	74	74	74	74	74																											
0.731 – 0.750 (0.0288 – 0.0295)	60	62	64	66	68	70	72	74	74	74	74	74	74																											
0.751 – 0.770 (0.0296 – 0.0303)	62	64	66	68	70	72	74	74	74	74	74																													
0.771 – 0.790 (0.0304 – 0.0311)	64	66	68	70	72	74	74	74																															
0.791 – 0.810 (0.0311 – 0.0319)	66	68	70	72	74	74	74																																
0.811 – 0.830 (0.0319 – 0.0327)	68	70	72	74	74	74																																	
0.831 – 0.850 (0.0327 – 0.0335)	70	72	74	74	74																																		
0.851 – 0.870 (0.0335 – 0.0343)	72	74	74	74																																			
0.871 – 0.890 (0.0343 – 0.0350)	74	74	74																																				
0.891 – 0.910 (0.0351 – 0.0358)	74	74																																					
0.911 – 0.930 (0.0359 – 0.0366)	74																																						

Intake valve clearance (Cold):
0.15 to 0.25 mm (0.006 to 0.010 in.)

EXAMPLE: The 5.250 mm (0.2067 in.) lifter is installed, and the measured clearance is 0.400 mm (0.0157 in.).
Replace the 5.250 mm (0.2067 in.) lifter with a new No. 46 lifter.

New lifter thickness mm (in.)

Lifter No.	Thickness	Lifter No.	Thickness	Lifter No.	Thickness
06	5.060 (0.1992)	30	5.300 (0.2087)	54	5.540 (0.2181)
08	5.080 (0.2000)	32	5.320 (0.2094)	56	5.560 (0.2189)
10	5.100 (0.2008)	34	5.340 (0.2102)	58	5.580 (0.2197)
12	5.120 (0.2016)	36	5.360 (0.2110)	60	5.600 (0.2205)
14	5.140 (0.2024)	38	5.380 (0.2118)	62	5.620 (0.2213)
16	5.160 (0.2031)	40	5.400 (0.2126)	64	5.640 (0.2220)
18	5.180 (0.2039)	42	5.420 (0.2134)	66	5.660 (0.2228)
20	5.200 (0.2047)	44	5.440 (0.2142)	68	5.680 (0.2236)
22	5.220 (0.2055)	46	5.460 (0.2150)	70	5.700 (0.2244)
24	5.240 (0.2063)	48	5.480 (0.2157)	72	5.720 (0.2252)
26	5.260 (0.2071)	50	5.500 (0.2165)	74	5.740 (0.2260)
28	5.280 (0.2079)	52	5.520 (0.2173)		

A79322

Valve Lifter Selection Chart (Exhaust)

Measured clearance mm (in.) \ Installed lifter thickness mm (in.)	5.060 (0.1992)	5.080 (0.2000)	5.100 (0.2008)	5.120 (0.2016)	5.140 (0.2024)	5.160 (0.2031)	5.180 (0.2039)	5.200 (0.2047)	5.210 (0.2051)	5.220 (0.2055)	5.230 (0.2059)	5.240 (0.2063)	5.250 (0.2067)	5.260 (0.2071)	5.270 (0.2075)	5.280 (0.2079)	5.290 (0.2083)	5.300 (0.2087)	5.310 (0.2091)	5.320 (0.2094)	5.330 (0.2098)	5.340 (0.2102)	5.350 (0.2106)	5.360 (0.2110)	5.370 (0.2114)	5.380 (0.2118)	5.390 (0.2122)	5.400 (0.2126)	5.410 (0.2130)	5.420 (0.2134)	5.430 (0.2138)	5.440 (0.2142)	5.450 (0.2146)	5.460 (0.2150)	5.470 (0.2154)	5.480 (0.2157)	5.490 (0.2161)	5.500 (0.2165)	5.510 (0.2169)	5.520 (0.2173)	5.530 (0.2177)	5.540 (0.2181)	5.550 (0.2185)	5.560 (0.2189)	5.570 (0.2193)	5.580 (0.2197)	5.590 (0.2201)	5.600 (0.2205)	5.620 (0.2213)	5.640 (0.2220)	5.660 (0.2228)	5.680 (0.2236)	5.700 (0.2244)	5.720 (0.2252)	5.740 (0.2260)
0.000 – 0.030 (0.0000 – 0.0012)																			06	06	06	06	08	08	10	10	12	12	14	14	16	16	18	18	20	20	22	22	24	24	26	26	28	28	30	30	32	32	34	36	38	40	42	44	46
0.031 – 0.050 (0.0012 – 0.0020)															06	06	06	06	06	08	08	10	10	12	12	14	14	16	16	18	18	20	20	22	22	24	24	26	26	28	28	30	30	32	32	34	34	36	38	40	42	44	46	48
0.051 – 0.070 (0.0020 – 0.0028)														06	06	06	06	06	08	08	10	10	12	12	14	14	16	16	18	18	20	20	22	22	24	24	26	26	28	28	30	30	32	32	34	34	36	36	38	40	42	44	46	48	50
0.071 – 0.090 (0.0028 – 0.0035)												06	06	06	06	06	08	08	10	10	12	12	14	14	16	16	18	18	20	20	22	22	24	24	26	26	28	28	30	30	32	32	34	34	36	36	38	38	40	42	44	46	48	50	52
0.091 – 0.110 (0.0036 – 0.0043)											06	06	06	06	08	08	10	10	12	12	14	14	16	16	18	18	20	20	22	22	24	24	26	26	28	28	30	30	32	32	34	34	36	36	38	38	40	40	42	44	46	48	50	52	54
0.111 – 0.130 (0.0044 – 0.0051)									06	06	06	06	08	08	10	10	12	12	14	14	16	16	18	18	20	20	22	22	24	24	26	26	28	28	30	30	32	32	34	34	36	36	38	38	40	40	42	42	44	46	48	50	52	54	56
0.131 – 0.150 (0.0052 – 0.0059)								06	06	06	08	08	10	10	12	12	14	14	16	16	18	18	20	20	22	22	24	24	26	26	28	28	30	30	32	32	34	34	36	36	38	38	40	40	42	42	44	46	48	50	52	54	56	58
0.151 – 0.170 (0.0059 – 0.0067)						06	06	06	08	08	10	10	12	12	14	14	16	16	18	18	20	20	22	22	24	24	26	26	28	28	30	30	32	32	34	34	36	36	38	38	40	40	42	42	44	44	46	46	48	50	52	54	56	58	60
0.171 – 0.190 (0.0067 – 0.0075)					06	06	06	08	10	10	12	12	14	14	16	16	18	18	20	20	22	22	24	24	26	26	28	28	30	30	32	32	34	34	36	36	38	38	40	40	42	42	44	44	46	46	48	48	50	52	54	56	58	60	62
0.191 – 0.210 (0.0075 – 0.0083)				06	06	06	08	10	12	12	14	14	16	16	18	18	20	20	22	22	24	24	26	26	28	28	30	30	32	32	34	34	36	36	38	38	40	40	42	42	44	44	46	46	48	48	50	50	52	54	56	58	60	62	64
0.211 – 0.230 (0.0083 – 0.0091)			06	06	06	08	10	12	14	14	16	16	18	18	20	20	22	22	24	24	26	26	28	28	30	30	32	32	34	34	36	36	38	38	40	40	42	42	44	44	46	46	48	48	50	50	52	52	54	56	58	60	62	64	66
0.231 – 0.249 (0.0091 – 0.0098)		06	06	06	08	10	12	14	16	16	18	18	20	20	22	22	24	24	26	26	28	28	30	30	32	32	34	34	36	36	38	38	40	40	42	42	44	44	46	46	48	48	50	50	52	52	54	54	56	58	60	62	64	66	68
0.250 – 0.350 (0.0098 – 0.0138)																																																										
0.351 – 0.370 (0.0138 – 0.0146)	12	14	16	18	20	22	24	26	28	28	30	30	32	32	34	34	36	36	38	38	40	40	42	42	44	44	46	46	48	48	50	50	52	52	54	54	56	56	58	58	60	60	62	62	64	64	66	66	68	70	72	74	74	74
0.371 – 0.390 (0.0146 – 0.0154)	14	16	18	20	22	24	26	28	30	30	32	32	34	34	36	36	38	38	40	40	42	42	44	44	46	46	48	48	50	50	52	52	54	54	56	56	58	58	60	60	62	62	64	64	66	66	68	68	70	72	74	74	74	
0.391 – 0.410 (0.0154 – 0.0161)	16	18	20	22	24	26	28	30	32	32	34	34	36	36	38	38	40	40	42	42	44	44	46	46	48	48	50	50	52	52	54	54	56	56	58	58	60	60	62	62	64	64	66	66	68	68	70	70	72	74	74	74		
0.411 – 0.430 (0.0162 – 0.0169)	18	20	22	24	26	28	30	32	34	34	36	36	38	38	40	40	42	42	44	44	46	46	48	48	50	50	52	52	54	54	56	56	58	58	60	60	62	62	64	64	66	66	68	68	70	70	72	72	74	74	74			
0.431 – 0.450 (0.0170 – 0.0177)	20	22	24	26	28	30	32	34	36	36	38	38	40	40	42	42	44	44	46	46	48	48	50	50	52	52	54	54	56	56	58	58	60	60	62	62	64	64	66	68	68	70	70	72	72	74	74	74	74					
0.451 – 0.470 (0.0178 – 0.0185)	22	24	26	28	30	32	34	36	38	38	40	40	42	42	44	44	46	46	48	48	50	50	52	52	54	54	56	56	58	58	60	60	62	62	64	64	66	66	68	68	70	70	72	72	74	74	74	74						
0.471 – 0.490 (0.0185 – 0.0193)	24	26	28	30	32	34	36	38	40	40	42	42	44	44	46	46	48	48	50	50	52	52	54	54	56	56	58	58	60	60	62	62	64	64	66	66	68	68	70	70	72	72	74	74	74	74	74	74						
0.491 – 0.510 (0.0193 – 0.0201)	26	28	30	32	34	36	38	40	42	42	44	44	46	46	48	48	50	50	52	52	54	54	56	56	58	58	60	60	62	62	64	64	66	66	68	68	70	70	72	72	74	74	74	74	74	74								
0.511 – 0.530 (0.0201 – 0.0209)	28	30	32	34	36	38	40	42	44	44	46	46	48	48	50	50	52	52	54	54	56	56	58	58	60	60	62	62	64	64	66	66	68	68	70	70	72	72	74	74	74	74	74	74										
0.531 – 0.550 (0.0209 – 0.0217)	30	32	34	36	38	40	42	44	46	46	48	48	50	50	52	52	54	54	56	56	58	58	60	60	62	62	64	64	66	66	68	68	70	70	72	72	74	74	74	74	74	74												
0.551 – 0.570 (0.0217 – 0.0224)	32	34	36	38	40	42	44	46	48	48	50	50	52	52	54	54	56	56	58	58	60	60	62	62	64	64	66	66	68	68	70	70	72	72	74	74	74	74	74	74														
0.571 – 0.590 (0.0225 – 0.0232)	34	36	38	40	42	44	46	48	50	50	52	52	54	54	56	56	58	58	60	60	62	62	64	64	66	66	68	68	70	70	72	72	74	74	74	74	74	74																
0.591 – 0.610 (0.0233 – 0.0240)	36	38	40	42	44	46	48	50	52	52	54	54	56	56	58	58	60	60	62	62	64	64	66	66	68	68	70	70	72	72	74	74	74	74	74	74																		
0.611 – 0.630 (0.0241 – 0.0248)	38	40	42	44	46	48	50	52	54	54	56	56	58	58	60	60	62	62	64	64	66	66	68	68	70	70	72	72	74	74	74	74	74	74																				
0.631 – 0.650 (0.0248 – 0.0256)	40	42	44	46	48	50	52	54	56	56	58	58	60	60	62	62	64	64	66	66	68	68	70	70	72	72	74	74	74	74	74	74																						
0.651 – 0.670 (0.0256 – 0.0264)	42	44	46	48	50	52	54	56	58	58	60	60	62	62	64	64	66	66	68	68	70	70	72	72	74	74	74	74	74	74																								
0.671 – 0.690 (0.0264 – 0.0272)	44	46	48	50	52	54	56	58	60	60	62	62	64	64	66	66	68	68	70	70	72	72	74	74	74	74	74	74																									
0.691 – 0.710 (0.0272 – 0.0280)	46	48	50	52	54	56	58	60	62	62	64	64	66	66	68	68	70	70	72	72	74	74	74	74	74	74																									
0.711 – 0.730 (0.0280 – 0.0287)	48	50	52	54	56	58	60	62	64	64	66	66	68	68	70	70	72	72	74	74	74	74	74	74																									
0.731 – 0.750 (0.0288 – 0.0295)	50	52	54	56	58	60	62	64	66	66	68	68	70	70	72	72	74	74	74	74	74	74																									
0.751 – 0.770 (0.0296 – 0.0303)	52	54	56	58	60	62	64	66	68	68	70	70	72	72	74	74	74	74	74	74																									
0.771 – 0.790 (0.0304 – 0.0311)	54	56	58	60	62	64	66	68	70	70	72	72	74	74	74	74	74	74																											
0.791 – 0.810 (0.0311 – 0.0319)	56	58	60	62	64	66	68	70	72	72	74	74	74	74	74	74																											
0.811 – 0.830 (0.0319 – 0.0327)	58	60	62	64	66	68	70	72	74	74	74	74	74	74																											
0.831 – 0.850 (0.0327 – 0.0335)	60	62	64	66	68	70	72	74	74	74	74	74																											
0.851 – 0.870 (0.0335 – 0.0343)	62	64	66	68	70	72	74	74	74	74																											
0.871 – 0.890 (0.0343 – 0.0350)	64	66	68	70	72	74	74	74																													
0.891 – 0.910 (0.0351 – 0.0358)	66	68	70	72	74	74	74																														
0.911 – 0.930 (0.0359 – 0.0366)	68	70	72	74	74	74																															
0.931 – 0.950 (0.0367 – 0.0374)	70	72	74	74	74																																
0.951 – 0.970 (0.0374 – 0.0382)	72	74	74	74																																	
0.971 – 0.990 (0.0382 – 0.0390)	74	74	74																																		
0.991 – 1.010 (0.0390 – 0.0398)	74	74																																			
1.011 – 1.030 (0.0398 – 0.0406)	74																																				

A79323

Exhaust valve clearance (Cold):

0.25 to 0.35 mm (0.010 to 0.014 in.)

EXAMPLE: The 5.340 mm (0.2102 in.) lifter is installed, and the measured clearance is 0.440 mm (0.0173 in.).

Replace the 5.340 mm (0.2102 in.) lifter with a new No. 48 lifter.

New lifter thickness mm (in.)

Lifter No.	Thickness	Lifter No.	Thickness	Lifter No.	Thickness
06	5.060 (0.1992)	30	5.300 (0.2087)	54	5.540 (0.2181)
08	5.080 (0.2000)	32	5.320 (0.2094)	56	5.560 (0.2189)
10	5.100 (0.2008)	34	5.340 (0.2102)	58	5.580 (0.2197)
12	5.120 (0.2016)	36	5.360 (0.2110)	60	5.600 (0.2205)
14	5.140 (0.2024)	38	5.380 (0.2118)	62	5.620 (0.2213)
16	5.160 (0.2031)	40	5.400 (0.2126)	64	5.640 (0.2220)
18	5.180 (0.2039)	42	5.420 (0.2134)	66	5.660 (0.2228)
20	5.200 (0.2047)	44	5.440 (0.2142)	68	5.680 (0.2236)
22	5.220 (0.2055)	46	5.460 (0.2150)	70	5.700 (0.2244)
24	5.240 (0.2063)	48	5.480 (0.2157)	72	5.720 (0.2252)
26	5.260 (0.2071)	50	5.500 (0.2165)	74	5.740 (0.2260)
28	5.280 (0.2079)	52	5.520 (0.2173)		

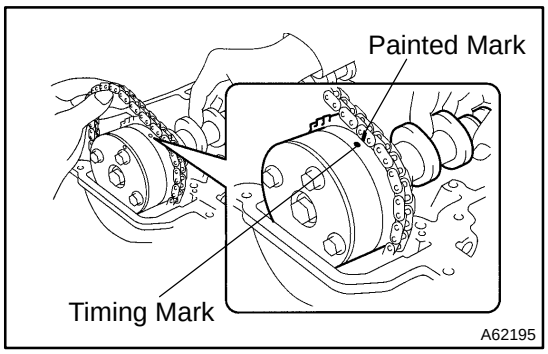

(m) As shown in the illustration, install the chain on the camshaft timing gear with the painted mark aligned with the timing mark on the camshaft timing gear.

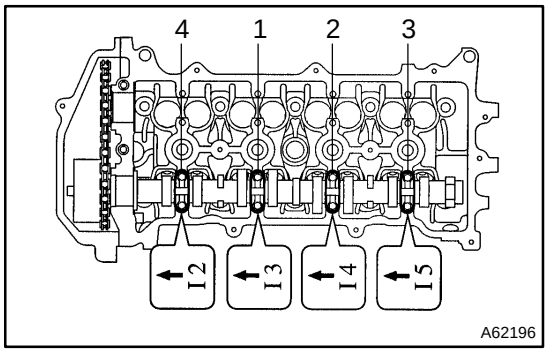

(n) Examine the front marks and numbers, then tighten the bolts in the order shown in the illustration.
Torque: 13 N·m (133 kgf·cm, 10 ft·lbf)

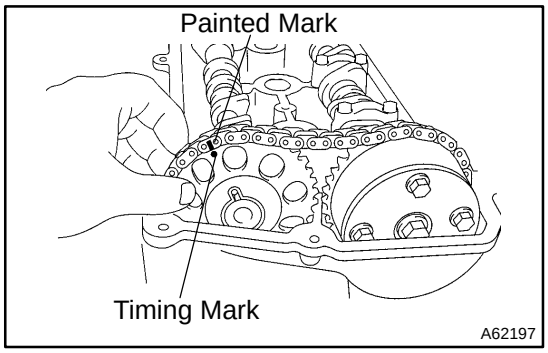

(o) Put the camshaft No. 2 on the cylinder head with the painted mark of the chain aligned with the timing mark on the camshaft timing gear.

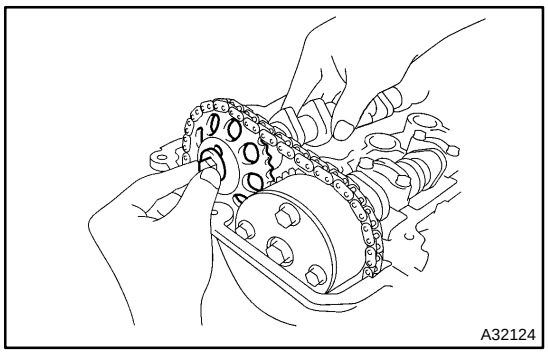

(p) Raise the camshaft, then tighten the set bolt temporarily.

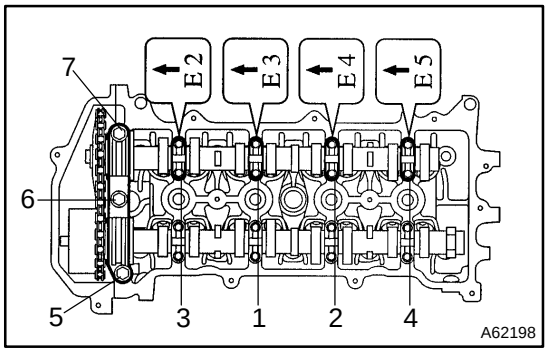

(q) Examine the front marks and numbers, then tighten the bolts in the order shown in the illustration.
Torque:
23 N·m (235 kgf·cm, 17 ft·lbf) for bearing cap No. 1
13 N·m (133 kgf·cm, 10 ft·lbf) for bearing cap No. 3

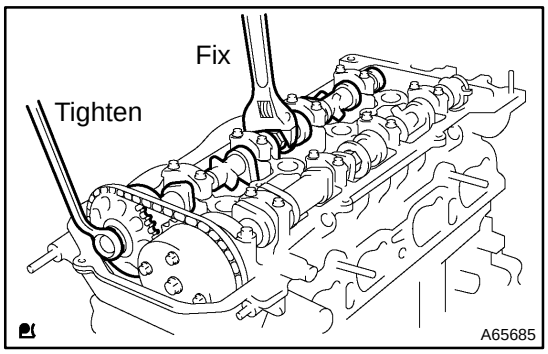

(r) Fix the camshaft with a spanner and so on, then tighten the camshaft timing gear set bolt.

Torque: 54 N·m (551 kgf·cm, 40 ft·lbf)

NOTICE:

Be careful not to damage the valve lifter.

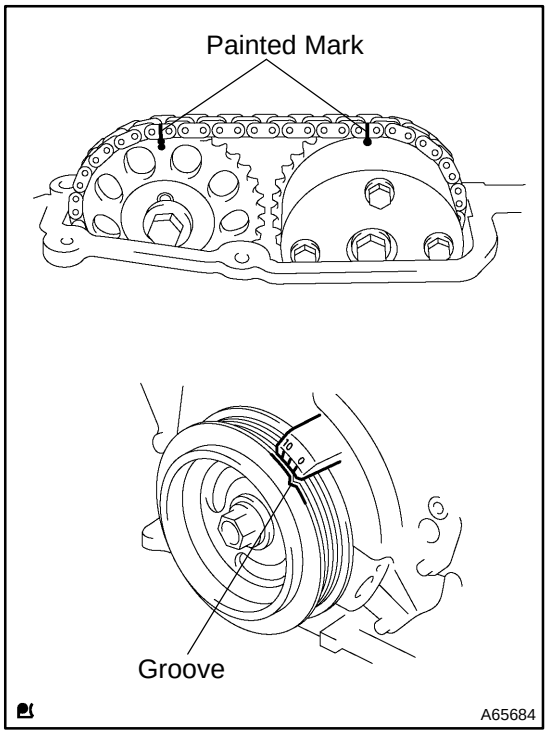

(s) Check the painted marks on the chain and camshaft timing gears. Then, check that the crankshaft pulley groove and the timing mark of the timing chain cover are aligned as shown in the illustration.

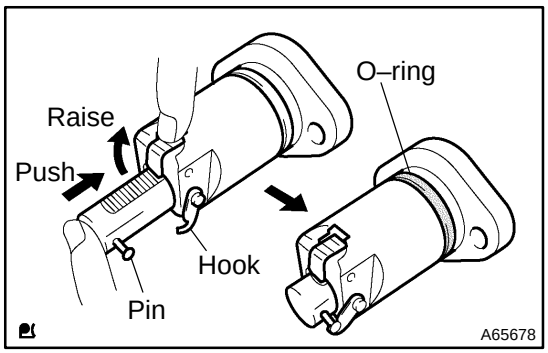

(t) Install the chain tensioner.

(1) Check the O–ring is clean, and set the hook as shown in the illustration.

(2) Apply a light coat of engine oil to the O–ring.

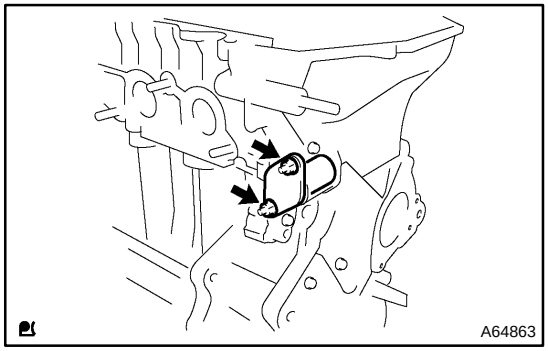

(3) Install the chain tensioner with the 2 nuts.

Torque: 9.0 N·m (92 kgf·cm, 80 in·lbf)

NOTICE:

- **Be careful not twist the O–ring.**
- **When installing the tensioner, set the hook again if the hook releases the plunger.**

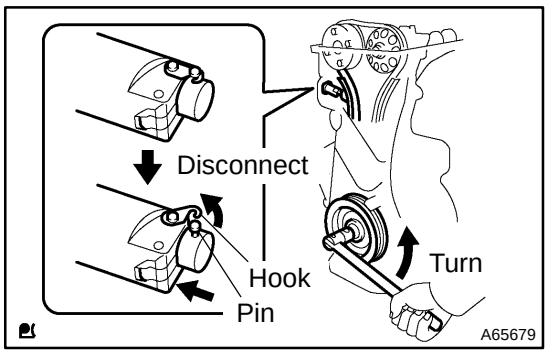

(4) Turn the crankshaft counterclockwise, then disconnect the plunger knock pin from the hook.

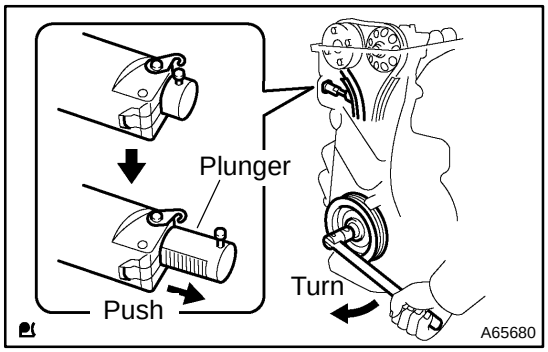

(5) Turn the crankshaft clockwise, then check that the slipper is pushed by the plunger.

HINT:
If the plunger does not spring out, press the slipper into the chain tensioner with a screwdriver so that the hook is released from the knock pin and that the plunger springs out.

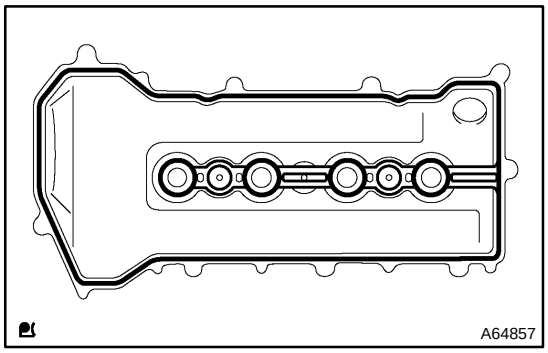

72. INSTALL CYLINDER HEAD COVER GASKET

(a) Install the gasket to the cylinder head cover.

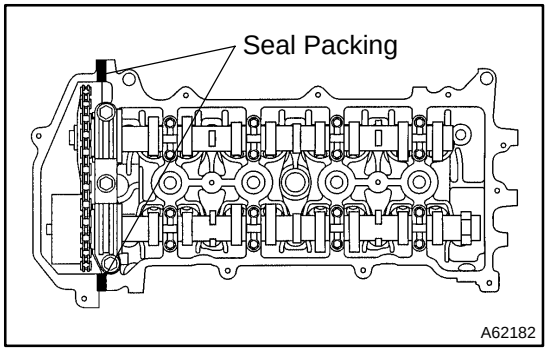

73. INSTALL CYLINDER HEAD COVER SUB–ASSY

(a) Remove any old packing (FIPG) material.

(b) Apply the seal packing to the 2 locations as shown in the illustration.

Seal packing: Part No. 08826–00080 or equivalent

NOTICE:

- **Remove any oil from the contact surface.**
- **Install the cylinder head cover within 3 minutes after applying the seal packing.**
- **Do not put into engine oil 2 hours of installation.**

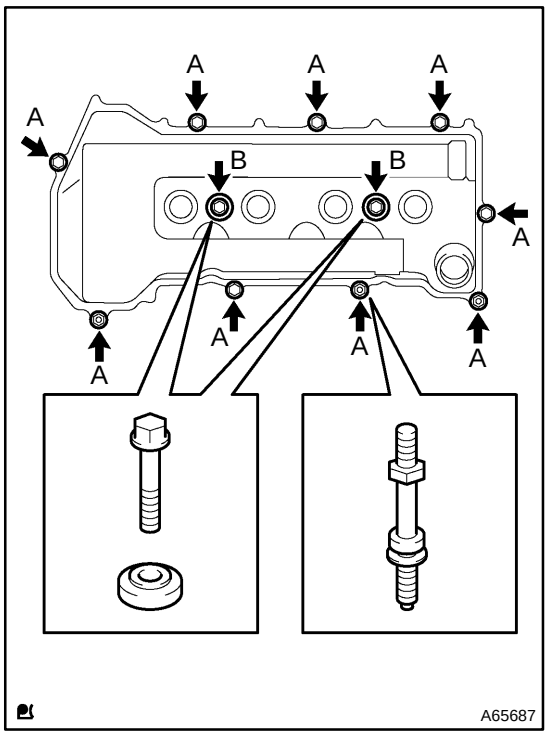

(c) Install the cylinder head cover with the 9 bolts, 2 seal washers and 2 nuts.
Torque:
11 N·m (112 kgf·cm, 8 ft·lbf) for bolt A and nut A
9.0 N·m (92 kgf·cm, 80 in·lbf) for bolt B

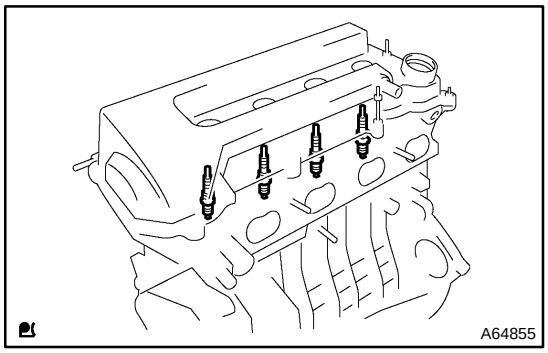

74. INSTALL SPARK PLUG

(a) Using a spark plug wrench, install the spark plugs.
Torque: 25 N·m (255 kgf·cm, 18 ft·lbf)

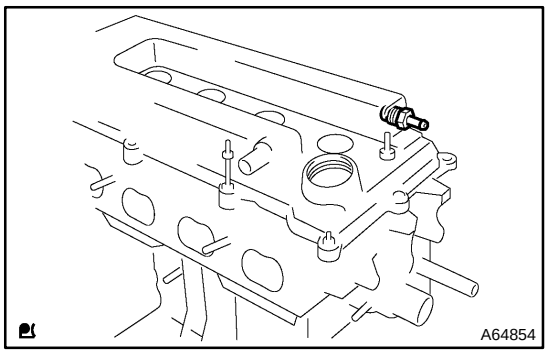

75. INSTALL VENTILATION VALVE SUB–ASSY

(a) Install the ventilation valve to the cylinder head cover.
Torque: 30 N·m (306 kgf·cm, 22 ft·lbf)

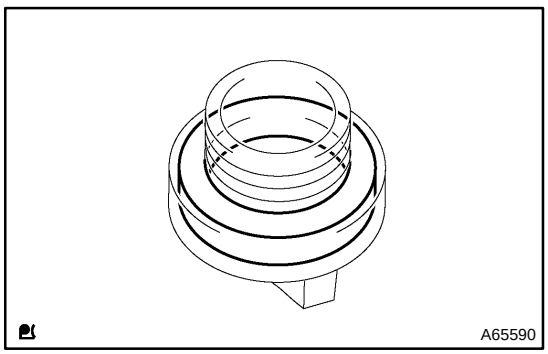

76. INSTALL OIL FILLER CAP GASKET

(a) Install the gasket to the oil filler cap.

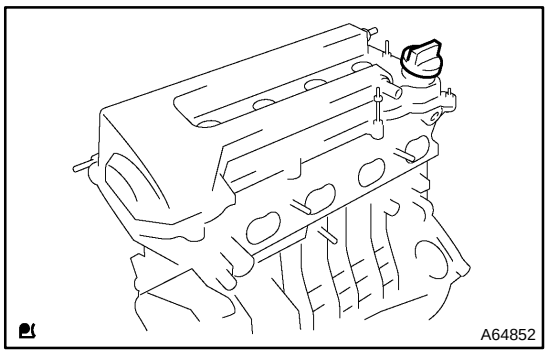

77. INSTALL OIL FILLER CAP SUB–ASSY

(a) Install the oil filler cap to the cylinder head cover.

141GS–01

REPLACEMENT

1. **WORK FOR PREVENTING GASOLINE FROM SPILLING OUT (See page 11–1)**
2. **REMOVE FRONT WHEELS**
3. **REMOVE ENGINE UNDER COVER RH**
4. **REMOVE ENGINE UNDER COVER LH**
5. **DRAIN COOLANT (See page 16–7)**

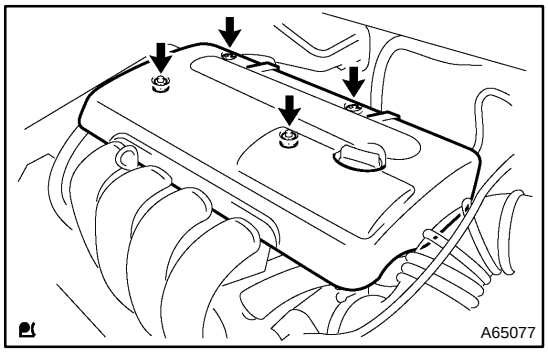

6. **REMOVE CYLINDER HEAD COVER NO.2**

(a) Remove the 2 nuts, 2 clips and cylinder head cover.

7. **DISCONNECT RADIATOR HOSE INLET**

(a) Disconnect the radiator hose inlet from the radiator.

8. **DISCONNECT RADIATOR HOSE OUTLET**

(a) Disconnect the radiator hose outlet from the radiator.

9. **DISCONNECT OIL COOLER INLET TUBE NO.1 (A/T TRANSAXLE)**

(a) Disconnect the oil cooler inlet tube from the radiator.

10. **DISCONNECT OIL COOLER OUTLET TUBE NO.1 (A/T TRANSAXLE)**

(a) Disconnect the oil cooler outlet tube from the radiator.

11. **REMOVE RADIATOR SUPPORT UPPER (W/ AIR CONDITIONING)**

(a) Remove the 2 bolts and 2 radiator support upper.

12. **REMOVE RADIATOR ASSY (W/ AIR CONDITIONING)**

(a) Disconnect the connector and harness clamp, and remove the radiator.

13. **REMOVE BATTERY**

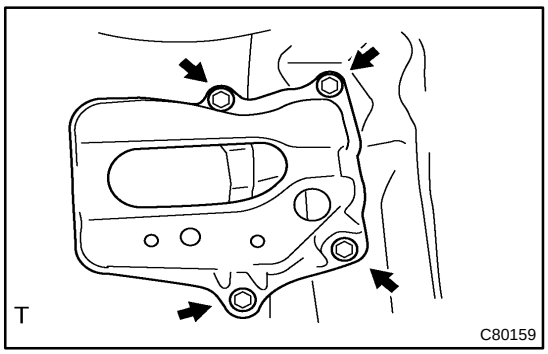

14. **REMOVE BATTERY CARRIER**

(a) Remove the 4 bolts and battery carrier.

15. **REMOVE AIR CLEANER ASSEMBLY WITH HOSE**

(a) Disconnect the mass air flow sensor connector.

(b) Disconnect the VSV connector.

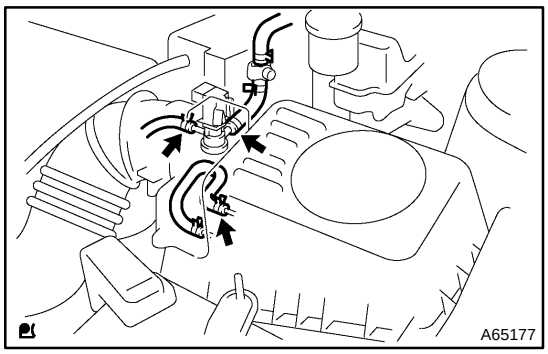

(c) Disconnect the 3 vacuum hoses, as shown in the illustration.
(d) Loosen the air cleaner hose clamp and disconnect the air cleaner hose.
(e) Remove the air cleaner cap.
(f) Remove the air cleaner filter element.

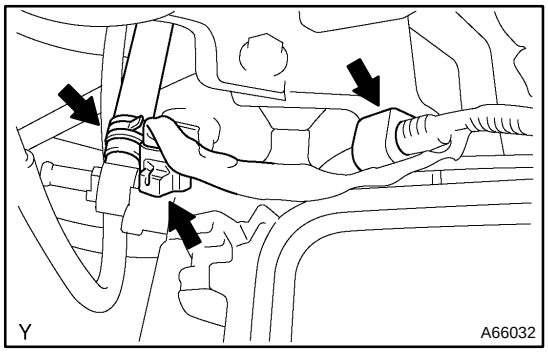

(g) Disconnect the wire harness clamp, connector and hose.
(h) Remove the 3 bolts and air cleaner case.

16. REMOVE EFI FUEL PIPE CLAMP (See page 11–10)

17. DISCONNECT FUEL TUBE SUB–ASSY (See page 11–10)

18. SEPARATE ACCELERATOR CONTROL CABLE ASSY

(a) Loosen the nut, then remove the accelerator control cable.

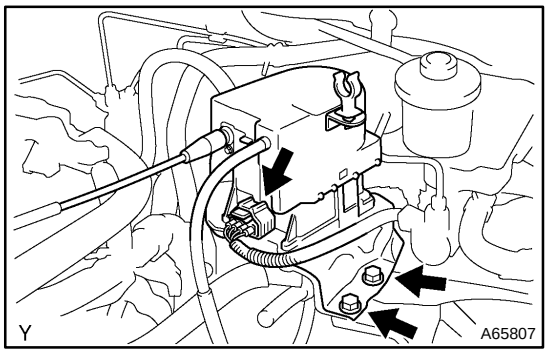

19. SEPARATE CRUISE CONTROL ACTUATOR ASSY (W/ CRUISE CONTROL)

(a) Disconnect the actuator connector.
(b) Remove the 2 bolts, then separate the actuator from the body.

20. DISCONNECT UNION TO CONNECTOR TUBE HOSE

(a) Disconnect the union to connector tube hose from the brake booster.

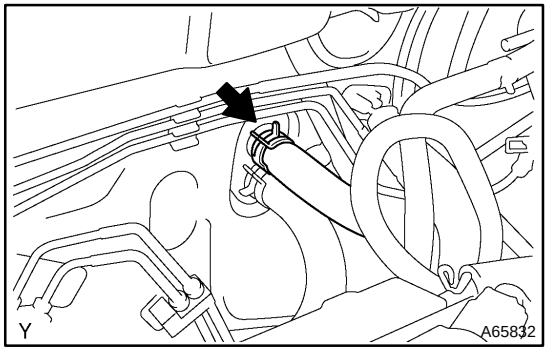

21. DISCONNECT HEATER INLET WATER HOSE

(a) Disconnect the heater inlet water hose from the air conditioner tube.

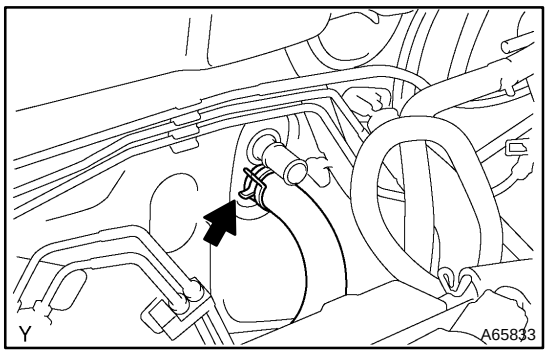

22. DISCONNECT HEATER OUTLET WATER HOSE

(a) Disconnect the heater outlet water hose from the air conditioner tube.

23. SEPARATE FLOOR SHIFT CABLE TRANSMISSION CONTROL SELECT (M/T TRANSAXLE) (See page 41–17)

24. SEPARATE FLOOR SHIFT CABLE TRANSMISSION CONTROL SHIFT (M/T TRANSAXLE) (See page 41–17)

25. SEPARATE FLOOR SHIFT CABLE TRANSMISSION CONTROL SHIFT (A/T TRANSAXLE) (See page 40–9)

26. SEPARATE CLUTCH RELEASE CYLINDER ASSY (M/T TRANSAXLE) (See page 41–17)

27. REMOVE GLOVE COMPARTMENT DOOR ASSY (See page 71–10)

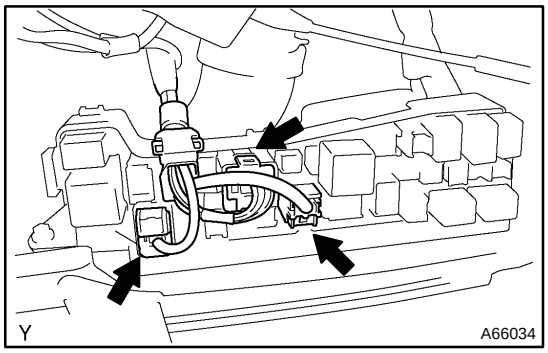

28. DISCONNECT ENGINE WIRE

(a) Disconnect the engine wire from the ECM and junction block.

(b) Pull out the engine wire.

(c) Remove the engine room relay block cover.

(d) Disconnect the engine wire from the engine room relay block.

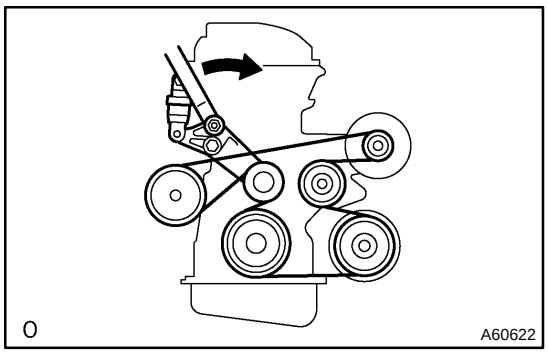

29. REMOVE FAN AND GENERATOR V BELT

(a) Slowly turn the V–ribbed belt tensioner clockwise, then remove the V belt.

30. SEPARATE COMPRESSOR AND MAGNETIC CLUTCH (W/ AIR CONDITIONING) (See page 55–34)

HINT:

Hang up the hoses instead of detaching.

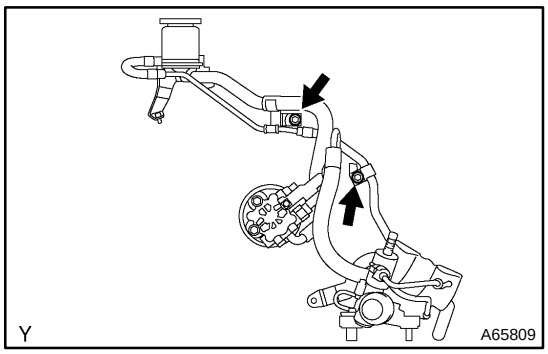

31. SEPARATE RETURN TUBE SUB–ASSY

(a) Separate the vane pump oil reservoir from the oil reservoir bracket.

(b) Remove the 2 bolts installing the return tube.

32. REMOVE FRONT DOOR SCUFF PLATE RH (See page 76–21)

33. REMOVE COWL SIDE TRIM BOARD RH (See page 71–10)

34. REMOVE COLUMN HOLE COVER SILENCER SHEET

(a) Remove the 2 clips and column hole cover silencer sheet.

35. SEPARATE STEERING INTERMEDIATE SHAFT (See page 51–18)

36. REMOVE FLOOR PANEL BRACE FRONT

(a) Remove the 2 nuts and floor panel brace front.

37. REMOVE EXHAUST PIPE ASSY FRONT (See page 15–2)

38. REMOVE FRONT AXLE HUB LH NUT (See page 30–6)

SST 09930–00010

39. REMOVE FRONT AXLE HUB RH NUT (See page 30–6)

SST 09930–00010

40. SEPARATE TIE ROD END SUB–ASSY LH (See page 30–6)

SST 09628–62011

41. SEPARATE TIE ROD END SUB–ASSY RH (See page 30–6)

SST 09628–62011

42. SEPARATE FRONT STABILIZER LINK ASSY LH (See page 51–18)

43. SEPARATE FRONT STABILIZER LINK ASSY RH (See page 51–18)

44. SEPARATE FRONT SUSPENSION ARM SUB–ASSY LOWER NO.1 LH (See page 30–6)

45. SEPARATE FRONT SUSPENSION ARM SUB–ASSY LOWER NO.1 RH (See page 30–6)

46. SEPARATE FRONT AXLE ASSY LH (See page 30–6)

47. SEPARATE FRONT AXLE ASSY RH (See page 30–6)

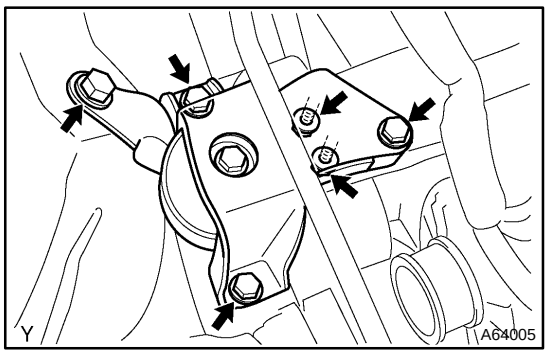

48. REMOVE ENGINE ASSEMBLY WITH TRANSAXLE

(a) Set the engine lifter.

(b) Remove the 4 bolts, 2 nuts and engine mounting insulator.

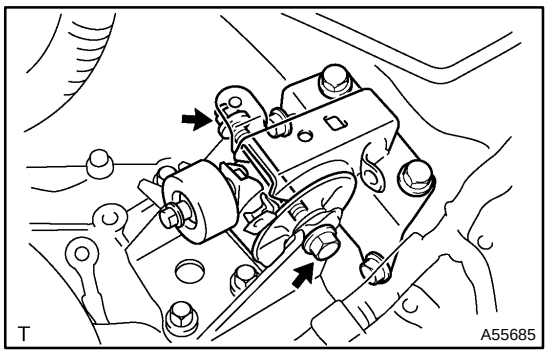

(c) Remove the through bolt and nut, then detach the engine mounting insulator from the vehicle.

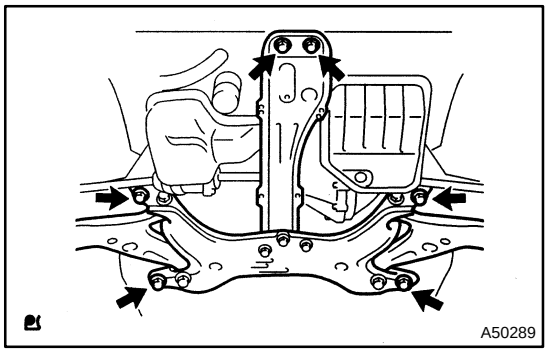

(d) Remove the 6 bolts, as shown in the illustration.
(e) Carefully, remove the engine with transaxle from the vehicle.

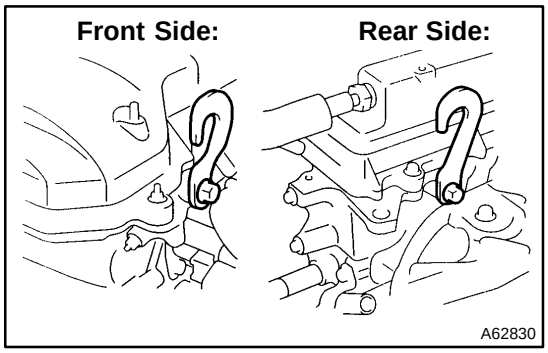

(f) Install the 2 engine hangers with the 2 bolts.
Part No.:
12281–15040 for No. 1 engine hanger
12281–22021 for No. 2 engine hanger
91512–B1016 for bolt
Torque: 38 N·m (387 kgf·cm, 28 ft·lbf)

HINT:
Be sure to install the engine hanger (12281–22021) to the front side of the engine and the engine hanger (12281–15040) to the rear side.

(g) Using the chain block and engine sling device, hang the engine assembly.

49. SEPARATE VANE PUMP ASSY (See page 51–8)

NOTICE:
Do not disconnect the hose.

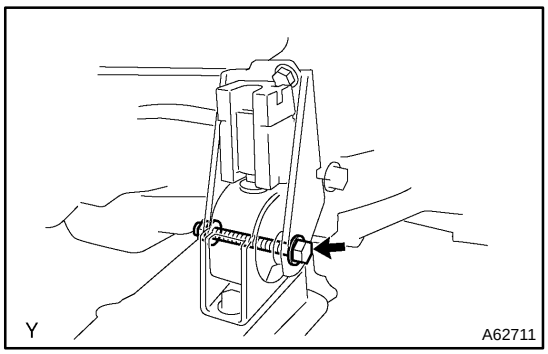

50. REMOVE FRONT SUSPENSION CROSSMEMBER W/CENTER MEMBER

(a) Remove the through bolt and nut, then detach the engine mounting insulator FR from the engine mounting bracket.

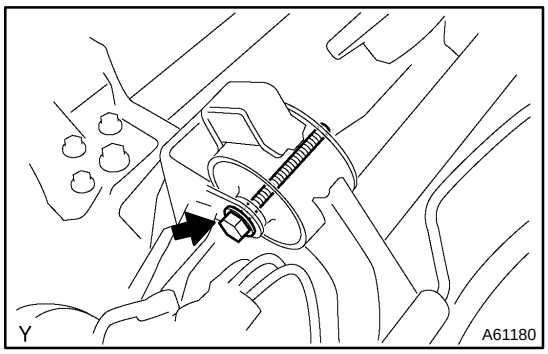

(b) Remove the through bolt, then detach the engine mounting insulator RR from the suspension crossmember.
(c) Separate the engine and transaxle assembly from the suspension crossmember and engine mounting member.

51. REMOVE STARTER ASSY (See page 19–4)
52. REMOVE MANUAL TRANSAXLE ASSY (M/T TRANSAXLE) (See page 41–17)
53. REMOVE AUTOMATIC TRANSAXLE ASSY (A/T TRANSAXLE) (See page 40–9)
54. REMOVE CLUTCH COVER ASSY (M/T TRANSAXLE) (See page 42–18)
55. REMOVE CLUTCH DISC ASSY (M/T TRANSAXLE) (See page 42–18)

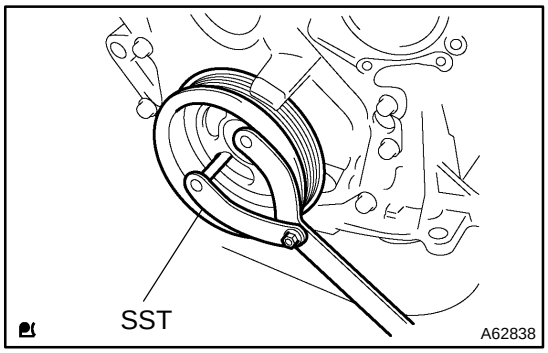

56. REMOVE FLYWHEEL SUB–ASSY (M/T TRANSAXLE)
(a) Fix the crankshaft with SST, then remove the 8 bolts and flywheel.
SST 09960–10010 (09962–01000, 09963–01000)

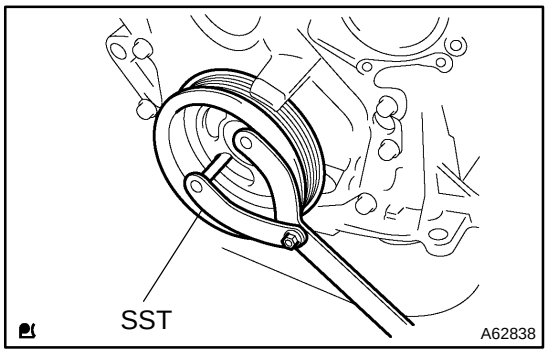

57. REMOVE DRIVE PLATE & RING GEAR SUB–ASSY (A/T TRANSAXLE)
(a) Fix the crankshaft with SST, then remove the 8 bolts and drive plate & ring gear.
SST 09960–10010 (09962–01000, 09963–01000)

58. REMOVE GENERATOR ASSY (See page 19–16)

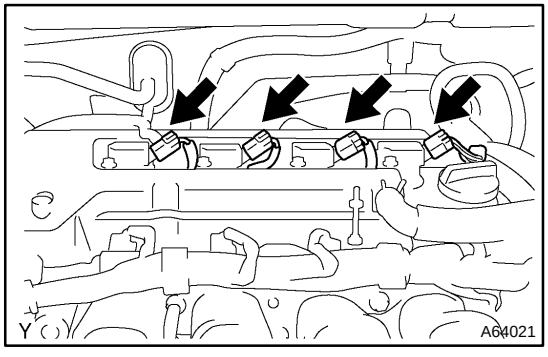

59. REMOVE IGNITION COIL ASSY
(a) Disconnect the 4 ignition coil connectors.

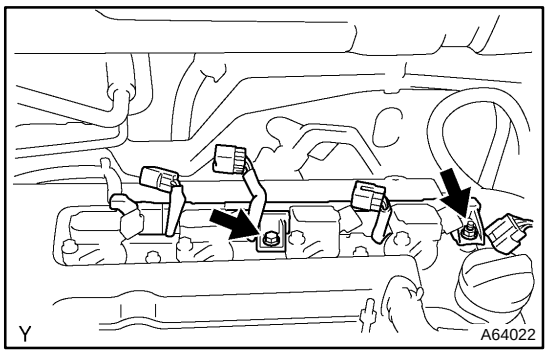

(b) Remove the bolt and nut installing the engine wire.

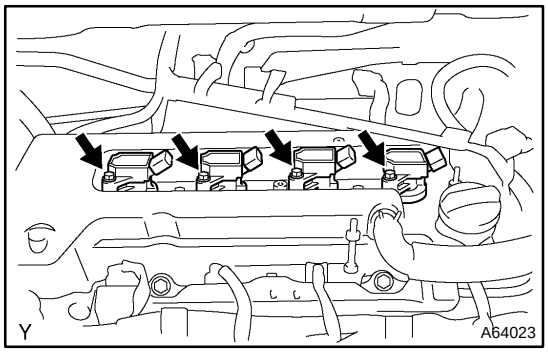

(c) Remove the 4 bolts and 4 ignition coils.

60. REMOVE FUEL DELIVERY PIPE SUB–ASSY (See page 11–10)

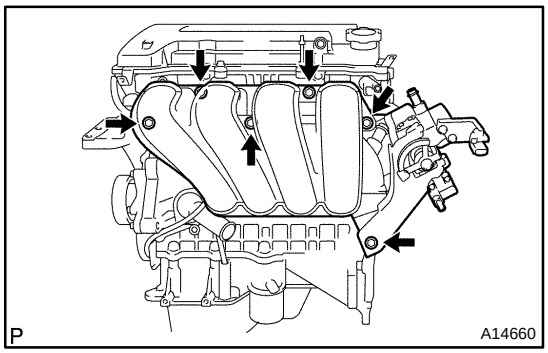

61. REMOVE INTAKE MANIFOLD

(a) Disconnect the 2 water hoses from the throttle body.
(b) Disconnect the 2 vacuum hoses from the intake manifold.
(c) Remove the 4 bolts, 2 nut, 2 wire brackets, intake manifold and throttle body assembly.
(d) Remove the gasket from the intake manifold and throttle body assembly.

62. REMOVE OIL LEVEL GAGE SUB–ASSY

(a) Remove the oil level gage from the oil level gage guide.

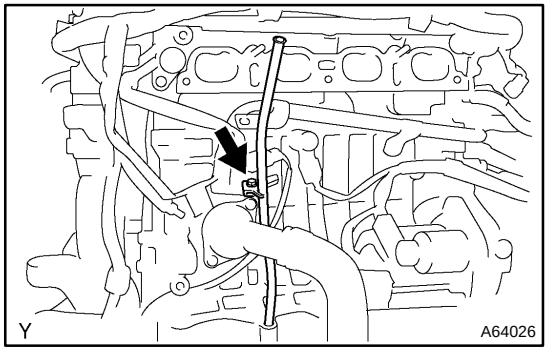

63. REMOVE OIL LEVEL GAGE GUIDE

(a) Remove the bolt and oil level gage guide.

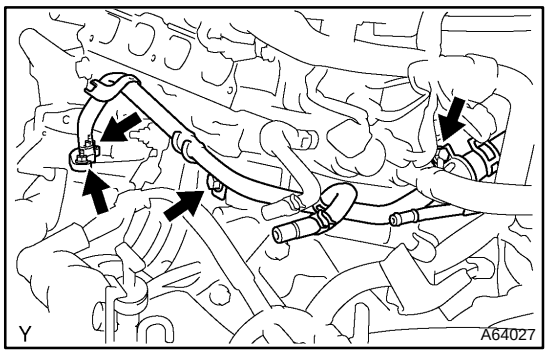

64. REMOVE WATER BY–PASS PIPE NO.1

(a) Remove the 2 bolts, 2 nuts, water by–pass pipe and gasket.

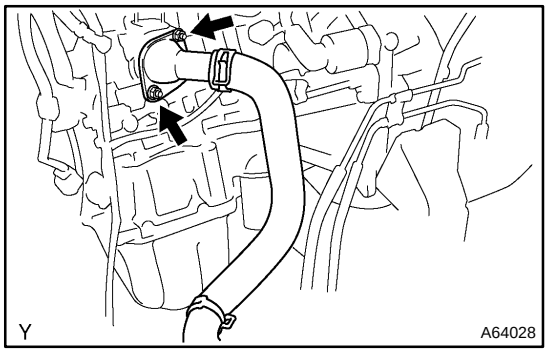

65. REMOVE WATER INLET

(a) Remove the 2 nuts and water inlet.

66. REMOVE THERMOSTAT

67. REMOVE ENGINE OIL PRESSURE SWITCH ASSY (See page 17–1)

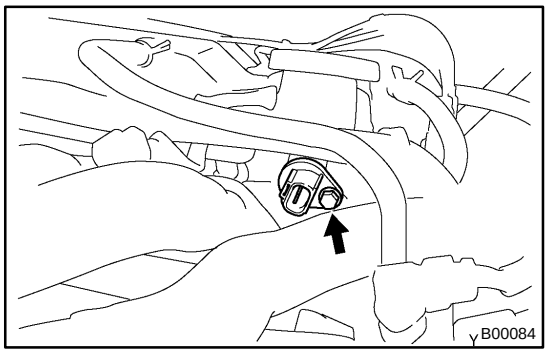

68. REMOVE CAMSHAFT POSITION SENSOR

(a) Remove the bolt and camshaft position sensor.

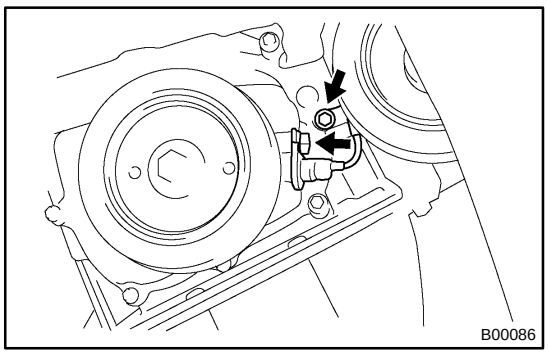

69. REMOVE CRANKSHAFT POSITION SENSOR

(a) Remove the 2 bolts and crankshaft position sensor.

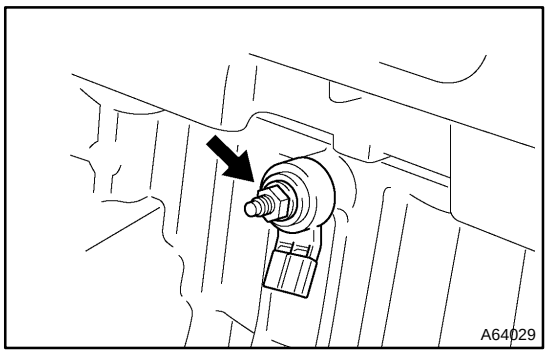

70. REMOVE KNOCK SENSOR

(a) Remove the nut and knock sensor.

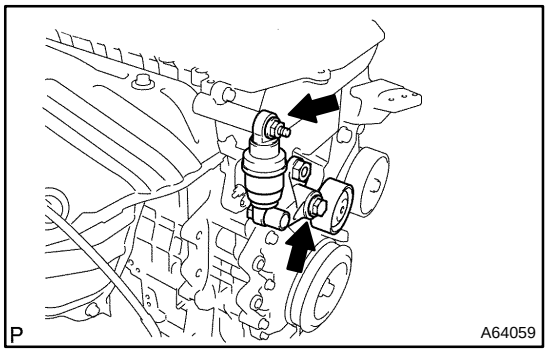

71. REMOVE V–RIBBED BELT TENSIONER ASSY

(a) Remove the bolts, nut and V–ribbed belt tensioner.

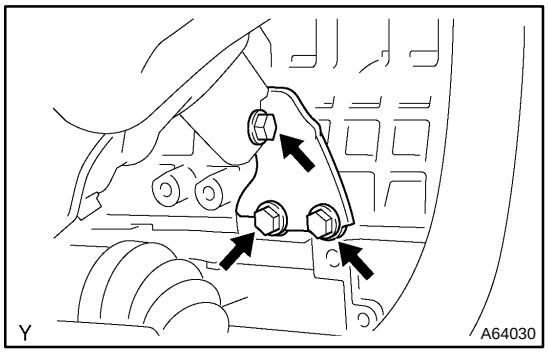

72. REMOVE MANIFOLD STAY

(a) Remove the 3 bolts and manifold stay.

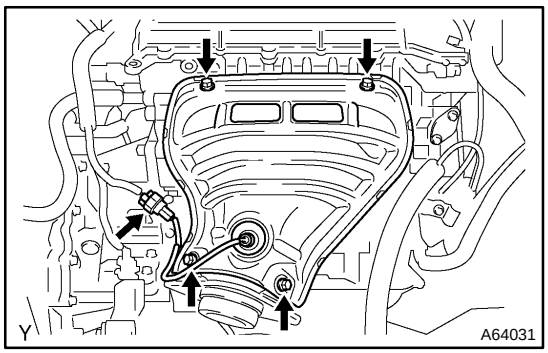

73. REMOVE EXHAUST MANIFOLD HEAT INSULATOR NO.1

(a) Remove the 4 bolts and exhaust manifold heat insulator.

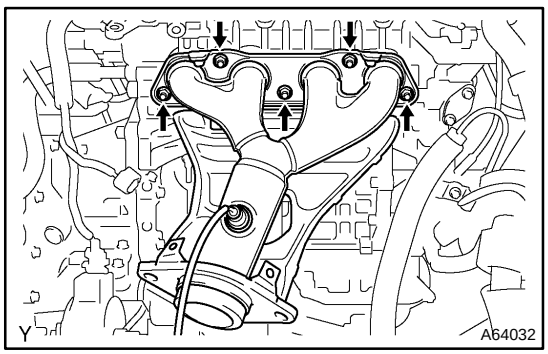

74. REMOVE EXHAUST MANIFOLD

(a) Remove the 5 nuts, exhaust manifold and gasket.

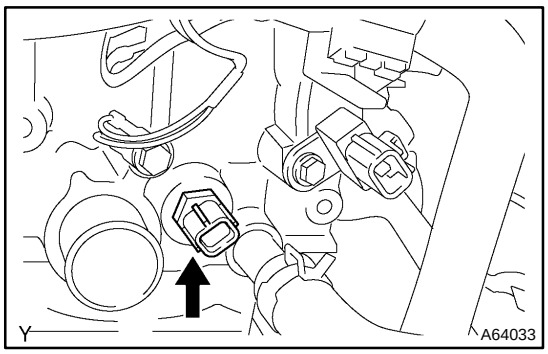

75. REMOVE ENGINE COOLANT TEMPERATURE SENSOR

(a) Using SST, remove the engine coolant temperature sensor.
SST 09817–33190

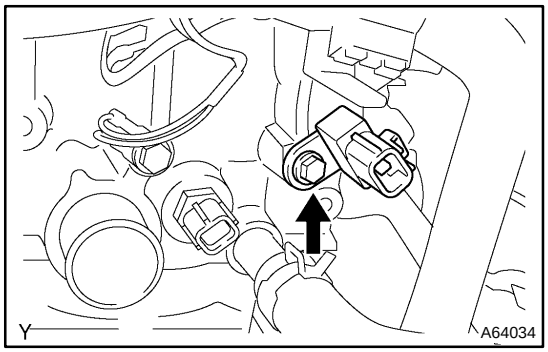

76. REMOVE RADIO SETTING CONDENSER

(a) Remove the bolt and condenser.

77. REMOVE WATER BY–PASS HOSE NO.2

78. REMOVE RADIATOR HOSE INLET

79. REMOVE HEATER INLET WATER HOSE

80. REPLACE PARTIAL ENGINE ASSY

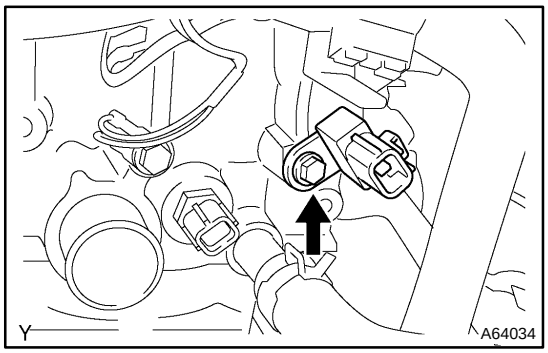

81. INSTALL RADIO SETTING CONDENSER

(a) Install the condenser with the bolt.
Torque: 10 N·m (102 kgf·cm, 7 ft·lbf)

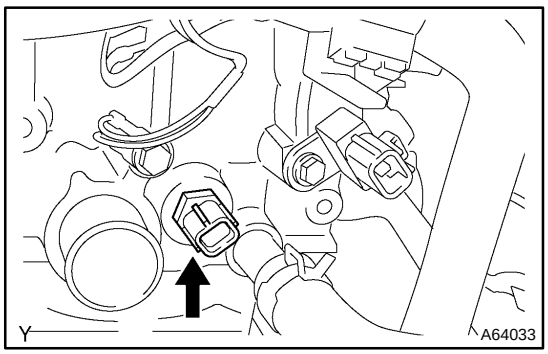

82. INSTALL ENGINE COOLANT TEMPERATURE SENSOR

(a) Install a new gasket to the engine coolant temperature sensor.

(b) Using SST, install the engine coolant temperature sensor.
SST 09817–33190
Torque: 20 N·m (204 kgf·cm, 15 ft·lbf)

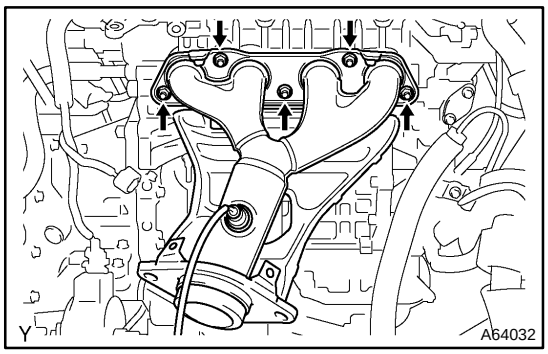

83. INSTALL EXHAUST MANIFOLD

(a) Install a new gasket and the exhaust manifold with the 5 nuts.
Torque: 37 N·m (377 kgf·cm, 27 ft·lbf)

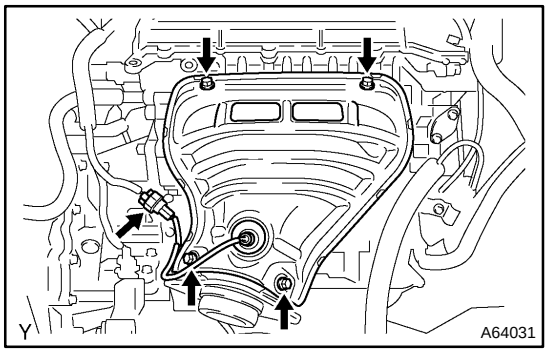

84. INSTALL EXHAUST MANIFOLD HEAT INSULATOR NO.1

(a) Install the exhaust manifold heat insulator with the 4 bolts.
Torque: 18 N·m (184 kgf·cm, 13 ft·lbf)

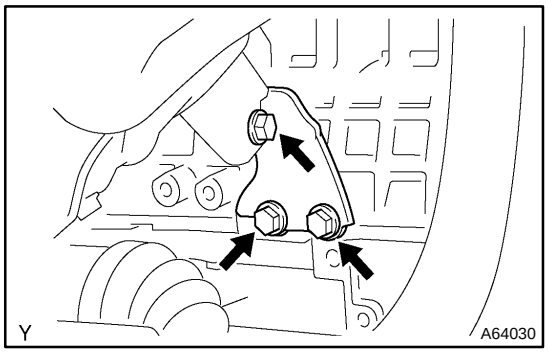

85. INSTALL MANIFOLD STAY

(a) Install the manifold stay with the 3 bolts.
Torque: 49 N·m (500 kgf·cm, 36 ft·lbf)

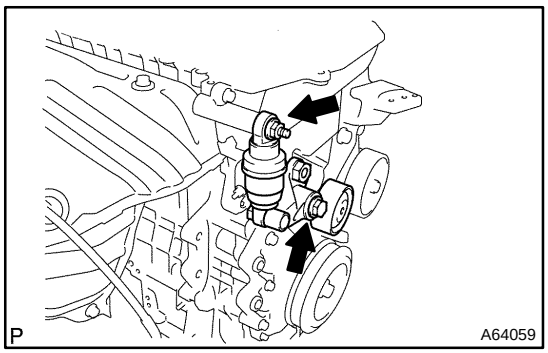

86. INSTALL V–RIBBED BELT TENSIONER ASSY

(a) Install the V–ribbed belt tensioner with the bolt and nut.
Torque:
29 N·m (296 kgf·cm, 21 ft·lbf) for nut
69 N·m (704 kgf·cm, 51 ft·lbf) for bolt

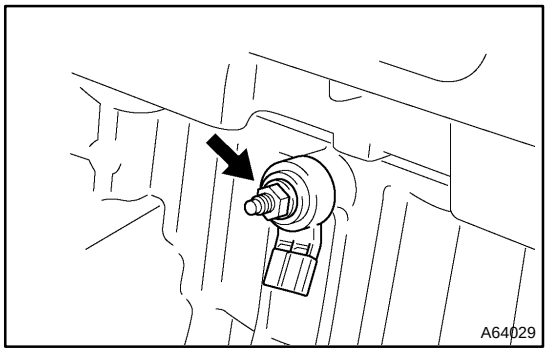

87. INSTALL KNOCK SENSOR

(a) Install the knock sensor with the nut.
Torque: 20 N·m (204 kgf·cm, 15 ft·lbf)

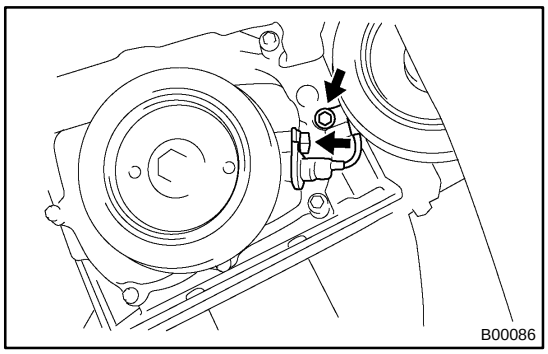

88. INSTALL CRANKSHAFT POSITION SENSOR

(a) Install the crankshaft position sensor with the 2 bolts.
Torque: 9.0 N·m (92 kgf·cm, 80 in.·lbf)

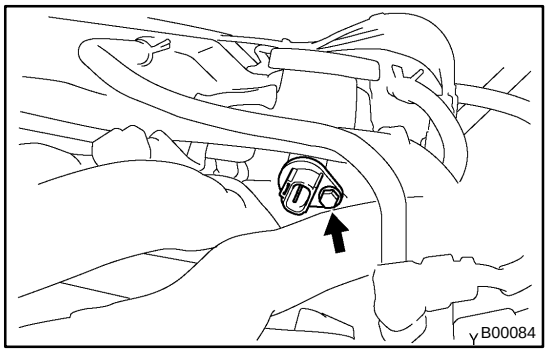

89. INSTALL CAMSHAFT POSITION SENSOR

(a) Install the camshaft position sensor with the bolt.
Torque: 9.0 N·m (92 kgf·cm, 80 in.·lbf)

90. INSTALL ENGINE OIL PRESSURE SWITCH ASSY (See page 17–1)

91. INSTALL THERMOSTAT (See page 16–11)

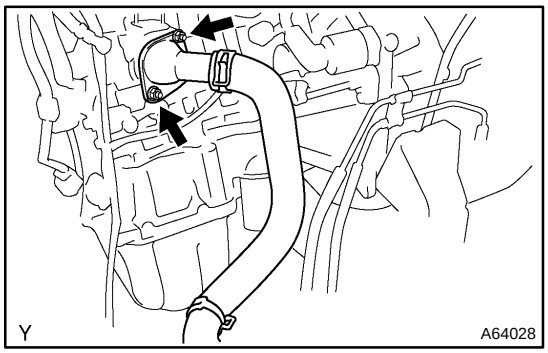

92. INSTALL WATER INLET

(a) Install the water inlet with the 2 nuts.
Torque: 11 N·m (112 kgf·cm, 8 ft·lbf)

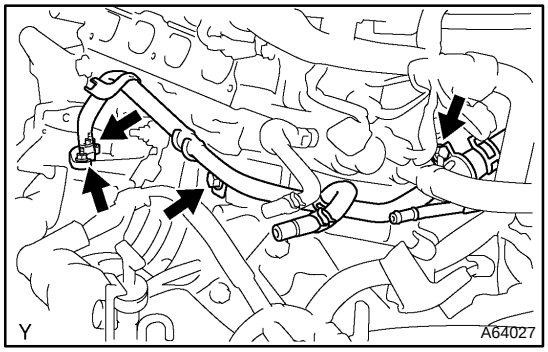

93. INSTALL WATER BY–PASS PIPE NO.1

(a) Install a new gasket and water by–pass with the 2 nuts and 2 bolts.
Torque: 9.0 N·m (92 kgf·cm, 80 in.·lbf)

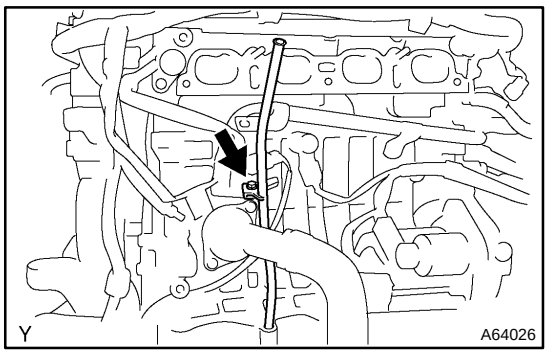

94. INSTALL OIL LEVEL GAGE GUIDE

(a) Apply a light coat of a new O–ring, then install it to the oil level gage guide.

(b) Install the oil level gage guide with the bolt.
Torque: 13 N·m (133 kgf·cm, 10 ft·lbf)

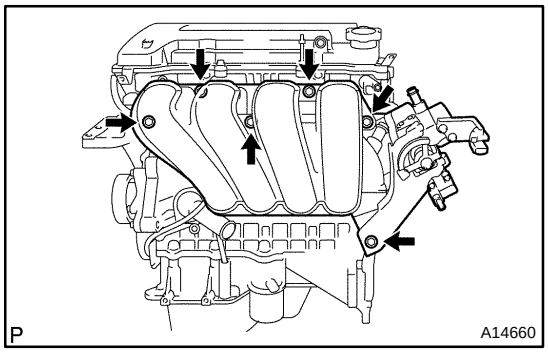

95. INSTALL INTAKE MANIFOLD

(a) Install a new gasket to the intake manifold.

(b) Install the intake manifold and throttle body assembly with the 2 brackets, 4 bolts and 2 nuts. Uniformly tighten the bolts and nuts in several passes.
Torque: 30 N·m (306 kgf·cm, 22 ft·lbf)

(c) Connect the 2 vacuum hoses to the intake manifold.

(d) Connect the 2 water hoses to the throttle body.

96. INSTALL FUEL DELIVERY PIPE SUB–ASSY(See page 11–10)

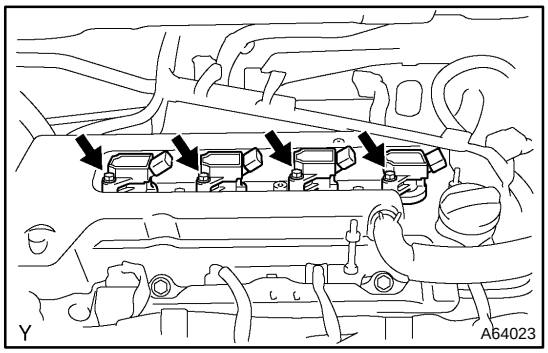

97. INSTALL IGNITION COIL ASSY

(a) Install the 4 ignition coils with the 4 bolts.
Torque: 9.0 N·m (92 kgf·cm, 80 in.·lbf)

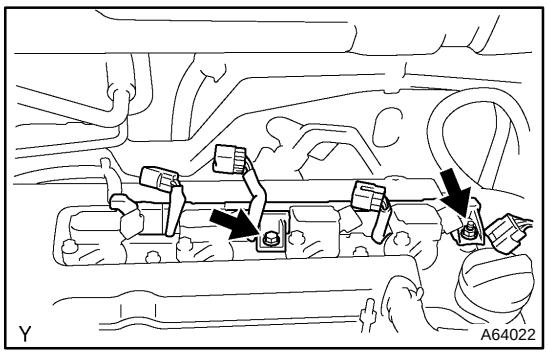

(b) Install the engine wire with the bolt and nut.
Torque: 9.0 N·m (92 kgf·cm, 80 in.·lbf)

98. INSTALL GENERATOR ASSY (See page 19–16)

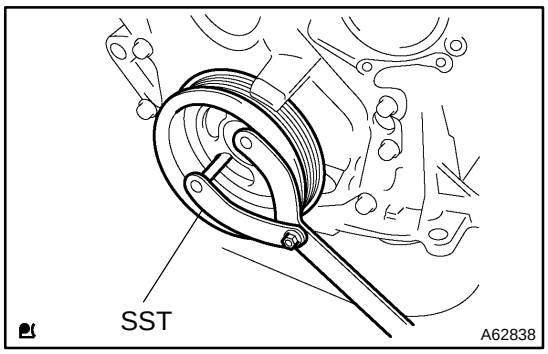

99. INSTALL FLYWHEEL SUB–ASSY (M/T TRANSAXLE)

(a) Fix the crankshaft with SST.
SST 09960–10010 (09962–01000, 09963–01000)

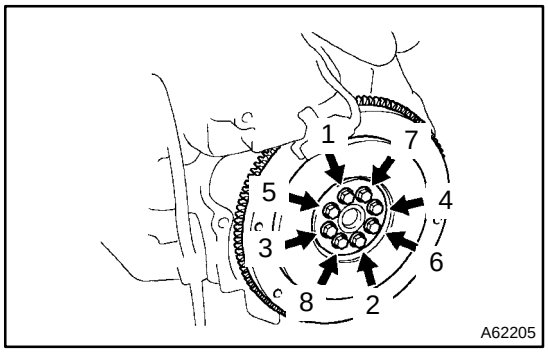

(b) Clean the bolt and bolt hole.
(c) Apply adhesive to the bolts.
Adhesive:
Part No. 09330–00070, THREE BOND or equivalent
(d) Install and uniformly tighten the 8 bolts, in several passes, in the sequence shown.
Torque: 49 N·m (500 kgf·cm, 36 ft·lbf)

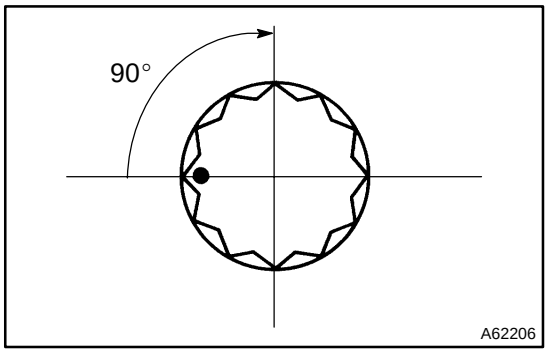

(e) Mark the bolts with paint.
(f) Retighten the bolts by an additional 90°.
(g) Check that the point marked bolts are moved by 90° angle.

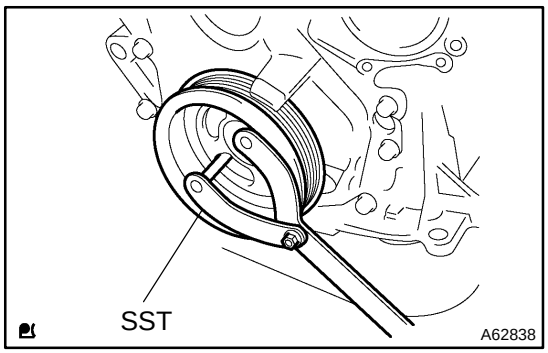

100. INSTALL DRIVE PLATE & RING GEAR SUB–ASSY (A/T TRANSAXLE)

(a) Fix the crankshaft with SST.
SST 09960–10010 (09962–01000, 09963–01000)

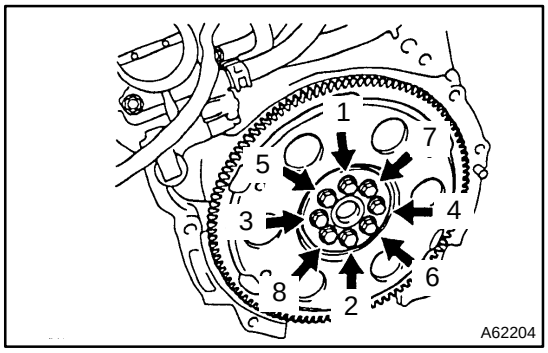

(b) Clean the bolt and bolt hole.
(c) Apply adhesive to the bolts.
Adhesive:
Part No. 09330–00070, THREE BOND or equivalent
(d) Install and uniformly tighten the 8 bolts, in several passes, in the sequence shown.
Torque: 88 N·m (897 kgf·cm, 65 ft·lbf)

101. INSTALL CLUTCH DISC ASSY (M/T TRANSAXLE) (See page 42–18)
SST 09301–00210

102. INSTALL CLUTCH COVER ASSY (M/T TRANSAXLE) (See page 42–18)
SST 09301–00210

103. INSTALL MANUAL TRANSAXLE ASSY (M/T TRANSAXLE) (See page 41–17)

104. INSTALL AUTOMATIC TRANSAXLE ASSY (A/T TRANSAXLE) (See page 40–9)

105. INSTALL STARTER ASSY (See page 19–4)

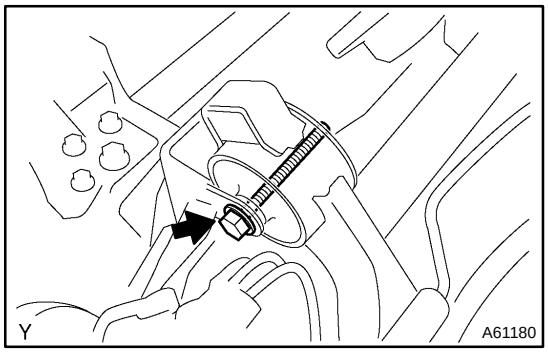

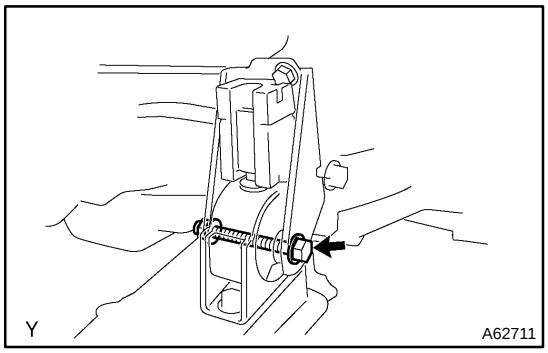

106. INSTALL FRONT SUSPENSION CROSSMEMBER W/CENTER MEMBER

(a) Attach the engine and transaxle assembly to the suspension crossmember and engine mounting member.

(b) Install the bolt holding the rear engine mounting bracket to the mounting insulator.
TMMC, NUMMI made:
Torque: 65 N·m (663 kgf·cm, 48 ft·lbf)
TAKAOKA, TAL made:
Torque: 87 N·m (887 kgf·cm, 64 ft·lbf)

(c) Install the bolt holding the front engine mounting bracket to the mounting insulator.
Torque: 52 N·m (530 kgf·cm, 38 ft·lbf)

107. INSTALL VANE PUMP ASSY (See page 51–8)

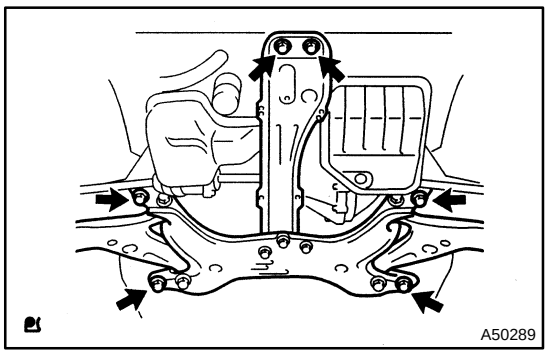

108. INSTALL ENGINE ASSEMBLY WITH TRANSAXLE

(a) Set the engine with transaxle on the engine lifter.

(b) Install the engine with transaxle to the vehicle.

(c) Temporarily, install the suspension crossmember and 6 bolts.

(d) Install the engine mounting insulator LH.
Torque: 80 N·m (816 kgf·cm, 59 ft·lbf)

(e) Install the engine mounting insulator RH.
Torque: 52 N·m (530 kgf·cm, 38 ft·lbf)

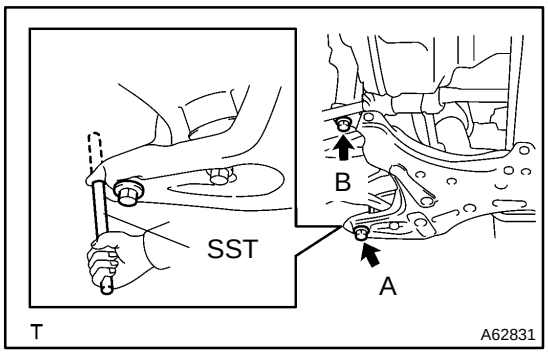

(f) Insert SST to the positioning holes on the right handle crossmember and on the right–handle of the vehicle.
SST 09670–00010

(g) Temporarily tighten the bolt A first, then bolt B.

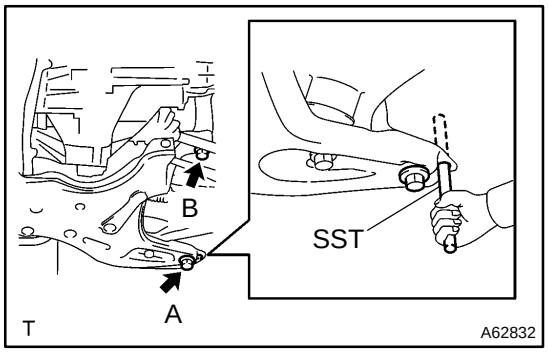

(h) Insert SST to the positioning holes on the left handle crossmember and on the left–handle of the vehicle.
SST 09670–00010

(i) Temporarily tighten the bolt A first, then bolt B.

(j) Insert SST to the positioning holes on the right–handle crossmember and right–handle of the vehicle, then tighten the bolts with the specified torque.

(k) Insert SST to the positioning holes on the right–handle crossmember and left–handle of the vehicle, then tighten the bolts with the specified torque.
SST 09670–00010
Torque:
157 N·m (1,601 kgf·cm, 116 ft·lbf) for bolt A
113 N·m (1,152 kgf·cm, 83 ft·lbf) for bolt B

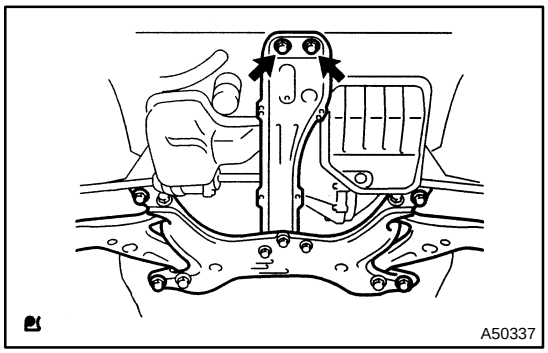

(l) Tighten the 2 bolts, as shown in the illustration.
Torque: 39 N·m (398 kgf·cm, 29 ft·lbf)

NOTICE:
After installing the crossmember, check that the positioning holes on the crossmember and vehicle are aligned with each other.

109. INSTALL FRONT SUSPENSION ARM SUB–ASSY LOWER NO.1 LH (See page 30–6)
110. INSTALL FRONT SUSPENSION ARM SUB–ASSY LOWER NO.1 RH (See page 30–6)
111. INSTALL FRONT STABILIZER LINK ASSY LH (See page 51–18)
112. INSTALL FRONT STABILIZER LINK ASSY RH (See page 51–18)
113. INSTALL TIE ROD END SUB–ASSY LH (See page 30–6)
114. INSTALL TIE ROD END SUB–ASSY RH (See page 30–6)
115. INSTALL FRONT AXLE HUB LH NUT (See page 30–6)
116. INSTALL FRONT AXLE HUB RH NUT (See page 30–6)
117. INSTALL EXHAUST PIPE ASSY FRONT (See page 15–2)
118. INSTALL FLOOR PANEL BRACE FRONT
(a) Install the front floor panel brace with the 2 nuts.
Torque: 30 N·m (306 kgf·cm, 22 ft·lbf)
119. INSTALL STEERING INTERMEDIATE SHAFT (See page 51–18)

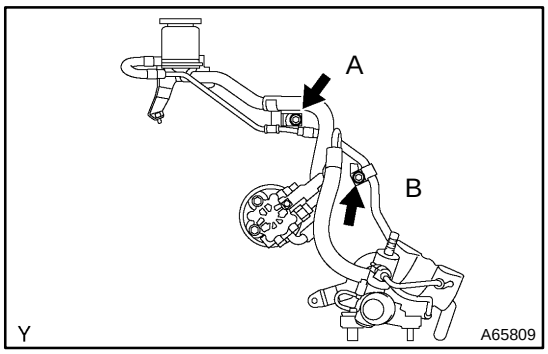

120. INSTALL RETURN TUBE SUB–ASSY

(a) Install the return tube with 2 bolts.
Torque:
5.0 N·m (51 kgf·cm, 44 in.·lbf) for bolt A
7.8 N·m (80 kgf·cm, 69 in.·lbf) for bolt B

121. INSTALL COMPRESSOR AND MAGNETIC CLUTCH (W/ AIR CONDITIONING) (See page 55–34)

122. INSTALL CLUTCH RELEASE CYLINDER ASSY (M/T TRANSAXLE) (See page 41–17)

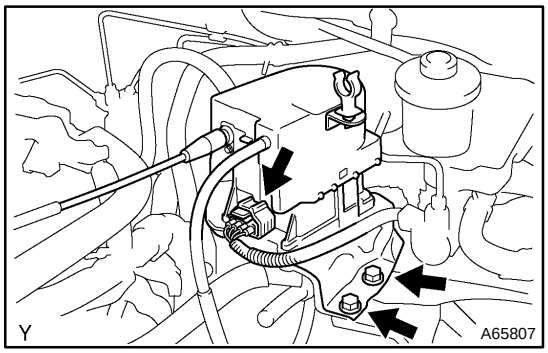

123. INSTALL CRUISE CONTROL ACTUATOR ASSY (W/ CRUISE CONTROL)

(a) Install the actuator with the 2 bolts.
Torque: 6.0 N·m (61 kgf·cm, 53 in.·lbf)

(b) Connect the actuator connector.

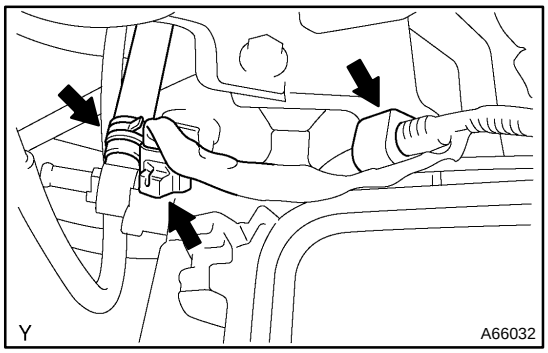

124. INSTALL AIR CLEANER ASSEMBLY WITH HOSE

(a) Install the air cleaner case with the 3 bolts.
Torque: 7.0 N·m (71 kgf·cm, 62 in.·lbf)

(b) Connect the wire harness clamp, connector and hose.

(c) Install the air cleaner filter element.

(d) Install the air cleaner cap.

(e) Connect the air cleaner hose.

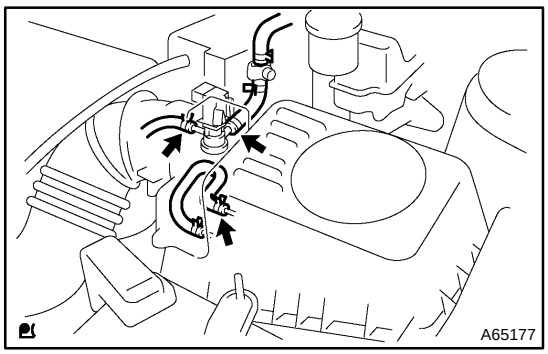

(f) Connect the 3 vacuum hoses, as shown in the illustration.

(g) Connect the VSV connector.

(h) Connect the intake air flow meter connector.

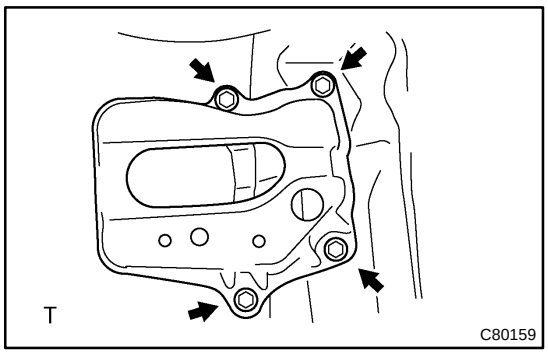

125. INSTALL BATTERY CARRIER

(a) Install the battery carrier with the 4 bolts.
Torque: 13 N·m (133 kgf·cm, 10 ft·lbf)

126. INSTALL BATTERY
Torque:
5.0 N·m (51 kgf·cm, 44 in.·lbf) for bolt
3.5 N·m (36 kgf·cm, 31 in.·lbf) for nut

127. INSTALL RADIATOR SUPPORT UPPER (W/ AIR CONDITIONING)

(a) Install the 2 radiator support uppers with the 2 bolts.
Torque: 19 N·m (194 kgf·cm, 14 ft·lbf)

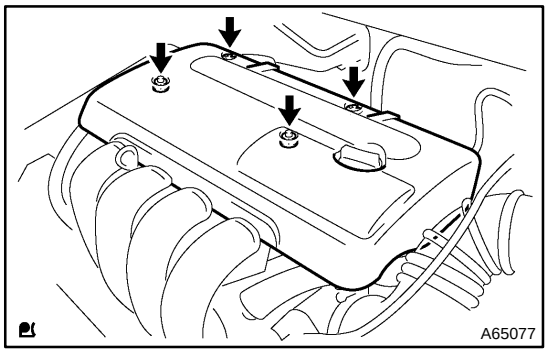

128. INSTALL CYLINDER HEAD COVER NO.2

(a) Install the cylinder head cover with the 2 nuts and 2 clips.
Torque: 7.0 N·m (71 kgf·cm, 62 in.·lbf)

129. INSTALL FRONT WHEELS
Torque: 103 N·m (1,050 kgf·cm, 76 ft·lbf)

130. ADD AUTOMATIC TRANSAXLE FLUID (A/T TRANSAXLE)

131. ADD ENGINE OIL

132. ADD COOLANT (See page 16–7)

133. CHECK FOR ENGINE OIL LEAKS

134. CHECK FOR ENGINE COOLANT LEAKS (See page 16–7)

135. CHECK FUEL LEAK

136. CHECK FOR EXHAUST GAS LEAKS

137. INSPECT CHECK IDLE SPEED AND IGNITION TIMING (See page 14–1)
SST 09843–18040

138. INSPECT CO/HC (See page 14–1)

139. INSPECT AND ADJUST FRONT WHEEL ALIGNMENT (See page 26–5)

140. CHECK ABS SPEED SENSOR SIGNAL (W/ ABS)

TIMING GEAR COVER OIL SEAL

140OM–01

REPLACEMENT

1. REMOVE ENGINE UNDER COVER RH

2. REMOVE FRONT WHEEL RH

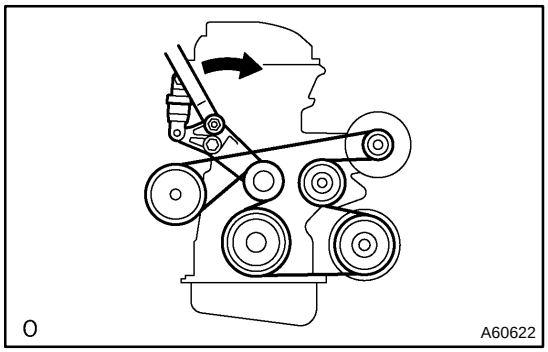

3. REMOVE FAN AND GENERATOR V BELT

(a) Turn the V–ribbed belt tensioner slowly clockwise and loosen it. Then, remove the fan and generator belt V and put back the V–ribbed belt tensioner little by little and fix it quietly.

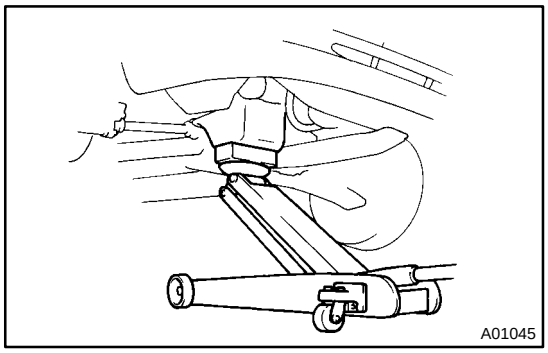

4. REMOVE ENGINE MOUNTING INSULATOR SUB–ASSY RH

(a) Remove the the PS oil pump reservoir and put it aside.

(b) Place a wooden block between the jack and engine, and set the jack. Then, remove the 4 bolts, the 2 nuts and engine mounting insulator RH.

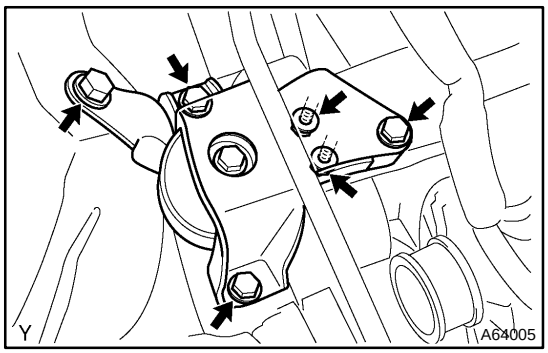

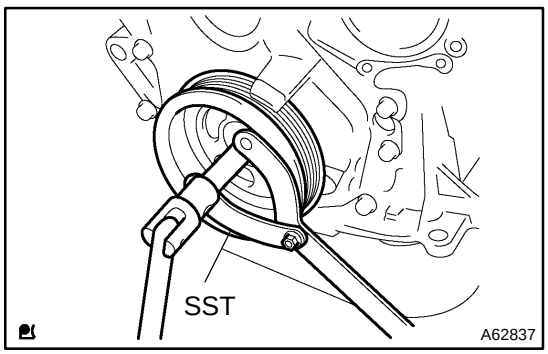

5. REMOVE CRANKSHAFT PULLEY

(a) Using SST, remove the crankshaft pulley bolt.
SST 09960–10010 (09962–01000, 09963–01000)

(b) Remove the crankshaft pulley from the crankshaft.

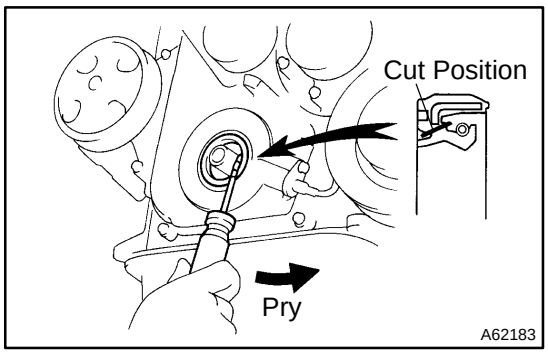

6. REMOVE TIMING GEAR COVER OIL SEAL

(a) Using a knife, cut off the oil seal lip.

(b) Using a screwdriver with taping its tip, pry out the oil seal.

NOTICE:

After the removal, check if the crankshaft is not damaged. If there is, mend it with a sandpaper (#400).

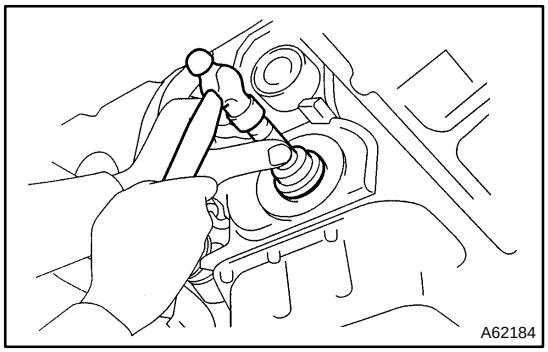

7. INSTALL TIMING GEAR COVER OIL SEAL

(a) Apply MP grease to a new oil seal lip.

NOTICE:

Keep the lip off foreign materials.

(b) Using SST, tap in the oil seal until its surface is flush with the timing chain cover edge.

SST 09223–22010

NOTICE:

Wipe off extra grease on the crankshaft.

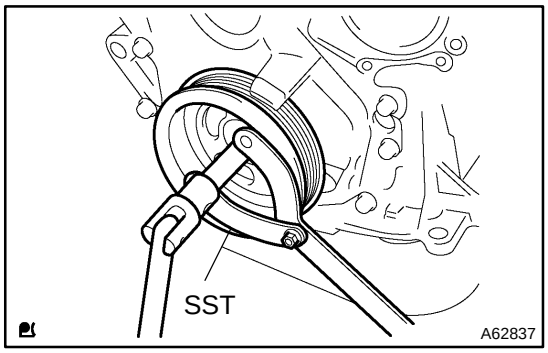

8. INSTALL CRANKSHAFT PULLEY

(a) Align the pulley set key with the key groove of the pulley, and slide on the pulley.

(b) Using SST, install the crankshaft pulley bolt.

SST 09960–10010 (09962–01000, 09963–01000)

Torque: 138 N·m (1,407 kgf·cm, 102 ft·lbf)

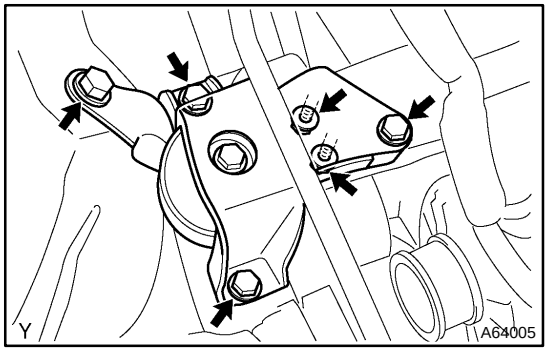

9. INSTALL ENGINE MOUNTING INSULATOR SUB–ASSY RH

(a) Install the engine mounting insulator RH with the 4 bolts and 2 nuts.

Torque: 52 N·m (530 kgf·cm, 38 ft·lbf)

10. INSTALL FRONT WHEEL RH

Torque: 103 N·m (1050 kgf·cm, 76 ft·lbf)

11. CHECK ENGINE OIL LEAK

VALVE CLEARANCE

ADJUSTMENT

140OE–01

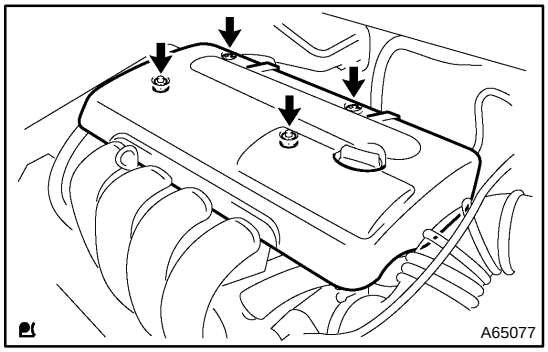

1. REMOVE CYLINDER HEAD COVER NO.2

(a) Remove the 2 nuts, 2 clips and cylinder head cover.

2. DISCONNECT ENGINE WIRE

(a) Remove the 5 clamps from the 5 clamp brackets.

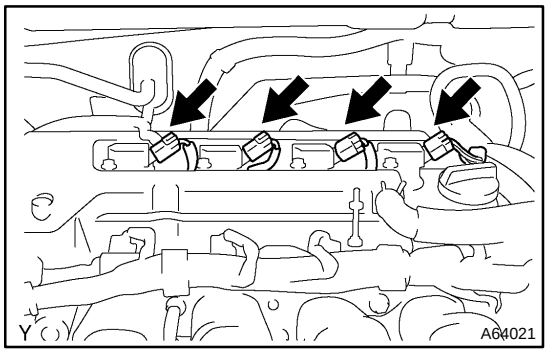

(b) Disconnect the 4 ignition coil connectors.

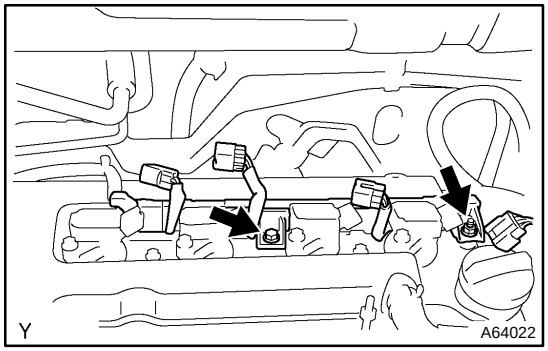

(c) Remove the bolt and nut installing the engine wire.

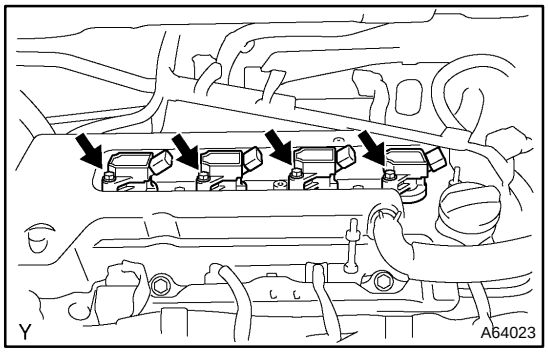

3. REMOVE IGNITION COIL ASSY

(a) Remove the 4 bolts and 4 ignition coils.

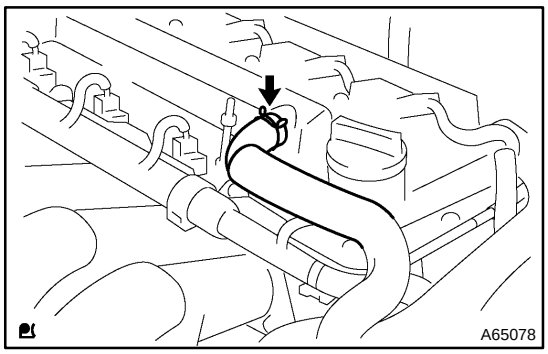

4. DISCONNECT VENTILATION HOSE

(a) Disconnect the ventilation hose from the cylinder head cover.

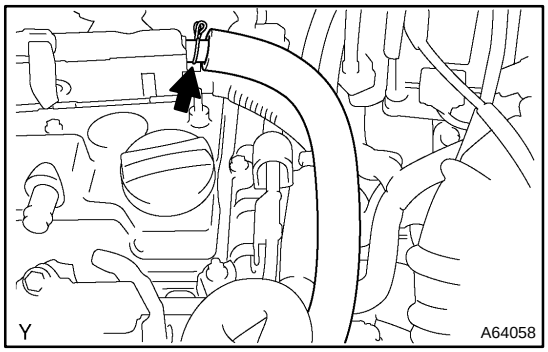

5. DISCONNECT VENTILATION HOSE NO.2

(a) Disconnect the ventilation hose from the cylinder head cover.

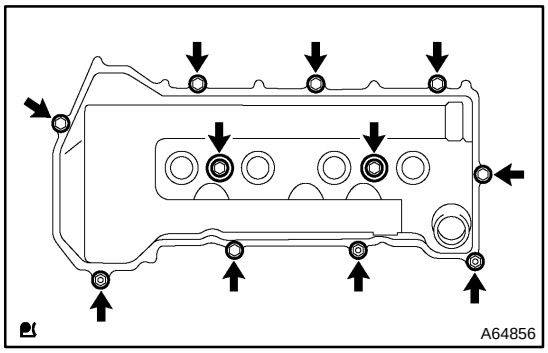

6. REMOVE CYLINDER HEAD COVER SUB–ASSY

(a) Remove the 9 bolts, 2 seal washers, 2 nuts, 3 clamp brackets and cylinder head cover.

7. REMOVE ENGINE UNDER COVER RH

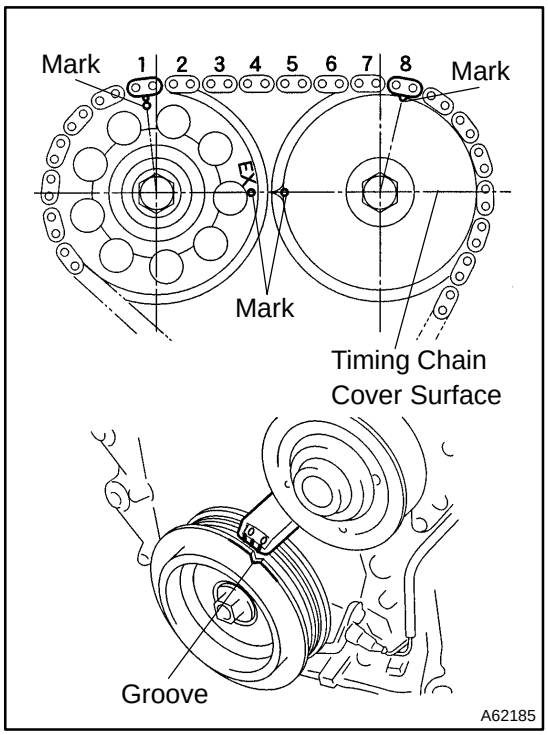

8. SET NO. 1 CYLINDER TO TDC/COMPRESSION

(a) Turn the crankshaft pulley, and align its groove with timing mark ”0” of the timing chain cover.

(b) Check that the point marks of the camshaft timing sprocket and VVT timing sprocket are in straight line on the timing chain cover surface as shown in the illustration.

HINT:

If not, turn the crankshaft 1 revolution (360°) and align the marks as above.

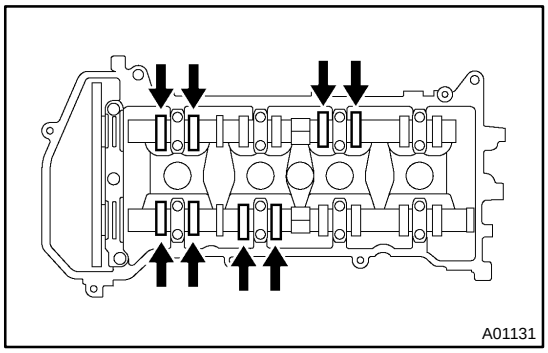

9. INSPECT VALVE CLEARANCE

(a) Check only the valves indicated.

(1) Using a feeler gauge, measure the clearance between the valve lifter and camshaft.

(2) Record the out–of specification valve clearance measurements. They will be used later to determine the required replacement valve lifter.

Valve clearance (Cold):
Intake 0.15 – 0.25 mm (0.0059 – 0.0098 in.)
Exhaust 0.25 – 0.35 mm (0.0098 – 0.0138 in.)

(b) Turn the crankshaft 1 revolution (360 °) and set No. 4 cylinder to TDC/compression.

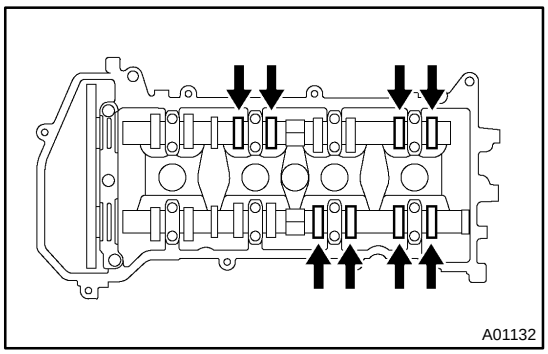

(c) Check only the valves indicated.

(1) Using a feeler gauge, measure the clearance between the valve lifter and camshaft.

(2) Record the out–of specification valve clearance measurements. They will be used later to determine the required replacement valve lifter.

Valve clearance (Cold):
Intake 0.15 – 0.25 mm (0.0059 – 0.0098 in.)
Exhaust 0.25 – 0.35 mm (0.0098 – 0.0138 in.)

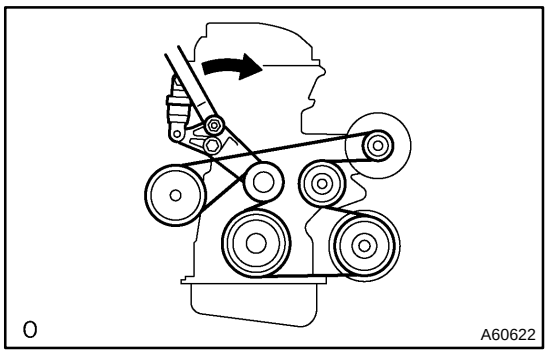

10. REMOVE FAN AND GENERATOR V BELT

(a) Turn the V–ribbed belt tensioner slowly clockwise and loosen it. Then, remove the fan and generator V belt and put back the V–ribbed belt tensioner little by little and fix it quietly.

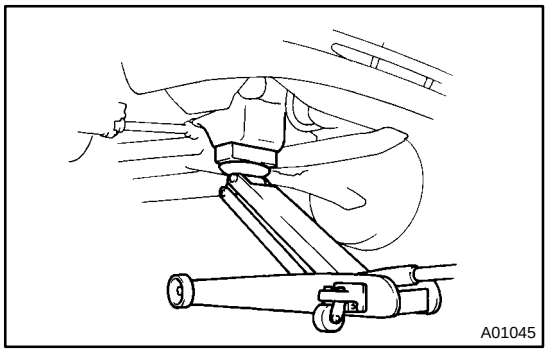

11. REMOVE ENGINE MOUNTING INSULATOR SUB–ASSY RH

(a) Remove the PS oil pump reservoir and put it aside.
(b) Place a wooden block between the jack and engine, and set the jack, then remove the 4 bolts, the 2 nuts and engine mounting insulator RH.

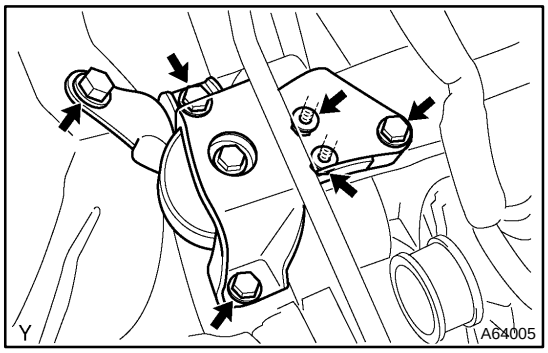

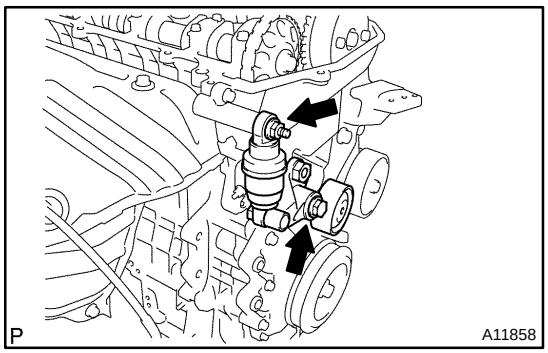

12. REMOVE V–RIBBED BELT TENSIONER ASSY

(a) Remove the bolt, nut and V–ribbed belt tensioner.

HINT:

Handle a jack up and down to remove the bolt.

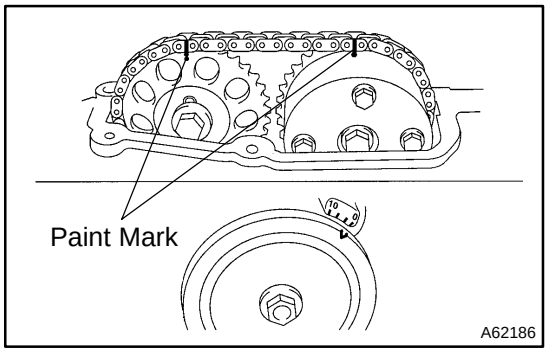

13. ADJUST VALVE CLEARANCE

NOTICE:

Be sure not to revolve the crankshaft without the chain tensioner.

(a) Set the No. 1 cylinder to the TDC/compression.
(b) Place match marks on the timing chain and camshaft timing sprockets.

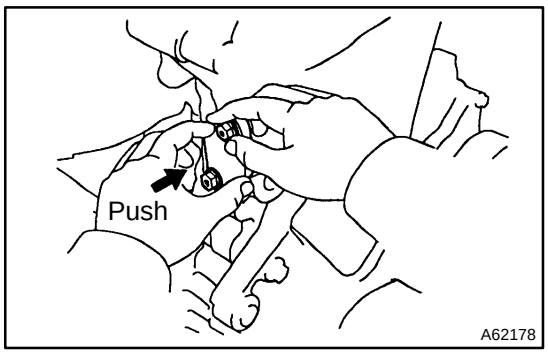

(c) Remove the 2 nuts and chain tensioner.

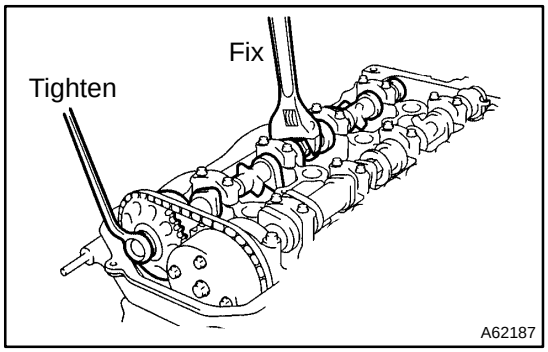

(d) Fix the camshaft with a spanner and so on, then loosen the camshaft timing gear set bolt.

NOTICE:
Be careful not to damage the valve lifter.

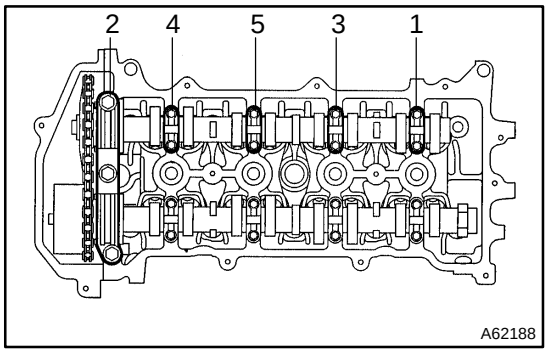

(e) Loosen the camshaft bearing cap bolts on No. 2 camshaft in the order as shown in the illustration in several passes,and remove the caps.

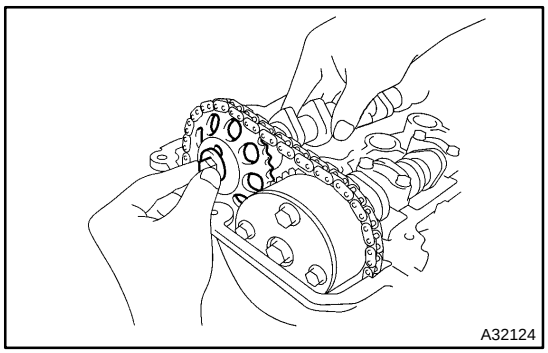

(f) Remove the camshaft timing gear as shown in the illustration.

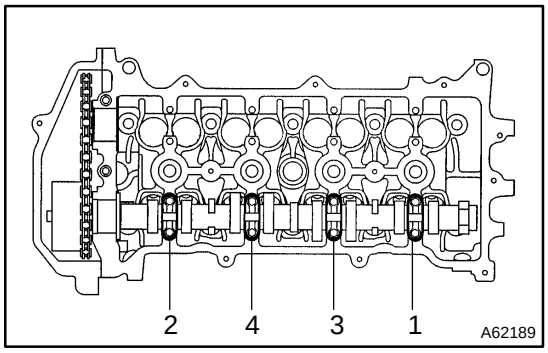

(g) Loosen the camshaft bearing cap bolts on camshaft in the order as shown in the illustration in several passes,and remove the caps.

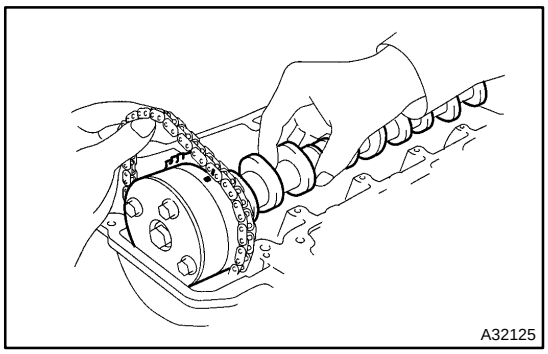

(h) Remove the camshaft with holding the timing chain.

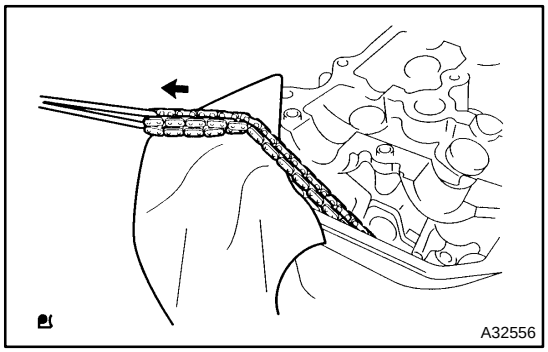

(i) Tie the timing chain with a string as shown in the illustration.

NOTICE:

Be careful not to drop anything inside the timing chain cover.

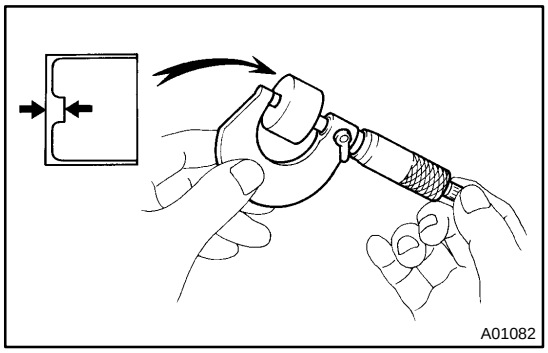

(j) Remove the valve lifters.

(k) Using a micrometer, measure the thickness of the removed lifter.

(l) Calculate the thickness of a new lifter so that the valve clearance comes within the specified value.

A	Thickness of new lifter
B	Thickness of used lifter
C	Measured valve clearance

Valve clearance:

Intake A = B + (C – 0.20 mm (0.0079 in.)

Exhaust A = B + (C – 0.30 mm (0.0118 in.)

HINT:

- Select a new lifter with a thickness as close as possible to the calculated values.
- Lifter are available in 35 sizes in increments of 0.020 mm (0.0008 in.), from 5.060 mm (0.1992 in.) to 5.740 mm (0.2260 in.).

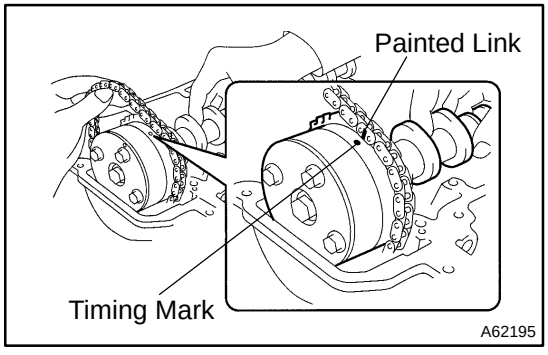

(m) As shown in the illustration, install the timing chain on the camshaft timing gear, with the painted links aligned with the timing marks on the camshaft timing sprocket.

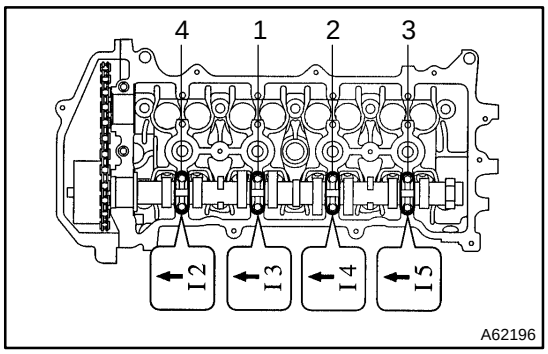

(n) Examine the front marks and numbers and tighten the bolts in the order shown in the illustration.
Torque: 13 N·m (133 kgf·cm, 10 ft·lbf)

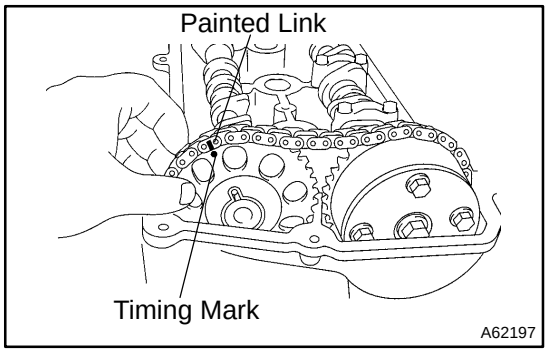

(o) Put the camshaft No.2 on the cylinder head with the painted links of the chain aligned with the timing mark on the camshaft timing sprocket.

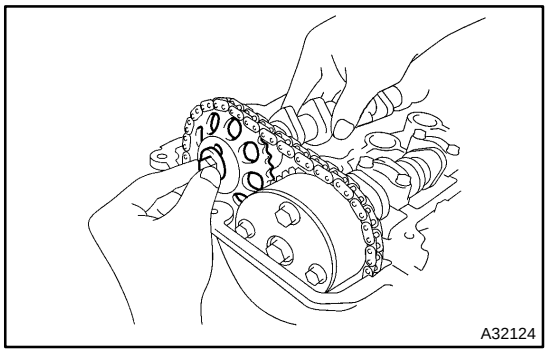

(p) Tighten the camshaft timing gear set bolt temporarily.

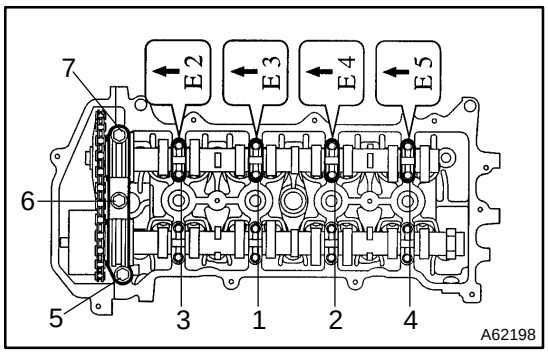

(q) Examine the front marks and numbers and tighten the bolts in the order shown in the illustration.
Torque: 13 N·m (133 kgf·cm, 10 ft·lbf)

(r) Install the bearing cap No. 1.
Torque: 23 N·m (235 kgf·cm, 17 ft·lbf)

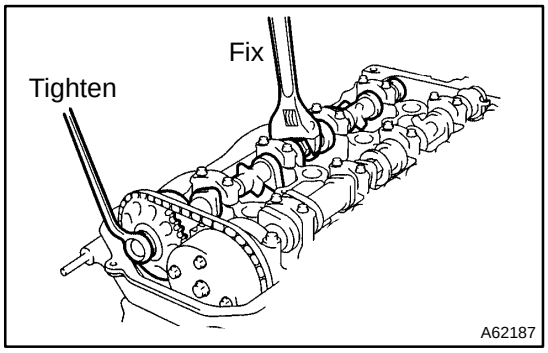

(s) Fix the camshaft with a spanner and so on, then tighten the camshaft timing gear set bolt.
Torque: 54 N·m (551 kgf·cm, 40 ft·lbf)

NOTICE:
Be careful not damage the valve lifter.

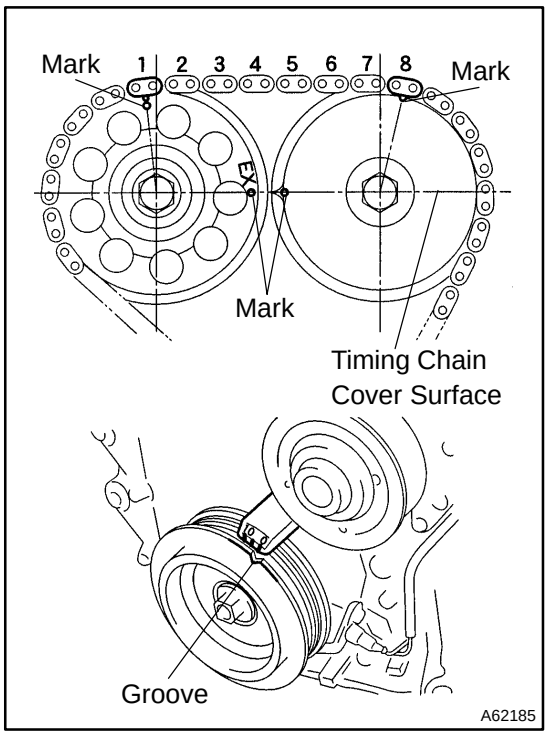

(t) Check the match marks on the timing chain and camshaft timing sprockets, and then the alignment of the pulley groove with timing mark of the chain cover as shown in the illustration.

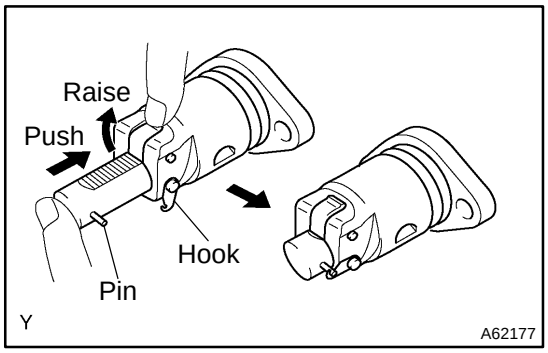

(u) Install chain tensioner.

(1) Check the O–ring is clean, and set the hook as shown in the illustration.

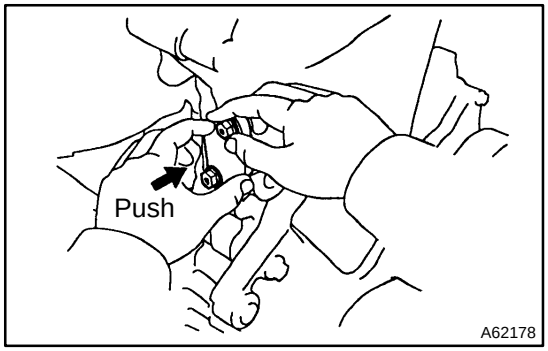

(2) Apply engine oil to the chain tensioner and install it with the 2 nuts.

Torque: 9.0 N·m (92 kgf·cm, 80 in·lbf)

NOTICE:

When installing the tensioner, set the hook again if the hook release the plunger.

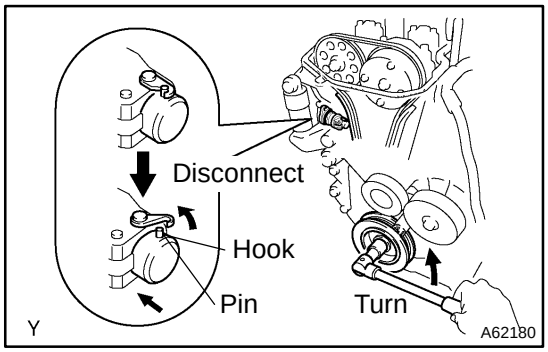

(3) Turn the crankshaft counterclockwise, and disconnect the plunger knock pin from the hook.

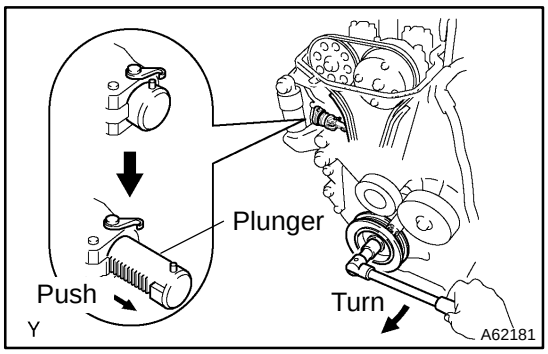

(4) Turn the crankshaft clockwise, and check that the slipper is pushed by the plunger.

HINT:

If the plunger does not spring out, press the slipper into the chain tensioner with a screwdriver so that the hook is released from the knock pin and the plunger springs out.

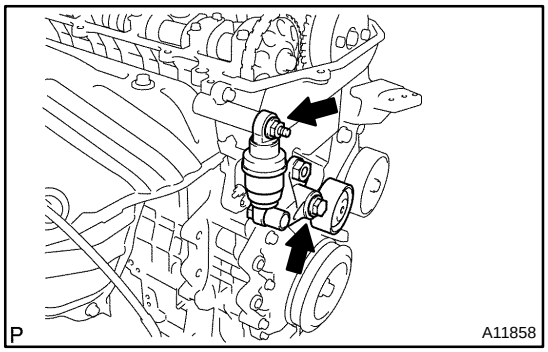

14. INSTALL V–RIBBED BELT TENSIONER ASSY

(a) Install the V–ribbed belt tensioner with the nut and bolt.

Torque:
29 N·m (296 kgf·cm, 21 ft·lbf) for Nut
69 N·m (704 kgf·cm, 51 ft·lbf) for Bolt

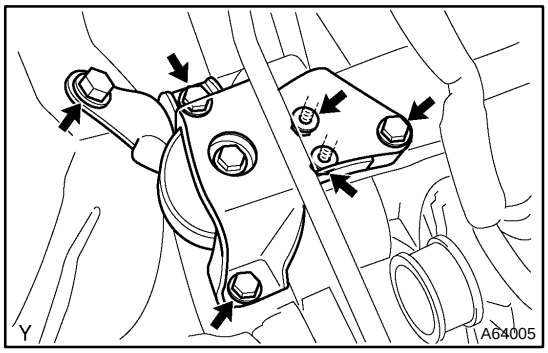

15. INSTALL ENGINE MOUNTING INSULATOR SUB–ASSY RH

(a) Install engine mounting insulator RH with the 4 bolts and the 2 nuts.

Torque: 52 N·m (530 kgf·cm, 38 ft·lbf)

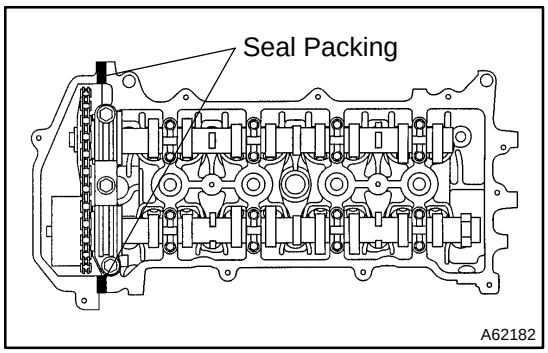

16. INSTALL CYLINDER HEAD COVER SUB–ASSY

(a) Remove any old packing (FIPG) material.

(b) Apply seal packing to 2 locations as shown in the illustration.

Seal packing: Part No. 08826–00080 or equivalent

NOTICE:

- **Remove any oil from the contact surface.**
- **Install the cylinder head cover within 3 minutes after applying seal packing.**
- **Do not put into engine oil 2 hours after installing.**

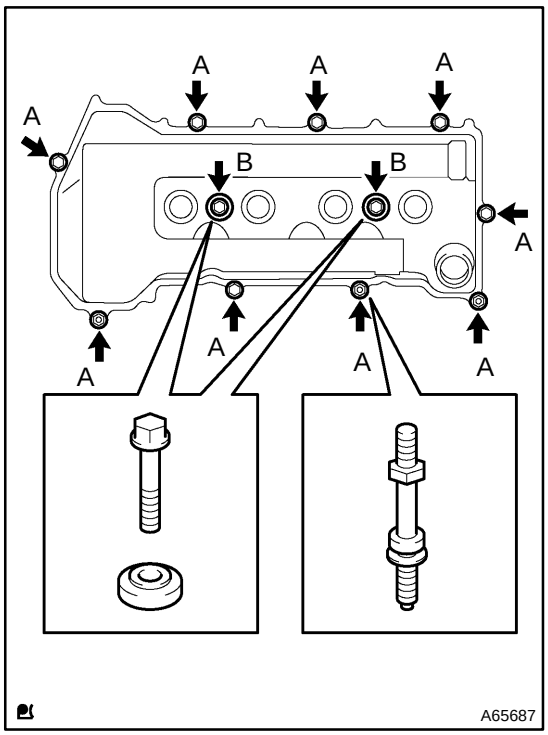

(c) Install the cylinder head cover and cable bracket with the 9 bolts, 2 seal washers and 2 nuts. Uniformly tighten the bolts and nuts, in the several passes.
Torque:
A 11 N·m (112 kgf·cm, 8 ft·lbf)
B 9.0 N·m (92 kgf·cm, 80 in·lbf)

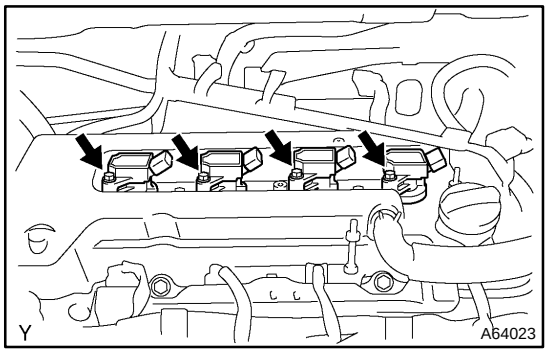

17. INSTALL IGNITION COIL ASSY
(a) Install the 4 ignition coils with the 4 bolts.
Torque: 9.0 N·m (92 kgf·cm, 80 in.·lbf)

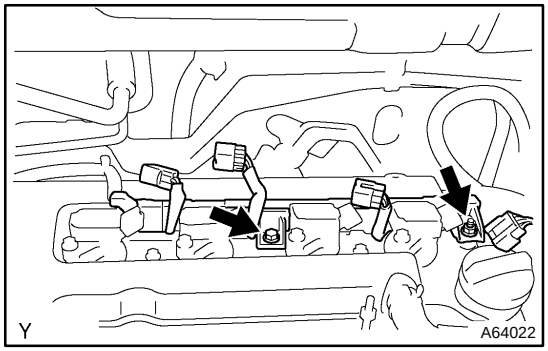

18. INSTALL ENGINE WIRE
(a) Install the engine wire with the bolt and nut.
Torque: 9.0 N·m (92 kgf·cm, 80 in.·lbf)

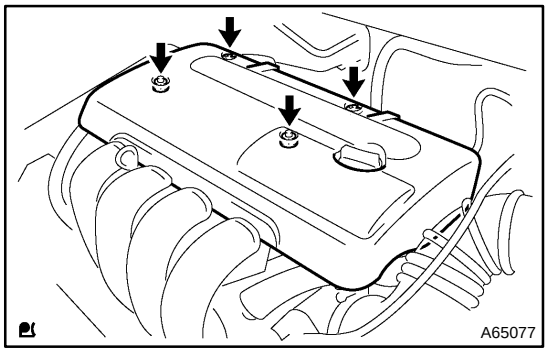

19. INSTALL CYLINDER HEAD COVER NO.2
(a) Install the cylinder head cover with the 2 nuts and 2 clips.
Torque: 7.0 N·m (71 kgf·cm, 62 in.·lbf)

20. CHECK ENGINE OIL LEAK

EXHAUST PIPE

COMPONENTS

1504H–01

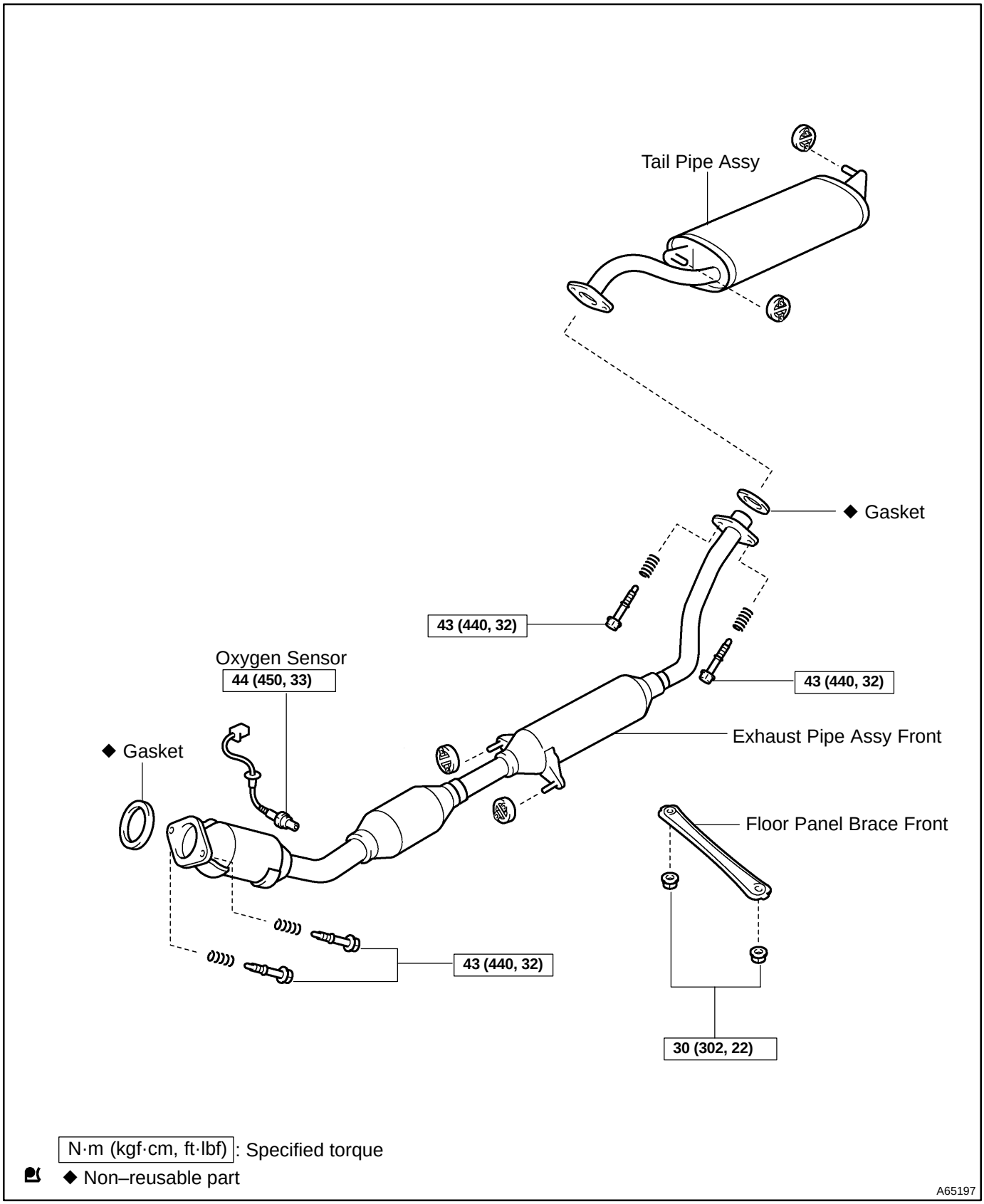

1504I–02

Removal & Installation and Disassembly & Reassembly

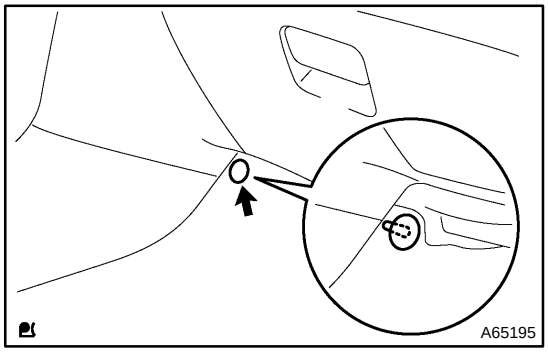

1. REMOVE OXYGEN SENSOR

(a) Remove a clip and tear off the floor mat.

(b) Disconnect a oxygen sensor connector.

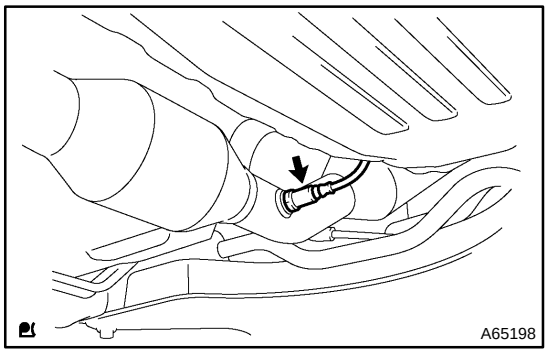

(c) Remove the oxygen sensor.

2. REMOVE TAIL PIPE ASSY

(a) Remove 2 bolts, 2 springs and tail pipe assy.

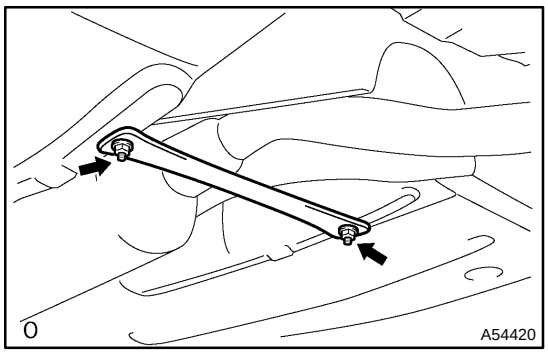

3. REMOVE FLOOR PANEL BRACE FRONT

(a) Remove 2 nuts and the front floor panel brace front.

4. REMOVE EXHAUST PIPE ASSY FRONT

(a) Remove 2 bolts, 2 springs and exhaust pipe assy front.

5. INSTALL EXHAUST PIPE ASSY FRONT

(a) Using vernier calipers, measure the free length of the compression spring.

Minimum length: 41.5 mm (1.634 in.)

HINT:

If the free length is less than minimum, replace the compression spring.

(b) Install a new gasket on the exhaust manifold.

(c) Install the exhaust pipe front with 2 bolts and 2 springs.

Torque: 43 N·m (440 kgf·cm, 32 ft·lbf)

6. INSTALL FLOOR PANEL BRACE FRONT

(a) Install the front panel brace front with 2 nuts.
Torque: 30 N·m (302 kgf·cm, 22 ft·lbf)

7. INSTALL TAIL PIPE ASSY

(a) Using vernier calipers, measure the free length of the compression spring.
Minimum length: 38.5 mm (1.516 in.)

HINT:

If the free length is less than minimum, replace the compression spring.

(b) Install a new gasket on the exhaust pipe front.

(c) Install the exhaust tail pipe with 2 bolts and 2 springs.
Torque: 43 N·m (440 kgf·cm, 32 ft·lbf)

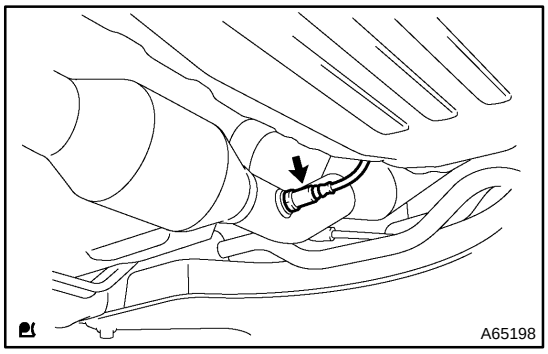

8. INSTALL OXYGEN SENSOR

(a) Install the oxygen sensor to the exhaust pipe front.
Torque: 44 N·m (450 kgf·cm, 33 ft·lbf)

(b) Connect the oxygen sensor connector.

HINT:

After installing oxygen sensor, check that sensor wire is not twisted. If it is twisted, remove the oxygen sensor and reinstall it.

9. CHECK EXHAUST GAS LEAK

COOLANT

REPLACEMENT

160C8–01

1. DRAIN COOLANT

CAUTION:

To avoid the danger of being burned, do not remove the radiator cap while the engine and radiator are still hot, as fluid and steam can be blown out under pressure.

(a) Remove the radiator cap.

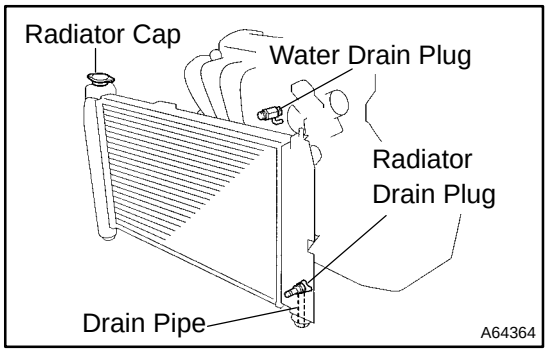

(b) Loosen the radiator and engine drain plugs, and drain the coolant.

(c) Close the drain plugs.

Torque: 13 N·m (130 kgf·cm, 9 ft·lbf) for engine

2. ADD COOLANT

(a) Slowly fill the system with coolant.

HINT:

- Use of improper coolants may damage engine cooling system.
- Use ”Toyota Long Life Coolant” or equivalent and mix it with plain water according to the manufacturer’s directions.
- Using of coolant with includes more than 50 % (freezing protection down to –35°C (–31°F) or 60 % (freezing protection down to –50°C (–58°F)) of ethylene–glycol is recommended but not more than 70 %.

NOTICE:

- **Do not use an alcohol type coolant or plain water alone.**
- **The coolant should be mixed with plain water (preferably demineralized water).**

Capacity: 6.5 liters (6.9 US qts, 5.7 lmp. qts)

3. CHECK ENGINE COOLANT LEAK

(a) Fill the radiator with coolant and attach a radiator cap tester.

(b) Pump it to 118 kPa and check leakage.

160C7–01

INSPECTION

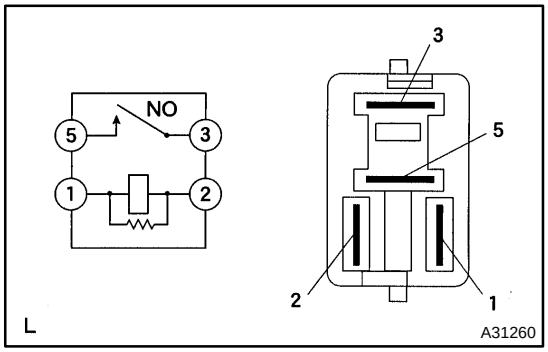

1. COOLING FAN RELAY

(a) Inspect the cooling fan relay continuity.

(1) Using an ohmmeter, check that there is continuity between terminals 1 and 2.

If there is no continuity, replace the relay.

(2) Check that there is no continuity between terminals 3 and 5.

If there is continuity, replace the relay.

(3) Apply battery voltage across terminals 1 and 2.

(4) Using an ohmmeter, check that there is continuity between terminals 3 and 5.

If there is no continuity, replace the relay.

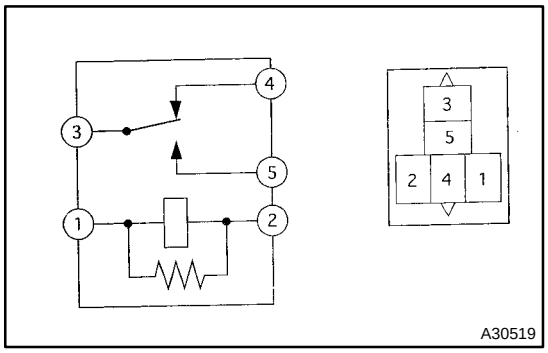

2. COOLING FAN RELAY NO.2

(a) Inspect the cooling fan relay continuity.

(1) Using an ohmmeter, check that there is continuity between terminals 1 and 2.

If there is no continuity, replace the relay.

(2) Using an ohmmeter, check that there is continuity between terminals 3 and 4.

If there is no continuity, replace the relay.

(3) Check that there is no continuity between terminals 3 and 5.

If there is continuity, replace the relay.

(4) Apply battery voltage across terminals 1 and 2.

(5) Using an ohmmeter, check that there is continuity between terminals 3 and 5.

If there is no continuity, replace the relay.

3. COOLING FAN RESISTOR

(a) Using an ohmmeter, measure the resistance between the terminals.

Resistance: 1.17 – 1.43 Ω at 20 °C (68 °F)

COOLING FAN SYSTEM

160C6–02

ON–VEHICLE INSPECTION

1. CHECK COOLING FAN OPERATION WITH LOW TEMPERATURE (Below 83°C (181°F))

(a) Turn the ignition switch ON.

(b) Check that the cooling fan stops.

HINT:

If not, check the cooling fan relay and water temperature sensor, and check for separated connector or severed wire between the cooling fan relay and water temperature sensor.

(c) Disconnect the water temperature sensor connector.

(d) Check that the cooling fan rotates.

If not, check the fuses, cooling fan relay, ECM and cooling fan, and check for a short circuit between the cooling fan relay and water temperature sensor.

(e) Reconnect the water temperature sensor connector.

2. CHECK COOLING FAN OPERATION WITH HIGH TEMPERATURE (Above 93°C (199°F))

(a) Start the engine, and raise coolant temperature to above 93°C (199°F).

HINT:

Coolant temperature is the detected value by the water temperature sensor on the water outlet.

(b) Check that the cooling fan rotates.

HINT:

If not, replace the water temperature sensor.

3. INSPECT COOLING FAN

(a) Disconnect the cooling fan connector.

(b) Connect battery and ammeter to the connector.

(c) Check that the cooling fan rotates smoothly, and check the reading on the ammeter.

Standard amperage:

Approx. 8.0 – 12.0 A at 20°C (68°F)

(d) Reconnect the cooling fan connector.

160C5–04

INSPECTION

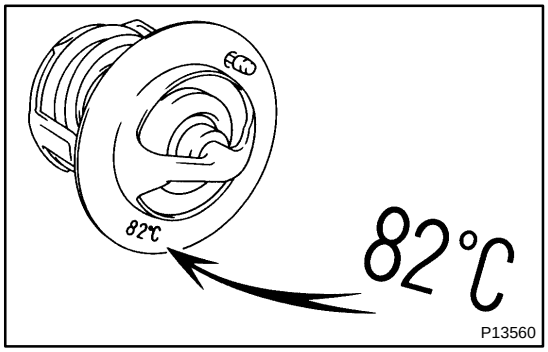

1. THERMOSTAT

HINT:

The thermostat is numbered with the valve opening temperature.

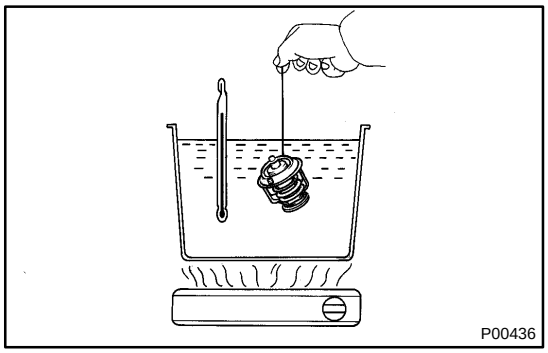

(a) Immerse the thermostat in water and gradually heat the water.

(b) Check the valve opening temperature.

Valve opening temperature:
80 to 84°C (176 to 183°F)

HINT:

If the valve opening temperature is not as specified, replace the thermostat.

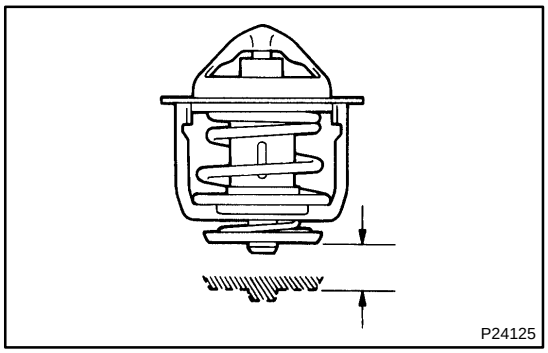

(c) Check the valve lift.

Valve lift: 10 mm (0.39 in.) or more at 95°C (203°F)

HINT:

If the valve lift is not as specified, replace the thermostat.

(d) Check that the valve is fully closed when the thermostat is at low temperatures (below 77°C (171°F)).

HINT:

If not closed, replace the thermostat.

2. RADIATOR CAP SUB–ASSY

NOTICE:

- **If the radiator cap has contaminations, always rinse it with water.**
- **Before using a radiator cap tester, wet the relief valve and pressure valve with engine coolant or water.**
- **When performing step (a) and (b) below, keep the tester at an angle of over 30° above the horizontal.**

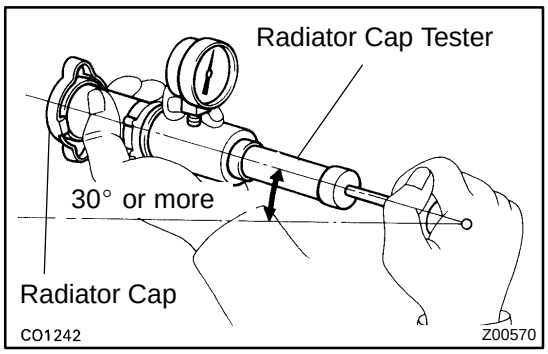

(a) Using a radiator cap tester, slowly pump the tester and check that air is coming from the vacuum valve.

Pump speed: 1 push / 3 seconds or more

NOTICE:

Push the pump at a constant speed.

If air is not coming from the vacuum valve, replace the radiator cap.

(b) Pump the tester and measure the relief valve opening pressure.

Pump speed: 1 push within 1 second

NOTICE:

The above pump speed is for the first pump only (in order to close the vacuum valve). After the first pump, the pump speed can be reduced.

Standard opening pressure:

74 to 103 kPa (0.75 to 1.05 kgf/cm^2, 10.7 to 14.9 psi)

Minimum opening pressure:

59 kPa (0.6 kgf/cm^2, 8.5 psi)

HINT:

Use the tester's maximum reading as the opening pressure.

If the opening pressure is less than minimum, replace the radiator cap.

COOLING SYSTEM (April, 2003)

160NX–02

ON–VEHICLE INSPECTION

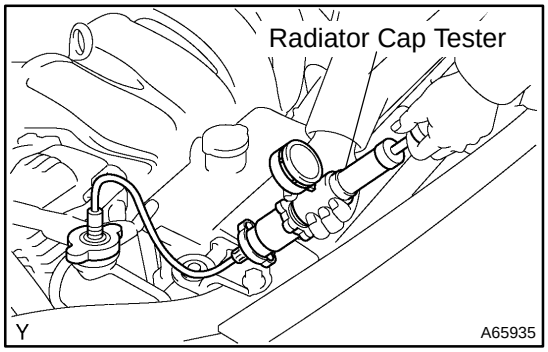

1. INSPECT COOLING SYSTEM FOR LEAKS

CAUTION:

To avoid the danger of being burned, do not remove the radiator cap while the engine and radiator are still hot, as fluid and steam can be blown out under pressure.

(a) Fill the radiator with coolant and attach a radiator cap tester.

(b) Warm up the engine.

(c) Pump it to 118 kPa (1.2 kgf/cm^2, 17.1 psi), and check that the pressure does not drop.

HINT:

If the pressure drops, check the hoses, radiator or water pump for leaks. If no external leaks are found, check the heater core, cylinder block and head.

2. CHECK ENGINE COOLANT LEVEL AT RESERVOIR

(a) The engine coolant level should be between the ”LOW” and ”FULL” line.

HINT:

If low, check for leaks and add ”Toyota Long Life Coolant” or equivalent up to the ”FULL” line.

3. CHECK ENGINE COOLANT QUALITY

(a) Remove the radiator cap.

CAUTION:

To avoid the danger of being burned, do not remove the radiator cap while the engine and radiator are still hot, as fluid and steam can be blown out under pressure.

(b) Check if there is any excessive deposits of rust or scale around the radiator cap and radiator filler hole; the coolant should be free from oil.

HINT:

If excessively dirty, replace the coolant.

(c) Reinstall the radiator cap.

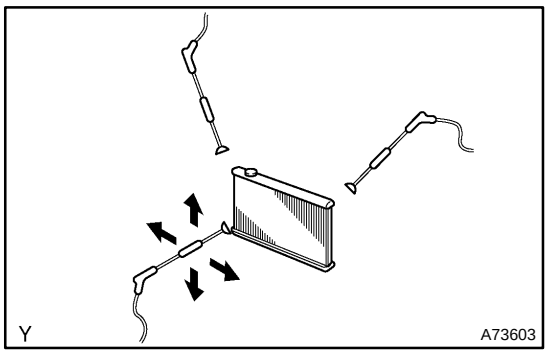

4. INSPECT FINS BLOCKAGE

(a) If fins are clogged, wash them with water or a steam cleaner and dry with compressed air.

NOTICE:

- **If the distance between the steam cleaner and core is too close, there is a possibility of damaging the fins, so keep the following injection distance.**

Injection Pressures kPa (kgf/cm^2, psi)	Injection Distance mm (in.)
2,942 to 4,903 (30 to 50, 427 to 711)	300 (11.811)
4,903 to 7,845 (50 to 80, 711 to 1,138)	500 (19.685)

- **If the fins are bent, straighten them with a screwdriver or pliers.**
- **Be careful not pour water directly onto electronic components.**

RADIATOR ASSY

160CC–02

REPLACEMENT

1. **DRAIN COOLANT(See page 16–7)**
2. **SEPARATE RADIATOR HOSE INLET**
3. **SEPARATE RADIATOR HOSE OUTLET**
4. **SEPARATE OIL COOLER INLET TUBE NO.1**
5. **SEPARATE OIL COOLER OUTLET TUBE NO.1**
6. **REMOVE RADIATOR ASSY**

(a) Disconnect the fan motor connector.
(b) Disconnect two clamps for wire–harness from fan–shroud.
(c) Remove the two fan mount bolts.
(d) Remove the fan w/motor.

7. **ADD COOLANT (See page 16–7)**
8. **CHECK ENGINE COOLANT LEAK (See page 16–7)**

THERMOSTAT

160CB–01

REPLACEMENT

1. REMOVE ENGINE UNDER COVER RH
2. DRAIN COOLANT (See page 16–7)

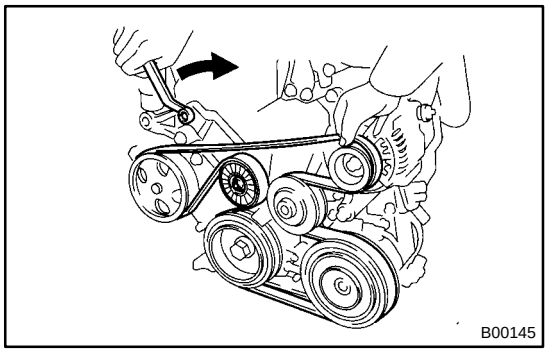

3. REMOVE FAN AND GENERATOR V BELT (See page 14–4)

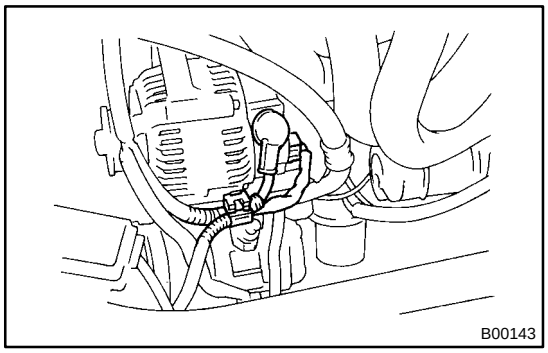

4. REMOVE GENERATOR ASSY

(a) Disconnect the wire clamp from the wire clip on the rectifire end frame.

(b) Remove the rubber cap and nut, and disconnect the alternator wire.

(c) Disconnect the alternator connector.

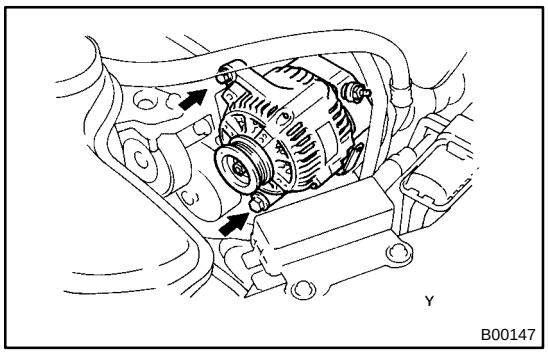

(d) Remove the 2 bolts and alternator.

5. REMOVE WATER INLET
6. REMOVE THERMOSTAT

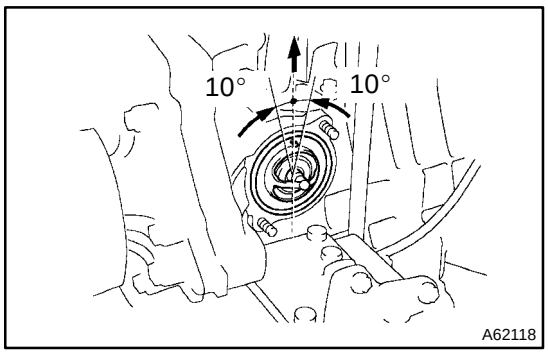

7. INSTALL THERMOSTAT

(a) Install a new gasket to the thermostat.

(b) Install the thermostat with the jiggle valve upward as shown in the illustration.

8. INSTALL WATER INLET
Torque: 11 N·m (113 kgf·cm, 8 ft·lbf)

9. INSTALL GENERATOR ASSY
Torque:
12mm head 25 N·m (250 kgf·cm, 18 ft·lbf)
14mm head 54 N·m (550 kgf·cm, 39 in.·lbf)

10. ADD COOLANT (See page 16–7)

11. CHECK ENGINE COOLANT LEAK (See page 16–7)

INSPECTION

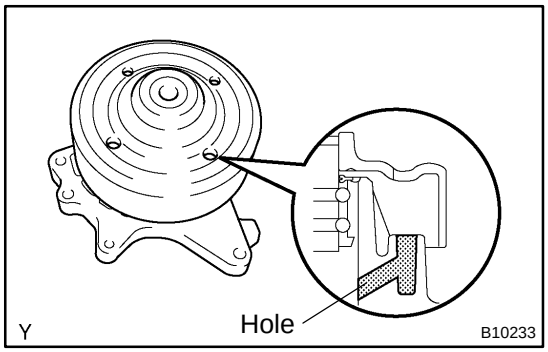

1. INSPECT WATER PUMP ASSY

(a) Visually check the drain hole for coolant leakage.

WATER PUMP ASSY

160C9–01

REPLACEMENT

1. REMOVE ENGINE UNDER COVER RH
2. DRAIN COOLANT (See page 16–7)

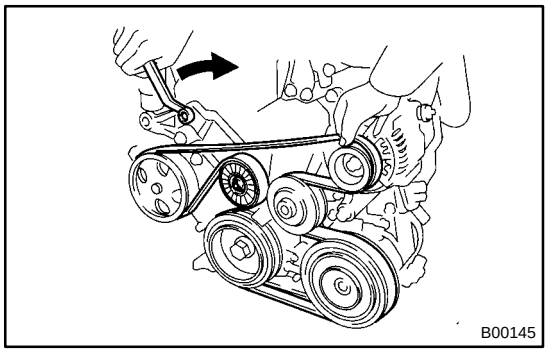

3. REMOVE FAN AND GENERATOR V BELT (See page 14–4)

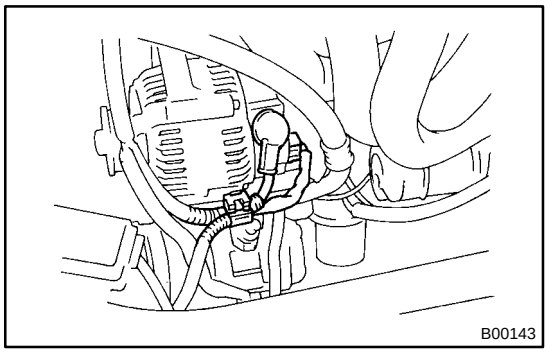

4. REMOVE GENERATOR ASSY

(a) Disconnect the wire clamp from the wire clip on the rectifire end frame.

(b) Remove the rubber cap and nut, and disconnect the alternator wire.

(c) Disconnect the alternator connector.

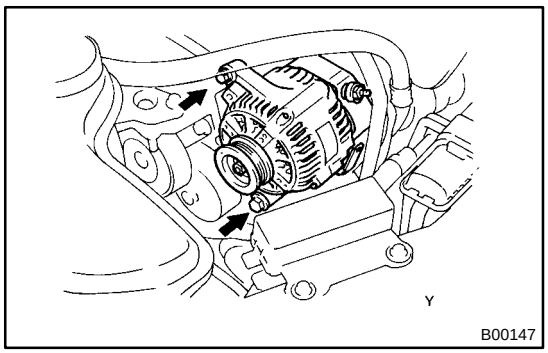

(d) Remove the 2 bolts and alternator.

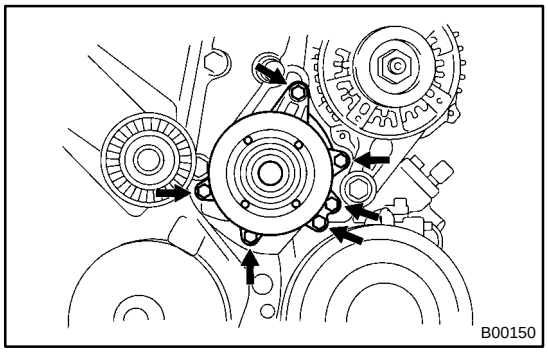

5. REMOVE WATER PUMP ASSY

(a) Remove the 6 bolts, water pump and O–ring.

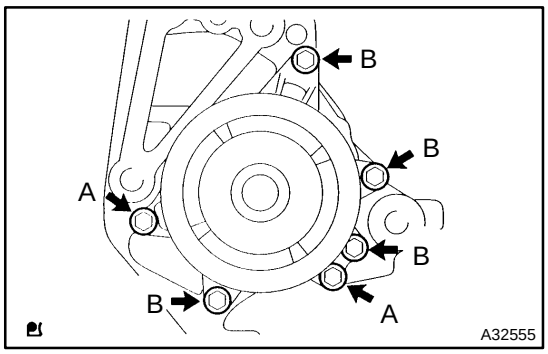

6. INSTALL WATER PUMP ASSY

(a) Place a new O–ring on the timing chain cover.

(b) Install the water pump with the 6 bolts.

Torque:
Bolt A 9.0 N·m (92 kgf·cm, 80 in·lbf)
Bolt B 11 N·m (113 kgf·cm, 8 ft·lbf)

7. INSTALL GENERATOR ASSY

Torque:
12 mm head 25 N·m (250 kgf·cm, 18 ft·lbf)
14 mm head 54 N·m (550 kgf·cm, 39 ft·lbf)

8. ADD COOLANT (See page 16–7)

9. CHECK ENGINE COOLANT LEAK (See page 16–7)

OIL FILTER SUB–ASSY

1707K–01

REPLACEMENT

CAUTION:

- **Prolonged and repeated contact with mineral oil will result in the removal of natural fats from the skin, leading to dryness, irritation and dermatitis. In addition, used engine oil contains potentially harmful contaminants which may cause skin cancer.**
- **Exercise caution in order to minimize the length and frequency of contact of your skin to used oil. Wear protective clothing and gloves. Wash your skin thoroughly with soap and water, or use water–less hand cleaner to remove any used engine oil. Do not use gasoline, thinners, or solvents.**
- **In order to preserve the environment, used oil and used oil filter must be disposed of only at designated disposal sites.**

1. REMOVE ENGINE UNDER COVER RH

2. DRAIN ENGINE OIL

(a) Remove the oil pan drain plug and drain the engine oil.

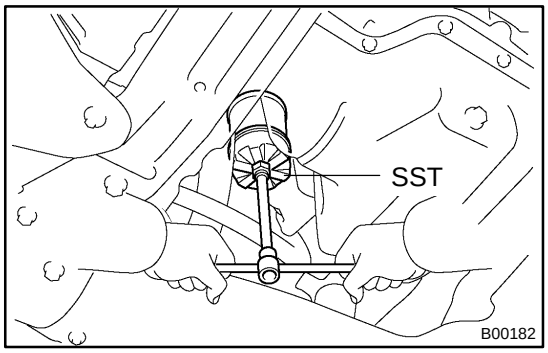

3. REMOVE OIL FILTER SUB–ASSY

(a) Using SST, remove the oil filter
SST 09228–06501

4. INSTALL OIL FILTER SUB–ASSY

(a) Check and clean the oil filter installation surface.

(b) Apply clean engine oil to the gasket of a new oil filter.

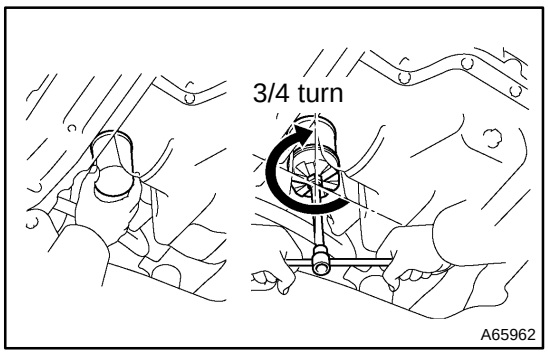

(c) Lightly screw the oil filter into place, and tighten it until the gasket contacts the seat.

(d) Using SST, tighten it an additional 3/4 turn.
SST 09228–06501

5. INSTALL OIL PAN DRAIN PLUG

(a) Clean and install the oil pan drain plug with a new gasket.
Torque: 37 N·m (377 kgf·cm, 27 in.·lbf)

6. ADD ENGINE OIL

Capacity:

Drain and refill w/ Oil filter change 3.7 liters (3.9 US qts, 3.3 lmp. qts)

Drain and refill w/o Oil filter change 3.5 liters (3.7 US qts, 3.1 lmp. qts)

Dry fill 4.2 liters (4.4 US qts, 3.7 lmp. qts)

7. INSPECT OIL LEAK

OIL PUMP ASSY

1707L–01

COMPONENTS

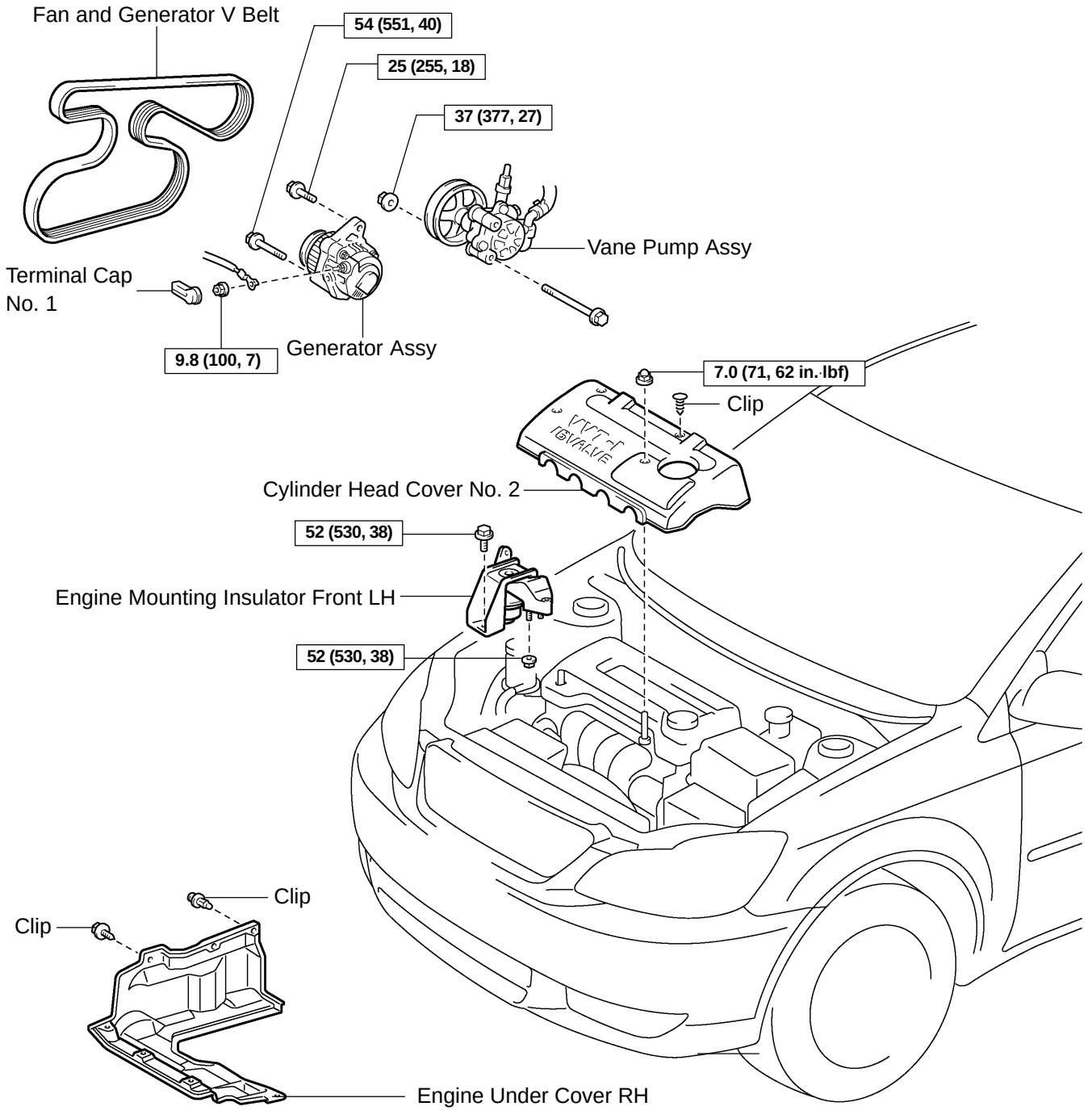

0 N·m (kgf·cm, ft·lbf) : Specified torque

A64042

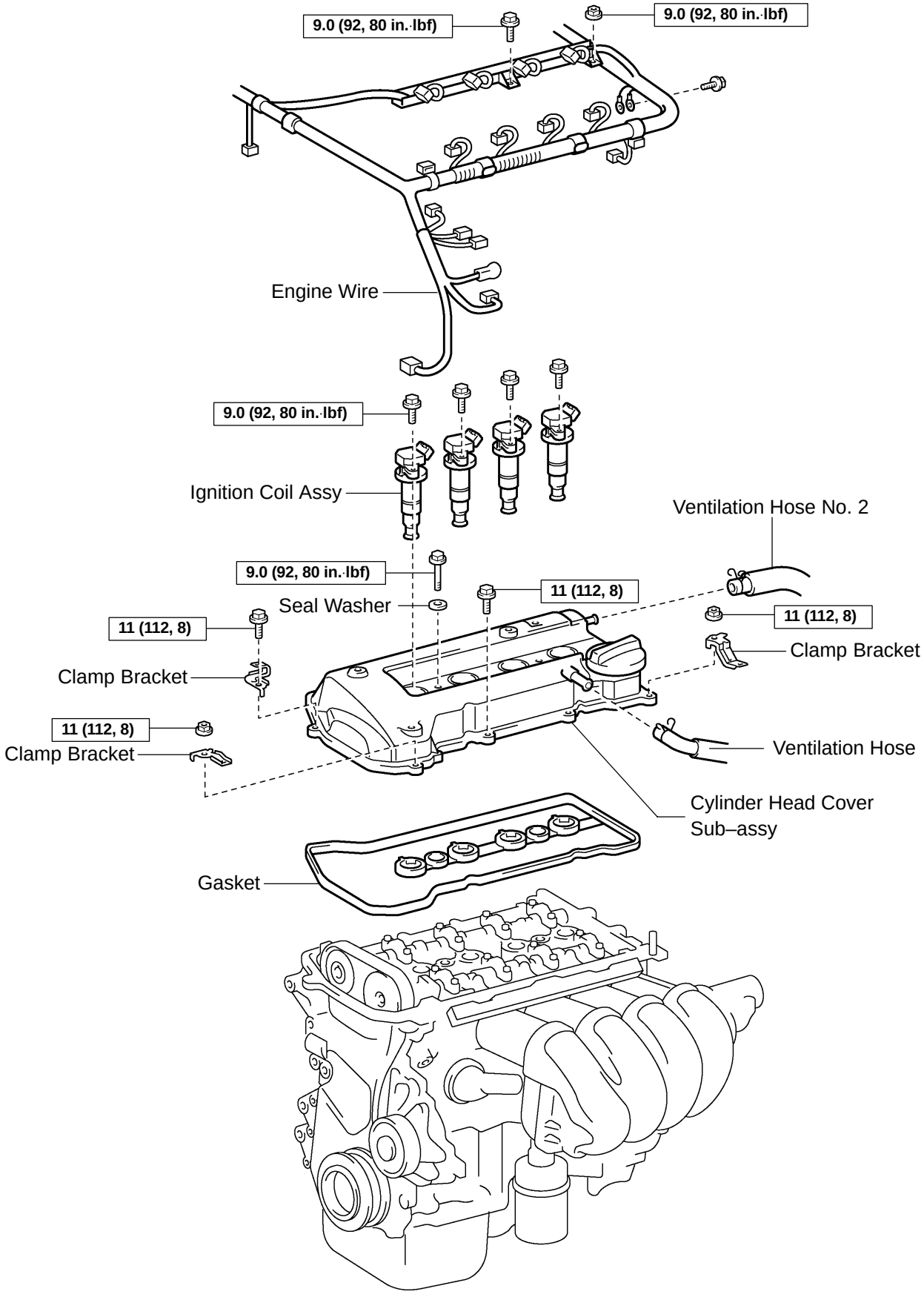

○ N·m (kgf·cm, ft·lbf) : Specified torque

A64043

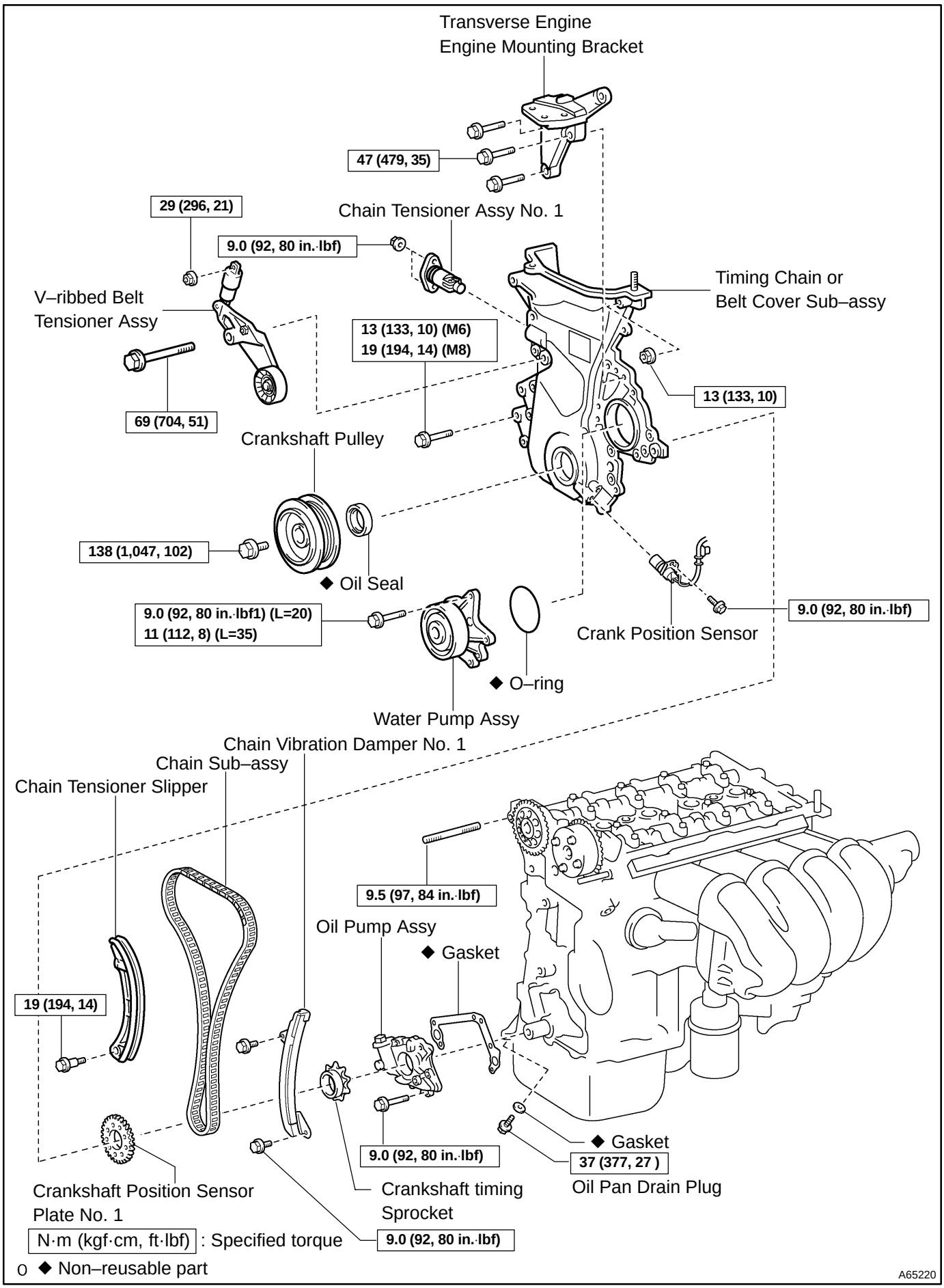
Transverse Engine
Engine Mounting Bracket
47 (479, 35)
29 (296, 21)
Chain Tensioner Assy No. 1
9.0 (92, 80 in.·lbf)
V–ribbed Belt
Tensioner Assy
Timing Chain or
Belt Cover Sub–assy
13 (133, 10) (M6)
19 (194, 14) (M8)
13 (133, 10)
69 (704, 51)
Crankshaft Pulley
138 (1,047, 102)
◆ Oil Seal
9.0 (92, 80 in.·lbf1) (L=20)
11 (112, 8) (L=35)
Crank Position Sensor
9.0 (92, 80 in.·lbf)
◆ O–ring
Water Pump Assy
Chain Vibration Damper No. 1
Chain Sub–assy
Chain Tensioner Slipper
9.5 (97, 84 in.·lbf)
Oil Pump Assy
◆ Gasket
19 (194, 14)
◆ Gasket
9.0 (92, 80 in.·lbf)
37 (377, 27)
Oil Pan Drain Plug
Crankshaft Position Sensor
Plate No. 1
Crankshaft timing
Sprocket
N·m (kgf·cm, ft·lbf) : Specified torque
9.0 (92, 80 in.·lbf)
◆ Non–reusable part
A65220

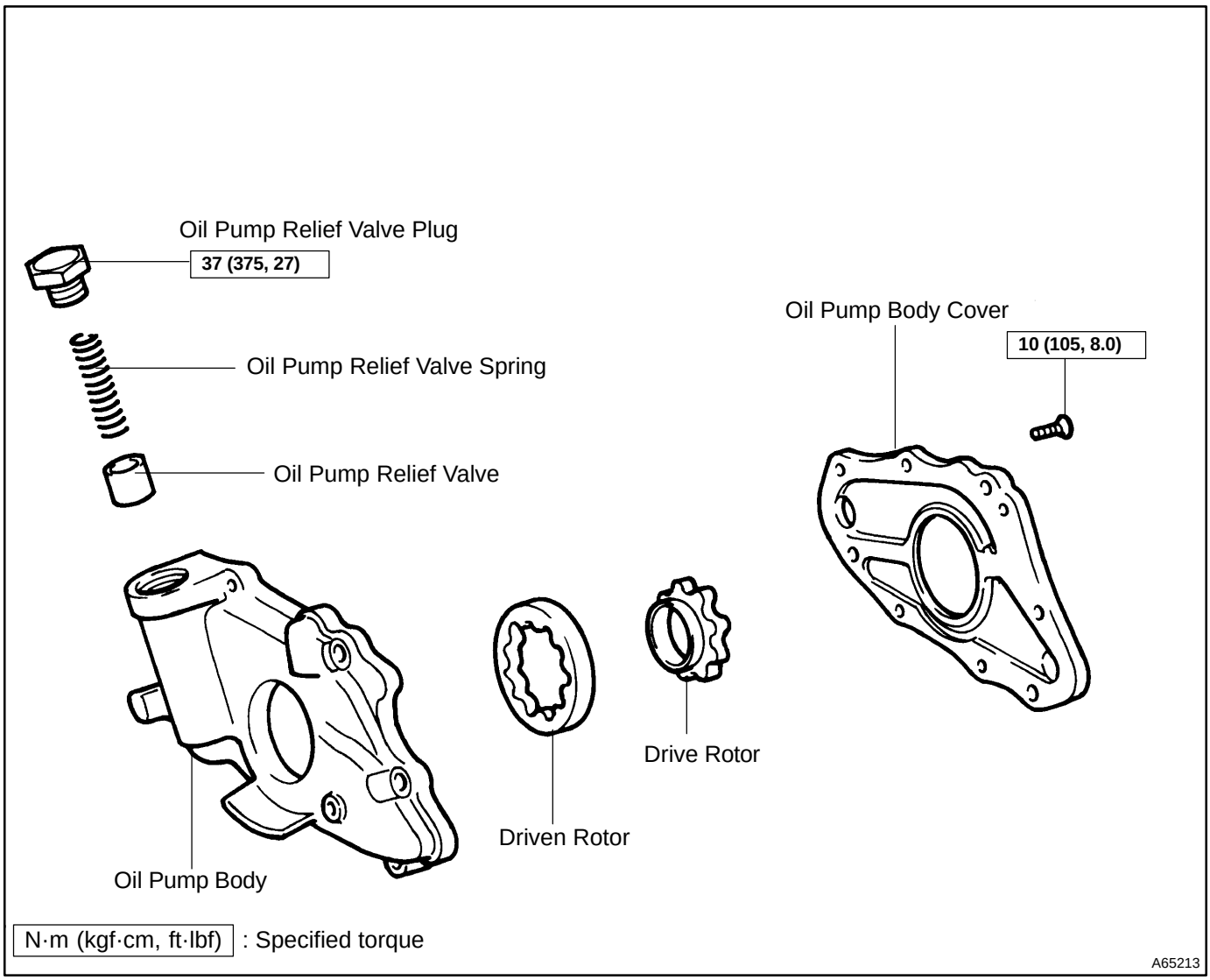
Oil Pump Relief Valve Plug
37 (375, 27)
Oil Pump Relief Valve Spring
Oil Pump Relief Valve
Oil Pump Body Cover
10 (105, 8.0)
Drive Rotor
Driven Rotor
Oil Pump Body
N·m (kgf·cm, ft·lbf) : Specified torque
A65213

1707N–01

OVERHAUL

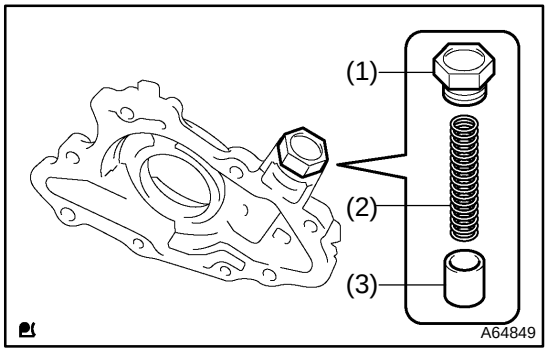

1. REMOVE OIL PUMP RELIEF VALVE

(a) Remove the oil pump relief valve plug, oil pump relief valve spring and oil pump relief valve.
- (1) Oil pump relief valve plug
- (2) Oil pump relief valve spring
- (3) Oil pump relief valve

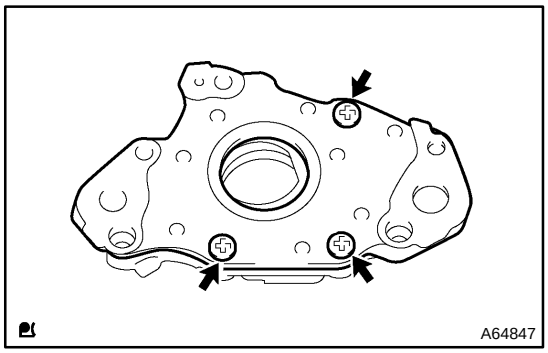

2. INSPECT OIL PUMP ASSY

(a) Remove 3 screws and oil pump cover.

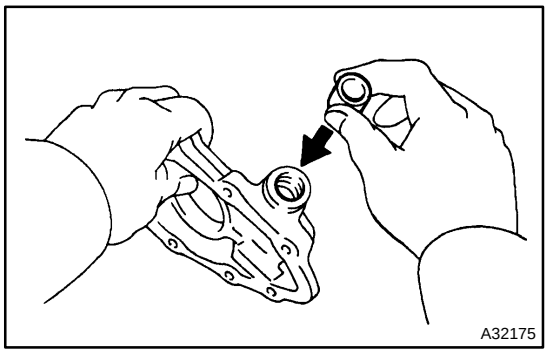

(b) Inspect the oil pump relief valve.
- (1) Coat the valve with engine oil and check that it falls smoothly into the valve hole by it own weight.

(c) Inspect the oil pump rotor sub–assembly.
- (1) Coat the oil pump gear set with engine oil and place them into the oil pump body. Check that the rotors revolves smoothly.

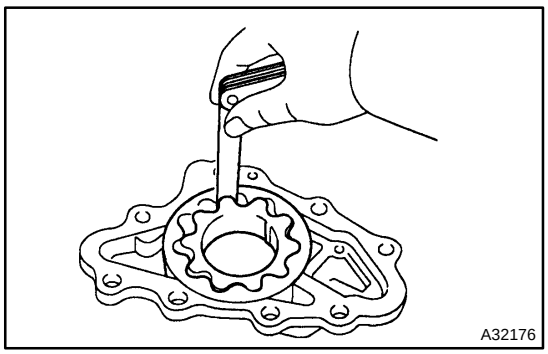

(d) Inspect rotor tip clearance.
- (1) Using a feeler gauge, measure the clearance between the drive and driven rotor tips.

Standard tip clearance:
0.040 – 0.160 mm (0.0016 – 0.0063 in.)

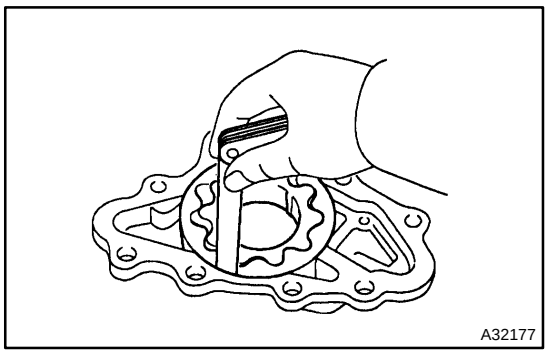

(e) Inspect body clearance.
(1) Using a feeler gauge, measure the clearance between the driven rotor and body.
Standard body clearance:
0.260 – 0.325 mm (0.0102 – 0.0128 in.)

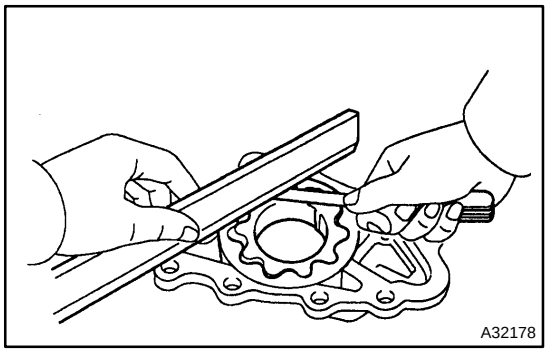

(f) Inspect rotor side clearance.
(1) Using a feeler gauge and precision straight edge, measure the clearance between the rotors and precision straight edge.
Standard side clearance:
0.025 – 0.071 mm (0.0010 – 0.0028 in.)

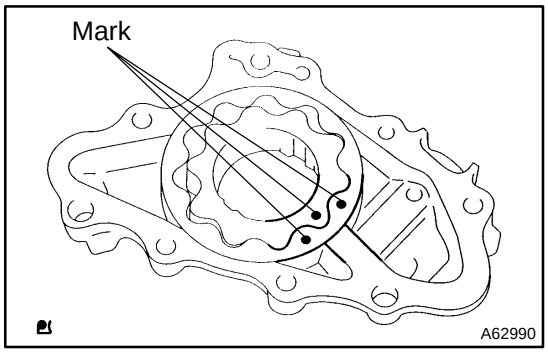

(g) Install oil pump rotor sub–assembly.
(1) Coat the oil pump gear set with engine oil and place it into pump body with the marks facing the pump body cover side.

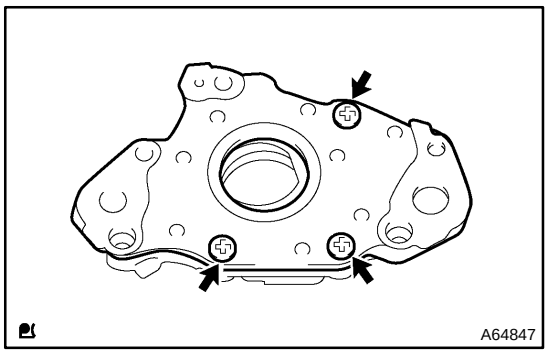

(h) Install the oil pump cover with 3 screws.
Torque: 10 N·m (105 kgf·cm, 8.0 ft·lbf)

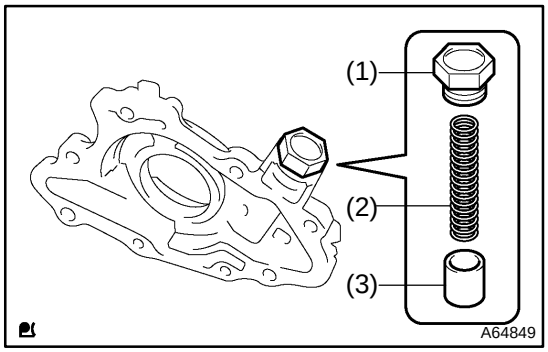

3. INSTALL OIL PUMP RELIEF VALVE

(a) Install the oil pump relief valve plug, oil pump relief valve spring and oil pump relief valve.
Torque: 37 N·m (375 kgf·cm, 27 ft·lbf)
(1) Oil pump relief valve plug
(2) Oil pump relief valve spring
(3) Oil pump relief valve

REPLACEMENT

1. DRAIN ENGINE OIL

(a) Remove the oil pan drain plug and drain the engine oil.

2. REMOVAL & INSTALLATION CHAIN SUB–ASSY(See page 14–82)

3. REMOVE CHAIN VIBRATION DAMPER NO.1

(a) Remove 2 bolts and chain vibration damper No. 1.

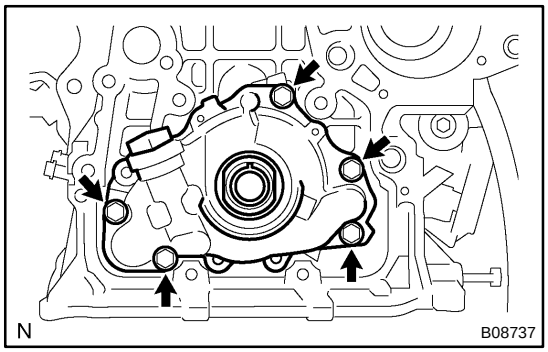

4. REMOVE OIL PUMP ASSY

(a) Remove the 5 bolts.

(b) Remove the oil pump assy and gasket.

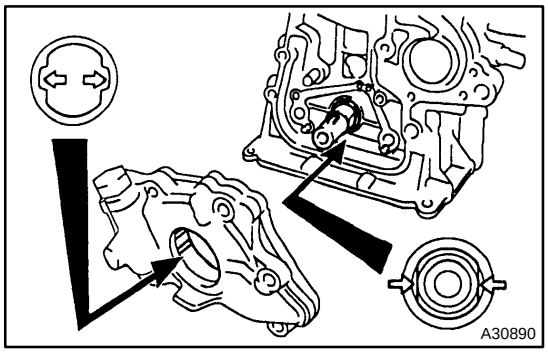

5. INSTALL OIL PUMP ASSY

(a) Place a new gasket on the cylinder block.

(b) Engage the spline teeth of the oil pump drive rotor with the large teeth of the crankshaft, and side the oil pump.

(c) Install the oil pump with the 5 bolts.
Torque: 9.0 N·m (92 kgf·cm, 80 in.·lbf)

6. INSTALL CHAIN VIBRATION DAMPER NO.1

(a) Install the chain vibration damper No. 1 with 2 bolts.
Torque: 9.0 N·m (92 kgf·cm, 8.0 in.·lbf)

7. INSTALL OIL PAN DRAIN PLUG

(a) Clean and install the oil pan drain plug with a new gasket.
Torque: 37 N·m (377 kgf·cm, 27 ft·lbf)

8. ADD ENGINE OIL
Capacity:
Drain and refill w/ Oil filter change 3.7 liters (3.9 US qts, 3.3 lmp. qts)
Drain and refill w/o Oil filter change 3.5 liters (3.7 US qts, 3.1 lmp. qts)
Dry fill 4.2 liters (4.4 US qts, 3.7 lmp. qts)

9. ADD COOLANT(Seepage 16–7)

10. INSPECT OIL LEAK

11. INSPECT CHECK ENGINE COOLANT LEAK(See page 16–1)

LUBRICATION SYSTEM (April, 2003)

1707J–03

ON–VEHICLE INSPECTION

1. CHECK ENGINE OIL LEVEL

(a) After warming up the engine and then 5 minutes after the engine stops, oil level should be between the ”L” and ”F” marks on the oil level gage.

If low, check for leakage and add oil up to the ”F” mark.

NOTICE:

Do not fill with engine oil above the ”F” mark.

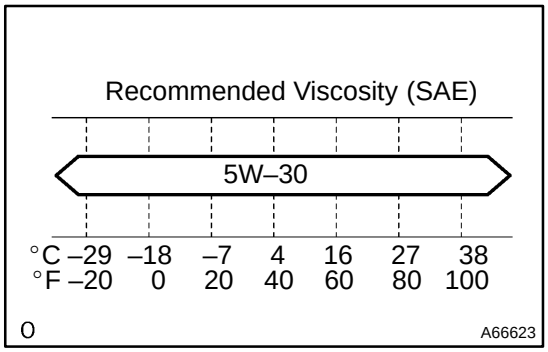

2. CHECK ENGINE OIL QUALITY

(a) Check the oil for deterioration, entry of water, discoloring or thinning.

If the quality is visibly poor, replace the oil.

Oil grade:

Use API grade SL ”Energy–Conserving”, or ILSAC multigrade engine oil.

SAE 5W–30 is the best choice for good fuel economy, and good starting in cold weather.

If SAE 5W–30 is not available, SAE 10W–30 may be used.

However, it should be replaced with SAE 5W–30 at the next oil replacement.

3. INSPECT OIL PRESSURE

(a) Disconnect the oil pressure switch connector.

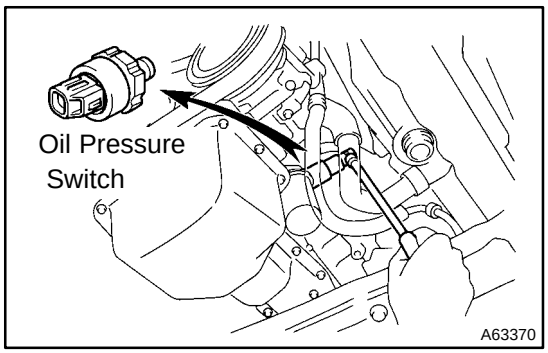

(b) Using a 24 mm deep socket wrench, remove the oil pressure switch.

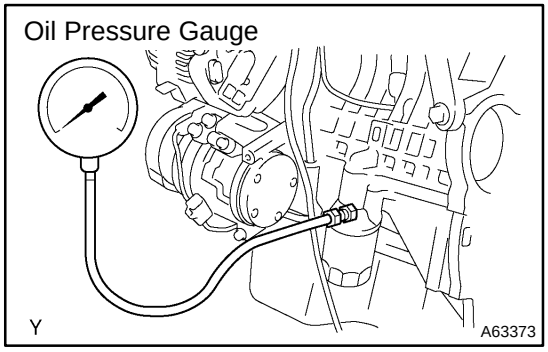

(c) Install the oil pressure gauge.

(d) Warm up the engine.

(e) Inspect the oil pressure.

Oil pressure:

At idle	29 kPa (0.3 kgf/cm^2, 4.2 psi) or more
At 3,000 rpm	294 to 539 kPa (3.0 to 5.5 kgf/cm^2, 43 to 78 psi)

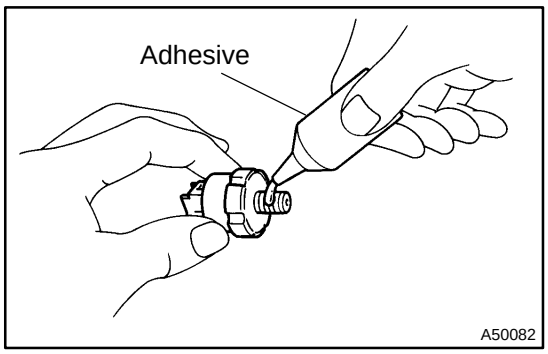

(f) Apply adhesive to 2 or 3 threads of the oil pressure switch.
Adhesive:
Part No. 08833–00080, THREE BOND 1344, LOCTITE 242 or equivalent

(g) Using a 24 mm deep socket wrench, install the oil pressure switch.
Torque: 15 N·m (153 kgf·cm, 11 ft·lbf)

(h) Connect the oil pressure switch connector.

(i) Check for the engine oil leaks.

1804C–01

INSPECTION

1. SPARK PLUG

NOTICE:

- **Never use a wire brush for cleaning.**
- **Never attempt to adjust the electrode gap on used spark plug.**
- **Spark plug should be replaced every 192,000 km (120,000 miles).**

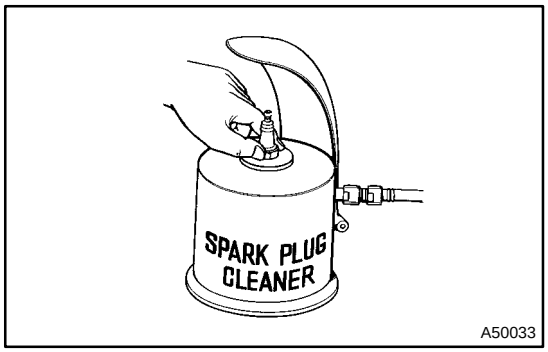

(a) Clean the spark plugs.
Air pressure: Below 588 kPa (6.0 kg/cm^2, 85 psi)
Duration: 20 seconds or less

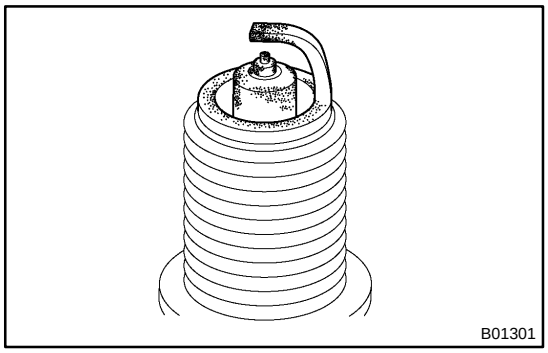

(b) Check the spark plug for thread damage and insulator damage.

HINT:

If abnormal, replace the spark plug.

Recommended spark plug:
SK16R11 (DENSO made)
IFR5A11 (NGK made)

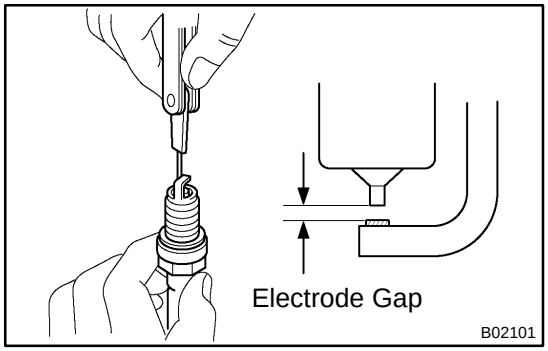

(c) Check the spark plug electrode gap.
Electrode gap: 1.1 mm (0.043 in.)

2. CRANK POSITION SENSOR NO.1

(a) Using an ohmmeter, measure the resistance between terminals.
RESISTANCE:
At cold 835 – 1,400 Ω
At hot 1,060 – 1,645 Ω

NOTICE:

"Cold" and "Hot" on the table express the temperature of the coils themselves. "Cold" is from –10°C (14°F) to 50°C (122°F) and "Hot" is from 50°C (122°F) to 100°C (212°F).

HINT:

If the resistance is not as specified, replace the crank position sensor No. 1.

3. CRANK POSITION SENSOR

(a) Using an ohmmeter, measure the resistance between terminals.

RESISTANCE:

At cold 1,630 – 2,740 Ω

At hot 2,065 – 3,225 Ω

NOTICE:

"Cold" and "Hot" on the table express the temperature of the coils themselves. "Cold" is from –10°C (14°F) to 50°C (122°F) and "Hot" is from 50°C (122°F) to 100°C (212°F).

HINT:

If the resistance is not as specified, replace the crank position sensor.

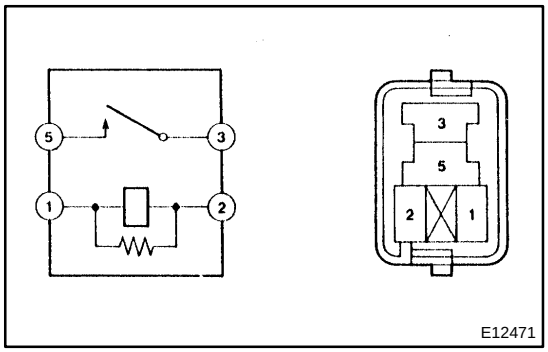

4. IGNITION RELAY

(a) Continuity inspection.

(1) Using an ohmmeter, check that continuity exists between each terminal.

Specified condition:

Between terminal 1 and 2 Continuity

Between terminal 3 and 5 No continuity

(2) Using an ohmmeter, check that continuity exists between terminals 3 and 5 when the battery voltage is applied across terminals 1 and 2.

IGNITION SYSTEM

1804B–01

ON–VEHICLE INSPECTION

NOTICE:

"Cold" and "Hot" in these sentences express the temperature of the coils themselves. "Cold" is from –10°C (14°F) to 50°C (122°F) and "Hot" is from 50°C (122°F) to 100°C (212°F).

1. INSPECT IGNITION COIL (WITH IGNITER) AND SPARK TEST

(a) Confirm DTC.

NOTICE:

If DTC is indicated, carry out troubleshooting in accordance with the procedure on the following DTC.

(b) Check that the spark occurs.

(1) Remove the ignition coils (with igniter).

(2) Using a 16 mm (0.63 in) plug wrench, remove the spark plugs.

(3) Install the spark plugs to each ignition coils (with igniter), and connect the ignition coil connectors.

(4) Disconnect the 4 injector connectors.

(5) Ground the spark plugs.

(6) Check if spark occurs while engine is being cranked.

NOTICE:

- **Be sure to ground the spark plug, when checking.**
- **Replace the ignition coil when it is given an impact.**
- **Do not crank the engine for more than 2 seconds.**

HINT:

If the spark does not occur, do the test as follow.

(c) Using a 16 mm (0.63 in.) plug wrench, install the spark plugs.

Torque: 25 N·m (255 kgf·cm, 18 ft·lbf)

(d) Install the ignition coil with igniter.

Torque: 9.0 N·m (92 kgf·cm, 80 in.·lbf)

190CB–01

COMPONENTS

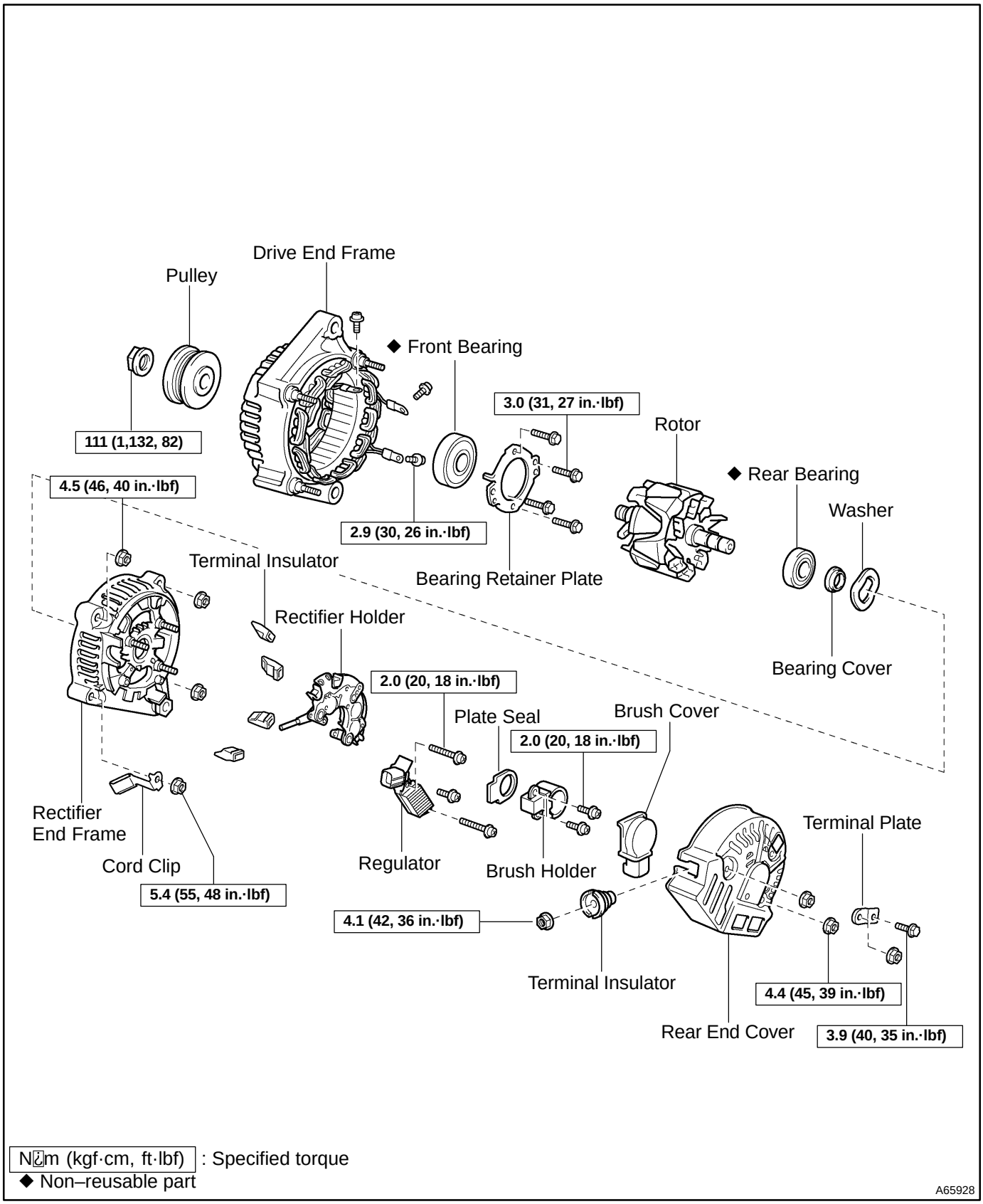

N⍿m (kgf·cm, ft·lbf) : Specified torque
◆ Non–reusable part

A65928

190CC–01

OVERHAUL

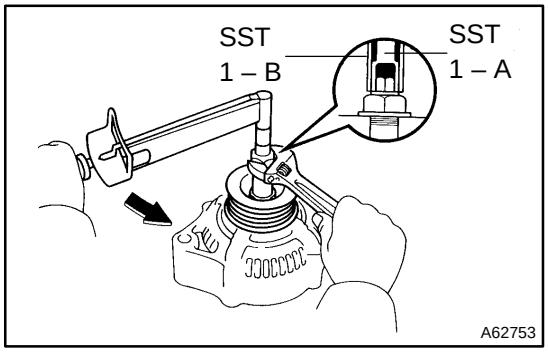

1. REMOVE GENERATOR PULLEY

SST 09820–63010 (09820–06010, 09820–06020)

HINT:

SST1 – A, B	09820–06010
SST2	09820–06020

(a) Hold SST 1 – A with a torque wrench, and tighten SST 1 – B clockwise to the specified torque.

Torque: 39 N·m (398 kgf·cm, 29 ft·lbf)

NOTICE:

Check that SST is secured to the rotor shaft.

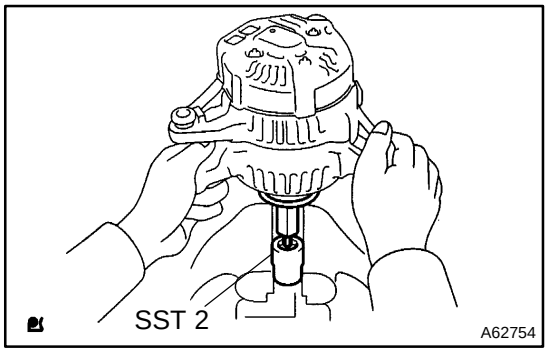

(b) Mount SST 2 in a vise.

(c) Insert SST 1 – A, B into SST 2, and attach the pulley nut to SST 2.

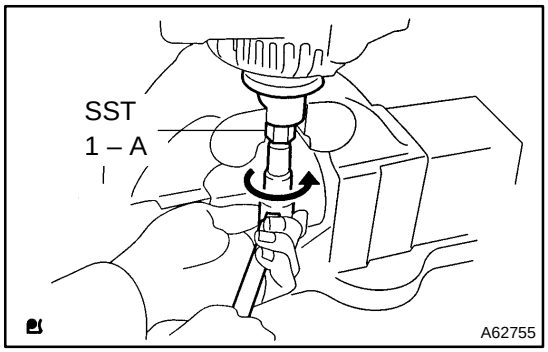

(d) To loosen the pulley nut, turn SST 1 – A in the direction shown in the illustration.

NOTICE:

To prevent damage to the rotor shaft, do not loosen the pulley nut more than one–half of a turn.

(e) Remove the alternator form SST 2.

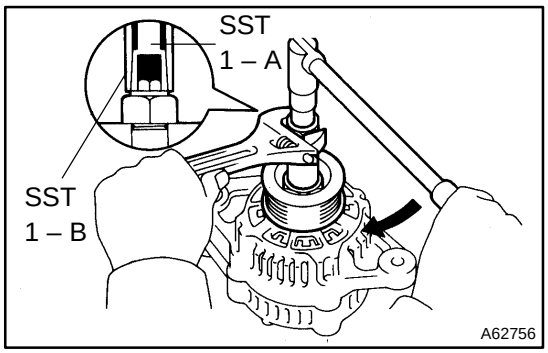

(f) Turn SST 1 – B, and remove SST 1 – A, B.

(g) Remove the pulley nut and pulley.

2. REMOVE GENERATOR BRUSH HOLDER ASSY

(a) Remove the nut and terminal insulator.
(b) Remove the screw, nut and terminal plate.
(c) Remove the 2 nuts and rear end cover.
(d) Remove the brush cover from the brush holder.
(e) Remove the 2 screw and brush holder.
(f) Remove the plate seal.

3. REMOVE GENERATOR REGULATOR ASSY

(a) Remove the 3 screws and regulator.

4. REMOVE GENERATOR HOLDER W/RECTIFIER

(a) Remove the 4 screws and holder w/ rectifier.

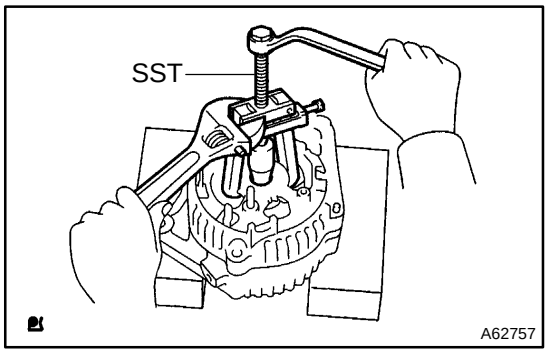

5. REMOVE GENERATOR RECTIFIER END FRAME

(a) Remove the plate seal from the rectifier end frame.
(b) Remove the 4 terminal insulator, 4 nuts and cord clip.
(c) Using SST, remove the rectifier end frame.
SST 09286–46011

6. REMOVE GENERATOR ROTOR ASSY

(a) Remove the washer from the rotor.
(b) Remove the rotor from drive end frame.

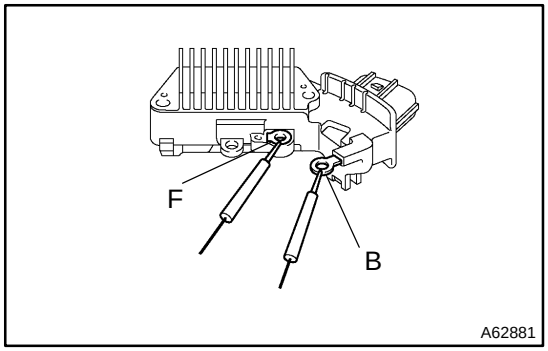

7. INSPECT GENERATOR REGULATOR ASSY

(a) Using an ohmmeter, check the continuity between terminals F and B.
Standard:
When the positive and negative poles between terminals F and B are exchanged, there is continuity in one way but no continuity in another way.

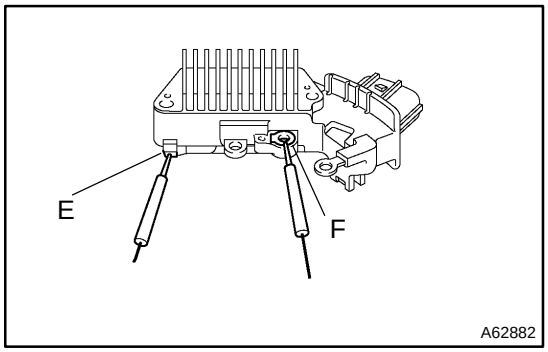

(b) Using an ohmmeter, check the continuity between terminals F and E.
Standard:
When the positive and negative poles between terminals F and E are exchanged, there is continuity in one way but no continuity in another way.

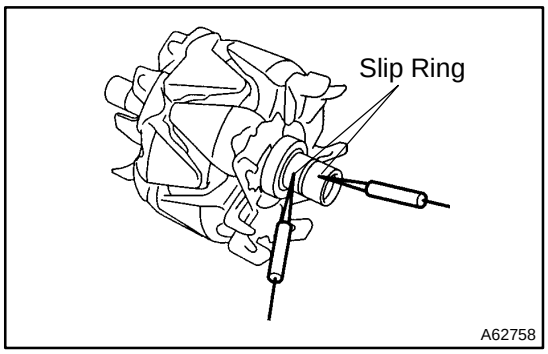

8. INSPECT GENERATOR REGULATOR ASSY

(a) Using an ohmmeter, check that there is continuity between the slip rings.
Standard resistance: 2.1 – 2.5 Ω at 20°C (68°F)

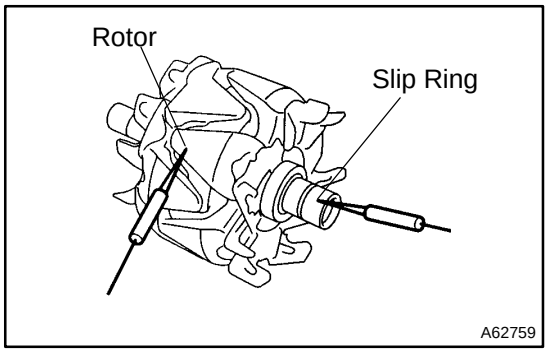

(b) Using an ohmmeter, check that there is no continuity between the slip ring and rotor.

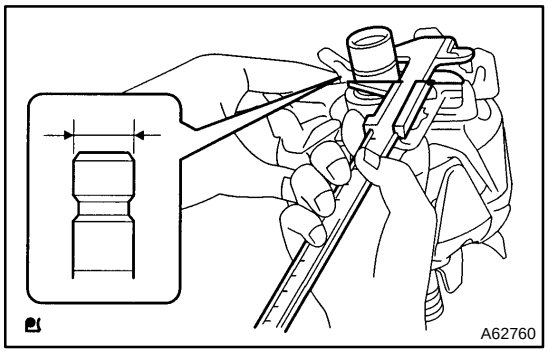

(c) Using a vernier calipers, measure the slip ring diameter.
Standard diameter: 14.2 – 14.4 mm (0.559 – 0.567 in.)
Minimum diameter: 12.8 mm (0.504 in.)

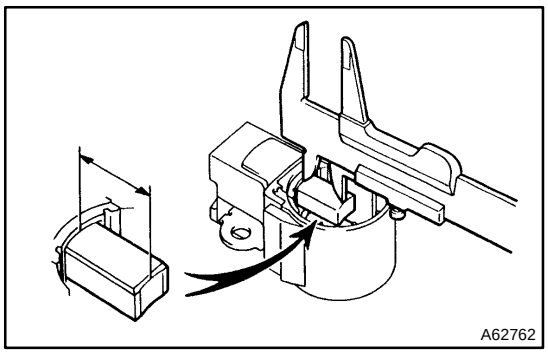

9. INSPECT BRUSH

(a) Using a vernier calipers, measure the exposed brush length.
Standard exposed length:
9.5 – 11.5 mm (0.374 – 0.453 in.)
Minimum exposed length: 1.5 mm (0.059 in.)

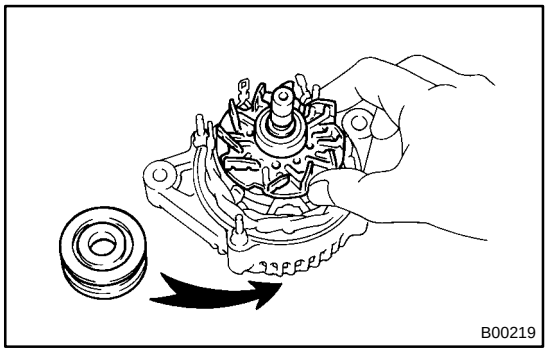

10. INSTALL GENERATOR ROTOR ASSY

(a) Install the rotor to the drive end frame.
(b) Install the washer on the rotor.

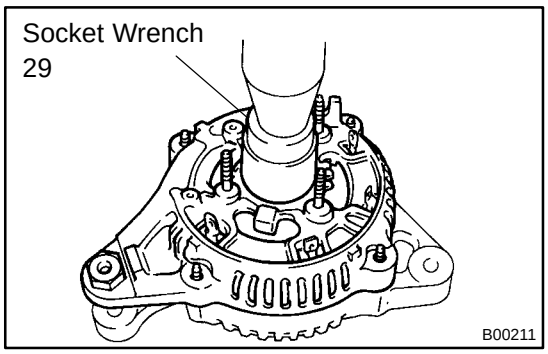

(c) Using a socket wrench 29 and press, slowly press in the rectifier end frame.

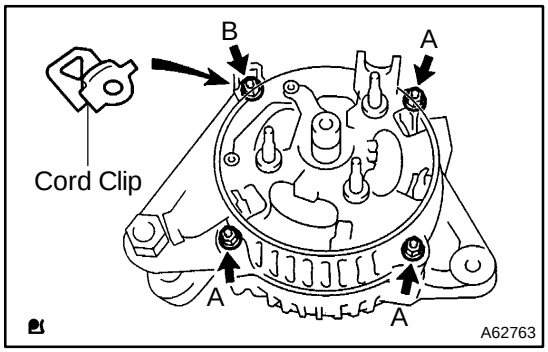

(d) Install the cord clip and 4 nuts.
Torque:
Nut A 4.5 N·m (46 kgf·cm, 40 in.·lbf)
Nut B 5.4 N·m (55 kgf·cm, 48 in.·lbf)

11. INSTALL GENERATOR HOLDER W/RECTIFIER

(a) Install the holder w/ rectifier with 4 screws.
Torque: 2.9 N·m (30 kgf·cm, 26 in.·lbf)

12. INSTALL GENERATOR REGULATOR ASSY

(a) Install the regulator with the 3 screw.
Torque: 2.0 N·m (20 kgf·cm, 18 in.·lbf)

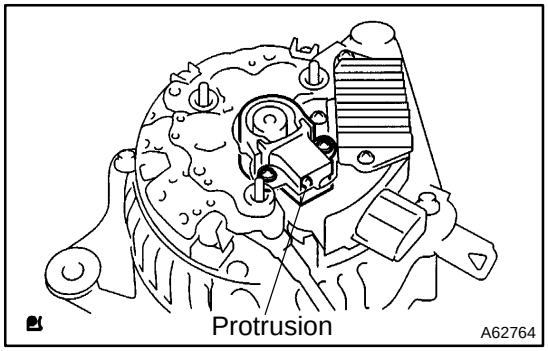

13. INSTALL GENERATOR BRUSH HOLDER ASSY

(a) Place the plate seal on the brush holder.
(b) Install the brush holder with the 2 screws.
Torque: 2.0 N·m (20 kgf·cm, 18 in.·lbf)

NOTICE:
Pay attention to the holder installation direction.

(c) Place the brush cover on the brush holder.
(d) Install the rear end cover with the 2 nuts.
Torque: 4.4 N·m (45 kgf·cm, 39 in.·lbf)
(e) Install the terminal plate with the screw and nut.
Torque:
Bolt 3.9 N·m (40 kgf·cm, 35 in.·lbf)
Nut 4.4 N·m (45 kgf·cm, 39 in.·lbf)
(f) Install the terminal insulator withe the nut.
Torque: 4.1 N·m (42 kgf·cm, 36 in.·lbf)

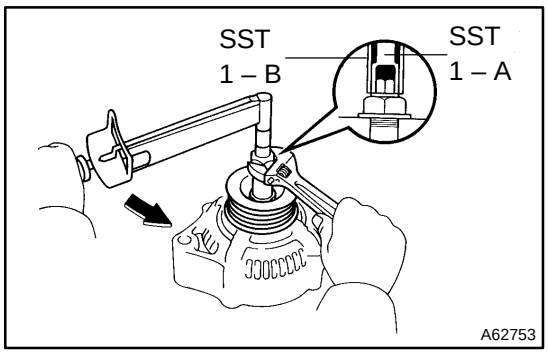

14. INSTALL GENERATOR PULLEY

SST 09820–63010 (09820–06010, 09820–06020)

HINT:

SST1 – A, B	09820–06010
SST2	09820–06020

(a) Install the pulley to the rotor shaft by tightening the pulley nut by hand.

(b) Hold SST 1 – A with a torque wrench, and tighten SST 1 – B clockwise to the specified torque.

Torque: 39 N·m (398 kgf·cm, 29 ft·lbf)

NOTICE:

Check that SST is secured to the pulley shaft.

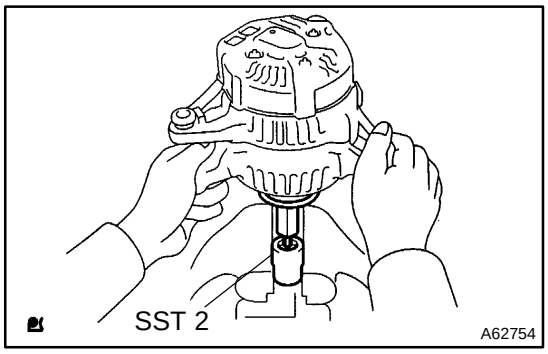

(c) Mount SST 2 in a vise.

(d) Insert SST 1 – A, B into SST 2, and attach the pulley nut to SST 2.

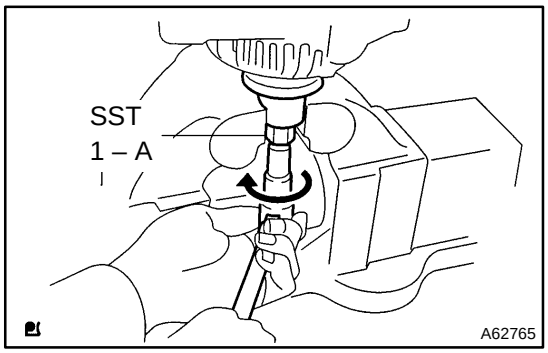

(e) Tighten the pulley nut, turn SST 1 – A in the direction shown in the illustration.

Torque: 111 N·m (1,132 kgf·cm, 82 ft·lbf)

(f) Remove the alternator form SST 2.

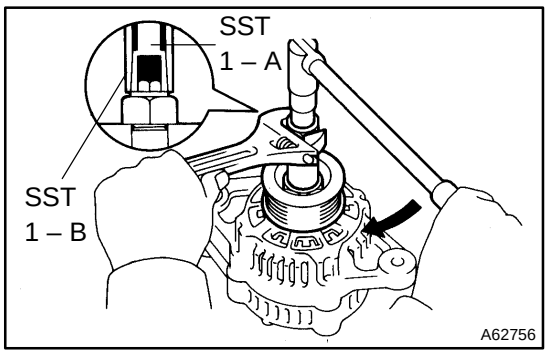

(g) Turn SST 1 – B, and remove SST 1 – A, B.

(h) Turn the pulley, and check that the pulley moves smoothly.

GENERATOR ASSY

190CA–01

REPLACEMENT

1. REMOVE ENGINE UNDER COVER RH

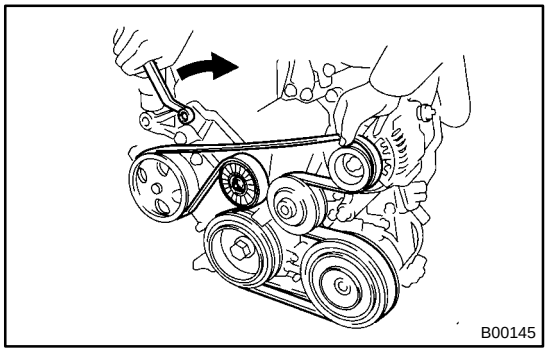

2. REMOVE FAN AND GENERATOR V BELT

(See page 14–4)

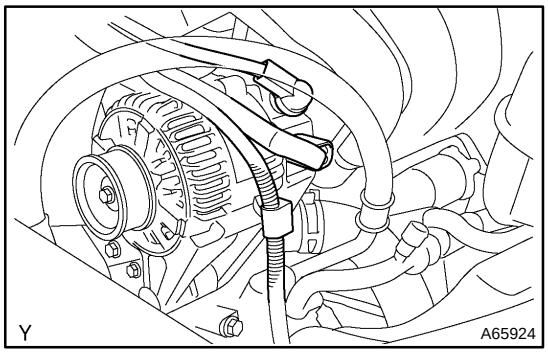

3. REMOVE GENERATOR ASSY

(a) Disconnect the wire clamp from the wire clip on the rectifire end frame.

(b) Remove the rubber cap and nut, and disconnect the alternator wire.

(c) Disconnect the alternator connector.

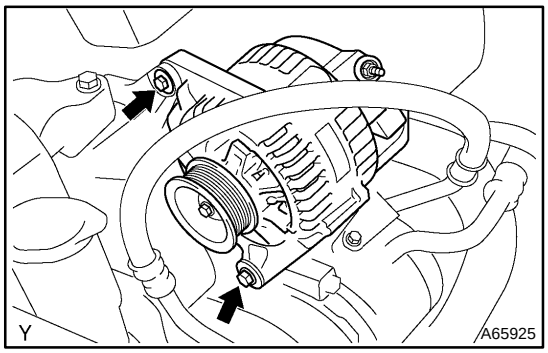

(d) Remove the 2 bolts and alternator.

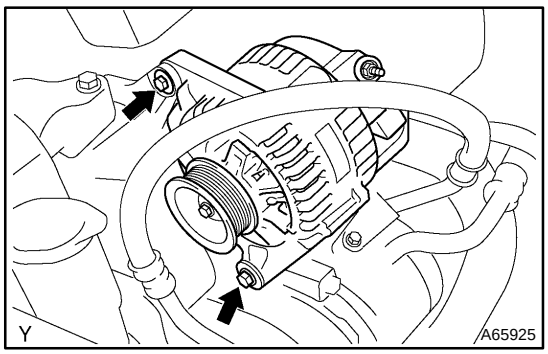

4. INSTALL GENERATOR ASSY

Torque:
12 mm head 25 N·m (250 kgf·cm, 18 ft·lbf)
14 mm head 54 N·m (550 kgf·cm, 39 ft·lbf)

STARTING SYSTEM (1ZZ–FE) (April, 2003)

190QO–02

INSPECTION

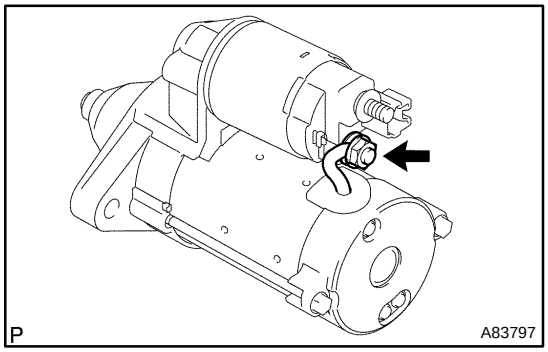

1. INSPECT STARTER ASSY

NOTICE:

These tests must be performed within 3 to 5 seconds to prevent burnout of the coil.

(a) Perform the pull–in test.

(1) Remove the nut, then disconnect the lead wire from terminal C.

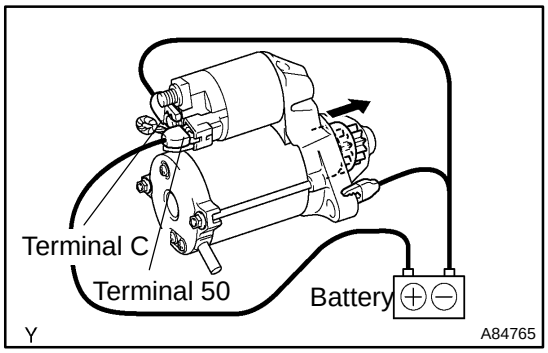

(2) Connect the battery to the starter repair service kit as shown in the illustration. Check that the clutch pinion gear is extended.

If the clutch pinion gear is not extended, replace the starter repair service kit.

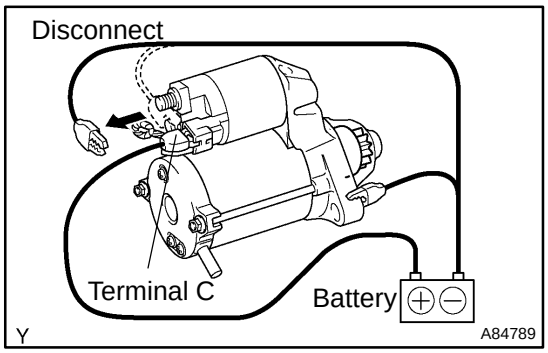

(b) Perform the hold–in test.

(1) Disconnect the negative (–) lead from terminal C with the lead wire disconnected from terminal C. Check that the clutch pinion gear remains extended.

If the clutch pinion gear returns, replace the starter repair service kit.

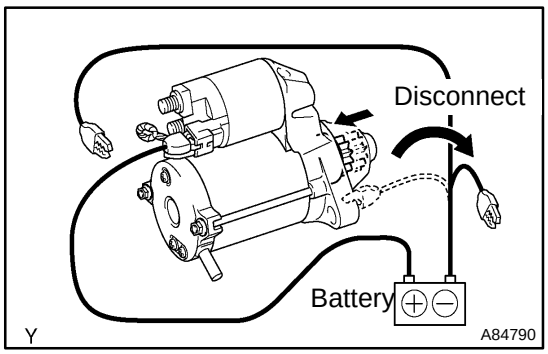

(c) Check the clutch pinion gear returns.

(1) Disconnect the negative (–) lead from the starter body. Check that the clutch pinion gear returns.

If the clutch pinion gear does not return, replace the starter repair service kit.

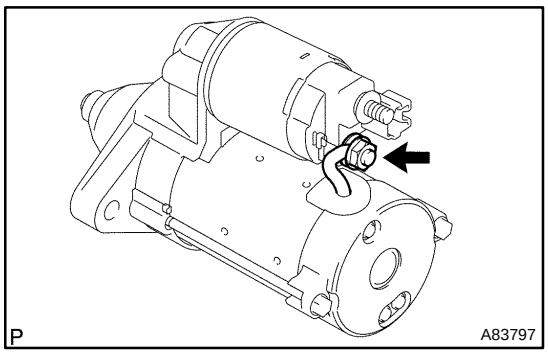

(d) Perform the no–load performance test.

(1) Connect the lead wire to terminal C with the nut. Make sure that the lead is not grounded.

Torque: 10 N·m (102 kgf·cm, 7 ft·lbf)

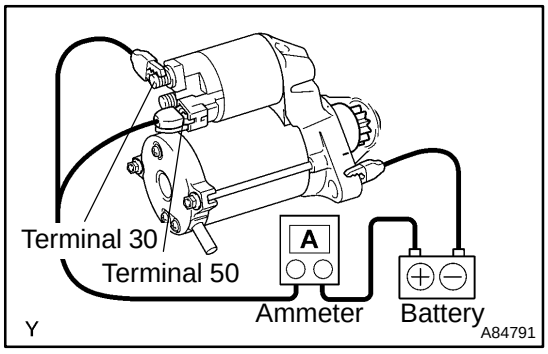

(2) Clamp the starter in a vise.

(3) Connect the battery and an ammeter to the starter as shown in the illustration.

(4) Check that the starter rotates smoothly and steadily with the clutch pinion gear extended. Check that the ammeter reads the specified current.

Specified current: 90 A or less at 11.5 V

If the current is not as specified, replace the starter repair service kit.

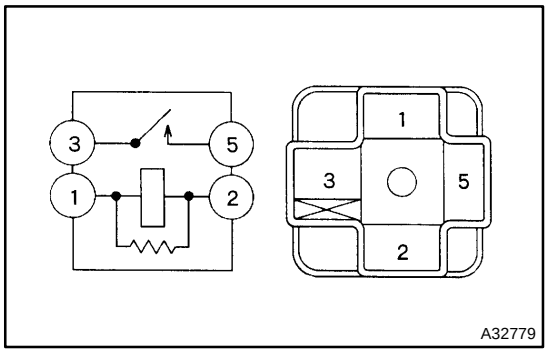

2. INSPECT STARTER RELAY ASSY

(a) Check the continuity.

(1) Using an ohmmeter, check for continuity between each terminal.

Specified condition:

Tester Connection	Specified Condition
1 – 2	Continuity
3 – 5	No Continuity
3 – 5	Continuity (Apply battery voltage to terminals 1 and 2)

If the result is not as specified, replace the starter relay.

190C9–01

ON–VEHICLE INSPECTION

1. CHECK BATTERY ELECTROLYTE LEVEL

(a) Check the electrolyte quantity of each cell (Maintenance–Free Battery).
  (1) If under the lower level, replace the battery (or add distilled water if possible) and check the charging system.

(b) Check the electrolyte quantity of each cell (Except Maintenance–Free Battery).
  (1) If under the lower level, add distilled water.

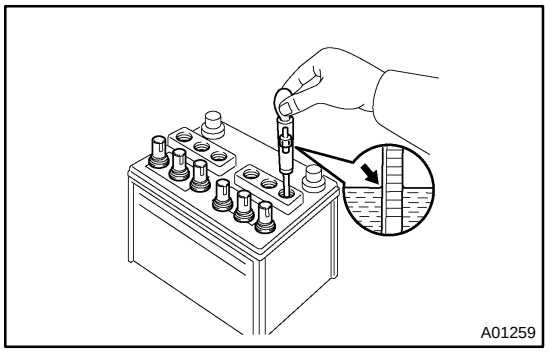

2. CHECK BATTERY SPECIFIC GRAVITY (Except Maintenance–Free Battery)

(a) Check the specific gravity of each cell.
  Standard specific gravity: 1.25 – 1.29 at 20°C (68°F)

HINT:
If the specific gravity is less than specification, charge the battery.

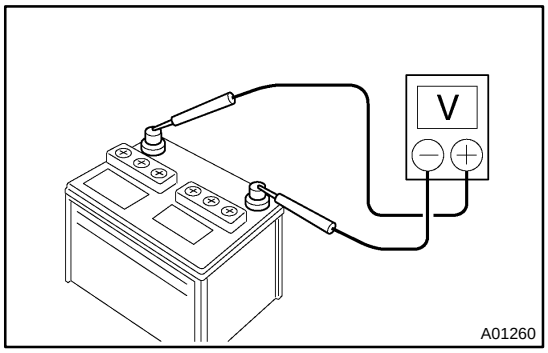

3. CHECK BATTERY VOLTAGE

(a) After having driven the vehicle and in the case that 20 minutes have not passed after having stopped the engine, turn the ignition switch ON and turn on the electrical system (headlight, blower motor, rear defogger etc.) for 60 seconds to remove the surface charge.
(b) Turn the ignition switch OFF and turn off the electrical systems.
(c) Measure the battery voltage between the negative (–) and positive (+) terminals of the battery.
  Standard voltage: 12.5 – 12.9 V at 20°C (68°F)

HINT:
If the voltage is less than specification, charge the battery.

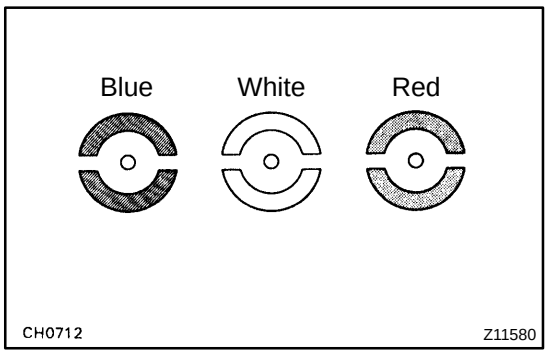

(d) Check the indicator as shown in the illustration.

HINT:
- Blue: OK
- White: Charging Necessary
- Red: Insufficient Water

4. CHECK BATTERY TERMINALS, FUSIBLE LINK AND FUSES

(a) Check that the battery terminals are not loose or corroded.
(b) Check the fusible link, H–fuses and fuses for continuity.

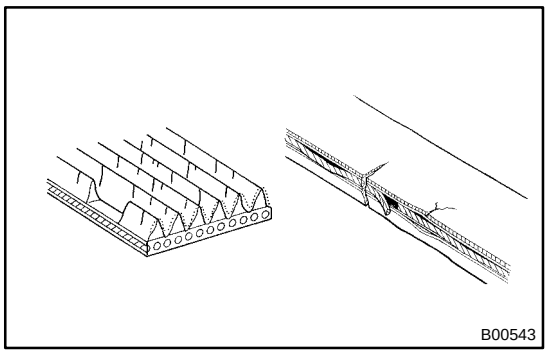

5. INSPECT DRIVE BELT

(a) Visually check the belt for excessive wear, frayed cords etc.

HINT:

- If any defect has been found, replace the drive belt.
- Cracks on the rib side of a belt are considered acceptable. If the belt has chunks missing from the ribs, it should be replaced.

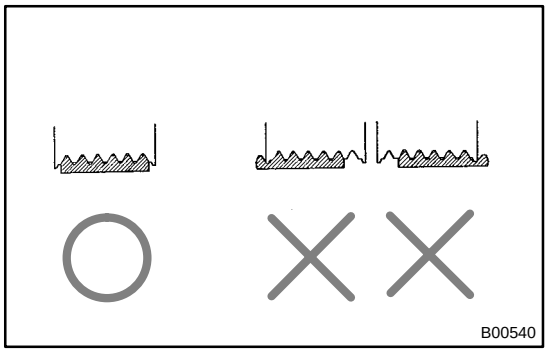

(b) Check that it fits properly in the ribbed grooves.

HINT:

Check with your hand to confirm that the belt has not slipped out of the groove on the bottom of the pulley.

6. VISUALLY CHECK ALTERNATOR WIRING

(a) Check that the wiring is in good condition.

7. LISTEN FOR ABNORMAL NOISES FROM ALTERNATOR

(a) Check that there is no abnormal noise from the alternator while the engine is running.

8. INSPECT CHARGE WARNING LIGHT CIRCUIT

(a) Turn the ignition switch ON. Check that the charge warning light comes on.

(b) Start the engine. Check that the light goes off.

HINT:

If the light does not operate as specified, troubleshoot the charge warning light circuit.

9. INSPECT CHARGING CIRCUIT WITHOUT LOAD

(a) If a battery/alternator tester is available, connect the tester to the charging circuit as permanufacturer's instructions.

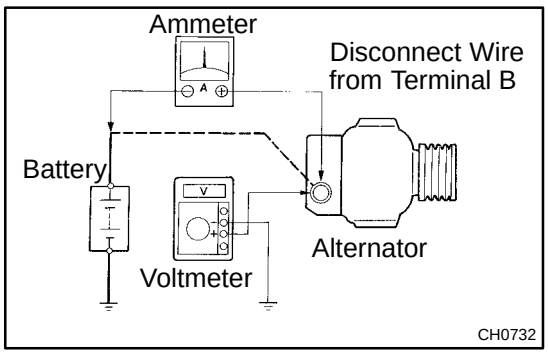

(b) If a tester is not available, connect a voltmeter to the charging circuit as follows.

(1) Disconnect to the wire from terminal B of the alternator and connect it to the negative (–) lead of the ammeter.

(2) Connect the positive (+) lead of the ammeter to terminal B of the alternator.

(3) Connect the positive (+) lead of the voltmeter to terminal B of the alternator.

(4) Ground the negative (–) lead of the voltmeter.

(c) Check the charging circuit (DENSO made).

(1) With the engine running from idle to 2,000 rpm, check the reading on the ammeter and voltmeter.

Standard amperage: 10 A or less

Standard voltage: 12.9 – 14.9 V

10. INSPECT CHARGING CIRCUIT WITH LOAD

(a) With the engine running at 2,000 rpm, turn on the high beam headlights and place the heater blower switch at ”HI”.

(b) Check the reading on the ammeter.

Standard amperage: 30 A or more

HINT:

- If the ammeter reading is less than standard amperage, repair the alternator.
- If the battery is fully charged, the indication will sometimes be less than standard amperage.

CHARGING SYSTEM

190C8–01

PRECAUTION

1. **Check that the battery cables are connected to the correct terminals.**
2. **Disconnect the battery cables when the battery is given a quick charge.**
3. **Do not perform tests with a high voltage insulation resistance tester.**
4. **Never disconnect the battery while the engine is running.**
5. **Check that the charging cable is tightened on terminal B of the alternator and the fuse box.**
6. **Do not check whether the alternator generates or not with connecting terminal F to other terminal.**

STARTER ASSY (1ZZ–FE) (April, 2003)

190QP–02

COMPONENTS

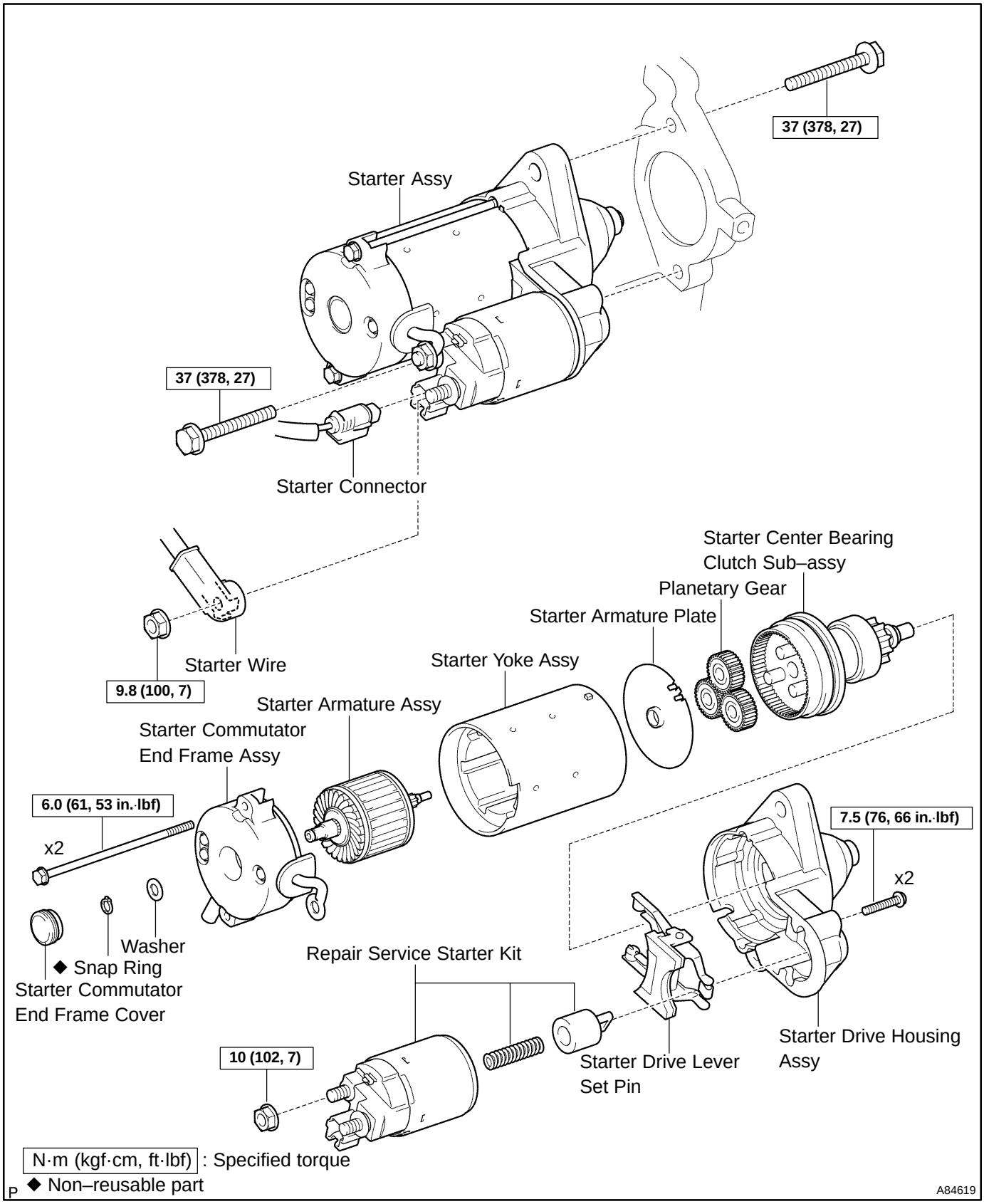

OVERHAUL

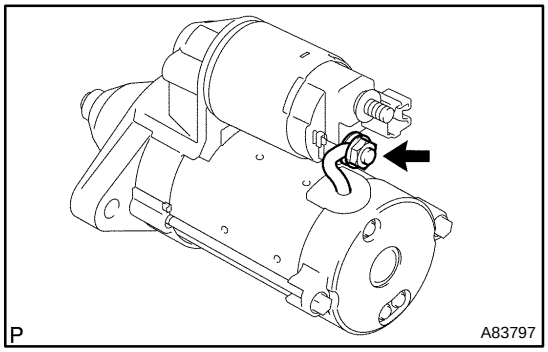

1. REMOVE REPAIR SERVICE STARTER KIT

(a) Remove the nut, then disconnect the lead wire from terminal C.

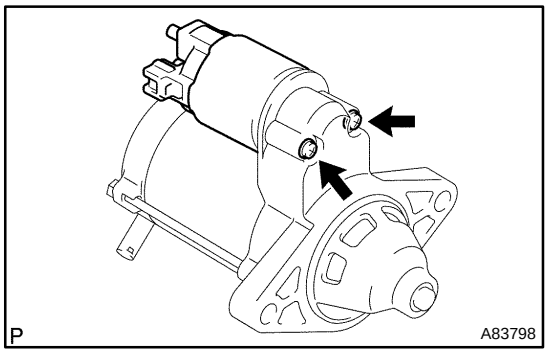

(b) Remove the 2 screws which are used to secure the repair service starter kit to the starter drive housing.

(c) Remove the repair service starter kit.

(d) Remove the return spring and plunger from the starter drive housing.

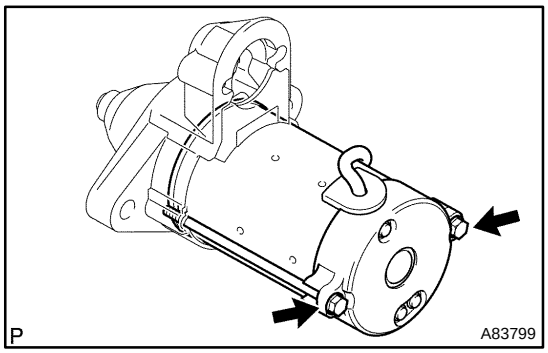

2. REMOVE STARTER YOKE ASSY

(a) Remove the 2 through bolts, then pull out the starter yoke together with the starter commutator end frame.

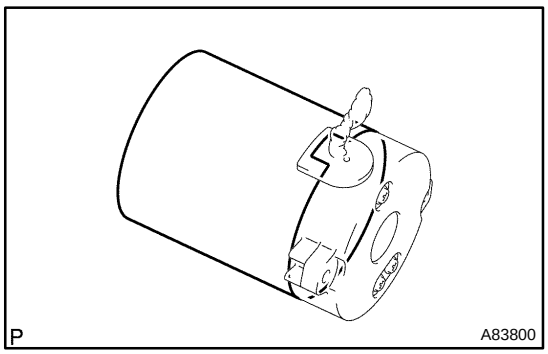

(b) Remove the starter yoke from the starter commutator end frame.

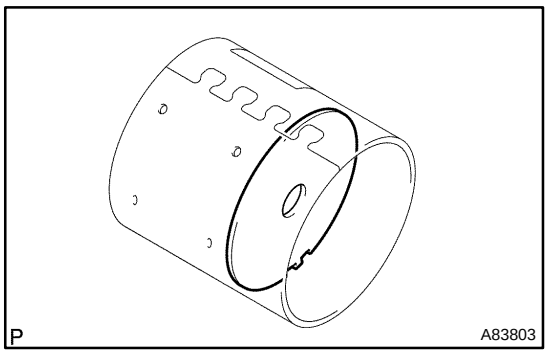

3. REMOVE STARTER ARMATURE PLATE

(a) Remove the starter armature plate from the starter yoke.

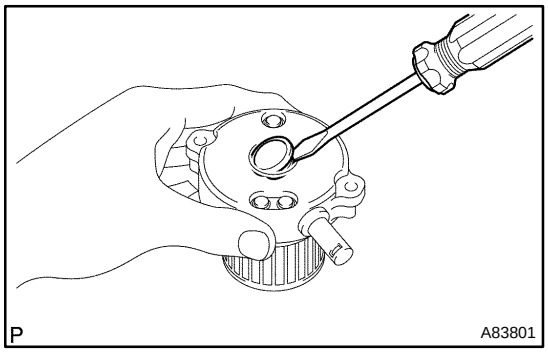

4. REMOVE STARTER COMMUTATOR END FRAME COVER

(a) Using a screwdriver, remove the starter commutator end frame cover.

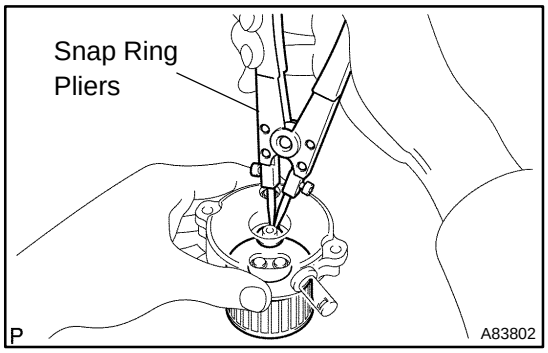

5. REMOVE STARTER ARMATURE ASSY

(a) Using snap ring pliers, remove the snap ring.

(b) Remove the washer and starter armature from the starter commutator end frame.

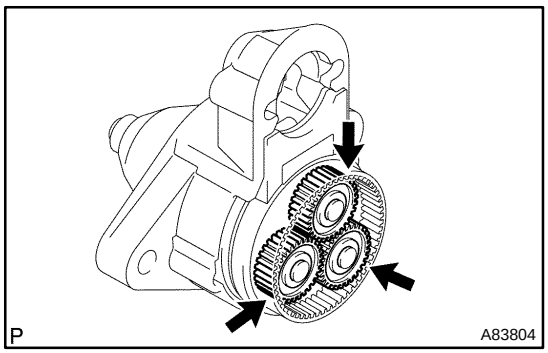

6. REMOVE PLANETARY GEAR

(a) Remove the 3 planetary gears from the starter center bearing clutch.

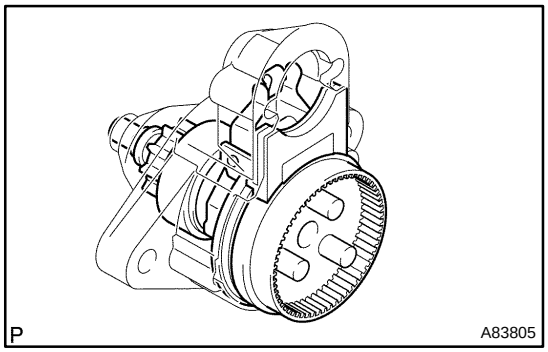

7. REMOVE STARTER CENTER BEARING CLUTCH SUB–ASSY

(a) Remove the starter center bearing clutch together with the starter drive lever set pin from the starter drive housing.

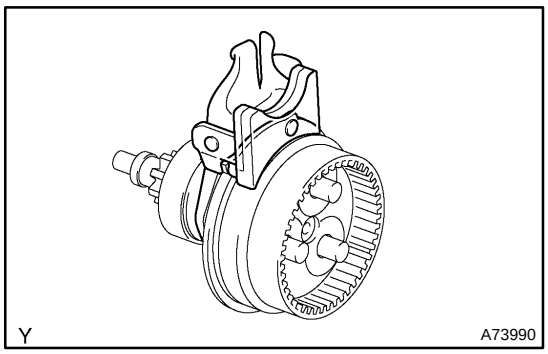

8. REMOVE STARTER DRIVE LEVER SET PIN

(a) Remove the starter drive lever set pin from the starter center bearing clutch.

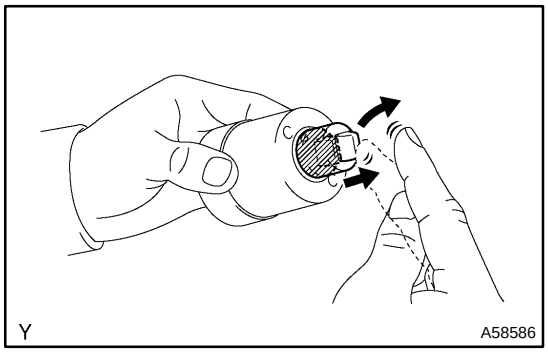

9. INSPECT REPAIR SERVICE STARTER KIT

(a) Check the operation.

(1) Push in the plunger, then check that it returns quickly to its original position.

If necessary, replace the repair service starter kit.

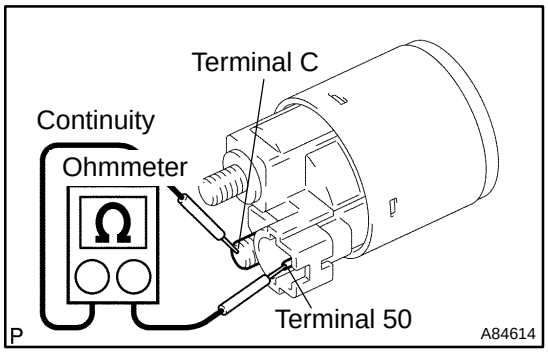

(b) Check the continuity.

(1) Using an ohmmeter, check that there is continuity between terminals 50 and C.

If there is no continuity, replace the repair service starter kit.

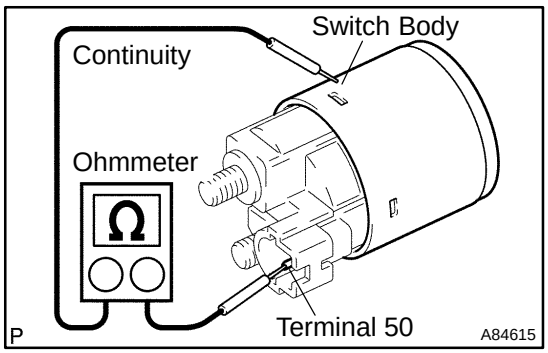

(2) Using an ohmmeter, check that there is continuity between terminal 50 and the switch body.

If there is no continuity, replace the repair service starter kit.

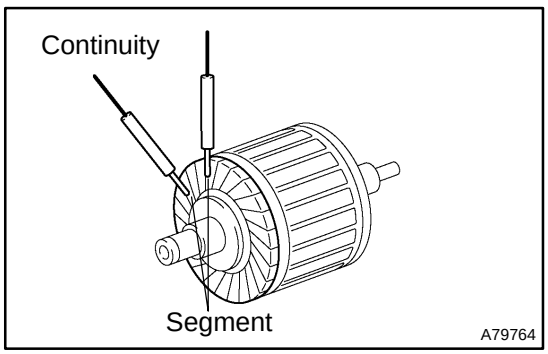

10. INSPECT STARTER ARMATURE ASSY

(a) Check the continuity.

(1) Using an ohmmeter, check that there is continuity between the segments of the commutator.

If there is no continuity between any segments, replace the starter armature.

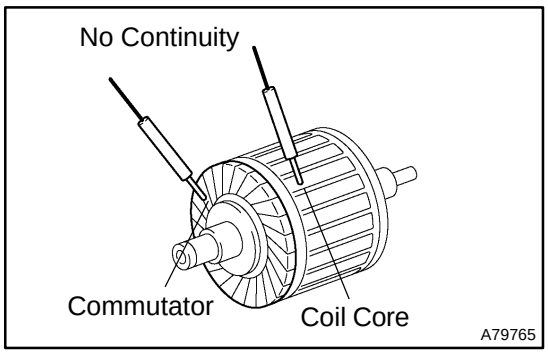

(2) Using an ohmmeter, check that there is no continuity between the commutator and armature coil core.

If there is continuity, replace the starter armature.

(b) Check the commutator surface for dirt or burn.

If the surface is dirty or burnt, smooth the surface with 400–grit sandpaper or lathe.

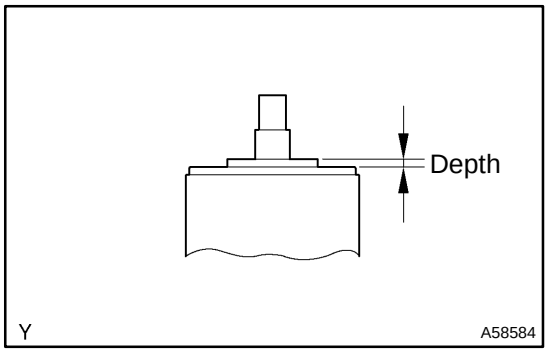

(c) Check the commutator depth.

(1) Using vernier calipers, measure the commutator depth.

Standard depth: 3.1 mm (0.122 in.)

Maximum depth: 3.8 mm (0.150 in.)

If the depth is greater than maximum, replace the starter armature.

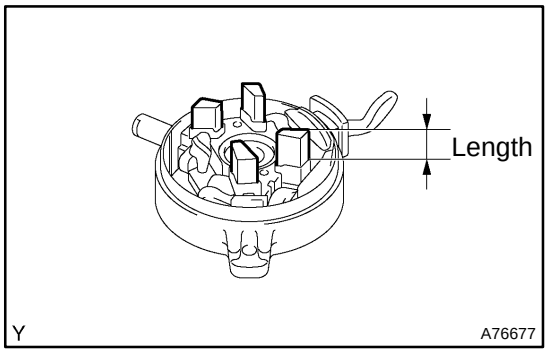

11. INSPECT STARTER COMMUTATOR END FRAME ASSY

(a) Check the brush length.

(1) Using vernier calipers, measure the brush length.

Standard length: 9.0 mm (0.354 in.)

Minimum length: 4.0 mm (0.158 in.)

If the length is less than minimum, replace the starter commutator end frame.

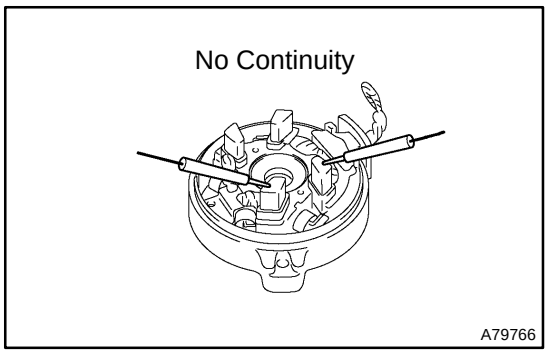

(b) Check the continuity.

(1) Using an ohmmeter, check that there is no continuity between the positive (+) and negative (–) brush.

If there is continuity, repair or replace the starter commutator end frame.

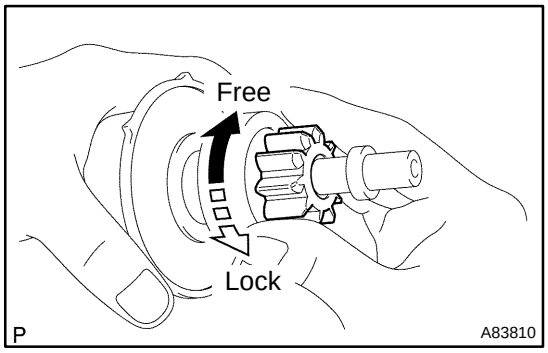

12. INSPECT STARTER CENTER BEARING CLUTCH SUB–ASSY

(a) Check the starter clutch.

(1) Rotate the clutch pinion gear clockwise, then check that it turns freely. Try to rotate the clutch pinion gear counterclockwise, then check that it locks.

If necessary, replace the starter center bearing clutch.

(b) Check the wear or damage.
(1) Inspect the gear teeth on the planetary gear, internal gear and starter clutch for wear or damage.

If damaged, replace the starter center bearing clutch.

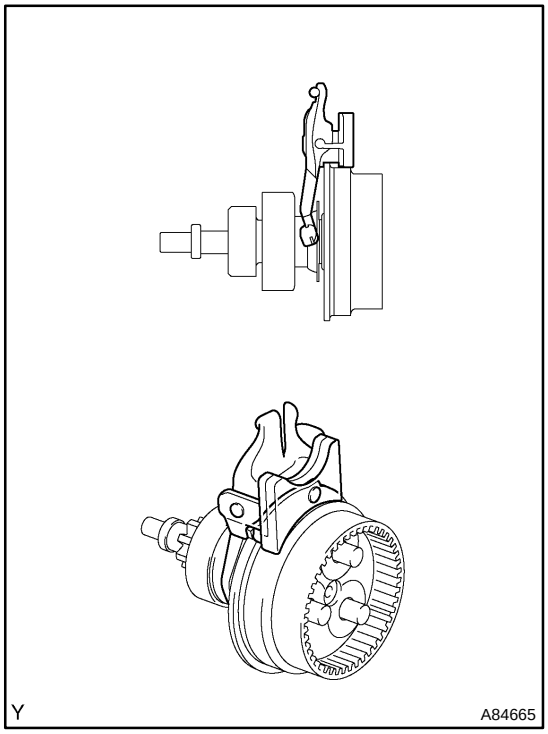

13. INSTALL STARTER DRIVE LEVER SET PIN

(a) Install the starter drive lever set pin to the starter center bearing clutch as shown in the illustration.

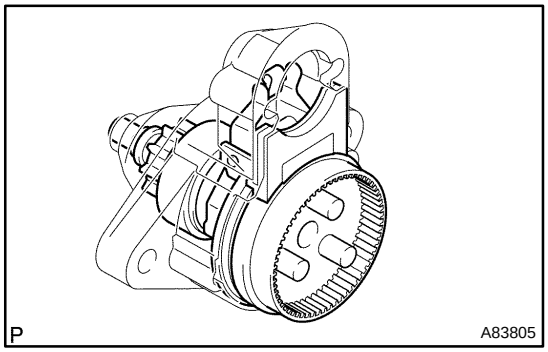

14. INSTALL STARTER CENTER BEARING CLUTCH SUB–ASSY

(a) Install the starter center bearing clutch together with the starter drive lever set pin to the starter drive housing.

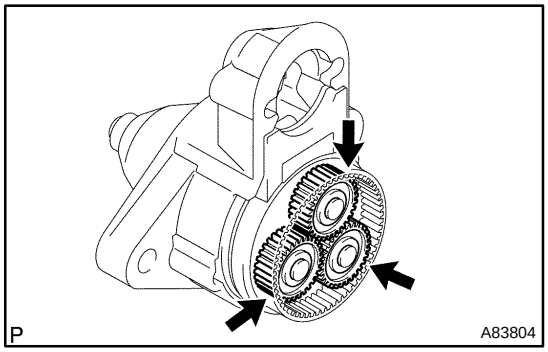

15. INSTALL PLANETARY GEAR

(a) Apply grease to the planetary gears and pin parts of the planetary shaft.

(b) Install the 3 planetary gears to the starter center bearing clutch.

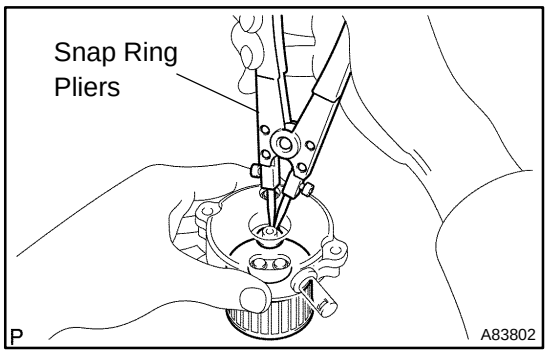

16. INSTALL STARTER ARMATURE ASSY

(a) Apply grease to the washer and the armature shaft.

(b) Install the starter armature and the washer to the starter commutator end frame.

(c) Using snap ring pliers, install a new snap ring.

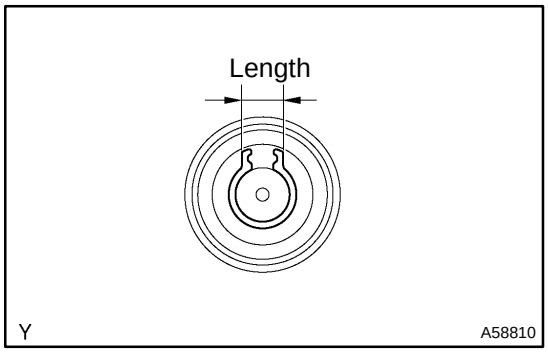

(d) Check the snap ring length.

(1) Using vernier calipers, measure the snap ring length.

Maximum length: 5.0 mm (0.197 in.)

If the length is greater than maximum, replace it with a new snap ring.

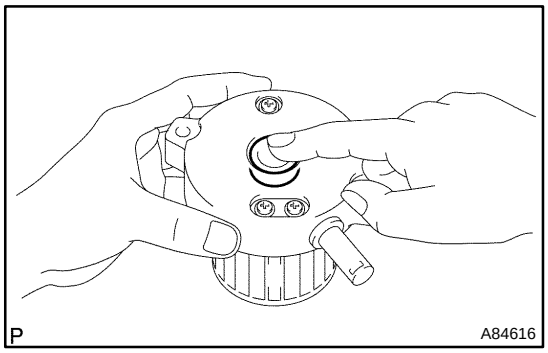

17. INSTALL STARTER COMMUTATOR END FRAME COVER

(a) Install the starter commutator end frame cover to the starter commutator end frame.

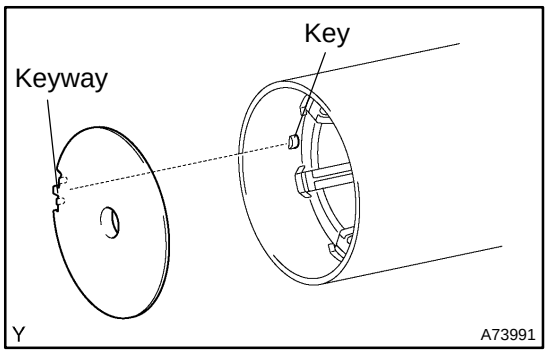

18. INSTALL STARTER ARMATURE PLATE

(a) Align the keyway of the starter armature plate with the key inside the starter yoke, then install the armature plate to the starter yoke.

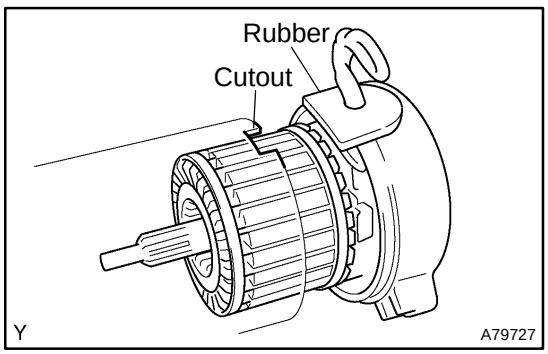

19. INSTALL STARTER COMMUTATOR END FRAME ASSY

(a) Align the rubber with the cutout of the starter yoke, then install the starter commutator end frame to the starter yoke.

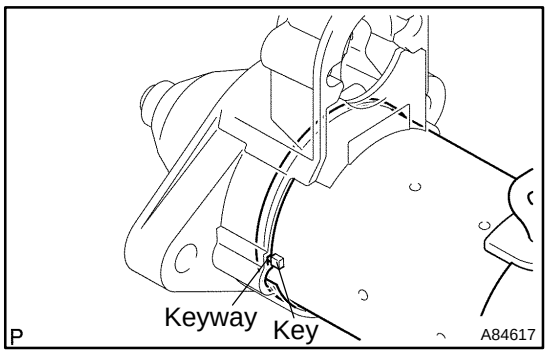

20. INSTALL STARTER YOKE ASSY

(a) Align the key of the starter yoke with the keyway of the starter drive housing, then install the starter yoke to the starter drive housing.

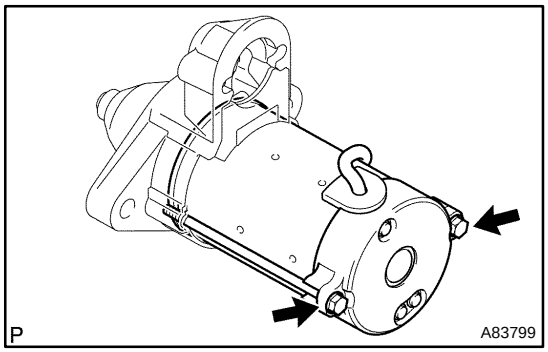

(b) Tighten the 2 through bolts.
Torque: 6.0 N·m (61 kgf·cm, 53 in.·lbf)

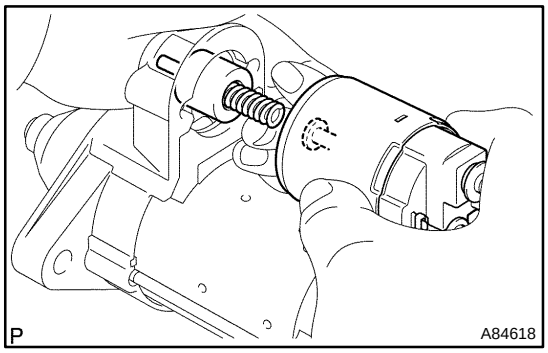

21. INSTALL REPAIR SERVICE STARTER KIT

(a) Apply grease to the plunger and hook.

(b) Hang the plunger hook of the repair service starter kit to the starter drive lever set pin.

(c) Install the plunger and return spring.

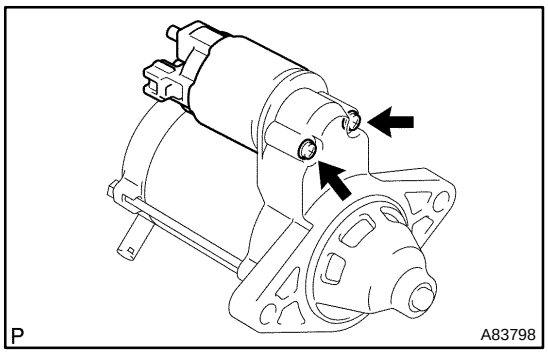

(d) Install the repair service starter kit with the 2 screws.
Torque: 7.5 N·m (76 kgf·cm, 66 in.·lbf)

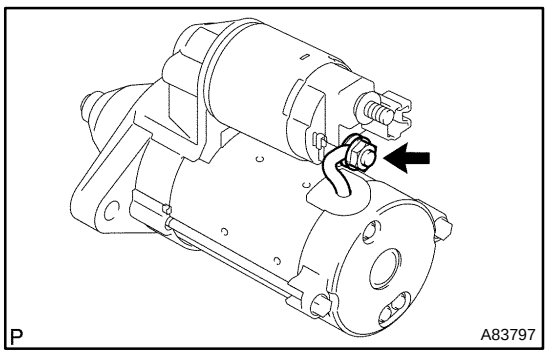

(e) Connect the lead wire to terminal C with the nut.
Torque: 10 N·m (102 kgf·cm, 7 ft·lbf)

190QQ–02

REPLACEMENT

1. DISCONNECT BATTERY NEGATIVE TERMINAL

2. REMOVE ENGINE UNDER COVER RH

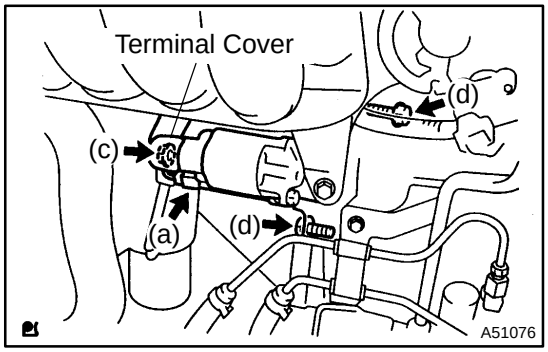

3. REMOVE STARTER ASSY

(a) Disconnect the starter connector.

(b) Open the terminal cover.

(c) Remove the nut, then disconnect the starter wire.

(d) Remove the 2 bolts, then remove the starter.

4. INSTALL STARTER ASSY

Torque:
37 N·m (378 kgf·cm, 27 ft·lbf) for bolt
9.8 N·m (100 kgf·cm, 7 ft·lbf) for nut

5. INSTALL ENGINE UNDER COVER RH

6. CONNECT BATTERY NEGATIVE TERMINAL

Torque: 5.4 N·m (55 kgf·cm, 48 in.·lbf)

LOWER BALL JOINT ASSY FRONT LH

2607Y–04

REPLACEMENT

HINT:

COMPONENTS: See page 26–3

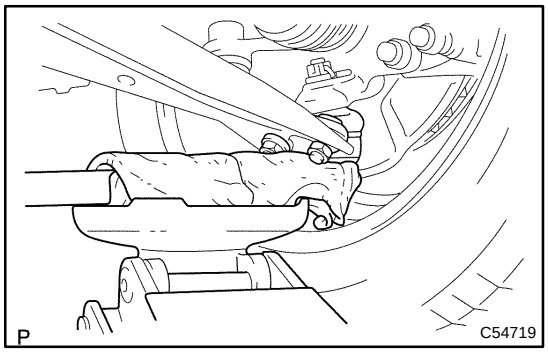

1. INSPECT LOWER BALL JOINT ASSY FRONT LH

(a) Jack up front side of the vehicle.

(b) Check the rattle of the lower ball joint assy front LH.

2. REMOVE FRONT WHEEL

3. REMOVE FRONT AXLE HUB LH NUT(See page 30–6)

SST 09930–00010

4. DISCONNECT SPEED SENSOR FRONT LH (W/ ABS)(See page 30–6)

5. SEPARATE TIE ROD END SUB–ASSY LH(See page 30–6)

SST 09628–62011

6. SEPARATE FRONT SUSPENSION ARM SUB–ASSY LOWER NO.1 LH(See page 30–6)

7. SEPARATE FRONT AXLE ASSY LH(See page 30–6)

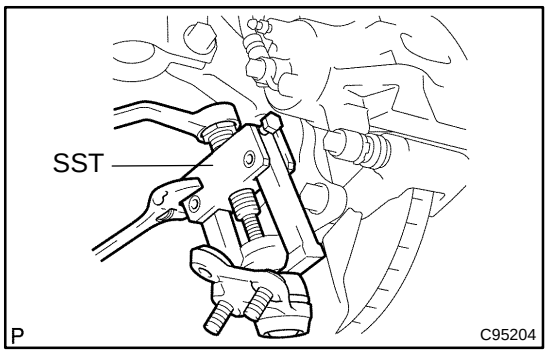

8. REMOVE LOWER BALL JOINT ASSY FRONT LH

(a) Remove the cotter pin and castle nut.

(b) Using SST, remove the lower ball joint assy from the steering knuckle LH.

SST 09628–62011

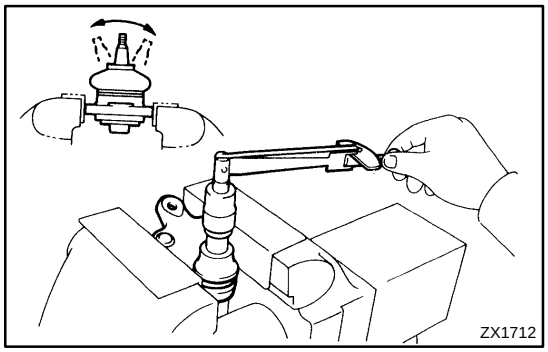

9. INSPECT LOWER BALL JOINT ASSY FRONT LH

(a) As shown in the illustration, flip the ball joint stud back and forth 5 times, before installing the nut.

(b) Using a torque wrench, turn the nut continuously at a rate of 3 – 5 seconds per 1 turn and take the torque reading on the 5th turn.

Turning torque:

0.98 – 4.9 N·m (10 – 50 kgf·cm, 8.7 – 43 in.·lbf)

10. INSTALL LOWER BALL JOINT ASSY FRONT LH

(a) Install the lower ball joint assy front LH to the steering knuckle LH, tighten the castle nut.
Torque: 103 N·m (1050 kgf·cm, 76 ft·lbf)

(b) Install a new cotter pin.

11. INSTALL FRONT AXLE ASSY LH(See page 30–6)

12. INSTALL FRONT SUSPENSION ARM SUB–ASSY LOWER NO.1 LH(See page 30–6)

13. INSTALL TIE ROD END SUB–ASSY LH(See page 30–6)

14. INSTALL SPEED SENSOR FRONT LH (W/ ABS)(See page 30–6)

15. INSTALL FRONT AXLE HUB LH NUT(See page 30–6)
SST 09931–00020

16. INSTALL FRONT WHEEL
Torque: 103 N·m (1,050 kgf·cm, 76 ft·lbf)

17. INSPECT AND ADJUST FRONT WHEEL ALIGNMENT(See page 26–5)

18. CHECK ABS SPEED SENSOR SIGNAL (W/ ABS)(See page 05–297)

FRONT SUSPENSION

COMPONENTS

2607U–01

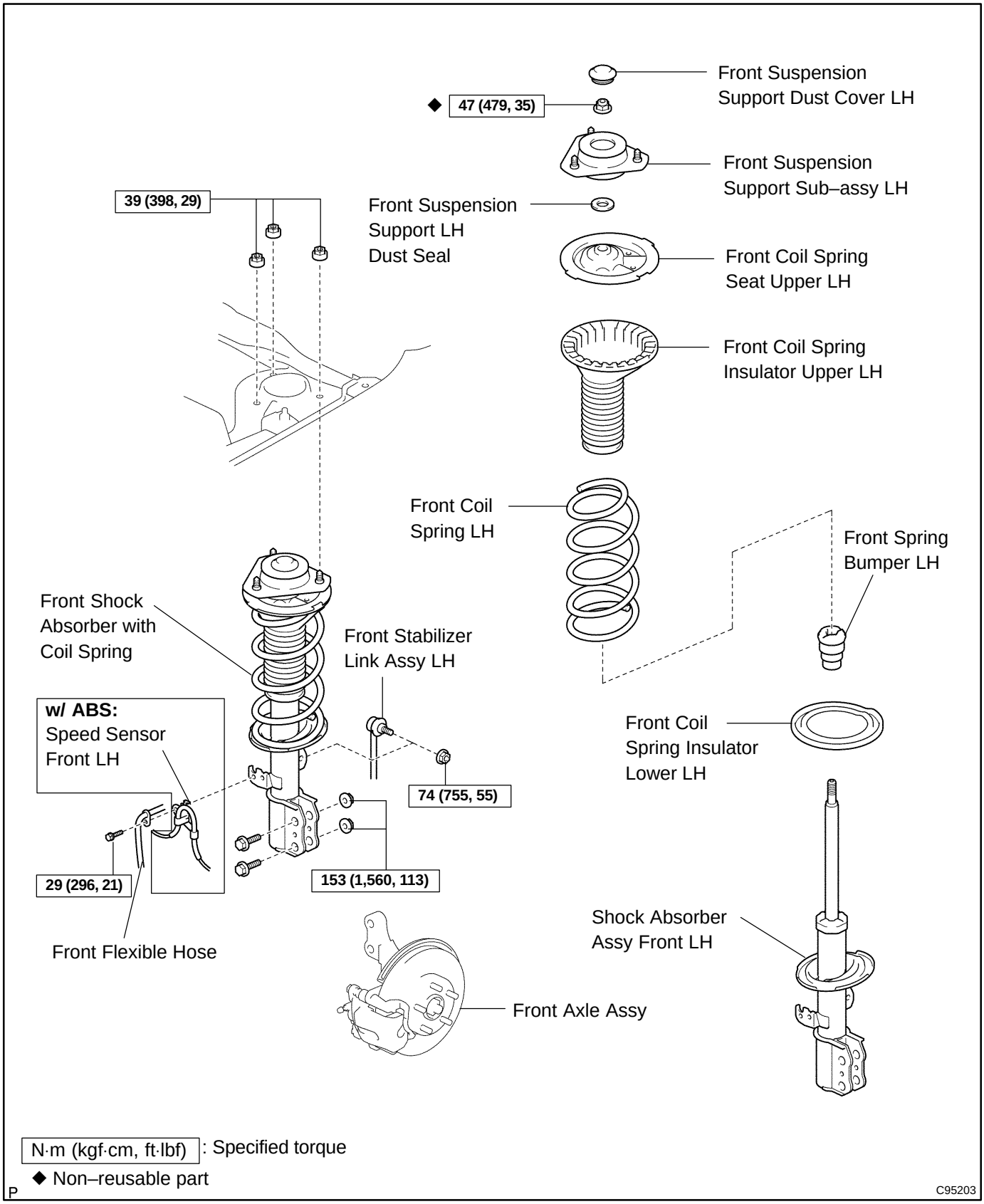

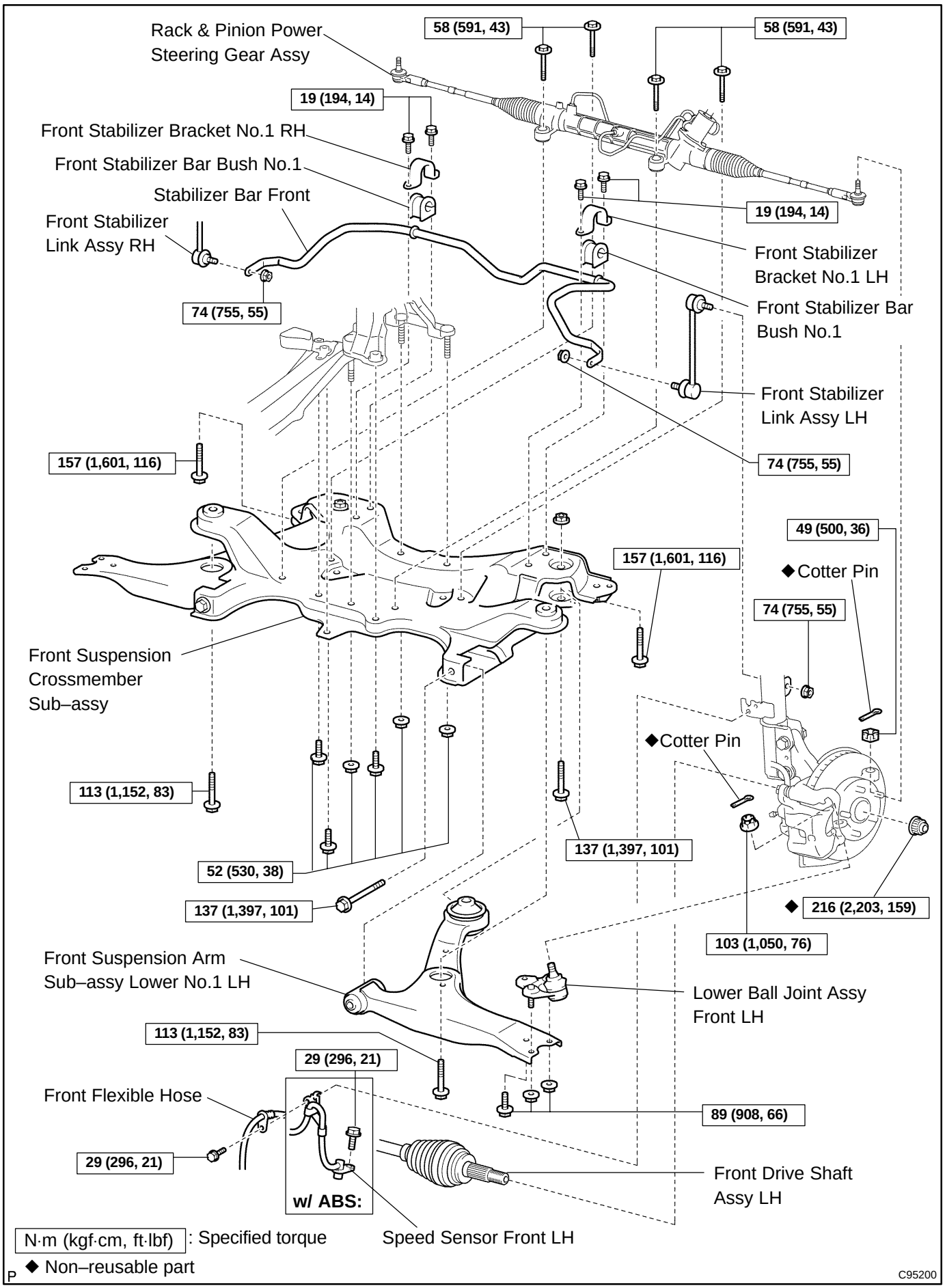
Rack & Pinion Power Steering Gear Assy
58 (591, 43)
58 (591, 43)
19 (194, 14)
Front Stabilizer Bracket No.1 RH
Front Stabilizer Bar Bush No.1
Stabilizer Bar Front
19 (194, 14)
Front Stabilizer Link Assy RH
Front Stabilizer Bracket No.1 LH
74 (755, 55)
Front Stabilizer Bar Bush No.1
Front Stabilizer Link Assy LH
157 (1,601, 116)
74 (755, 55)
49 (500, 36)
157 (1,601, 116)
◆Cotter Pin
74 (755, 55)
Front Suspension Crossmember Sub–assy
◆Cotter Pin
113 (1,152, 83)
137 (1,397, 101)
52 (530, 38)
137 (1,397, 101)
◆ 216 (2,203, 159)
103 (1,050, 76)
Front Suspension Arm Sub–assy Lower No.1 LH
Lower Ball Joint Assy Front LH
113 (1,152, 83)
29 (296, 21)
Front Flexible Hose
89 (908, 66)
29 (296, 21)
w/ ABS:
Front Drive Shaft Assy LH
Speed Sensor Front LH
N·m (kgf·cm, ft·lbf) : Specified torque
◆ Non–reusable part
C95200

FRONT WHEEL ALIGNMENT

2607T–01

ADJUSTMENT

1. INSPECT TIRE(See page 28–1)

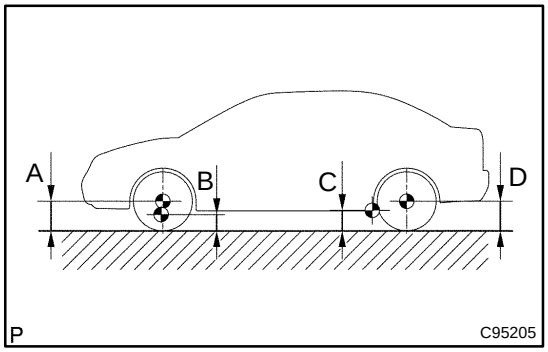

2. MEASURE VEHICLE HEIGHT

Vehicle height:

	USA, Canada	Mexico
Front (A – B)	87 mm (3.43 in.)	72 mm (2.84 in.)
Rear (D – C)	43 mm (1.69 in.)	29 mm (1.14 in.)

Measuring points:

A: Ground clearance of front wheel center

B: Ground clearance of lower suspension arm front bolt center

C: Ground clearance of axle beam set bolt center

D: Ground clearance of rear wheel center

NOTICE:

Before inspecting the wheel alignment, adjust the vehicle height to the specified value.

If the vehicle height is not the specified value, try to adjust it by pushing down on or lifting the body.

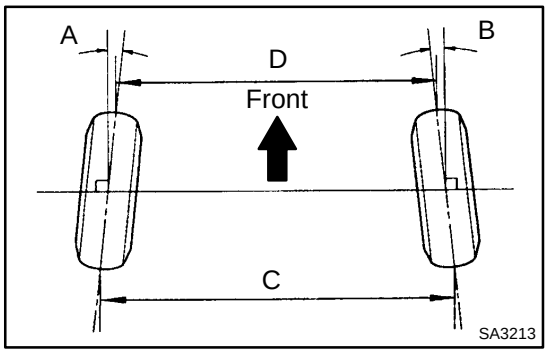

3. INSPECT TOE–IN

Toe–in:

Toe–in (total)	A + B: 0° ± 12' (0° ± 0.2°) C – D: 0 ± 2 mm (0 ± 0.08 in.)

If the toe–in is not within the specified value, adjust it at the rack ends.

4. ADJUST TOE–IN

(a) Remove the rack boot set clips.

(b) Loosen the tie rod end lock nuts.

(c) Turn the right and left rack ends by an equal amount to adjust the toe–in.

HINT:

Try to adjust the toe–in to the center of the specified value.

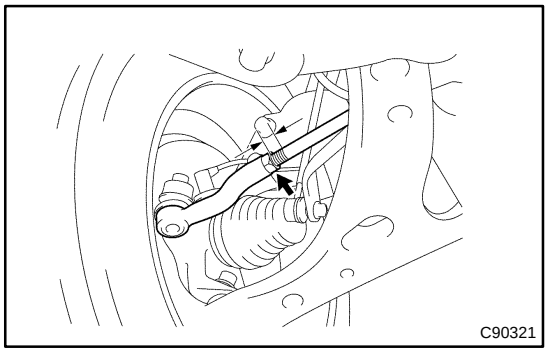

(d) Make sure that the lengths of the right and left rack ends are the same.

Rack end length difference: 1.5 mm (0.059 in.) or less

(e) Torque the tie rod end lock nuts.

Torque: 74 N·m (755 kgf·cm, 55 ft·lbf)

(f) Place the boots on the seats and install the clips.

HINT:

Make sure that the boots are not twisted.

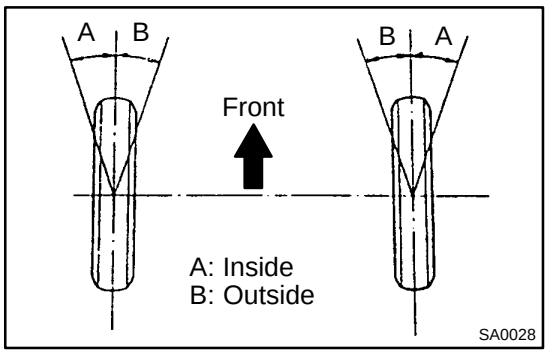

5. INSPECT WHEEL ANGLE

(a) Turn the steering wheel fully and measure the turning angle.

Wheel turning angle:

	USA, Canada	Mexico
Inside wheel	37˚06' ± 2˚ (37.10˚ ± 2˚)	37˚16' ± 2˚ (37.27˚ ± 2˚)
Outside wheel: Reference	31˚49' (31.82˚)	32˚08' (32.13˚)

If the right and left inside wheel angles differ from the specified value, check the right and left rack end lengths.

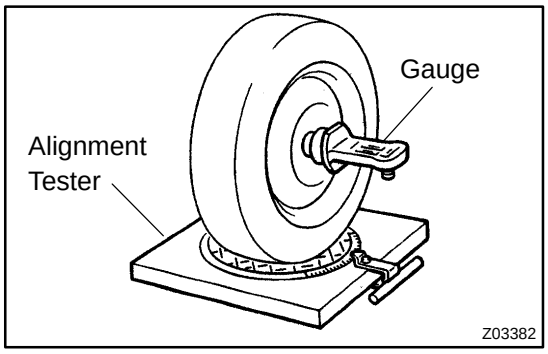

6. INSPECT CAMBER, CASTER AND STEERING AXIS INCLINATION

(a) Install the camber–caster–kingpin gauge or position vehicle on wheel alignment tester.

(b) Inspect the camber, caster and steering axis inclination.

Camber, caster and steering axis inclination:

	USA, Canada	Mexico
Camber	–0˚32' ± 45' (–0.53˚ ± 0.75˚)	–0˚22' ± 45' (–0.37˚ ± 0.75˚)
Right–left error	45' (0.75˚) or less	45' (0.75˚) or less
Caster	2˚50' ± 45' (2.83˚ ± 0.75˚)	2˚43' ± 45' (2.72˚ ± 0.75˚)
Right–left error	45' (0.75˚) or less	45' (0.75˚) or less
Steering axis inclination	11˚21' ± 45' (11.35˚ ± 0.75˚)	10˚59" ± 45' (10.98˚ ± 0.75˚)
Right–left error	45' (0.75˚) or less	45' (0.75˚) or less

If the caster and steering axis inclination are not within the specified values, after the camber has been correctly adjusted, recheck the suspension parts for damaged and/or worn out parts.

7. ADJUST CAMBER

NOTICE:

After the camber has been adjusted, inspect the toe–in.

(a) Remove the front wheel.

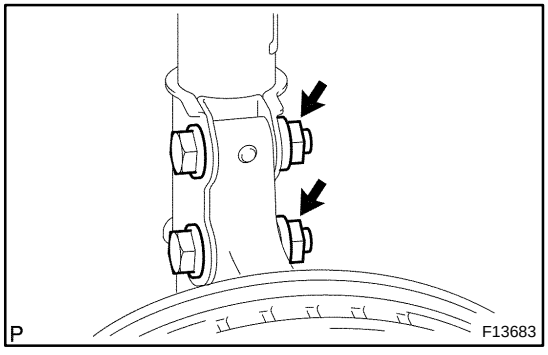

(b) Remove the 2 nuts on the lower side of the shock absorber assy front LH.

NOTICE:

When removing nut, stop the bolt from rotating and loosen the nut.

(c) Clean the installation surfaces of the shock absorber assy front LH and the steering knuckle.

(d) Temporarily install the 2 nuts.

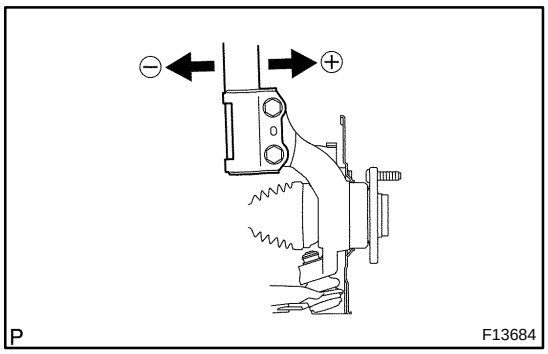

(e) Adjust the camber by pushing or pulling the lower side of the shock absorber in the direction in which the camber adjustment is required.

(f) Tighten the nuts.
Torque: 153 N·m (1,560 kgf·cm, 113 ft·lbf)

(g) Install the front wheel.
Torque: 103 N·m (1,050 kgf·cm, 76 ft·lbf)

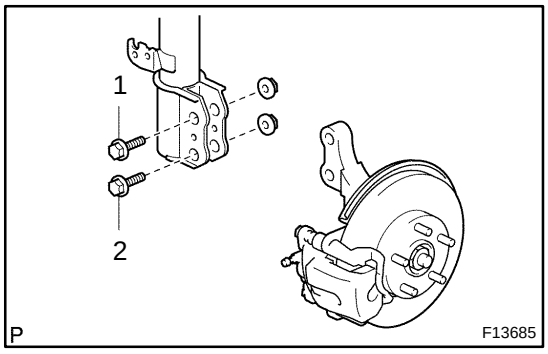

(h) Check the camber.

HINT:

- Try to adjust the camber to the center of the specified value.
- Adjusting value for the set bolts is –1°30’ – 0°30’ (–1.5° – 0.5°).

If the camber is not within the specified value, using the following table, estimate how much additional camber adjustment will be required, and select the camber adjusting bolt.

Bolt / Adjusting Value	Set Bolt		Adjusting Bolt					
	90105–15001		90105–15004		90105–15005		90105–15006	
			1 Dot		2 Dots		3 Dots	
	1	2	1	2	1	2	1	2
–1˚30’ – –1˚15’							●	●
–1˚15’ – –1˚00’					●			●
–1˚00’ – –45’			●					●
–45’ – –30’	●							●
–30’ – –15’	●					●		
–15’ – 0’	●			●				
0’ – 15’	●			●				
15’ – 30’	●					●		
30’ – 45’	●							●
45’ – 1˚00’			●					●
1˚00’ – 1˚15’					●			●
1˚15’ – 1˚30’							●	●

N F12938

(i) Perform the steps mentioned above again. At step (e), replace 1 or 2 selected bolts.

HINT:

When replacing the 2 bolts, replace 1 bolt at a time.

2607S–01

REPAIR

HINT:

This is a flow chart for vehicle pull.

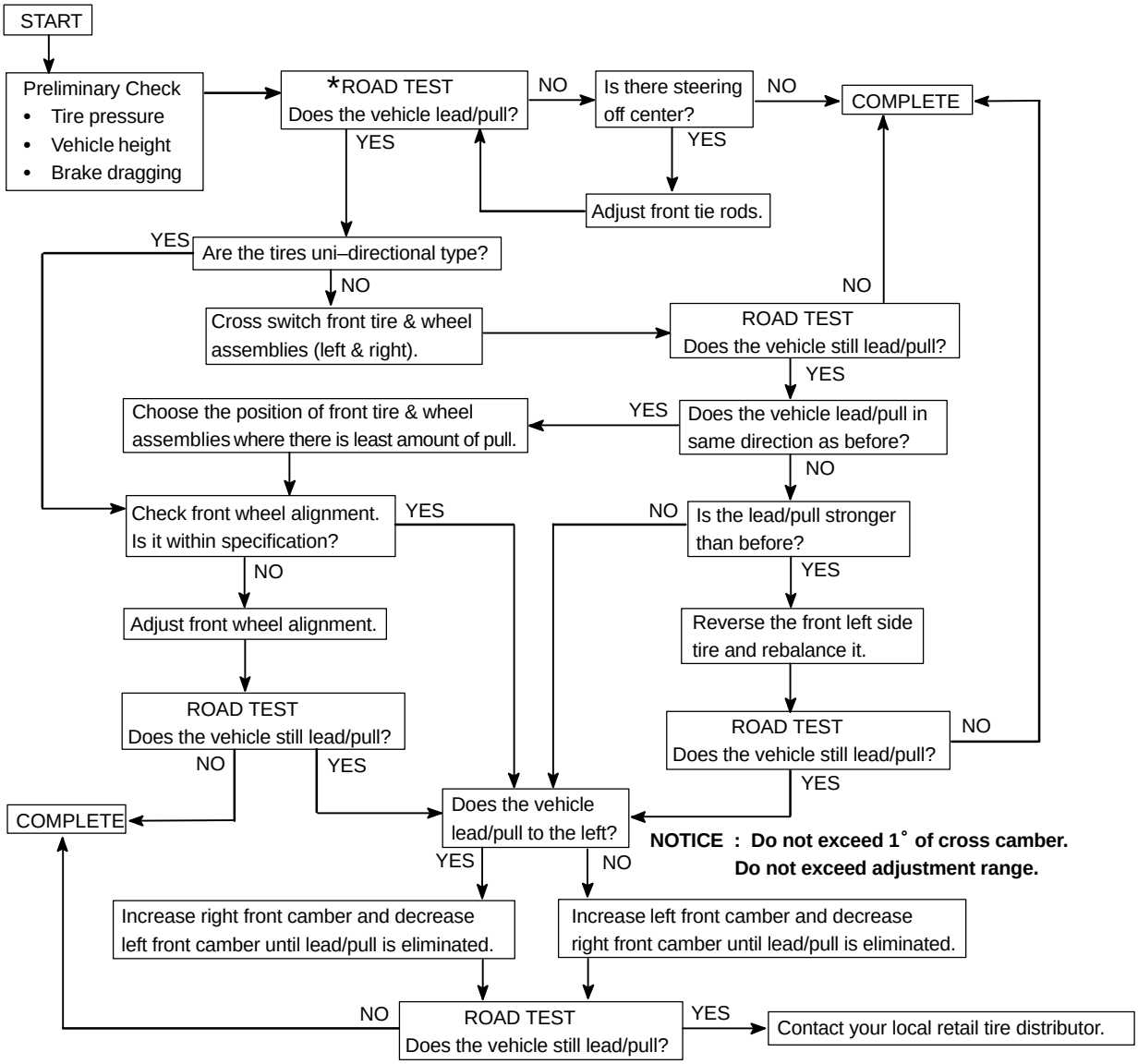

Select a flat road where the vehicle can be driven in a straight line for 100 meters at a constant speed of 35mph. Please confirm safety and set the steering wheel to its straight position. Drive the vehicle in a straight line for 100 meters at a constant speed of 35 mph without holding the steering wheel.

(1) The vehicle can keep straight but the steering wheel has some angle.
→ STEERING OFF CENTER (See page 50–4)

(2) The vehicle cannot keep straight. → STEERING PULL

2607W–01

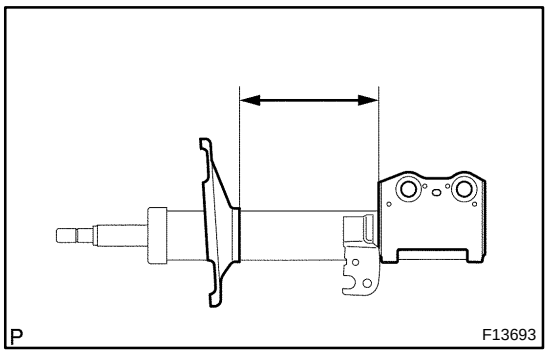

DISPOSAL

1. DISPOSE SHOCK ABSORBER ASSY FRONT LH

(a) Fully extend the shock absorber piston rod.

(b) Using a drill, make a hole in the cylinder as shown in the illustration to discharge the gas inside.

CAUTION:

- **When drilling, chips may fly out, work carefully.**
- **The gas is colorless, odorless and non–poisonous.**

FRONT SHOCK ABSORBER WITH COIL SPRING

OVERHAUL

2607V–01

HINT:

COMPONENTS: See page 26–3

1. REMOVE FRONT WHEEL

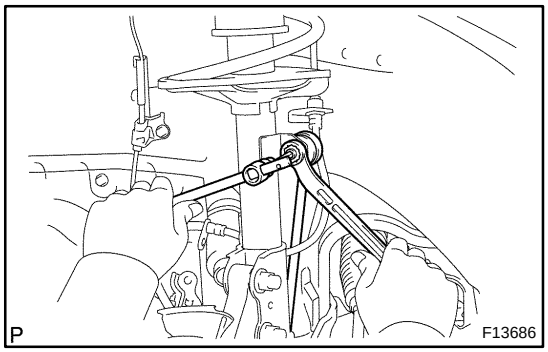

2. DISCONNECT FRONT STABILIZER LINK ASSY LH

(a) Remove the nut and disconnect the front stabilizer link assy LH from the shock absorber assy front LH.

HINT:

If the ball joint turns together with the nut, use a hexagon (6 mm) wrench to hold the stud.

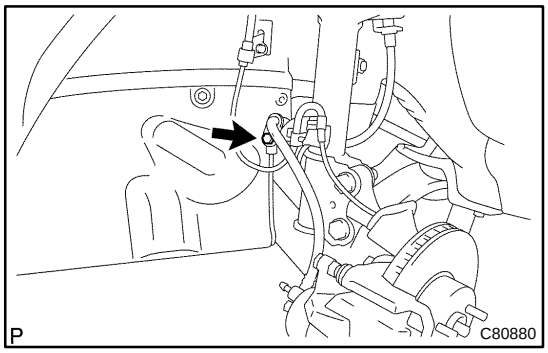

3. DISCONNECT FRONT FLEXIBLE HOSE

(a) w/ ABS:

Remove the bolt, disconnect the front flexible hose No. 1 and speed sensor front LH.

(b) w/o ABS:

Remove the bolt, disconnect the front flexible hose.

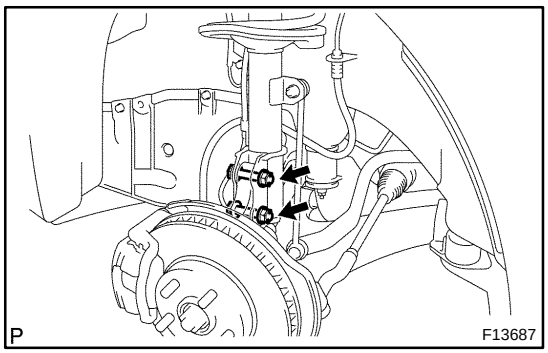

4. REMOVE FRONT SHOCK ABSORBER WITH COIL SPRING

(a) Remove the 2 bolts and nuts on the lower side of the shock absorber assy front LH.

NOTICE:

When removing the bolt, stop the bolt from rotating and loosen the nut.

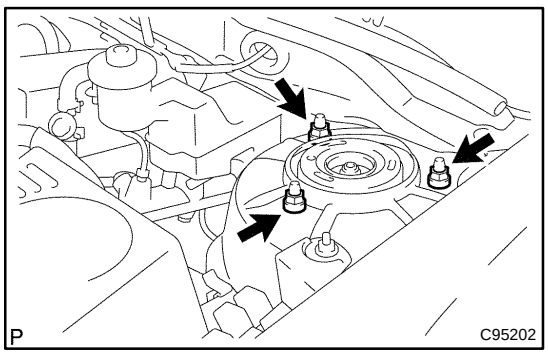

(b) Remove the 3 nuts on the upper side of the shock absorber assy front LH.

(c) Remove the front shock absorber with the coil spring.

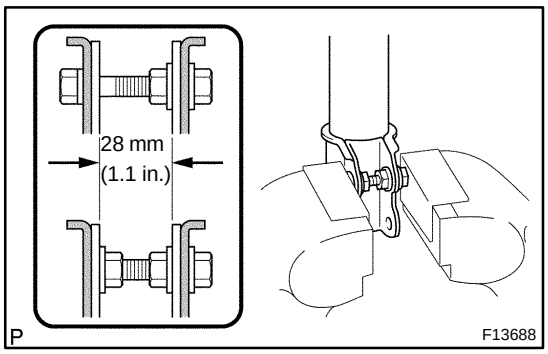

5. FIX FRONT SHOCK ABSORBER WITH COIL SPRING

(a) Install 2 nuts and a bolt to the bracket at the lower side of the shock absorber assy front LH and secure it in a vise.

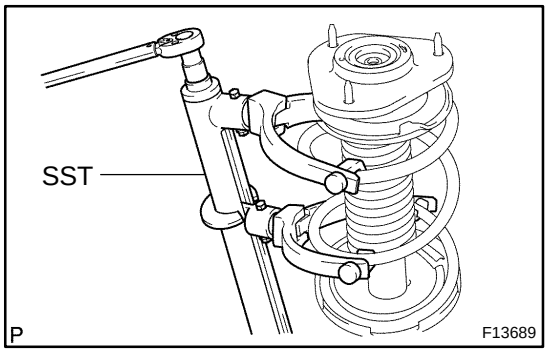

6. REMOVE SHOCK ABSORBER ASSY FRONT LH

(a) Remove the front suspension support dust cover LH from the front suspension support sub–assy LH.

(b) Using SST, compress the front coil spring LH.
SST 09727–30021

NOTICE:

Do not use an impact wrench. It will damage the SST.

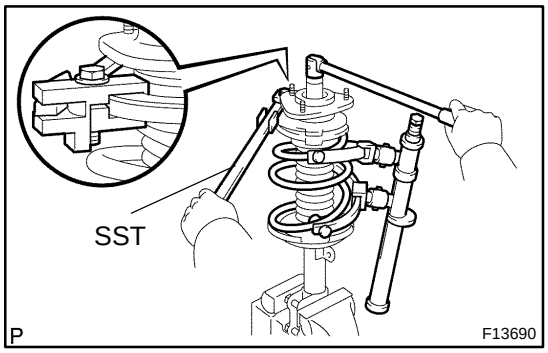

(c) Using SST to hold the front coil spring seat upper LH, remove the nut.
SST 09729–22031

(d) Remove the front suspension support sub–assy LH, front suspension support LH dust seal, front coil spring seat upper LH, front coil spring insulator upper LH, front coil spring LH, front spring bumper LH and front coil spring insulator lower LH.

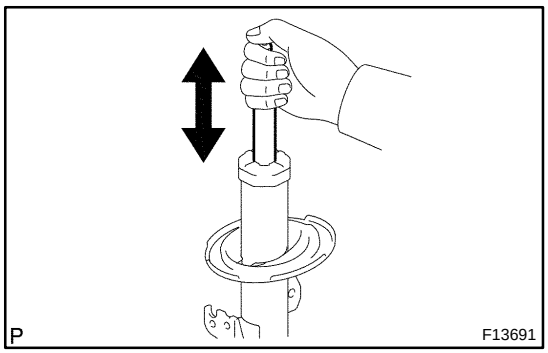

7. INSPECT SHOCK ABSORBER ASSY FRONT LH

(a) Compress and extend the shock absorber rod and check that there is no abnormal resistance or unusual sound during operation.

If there is any abnormality, replace the shock absorber with a new one.

NOTICE:

When disposing of the shock absorber, see DISPOSAL on page 26–12.

8. INSTALL SHOCK ABSORBER ASSY FRONT LH

(a) Install the front coil spring insulator lower LH onto the shock absorber assy front LH.

(b) Install the front spring bumper LH to the shock absorber piston rod.

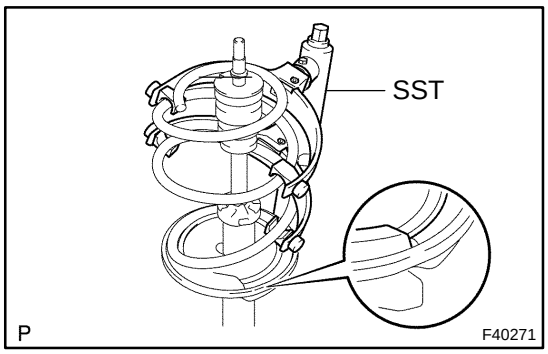

(c) Using SST, compress the front coil spring LH.
SST 09727–30021

NOTICE:

Do not use an impact wrench. It will damage the SST.

(d) Install the front coil spring LH to the shock absorber assy front LH.

HINT:

Fit the lower end of the front coil spring LH into the gap of the spring lower seat.

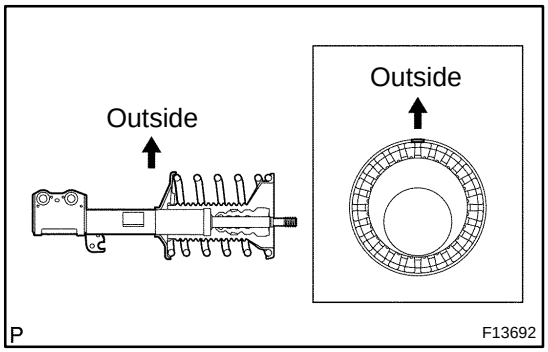

(e) Install the front coil spring insulator upper LH as shown in the illustration.

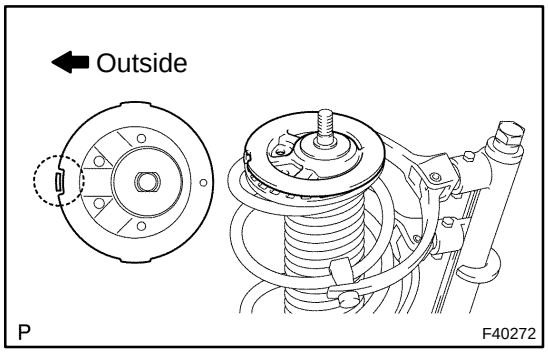

(f) Install the front coil spring seat upper LH to the shock absorber assy front LH with the mark facing the outside of the vehicle.

(g) Install the front suspension support LH dust seal and front suspension support sub–assy LH.

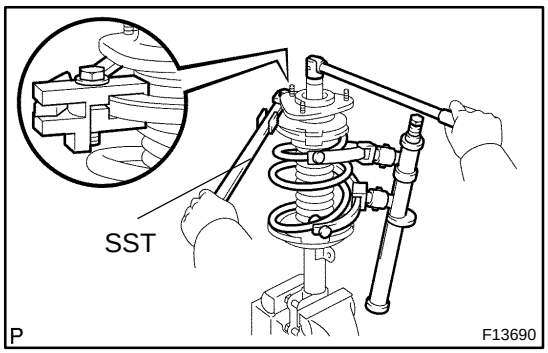

(h) Using SST to hold the front coil spring seat upper LH, install a new nut.
SST 09729–22031
Torque: 47 N·m (479 kgf·cm, 35 ft·lbf)

(i) Remove the SST.

(j) Install the front suspension support dust cover LH.

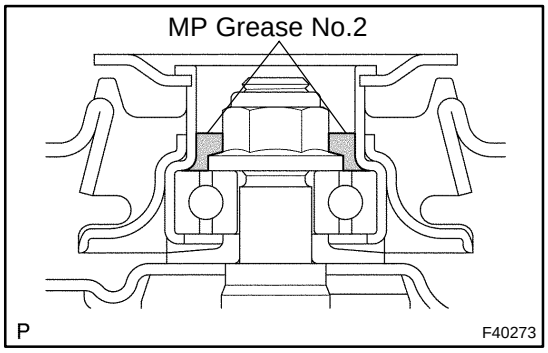

(k) Apply MP grease No.2 into the suspension support sub–assy LH.

CAUTION:

Do not touch grease on rubber surface of upper support.

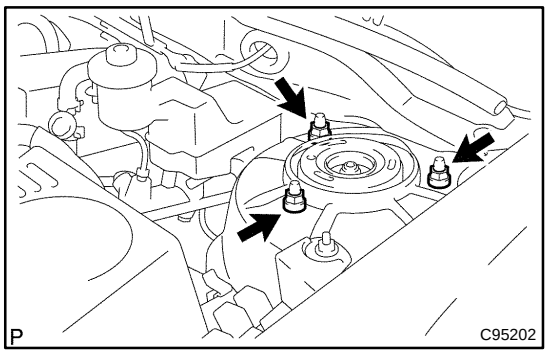

9. INSTALL FRONT SHOCK ABSORBER WITH COIL SPRING

(a) Install the shock absorber with the 2 bolts.

(b) Install the 3 nuts to the upper side of front shock absorber with coil spring.

Torque: 39 N·m (398 kgf·cm, 29 ft·lbf)

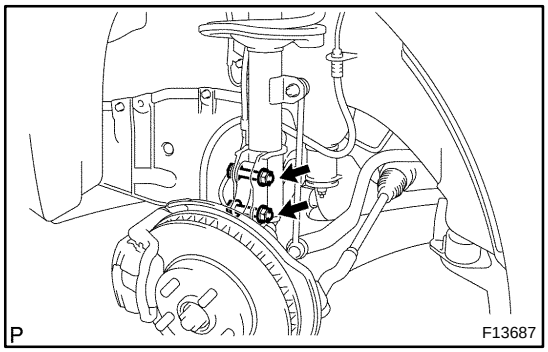

(c) Install the 2 bolts and nuts to the lower side of front shock absorber with coil spring.

Torque: 153 N·m (1,560 kgf·cm, 113 ft·lbf)

NOTICE:

When installing bolt, stop the bolt from rotating and torque the nut.

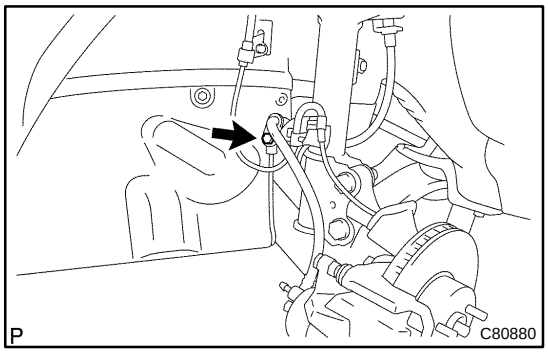

10. INSTALL FRONT FLEXIBLE HOSE

(a) w/ ABS:

Install the front flexible hose and speed sensor front LH with the bolt.

Torque: 29 N·m (296 kgf·cm, 21 ft·lbf)

(b) w/o ABS:

Install the front flexible hose with the bolt.

Torque: 29 N·m (296 kgf·cm, 21 ft·lbf)

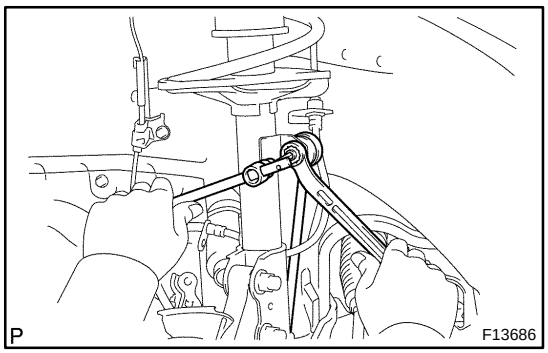

11. INSTALL FRONT STABILIZER LINK ASSY LH

(a) Install the front stabilizer link assy LH with the nut.

Torque: 74 N·m (755 kgf·cm, 55 ft·lbf)

HINT:

If the ball joint turns together with the nut, use a hexagon wrench (6 mm) to hold the stud.

12. INSTALL FRONT WHEEL

Torque: 103 N·m (1,050 kgf·cm, 76 ft·lbf)

13. INSPECT AND ADJUST FRONT WHEEL ALIGNMENT(See page 26–5)

STABILIZER BAR FRONT

2607Z–01

REPLACEMENT

HINT:

COMPONENTS: See page 26–3

1. REMOVE FRONT WHEEL

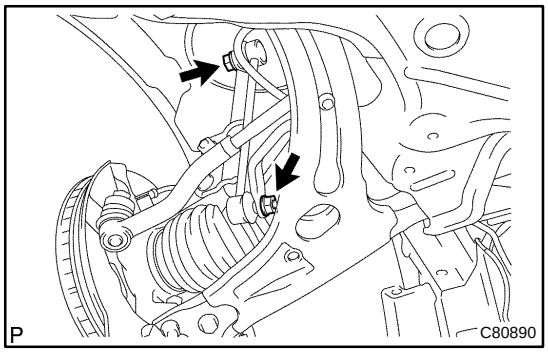

2. REMOVE FRONT STABILIZER LINK ASSY LH

(a) Remove the 2 nuts and stabilizer bar link.

HINT:

If the ball joint turns together with the nut, use a hexagon wrench (6 mm) to hold the stud.

3. REMOVE FRONT STABILIZER LINK ASSY RH

HINT:

Remove the RH side by the same procedure as the LH side.

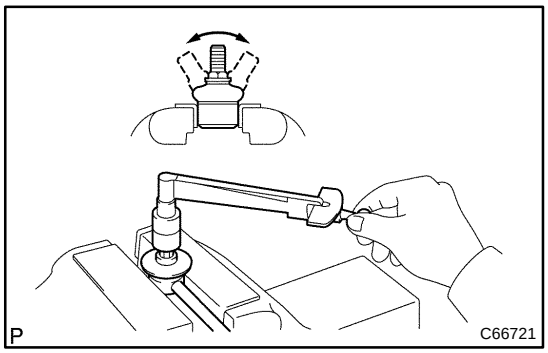

4. INSPECT FRONT STABILIZER LINK ASSY

(a) As shown in the illustration, flip the ball joint stud back and forth 5 times, before installing the nut.

(b) Using a torque wrench, turn the nut continuously at a rate of 2 – 4 seconds per 1 turn and take the torque reading on the 5th turn.

Turning torque:

0.05 – 1.96 N·m (0.5 – 20 kgf·cm, 0.4 – 17 in.·lbf)

5. SEPARATE FRONT SUSPENSION ARM SUB–ASSY LOWER NO.1 LH(See page 26–13)

6. SEPARATE FRONT SUSPENSION ARM SUB–ASSY LOWER NO.1 RH

HINT:

Remove the RH side by the same procedure as the LH side.

7. SEPARATE RACK & PINION POWER STEERING GEAR ASSY(See page 26–13)

8. SUSPEND ENGINE ASSY

AT: (See page 40–9)

MT: (See page 41–17)

9. SEPARATE FRONT SUSPENSION CROSSMEMBER SUB–ASSY(See page 26–13)

10. REMOVE STABILIZER BAR FRONT

(a) Remove the 4 bolts,front stabilizer bracket No.1 LH, front stabilizer bracket No.1 RH, 2 front stabilizer bar bushes No.1 and stabilizer bar front from the front suspension crossmember sub–assy.

(b) Remove the 2 front stabilizer bar bushes No.1 from the stabilizer bar front.

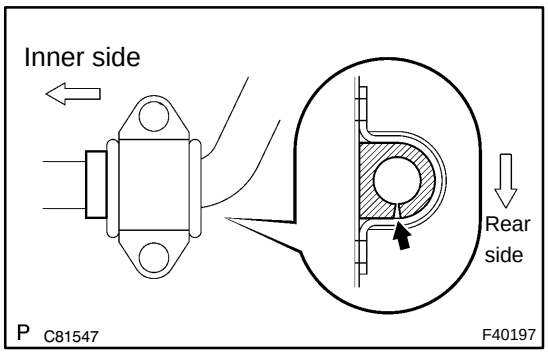

11. INSTALL STABILIZER BAR FRONT

(a) Install 2 front stabilizer bar bushes No.1, front stabilizer bracket No.1 LH and front stabilizer bracket No.1 RH to the stabilizer bar front.

HINT:

Install the bushing to the inner side of the bushing stopper on the stabilizer bar.

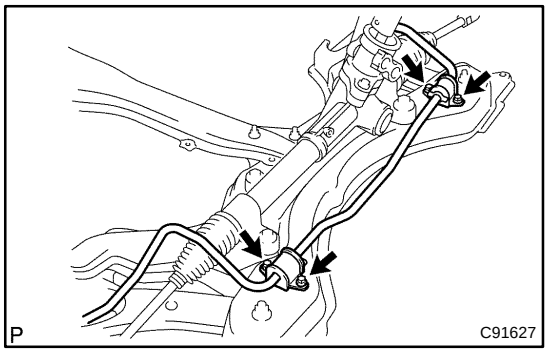

(b) Install the stabilizer bar front and 4 bolts to the front suspension crossmember sub–assy.
Torque: 19 N·m (194 kgf·cm, 14 ft·lbf)

12. INSTALL FRONT SUSPENSION CROSSMEMBER SUB–ASSY(See page 26–13)
SST 09670–00010

13. INSTALL RACK & PINION POWER STEERING GEAR ASSY(See page 26–13)

14. INSTALL FRONT SUSPENSION ARM SUB–ASSY LOWER NO.1 LH(See page 26–13)

15. INSTALL FRONT SUSPENSION ARM SUB–ASSY LOWER NO.1 RH

HINT:

Install the RH side by the same procedures as the LH side.

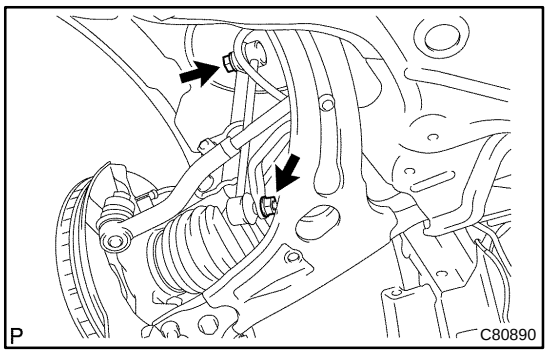

16. INSTALL FRONT STABILIZER LINK ASSY LH

(a) Install the stabilizer bar link with the 2 nuts.
Torque: 74 N·m (755 kgf·cm, 55 ft·lbf)

HINT:

If the ball joint turns together with the nut, use a hexagon wrench (6 mm) to hold the stud.

17. INSTALL FRONT STABILIZER LINK ASSY LH

HINT:

Install the RH side by the same procedure as the LH side.

18. INSTALL FRONT WHEEL
Torque: 103 N·m (1,050 kgf·cm, 76 ft·lbf)

19. INSPECT AND ADJUST FRONT WHEEL ALIGNMENT(See page 26–5)

FRONT SUSPENSION ARM SUB–ASSY LOWER NO.1 LH

2607X–01

REPLACEMENT

HINT:

COMPONENTS: See page 26–3

1. REMOVE FRONT WHEEL

2. DISCONNECT FRONT STABILIZER LINK ASSY LH (LH (A/T) POSITION)(See page 26–8)

3. DISCONNECT FRONT STABILIZER LINK ASSY RH (LH (A/T) POSITION)

HINT:

Remove the RH side by the same procedures as the LH side.

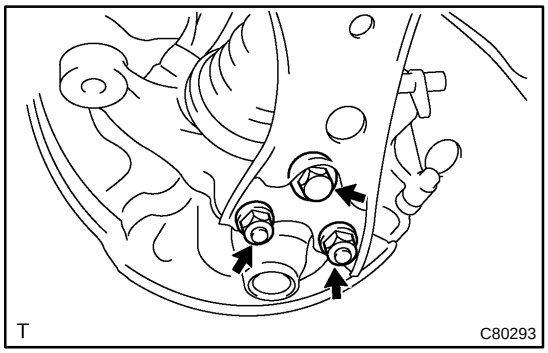

4. SEPARATE FRONT SUSPENSION ARM SUB–ASSY LOWER NO.1 LH

(a) Remove the bolt and 2 nuts, and separate the front suspension arm sub–assy lower No.1 LH from the lower ball joint assy front LH.

5. SEPARATE FRONT SUSPENSION ARM SUB–ASSY LOWER NO.1 RH (LH (A/T) POSITION)

HINT:

Remove the RH side by the same procedures as the LH side.

6. SEPARATE RACK & PINION POWER STEERING GEAR ASSY (LH (A/T) POSITION)

(a) Remove the 4 bolts, separate the rack & pinion power steering gear assy.

NOTICE:

Loosen the bolt since the nut cannot be rotated.

(b) Suspend the rack & pinion power steering gear assy.

7. SUSPEND ENGINE ASSY (LH (A/T) POSITION)(See page 40–9)

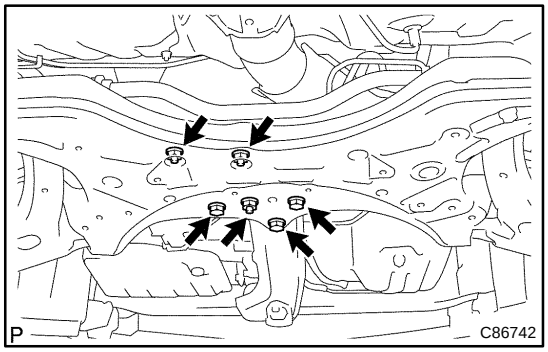

8. SEPARATE FRONT SUSPENSION CROSSMEMBER SUB–ASSY (LH (A/T) POSITION)

(a) Remove the 3 bolts and 3 nuts, disconnect the transverse engine engine mounting insulator and engine mounting member sub–assy center from the front suspension crossmember sub–assy.

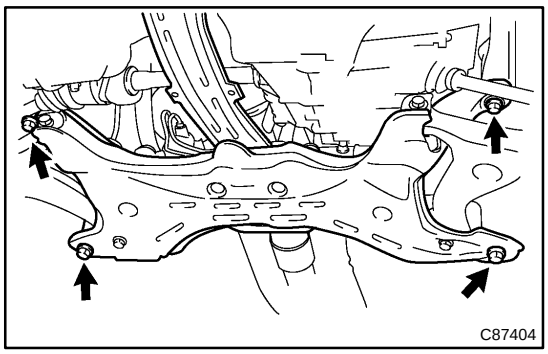

(b) Remove the 4 bolts.
(c) Lower the transmission jack, remove the front suspension crossmember sub–assy.

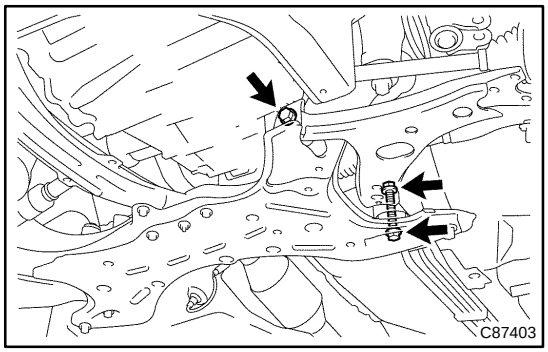

9. REMOVE FRONT SUSPENSION ARM SUB–ASSY LOWER NO.1 LH

(a) Remove the 2 bolts, nut and front suspension arm sub–assy lower No.1 LH from the front suspension crossmember sub–assy.

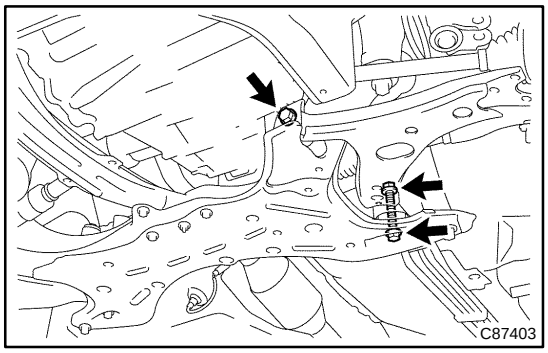

10. TEMPORARY TIGHTEN FRONT SUSPENSION ARM SUB–ASSY LOWER NO.1 LH

(a) Install the front suspension arm sub–assy lower No. 1 LH, temporarily tighten the 2 bolts and nut.

11. INSTALL FRONT SUSPENSION CROSSMEMBER SUB–ASSY (LH (A/T) POSITION)

(a) Lift the front suspension crossmember sub–assy up with a transmission jack.

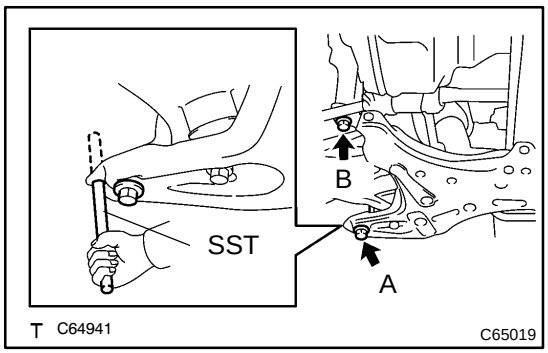

(b) Insert SST to the base hole of the RH side crossmember and RH side of the vehicle.
SST 09670–00010
(c) Tighten the bolt temporarily in the order A and B.

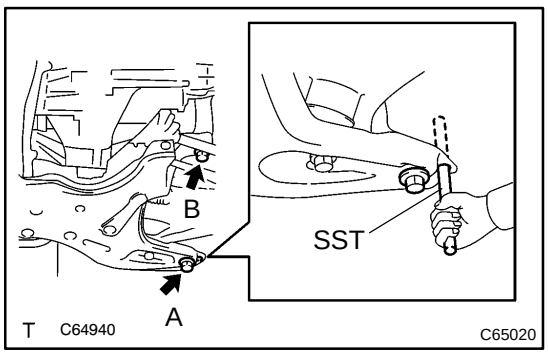

(d) Insert SST to the base hole of the LH side of crossmember and LH side of the vehicle.
SST 09670–00010
(e) Tighten the bolt temporarily in the order A and B.
(f) Insert SST to the base hole of the RH side of crossmember and RH side of the vehicle.
SST 09670–00010

(g) Then tighten the bolt A and B by the specified torque.
Torque:
Bolt A: 157 N·m (1,601 kgf·cm, 116 ft·lbf)
Bolt B: 113 N·m (1,152 kgf·cm, 83 ft·lbf)

(h) Insert SST to the base hole of the LH side of crossmember and LH side of the vehicle.
SST 09670–00010

(i) Tighten the bolt A and B by the specified torque.
Torque:
Bolt A: 157 N·m (1,601 kgf·cm, 116 ft·lbf)
Bolt B: 113 N·m (1,152 kgf·cm, 83 ft·lbf)

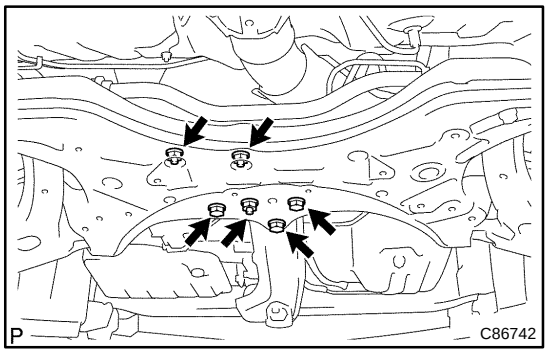

(j) Connect the transverse engine engine mounting insulator and engine mounting member sub–assy center to the front suspension crossmember sub–assy.

(k) Install the 3 bolts and 3 nuts.
Torque: 52 N·m (530 kgf·cm, 38 ft·lbf)

12. INSTALL RACK & PINION POWER STEERING GEAR ASSY (LH (A/T) POSITION)

(a) Install the rack & pinion power steering gear assy with the 4 bolts.
Torque: 58 N·m (591 kgf·cm, 43 ft·lbf)

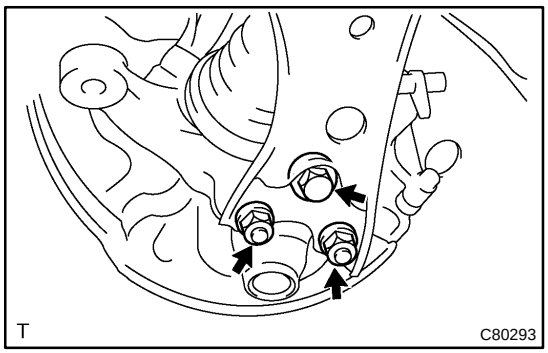

13. INSTALL FRONT SUSPENSION ARM SUB–ASSY LOWER NO.1 LH

(a) Install the front suspension arm sub–assy lower No.1 LH with the 2 nuts and bolt to the lower ball joint assy front LH.
Torque: 89 N·m (908 kgf·cm, 66 ft·lbf)

14. INSTALL FRONT SUSPENSION ARM SUB–ASSY LOWER NO.1 RH (LH (A/T) POSITION)

HINT:
Install the RH side by the same procedures as the LH side.

15. INSTALL FRONT STABILIZER LINK ASSY LH (LH (A/T) POSITION)(See page 26–8)

16. INSTALL FRONT STABILIZER LINK ASSY RH (LH (A/T) POSITION)

HINT:
Install the RH side by the same procedure as the LH side.

17. STABILIZE SUSPENSION

(a) Install the front wheel and jack down the vehicle.
Torque: 103 N·m (1,050 kgf·cm, 76 ft·lbf)

(b) Bounce the vehicle up and down several times to stabilize the suspension.

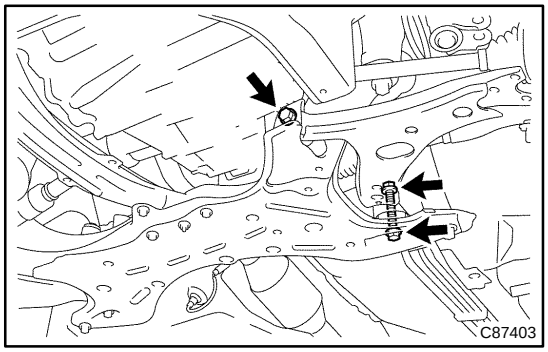

18. FULLY TIGHTEN FRONT SUSPENSION ARM SUB–ASSY LOWER NO.1 LH

(a) Fully tighten the 2 bolts and nut.
Torque: 137 N·m (1,397 kgf·cm, 101 ft·lbf)

NOTICE:
Tighten the bolt since the nut cannot be rotated.

19. INSPECT AND ADJUST FRONT WHEEL ALIGNMENT(See page 26–5)

FRONT SUSPENSION SYSTEM

2607R–01

PROBLEM SYMPTOMS TABLE

Use the table below to help you find the cause of the problem. The numbers indicate the priority of the likely cause of the problem. Check each part in order. If necessary, replace these parts.

Symptom	Suspect Area	See page
Bottoming	1. Vehicle (Overloaded)	–
	2. Spring (Weak)	26–8
	3. Shock absorber (Worn)	26–8
Sways/pitches	1. Tire (Worn or improperly inflated)	28–1
	2. Stabilizer bar (Bent or broken)	26–19
	3. Shock absorber (Worn)	26–8
Front wheel shimmy	1. Tire (Worn or improperly inflated)	28–1
	2. Wheel (Out of balance)	28–1
	3. Shock absorber (Worn)	26–8
	4. Wheel alignment (Incorrect)	26–5 27–3
	5. Ball joint (Worn)	26–17
	6. Hub bearing (Worn)	30–17
	7. Steering linkage (Loose or worn)	–
Abnormal tire wear	1. Tire (Worn or improperly inflated)	28–1
	2. Wheel alignment (Incorrect)	26–5 27–3
	3. Shock absorber (Worn)	26–8
	4. Suspension parts (Worn)	–

REAR SUSPENSION

COMPONENTS

2707O–01

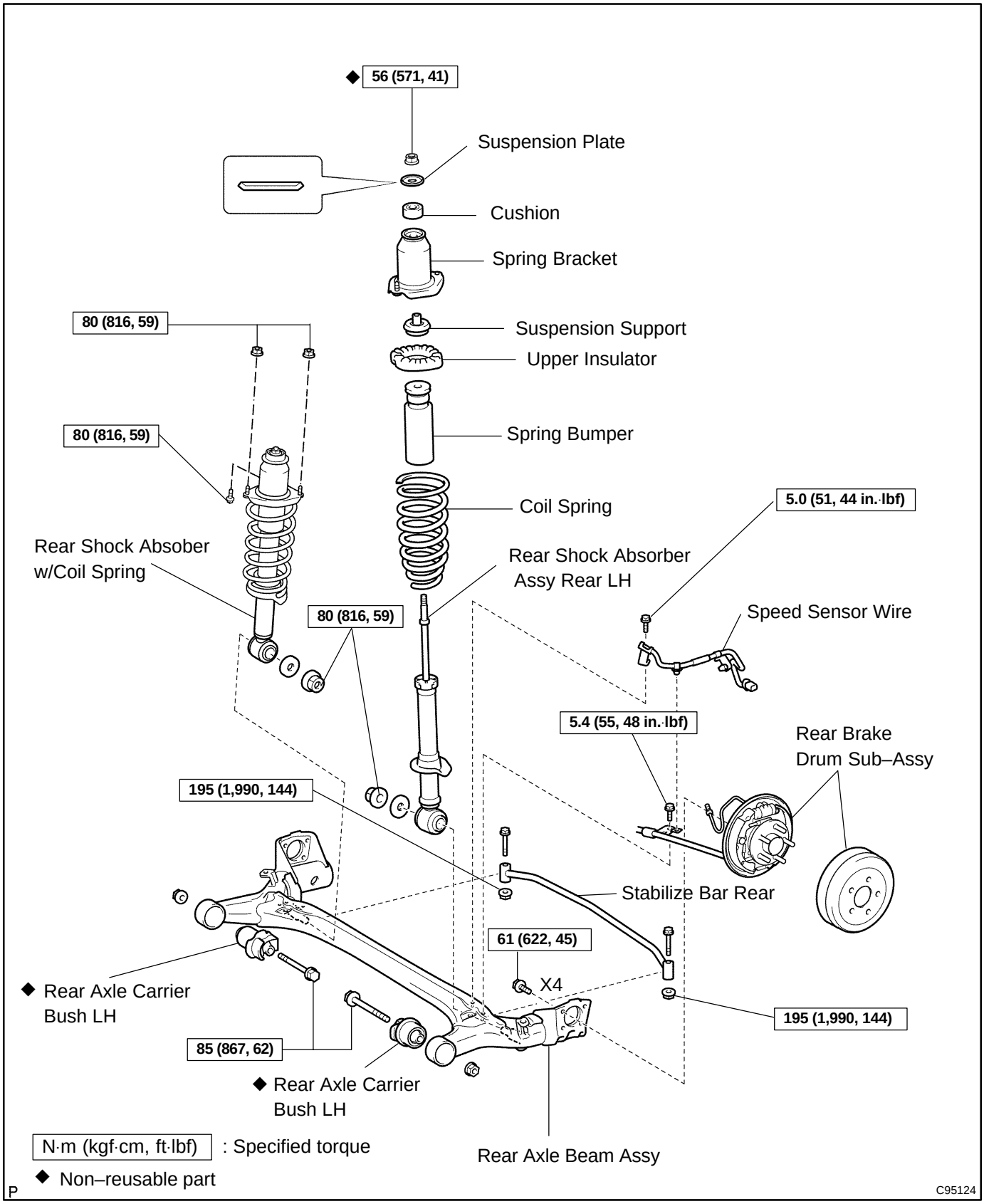

REAR WHEEL ALIGNMENT

2707P–01

INSPECTION

1. INSPECT TIRE(See page 28–1)

2. MEASURE VEHICLE HEIGHT(See page 26–5)

NOTICE:

Before inspecting the wheel alignment, adjust the vehicle height to the specified value.

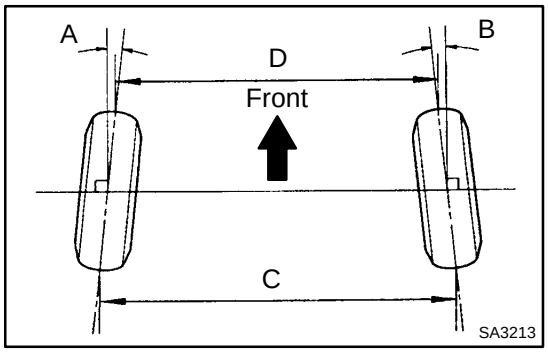

3. INSPECT TOE–IN

Toe–in:

USA, Canada:

	P195/65R15 89S	P185/65R15 86S
A + B	0˚16’ ± 16’ (0.26˚ ± 0.26˚)	0˚16’ ± 16’ (0.26˚ ± 0.26˚)
C – D	2.6 ± 2.5 mm (0.10 ± 0.10 in.)	2.5 ± 2.5 mm (0.10 ± 0.10 in.)

Mexico:

	P195/65R15 89H
A + B	0˚01’ ± 16’ (0.16˚ ± 0.26˚)
C – D	1.6 ± 2.5 mm (0.06 ± 0.10 in.)

If the toe–in is not within the specified value, inspect and replace the suspension parts as necessary.

4. INSPECT CAMBER

(a) Install the camber–caster–kingpin gauge or position vehicle on wheel alignment tester.

(b) Inspect the camber.

Camber:

	USA, Canada	Mexico
Camber	–1˚27’ ± 30’ (–1.45˚ ± 0.5˚)	–1˚26’ ± 30’ (–1.43˚ ± 0.5˚)
Right–left error	30’ (0.5˚) or less	30’ (0.5˚) or less

If the measured value is not within the specified value, inspect the suspension parts for damage and/or wear and replace them if necessary become camber is not adjustable.

REAR AXLE BEAM ASSY

2707S–02

REPLACEMENT

HINT:

COMPONENTS: See page 27–2

1. REMOVE REAR WHEEL

(a) Remove the RH and LH rear wheels.

2. REMOVE REAR BRAKE DRUM SUB–ASSY(See page 32–31)

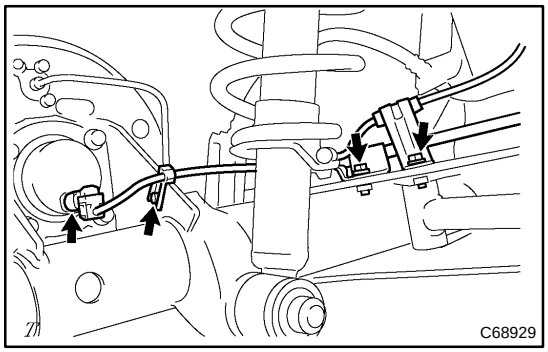

3. SEPARATE SKID CONTROL SENSOR WIRE

(a) Disconnect the skid control sensor connector.

(b) Remove the 2 bolts and separate the wire harness clamps.

(c) Remove the bolt and separate parking brake cable clamp.

(d) Using the same manner desoribed above to the other side.

4. REMOVE STABILIZER BAR REAR(See page 27–13)

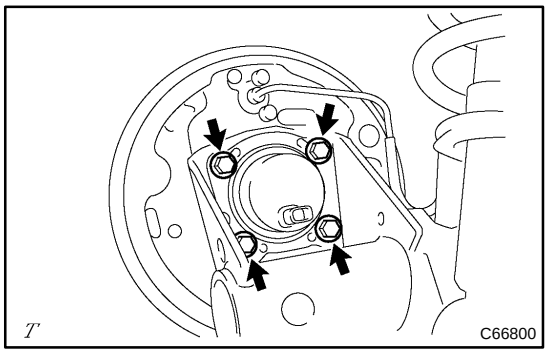

5. REMOVE REAR AXLE HUB & BEARING ASSY LH

(a) Remove the 4 bolts and rear axle hub from the axle beam.

6. REMOVE REAR AXLE HUB & BEARING ASSY RH

HINT:

Remove the RH side by the same procedures with the LH side.

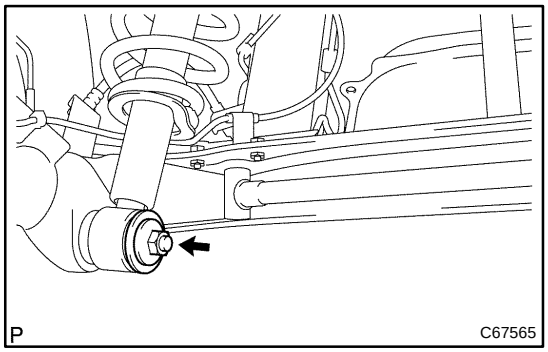

7. SEPARATE REAR SHOCK ABSORBER WITH COIL SPRING

(a) Remove the nut, washer and separate the rear shock absorber w/coil spring (lower side) from the rear axle beam.

(b) Using the same manner desoribed above to the other side.

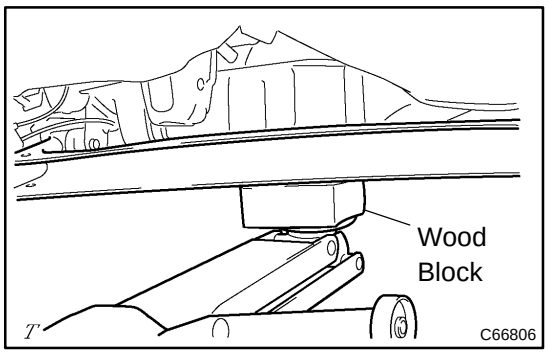

8. REMOVE REAR AXLE BEAM ASSY

(a) Support the rear axle beam with jack.

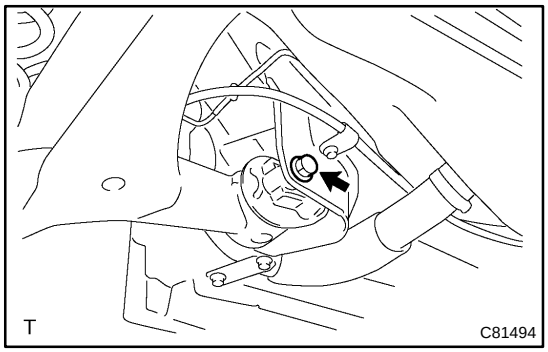

(b) Remove the 2 bolts, nuts and rear axle beam.

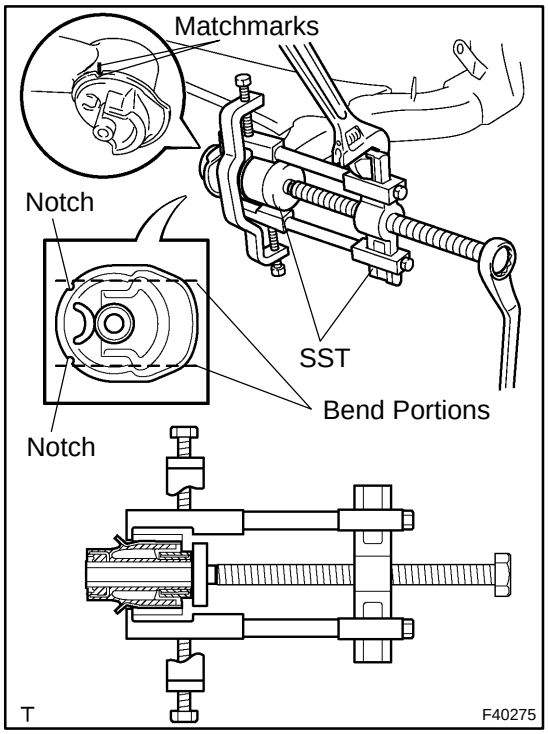

9. REMOVE REAR AXLE CARRIER BUSH LH

(a) Place matchmarks on the 2 notches of the bushing and axle beam.

(b) Using a chisel and a hammer, bend the 2 portions of the bushing rib.

HINT:

Bend the bushing rib until the claw of SST can be hung.

(c) Using SST, remove the bushing from the axle beam.

SST 09950–40011 (09951–04020, 09952–04010, 09953–04030, 09954–04020, 09955–04051, 09957–04010, 09958–04011), 09950–60010 (09951–00630)

NOTICE:

If the axle beam has been scratched, apply the paint.

10. REMOVE REAR AXLE CARRIER BUSH RH

HINT:

Remove the RH side by the same procedures with the LH side.

SST 09950–40011 (09951–04020, 09952–04010, 09953–04030, 09954–04020, 09955–04051, 09957–04010, 09958–04011), 09950–60010 (09951–00630)

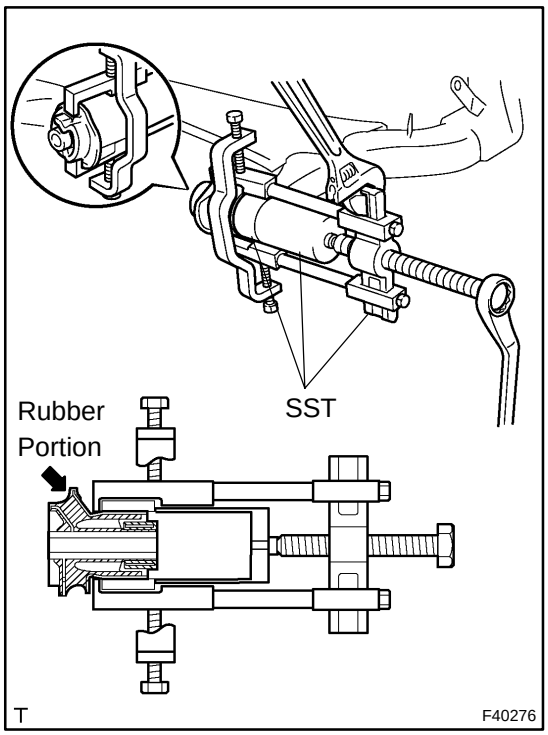

11. INSTALL REAR AXLE CARRIER BUSH LH

(a) Align the matchmarks on the axle beam with the 2 notches of a new bushing and temporarily install the bushing to the axle beam.

(b) Using SST, install the bushing to the axle beam.

SST 09950–40011 (09951–04020, 09952–04010, 09953–04030, 09954–04020, 09955–04051, 09957–04010, 09958–04011), 09950–60010 (09951–00620), 09710–04101

NOTICE:

- **Hang the claw of SST to the bushing deeply and firmly.**
- **Do not scratch the rubber portion of the bushing.**
- **Do not deform the bushing rib.**

12. INSTALL REAR AXLE CARRIER BUSH RH

HINT:

Install the RH side by the same procedures with the LH side.

SST 09950–40011 (09951–04020, 09952–04010, 09953–04030, 09954–04020, 09955–04051, 09957–04010, 09958–04011), 09950–60010 (09951–00620), 09710–04101

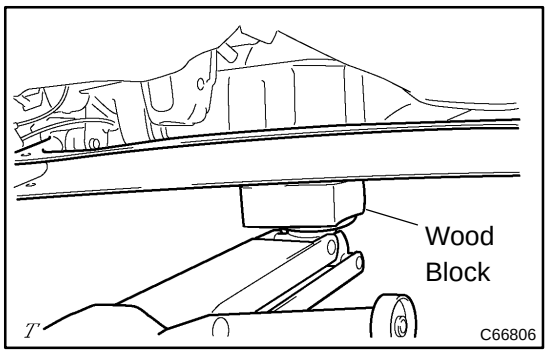

13. TEMPORARY TIGHTEN REAR AXLE BEAM ASSY

(a) Support the rear axle beam with jack.

(b) Install the rear axle beam, 2 bolts, and temporary tighten the 2 nuts.

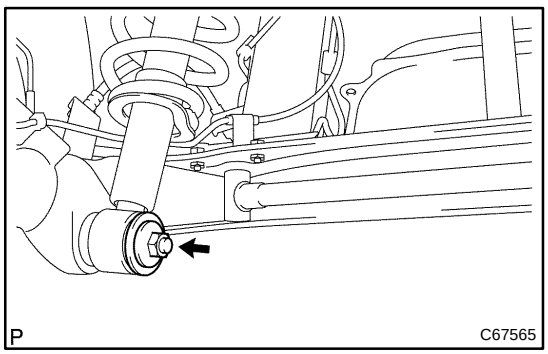

14. TEMPORARY TIGHTEN REAR SHOCK ABSORBER WITH COIL SPRING

(a) Install the rear shock absorber, washer and temporary tighten the nut.

(b) Using the same manner described above to the other side.

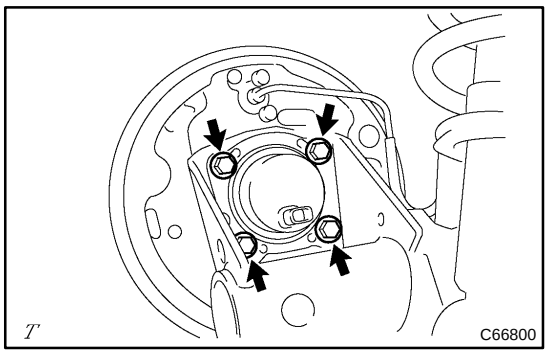

15. INSTALL REAR AXLE HUB & BEARING ASSY LH

(a) Install the rear axle hub with the 4 bolts.
Torque: 61 N·m (622 kgf·cm, 45 ft·lbf)

16. INSTALL REAR AXLE HUB & BEARING ASSY RH

HINT:

Install the RH side by the same procedures with the LH side.

17. INSTALL STABILIZER BAR REAR(See page 27–13)

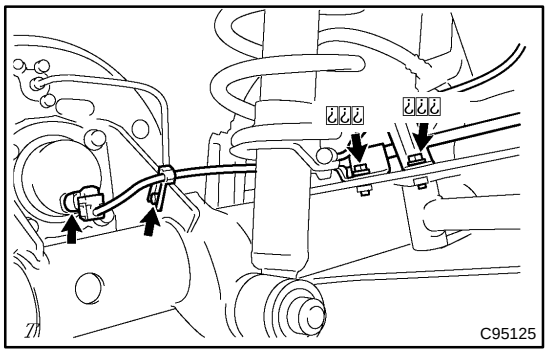

18. INSTALL SKID CONTROL SENSOR WIRE

(a) Install the wire harness and parking brake cable with the 2 bolts and clip.
Torque:
(A): 5.4 N·m (55 kgf·cm, 48 in.·lbf)
(B): 5.0 N·m (51 kgf·cm, 44 in.·lbf)

(b) Connect the skid control sensor connector.

(c) Using the same manner desoribed above to the other side.

19. INSTALL REAR BRAKE DRUM SUB–ASSY(See page 32–31)

20. STABILIZE SUSPENSION

(a) Install the rear wheel and jack down the vehicle.
Torque: 103 N·m (1,050 kgf·cm, 76 ft·lbf)

(b) Bounce the vehicle up and down several times to stabilize the suspension.

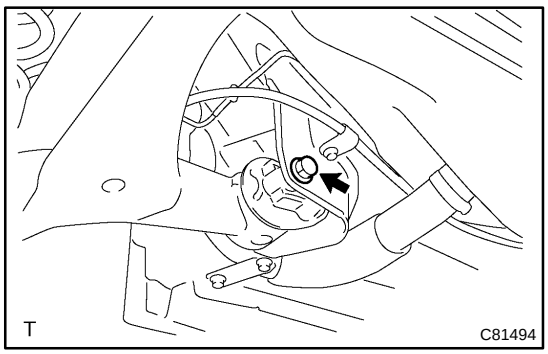

21. FULLY TIGHTEN REAR AXLE BEAM ASSY

(a) Fully tighten the bolt.
Torque: 85 N·m (867 kgf·cm, 62 ft·lbf)

(b) Using the same manner described above to the other side.

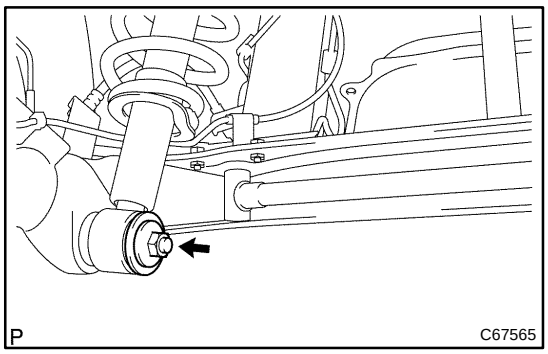

22. FULLY TIGHTEN REAR SHOCK ABSORBER WITH COIL SPRING

(a) Fully tighten the nut.
Torque: 80 N·m (816 kgf·cm, 59 ft·lbf)

(b) Using the same manner described above to the other side.

23. INSPECT REAR WHEEL ALIGNMENT(See page 27–3)

24. CHECK ABS SPEED SENSOR SIGNAL(See page 05–297)

2707Q–01

DISPOSAL

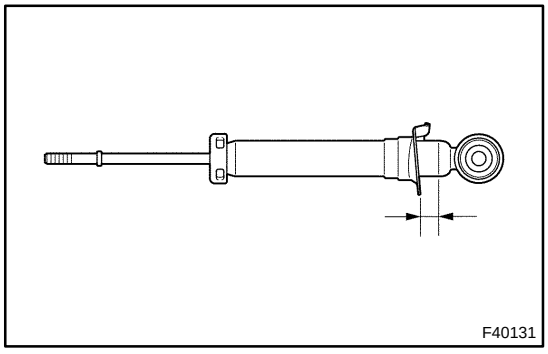

1. DISPOSE SHOCK ABSORBER ASSY REAR LH

(a) Fully extend the shock absorber rod.

(b) Using a drill, make a hole in the cylinder as shown in the illustration to discharge the gas inside.

CAUTION:

- **When drilling, chips may fly out, work carefully.**
- **The gas is colorless, odorless and non–poisonous.**

REAR SHOCK ABSORBER WITH COIL SPRING

2707R–01

OVERHAUL

HINT:

COMPONENTS: See page 27–2

1. REMOVE REAR WHEEL

2. REMOVE SPARE WHEEL COVER ASSY

3. REMOVE REAR FLOOR FINISH PLATE(See page 76–21)

4. REMOVE LUGGAGE COMPARTMENT TRIM COVER INNER LH(See page 76–21)

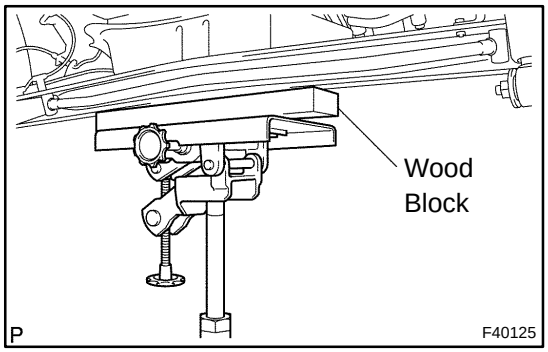

5. REMOVE REAR SHOCK ABSORBER WITH COIL SPRING

(a) Support the rear axle beam with jack.

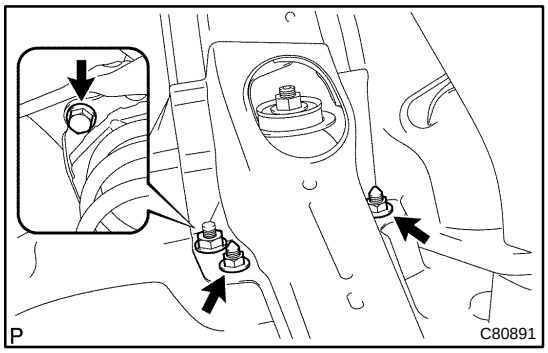

(b) Remove the 2 nuts and bolt.

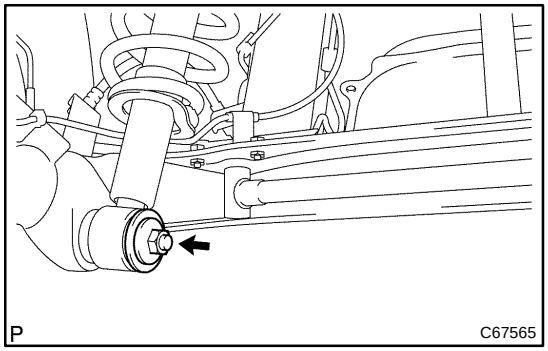

(c) Remove the nut, washer and shock absorber.

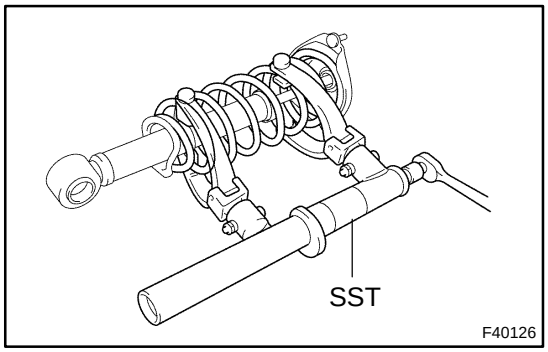

6. REMOVE SHOCK ABSORBER ASSY REAR LH

(a) Using SST, compress the coil spring.

SST 09727–30021

NOTICE:

Do not use an impact wrench. It will damage the SST.

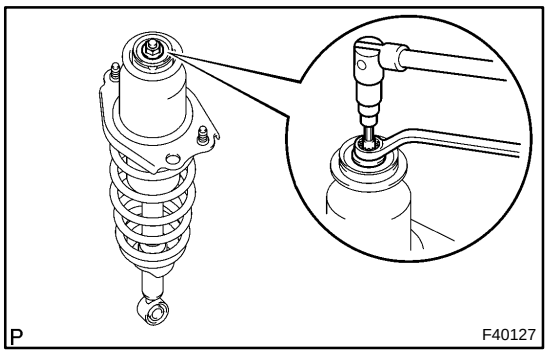

(b) Using a 6 mm hexagon wrench to hold the piston rod, remove the nut.
(c) Remove the support plate, cushion, spring bracket, upper insulator, suspension support, spring bumper and coil spring.

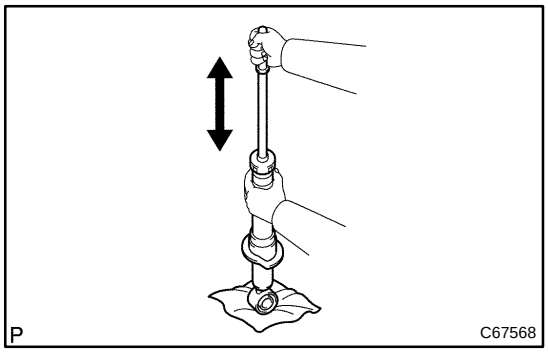

7. INSPECT SHOCK ABSORBER ASSY REAR LH

(a) Compress and extend the shock absorber rod and check that there is no abnormal resistance or unusual sound during operation.

If there is any abnormality, replace the shock absorber with a new one.

NOTICE:

When disposing the shock absorber, see DISPOSAL on page 27–7.

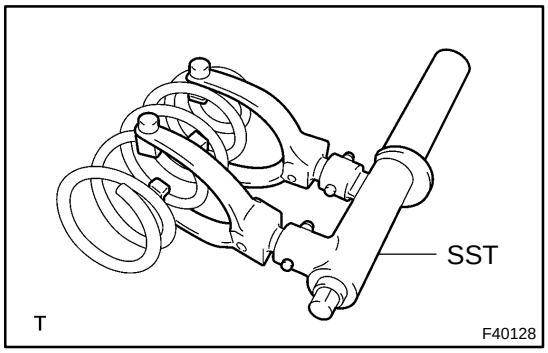

8. INSTALL SHOCK ABSORBER ASSY REAR LH

(a) Using SST, compress the coil spring.
SST 09727–30021

NOTICE:

Do not use an impact wrench. It will damage the SST.

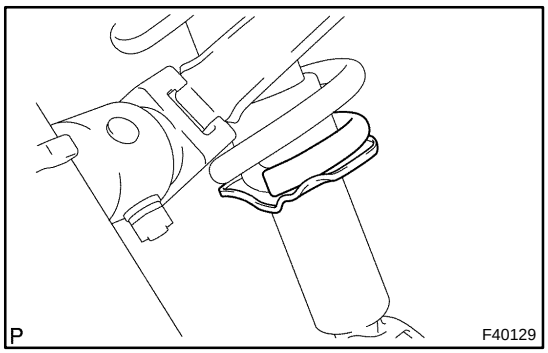

(b) Insert the coil spring to the shock absorber.

HINT:

Fit the lower end of the coil spring into the gap of the spring lower seat.

(c) Install the spring bumper and suspension support.
(d) Set the upper insulator to the spring bracket.

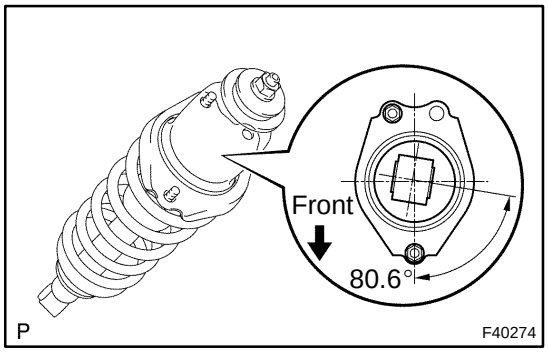

(e) Position the spring bracket with upper insulator as shown in the illustration.

HINT:

Place the RH side on the symmetric position to the illustration.

(f) Install the cushion and support plate.
(g) Temporarily tighten a new center nut.
(h) Remove the SST.
SST 09727–30021
(i) Recheck the direction of the spring bracket.

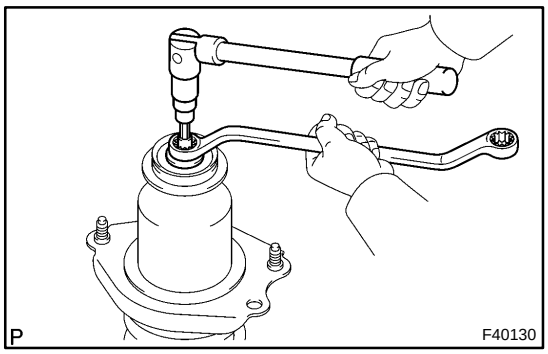

(j) Using a 6 mm hexagon wrench to hold the piston rod, tighten a new nut.
Torque: 56 N·m (571 kgf·cm, 41 ft·lbf)

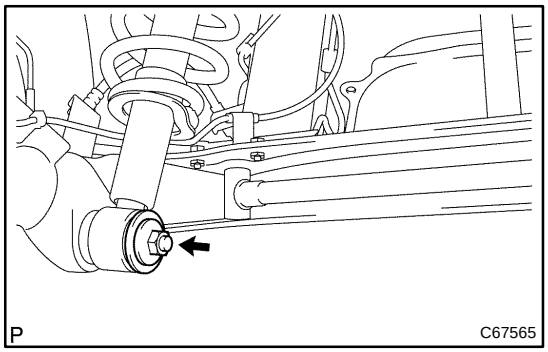

9. INSTALL REAR SHOCK ABSORBER WITH COIL SPRING

(a) Install the shock absorber, temporary tighten the nut and washer.

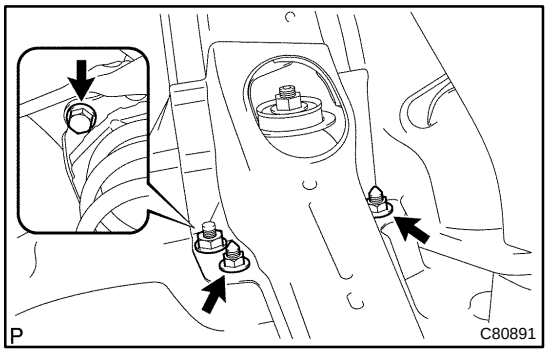

(b) Install the 2 nuts and bolt.
Torque: 80 N·m (816 kgf·cm, 59 ft·lbf)

10. STABILIZE SUSPENSION

(a) Install the rear wheel and jack down the vehicle.
Torque: 103 N·m (1,050 kgf·cm, 76 ft·lbf)

(b) Bounce the vehicle up and down several times to stabilize the suspension.

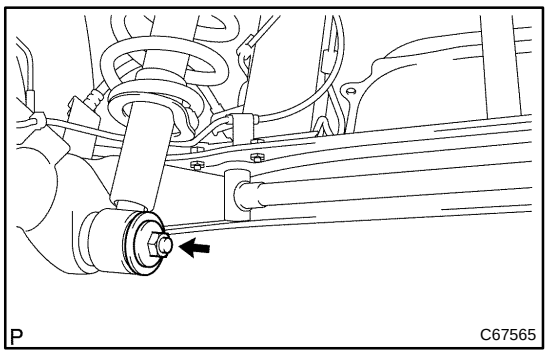

11. FULLY TIGHTEN REAR SHOCK ABSORBER WITH COIL SPRING

(a) Fully tighten the nut.
Torque: 80 N·m (816 kgf·cm, 59 ft·lbf)

12. INSPECT REAR WHEEL ALIGNMENT(See page 27–3)

STABILIZER BAR REAR

2707T–01

REPLACEMENT

HINT:

COMPONENTS: See page 27–2

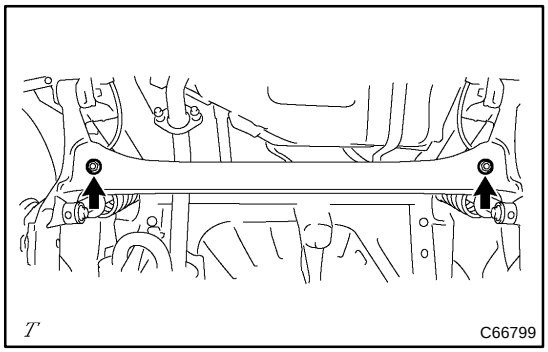

1. REMOVE STABILIZER BAR REAR

(a) Remove the 2 bolts, nuts and stabilizer bar.

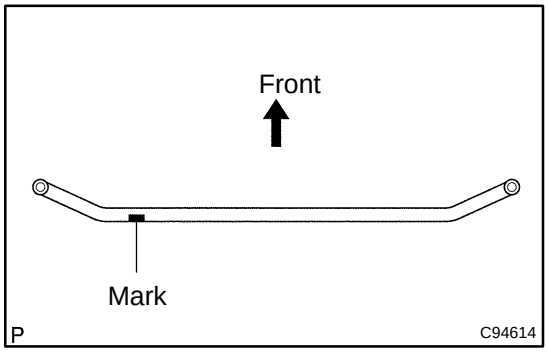

2. INSTALL STABILIZER BAR REAR

(a) Install the 2 bolts, nuts and stabilizer bar.

Torque: 195 N·m (1,990 kgf·cm, 144 ft·lbf)

HINT:

Install the stabilizer bar so that the mark is positioned onthe rear right side of the vehicle.

REAR SUSPENSION SYSTEM

2707N–01

PROBLEM SYMPTOMS TABLE

Use the table below to help you find the cause of the problem. The numbers indicate the priority of the likely cause of the problem. Check each part in order. If necessary, replace these parts.

Symptom	Suspect Area	See page
Wander/pulls	1. Tire (Worn or improperly inflated) 2. Wheel alignment (Incorrect) 3. Hub bearing (Worn) 4. Suspension parts (Worn)	28–1 27–3 30–24 –
Bottoming	1. Vehicle (Overloaded) 2. Spring (Weak) 3. Shock absorber (Worn)	– 27–4 27–4
Sways/pitches	1. Tire (Worn or improperly inflated) 2. Stabilizer bar (Bent or broken) 3. Shock absorber (Worn)	28–1 27–13 27–4
Rear wheel shimmy	1. Tire (Worn or improperly inflated) 2. Wheel (Out of balance) 3. Shock absorber (Worn) 4. Wheel alignment (Incorrect)	28–1 28–1 27–4 27–3
Abnormal tire wear	1. Tire (Worn or improperly inflated) 2. Wheel alignment (Incorrect) 3. Shock absorber (Worn) 4. Suspension parts (Worn)	28–1 27–3 27–4 –

WHEEL AND TIRE SYSTEM

28027–01

INSPECTION

1. INSPECT TIRE

(a) Check the tires for wear and proper inflation pressure.

Cold tire inflation pressure:

Tire size	Front Rear kPa (kgf·cm^2, psi)
P185/65R15 86S P195/65R15 89S P195/65R15 89H	210 (2.1, 30)

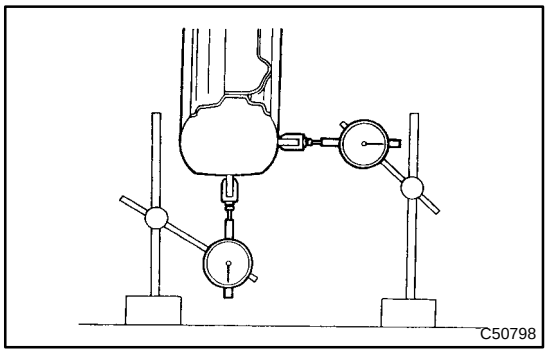

(b) Using a dial indicator, check the tire runout.

Tire runout: 3.0 mm (0.118 in.) or less

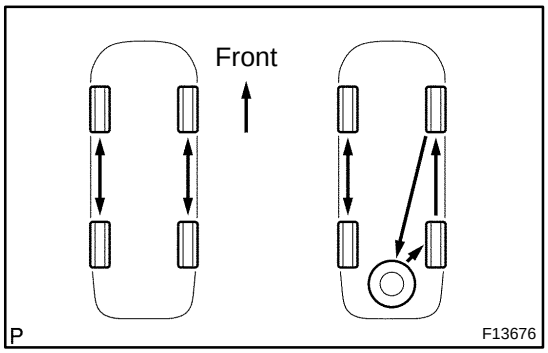

2. ROTATE TIRE

HINT:

See the illustration for where to rotate each tire when you include the spare tire in the rotation and when you do not.

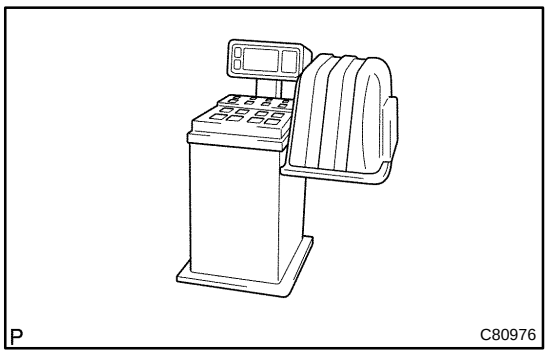

3. INSPECT WHEEL BALANCE

(a) Check and adjust the Off–the–car balance.

(b) If necessary, check and adjust the On–the–car balance.

Imbalance after adjustment: 8.0 g (0.018 lb) or less

4. INSPECT BEARING BACKLASH(See page 30–2)

5. INSPECT AXLE HUB DEVIATION(See page 30–2)

FRONT AXLE HUB SUB–ASSY LH

300A3–02

COMPONENTS

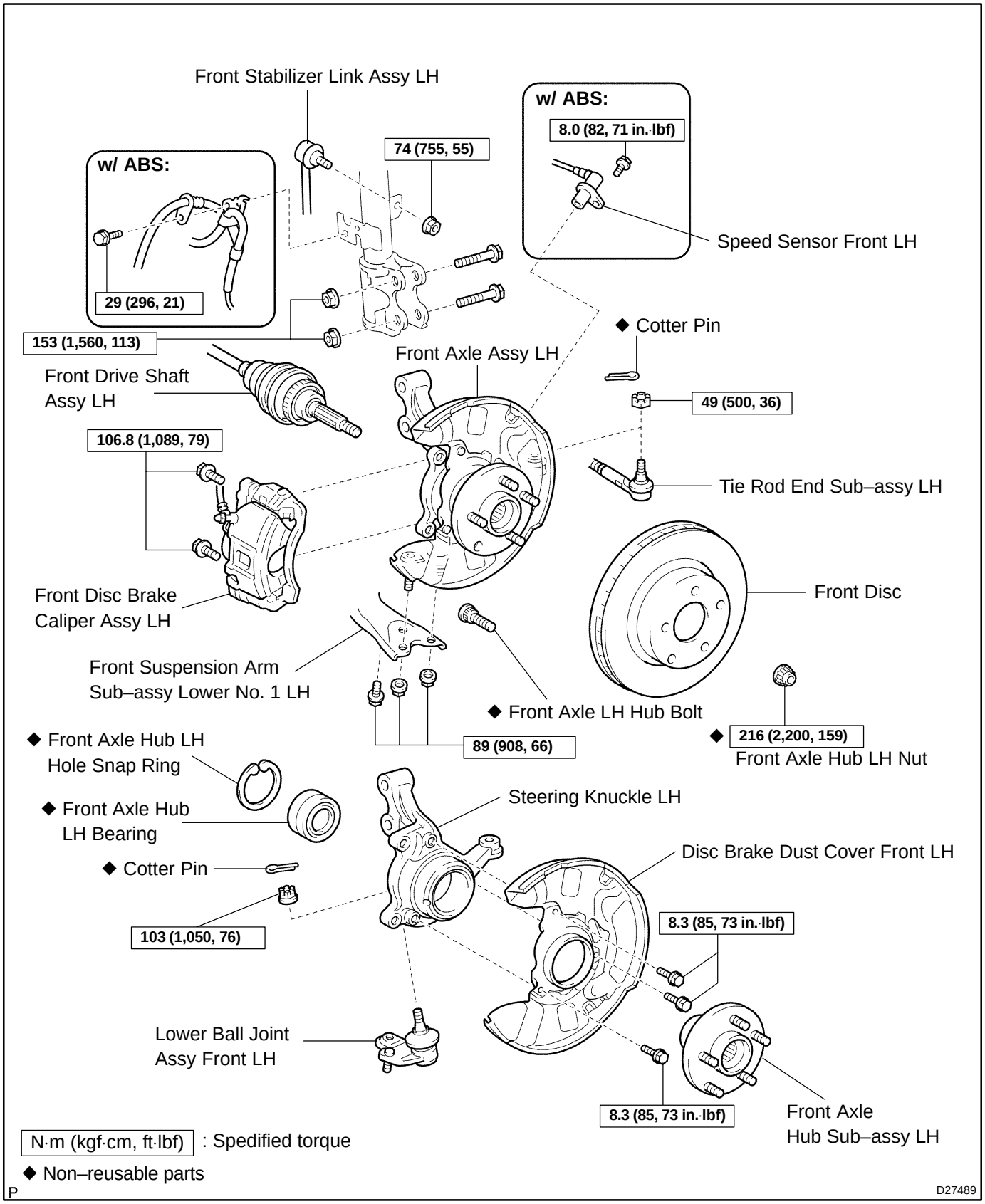

300A4–04

REPLACEMENT

HINT:

COMPONENTS: See page 30–16

1. **REMOVE FRONT WHEEL**
2. **REMOVE FRONT AXLE HUB LH NUT (See page 30–6)**
   SST 09930–00010
3. **SEPARATE FRONT STABILIZER LINK ASSY LH (See page 30–6)**
4. **SEPARATE SPEED SENSOR FRONT LH (W/ ABS) (See page 30–6)**

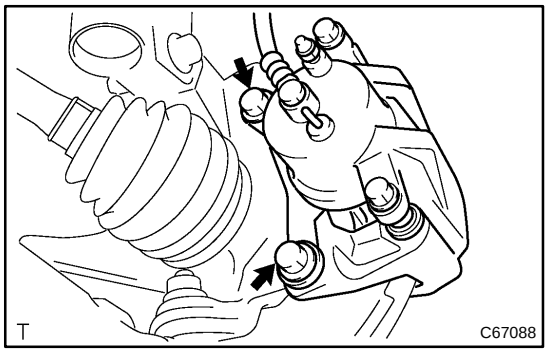

5. **SEPARATE FRONT DISC BRAKE CALIPER ASSY LH**

(a) Remove the 2 bolts, separate the brake caliper assy LH from the steering knuckle.

6. **REMOVE FRONT DISC**
7. **SEPARATE TIE ROD END SUB–ASSY LH (See page 30–6)**
   SST 09628–62011
8. **SEPARATE FRONT SUSPENSION ARM SUB–ASSY LOWER NO.1 LH (See page 30–6)**

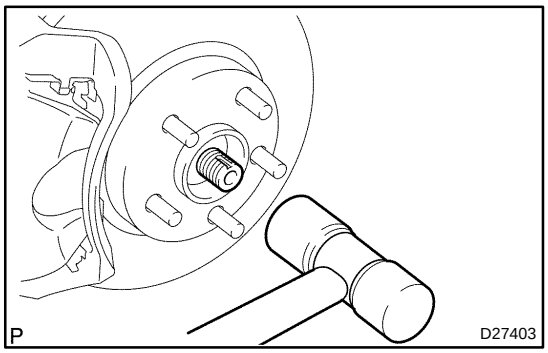

9. **REMOVE FRONT AXLE ASSY LH**

(a) Using a plastic hammer, separate the front drive shaft assy LH from the axle hub.

NOTICE:

- **Be careful not to damage the boot.**
- **w/ ABS:**
  Be careful not to damage the speed sensor rotor.

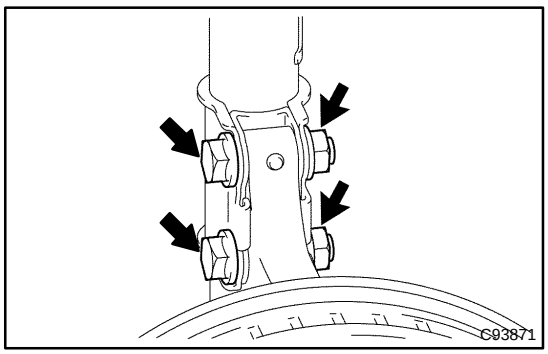

(b) Remove the 2 bolts, nuts and front axle assy LH.

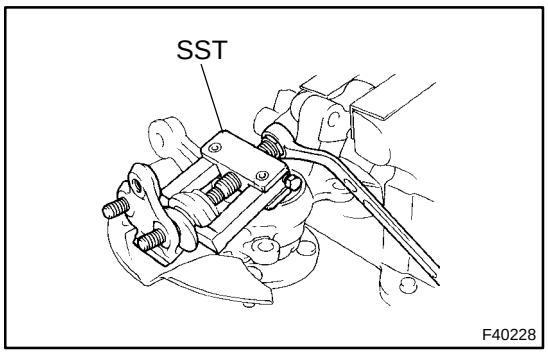

10. REMOVE LOWER BALL JOINT ASSY FRONT LH

(a) Remove the cotter pin and nut.

(b) Using SST, remove the lower ball joint assy front LH.
SST 09628–62011

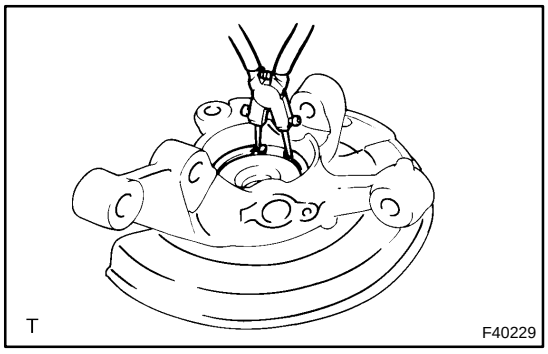

11. REMOVE FRONT AXLE HUB LH HOLE SNAP RING

(a) Using a snap ring pliers, remove the LH hole snap ring.

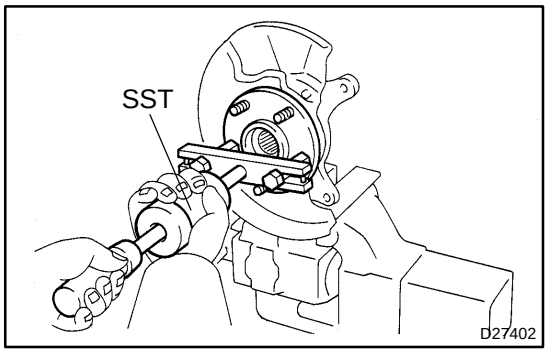

12. REMOVE FRONT AXLE HUB SUB–ASSY LH

(a) Using SST, remove the hub sub–assy LH.
SST 09520–00031

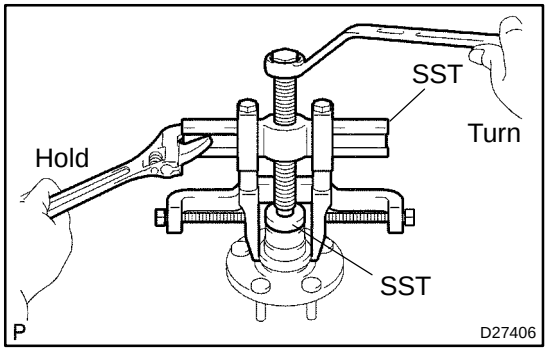

(b) Using SST, remove the inner race of hub LH bearing from the hub sub–assy LH.
SST 09950–40011 (09951–04020, 09952–04010, 09953–04030, 09954–04010, 09955–04061, 09957–04010, 09958–04011), 09950–60010 (09951–00370)

13. REMOVE DISC BRAKE DUST COVER FRONT LH

(a) Remove the 3 bolts and dust cover front LH.

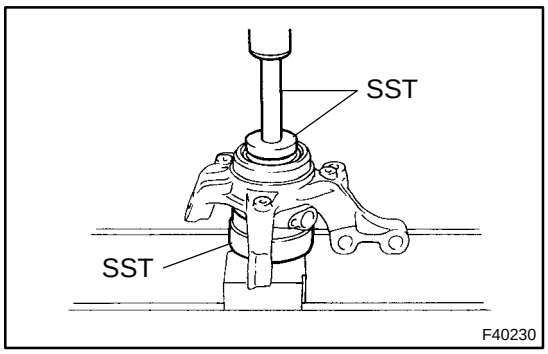

14. REMOVE FRONT AXLE HUB LH BEARING

(a) Place the inner race of hub LH bearing on the outer race of hub LH bearing.

(b) Using SST and a press, remove the hub LH bearing from the steering knuckle.

SST 09527–17011, 09950–60010 (09951–00640), 09950–70010 (09951–07100)

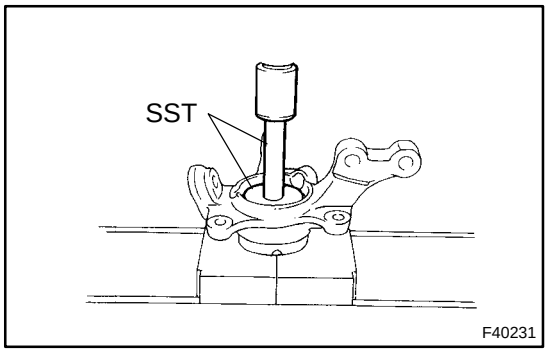

15. INSTALL FRONT AXLE HUB LH BEARING

(a) Using SST and a press, install a new hub LH bearing to the steering knuckle.

SST 09950–60020 (09951–00720), 09950–70010 (09951–07100)

16. INSTALL DISC BRAKE DUST COVER FRONT LH

(a) Install the dust cover front LH with the 3 bolts.

Torque: 8.3 N·m (85 kgf·cm, 73 in.·lbf)

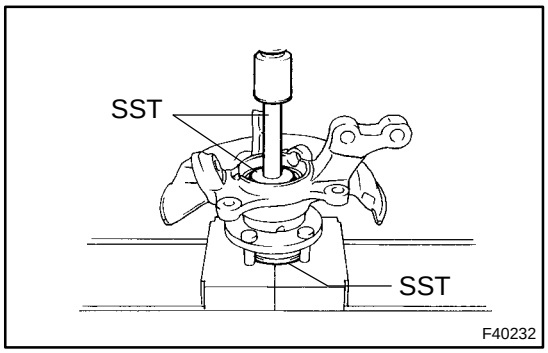

17. INSTALL FRONT AXLE HUB SUB–ASSY LH

(a) Using SST and a press, install the hub sub–assy LH.

SST 09608–32010, 09950–60010 (09951–00600), 09950–70010 (09951–07100)

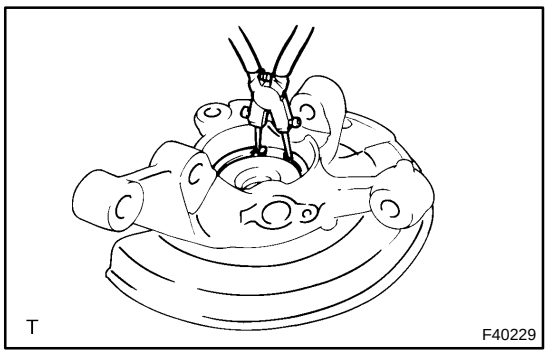

18. INSTALL FRONT AXLE HUB LH HOLE SNAP RING

(a) Using snap ring pliers, install a new LH hole snap ring.

19. INSTALL LOWER BALL JOINT ASSY FRONT LH

(a) Install the lower ball joint assy front LH, torque the nut.
Torque: 103 N·m (1,050 kgf·cm, 76 ft·lbf)

(b) Install a new cotter pin.

NOTICE:
If the holes for the cotter pin are not aligned, tighten the nut further up to 60°.

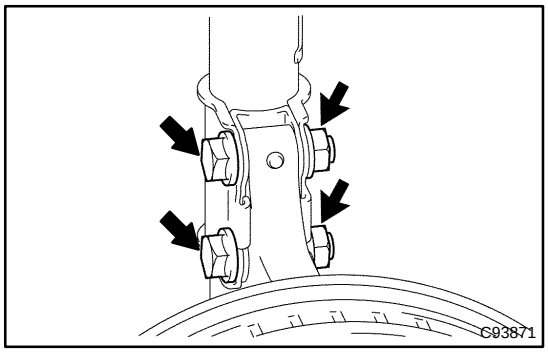

20. INSTALL FRONT AXLE ASSY LH

(a) Install the 2 bolts, nuts and front axle assy LH to the shock absorber.
Torque: 153 N·m (1,560 kgf·cm, 113 ft·lbf)

NOTICE:
Only when reusing the bolts and nuts, apply engine oil to the screw part of the nuts.

(b) Push the front axle assy toward the outside of the vehicle, fit the splined part of the drive shaft assy to that of the front axle assy, insert the drive shaft assy into the front axle assy.

NOTICE:
- **Do not push out the front axle assy excessively.**
- **Be careful not to damage the drive shaft outboard joint boot.**
- **w/ ABS:**
  Be careful not to damage the speed sensor rotor.

21. INSTALL FRONT SUSPENSION ARM SUB–ASSY LOWER NO.1 LH (See page 30–6)

22. INSTALL TIE ROD END SUB–ASSY LH (See page 30–6)

23. INSTALL FRONT STABILIZER LINK ASSY LH (See page 30–6)

24. INSTALL FRONT DISC

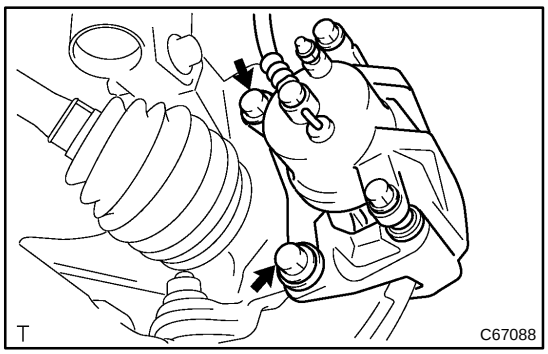

25. INSTALL FRONT DISC BRAKE CALIPER ASSY LH

(a) Install the brake caliper assy LH with the 2 bolts to the steering knuckle.
Torque: 106.8 N·m (1,089 kgf·cm, 79 ft·lbf)

26. INSTALL FRONT AXLE HUB LH NUT

(a) Using a socket wrench (30 mm), install a new hub LH nut.
Torque: 216 N·m (2,203 kgf·cm, 159 ft·lbf)

27. SEPARATE FRONT DISC BRAKE CALIPER ASSY LH

28. REMOVE FRONT DISC

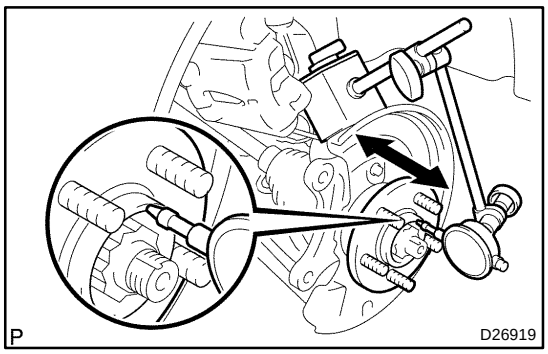

29. INSPECT BEARING BACKLASH

(a) Using a dial indicator, check the backlash near the center of the axle hub.

Maximum: 0.05 mm (0.0020 in.)

If the backlash exceeds the maximum, replace the front axle hub bearing.

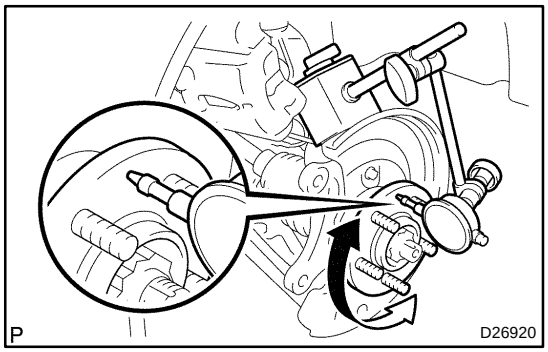

30. INSPECT AXLE HUB DEVIATION

(a) Using a dial indicator, check the deviation at the surface of the axle hub outside the hub bolt.

Maximum: 0.05 mm (0.0020 in.)

If the backlash exceeds the maximum, replace the front axle hub sub–assy.

31. INSTALL FRONT DISC

32. INSTALL FRONT DISC BRAKE CALIPER ASSY LH

33. INSTALL SPEED SENSOR FRONT LH (W/ ABS) (See page 30–6)

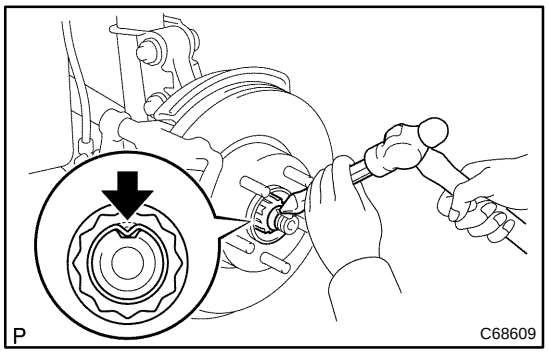

34. INSTALL FRONT AXLE HUB LH NUT

(a) Using a chisel and a hammer, stake the hub LH nut.

35. INSTALL FRONT WHEEL

Torque: 103 N·m (1,050 kgf·cm, 76 ft·lbf)

36. INSPECT AND ADJUST FRONT WHEEL ALIGNMENT (See page 26–5)

37. CHECK ABS SPEED SENSOR SIGNAL (W/ ABS) (See page 05–297)

FRONT AXLE LH HUB BOLT

300A5–02

REPLACEMENT

HINT:

COMPONENTS: See page 30–16

1. REMOVE FRONT WHEEL

2. SEPARATE FRONT DISC BRAKE CALIPER ASSY LH (See page 30–17)

3. REMOVE FRONT DISC

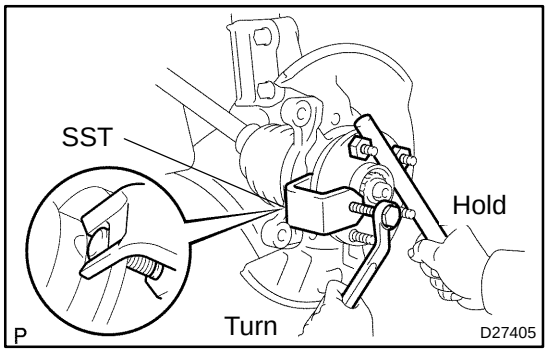

4. REMOVE FRONT AXLE LH HUB BOLT

(a) Using SST and a hammer handle or an equivalent, remove the LH hub bolt.

SST 09628–10011

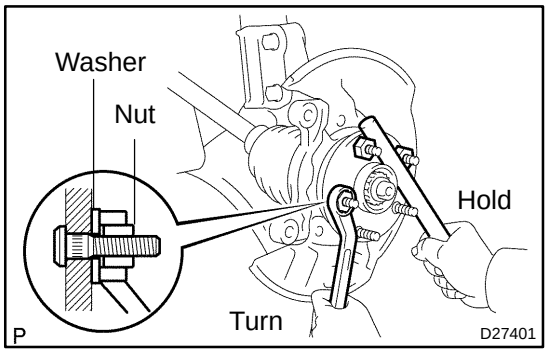

5. INSTALL FRONT AXLE LH HUB BOLT

(a) Install a washer and nut to a new LH hub bolt as shown in the illustllation.

(b) Using a hammer handle or an equivalent to hold the hub sub–assy LH, install the LH hub bolt by tightening the nut.

6. INSTALL FRONT DISC

7. INSTALL FRONT DISC BRAKE CALIPER ASSY LH (See page 30–17)

8. INSTALL FRONT WHEEL

Torque: 103 N·m (1,050 kgf·cm, 76 ft·lbf)

FRONT DRIVE SHAFT

COMPONENTS

300A1–02

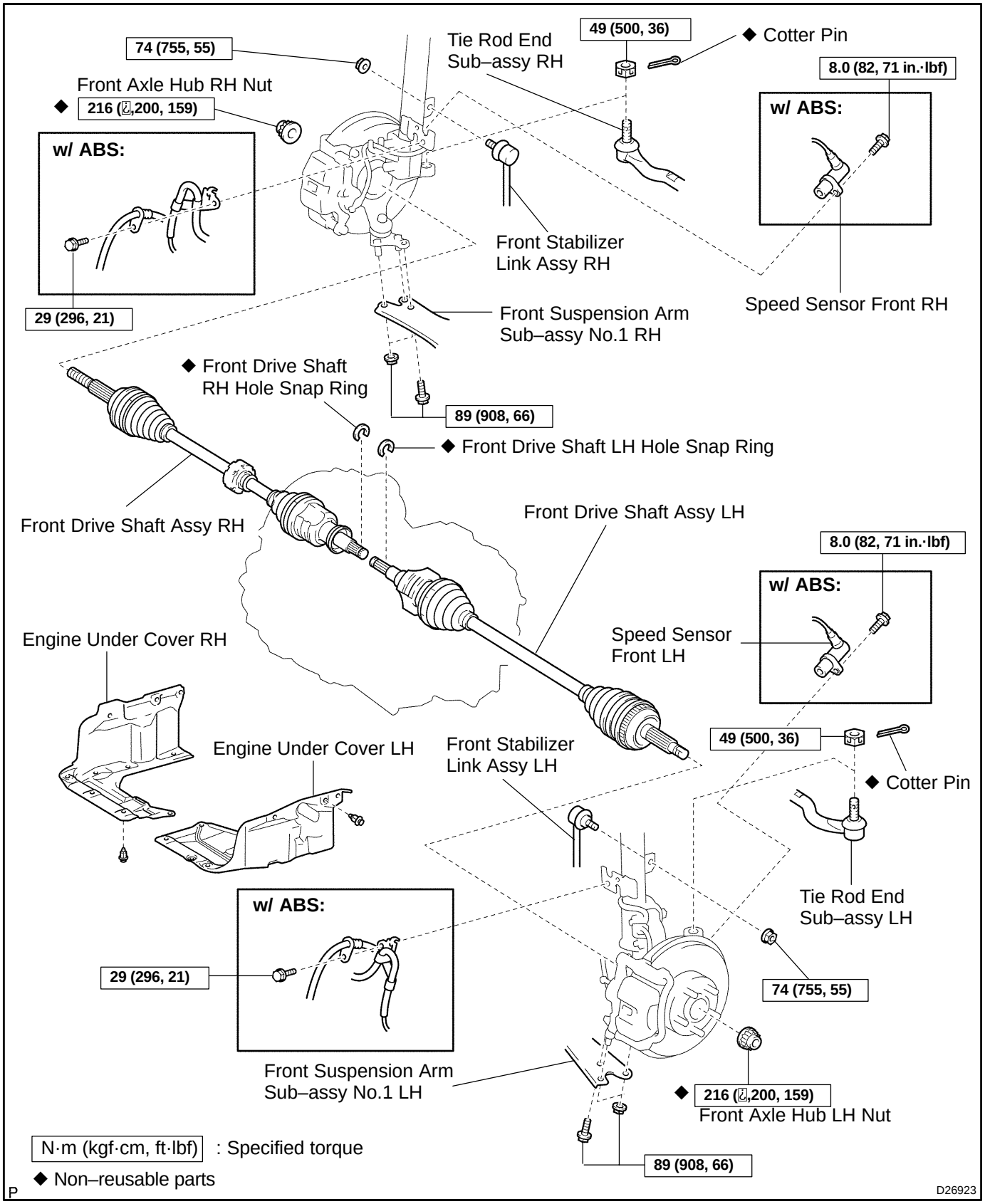

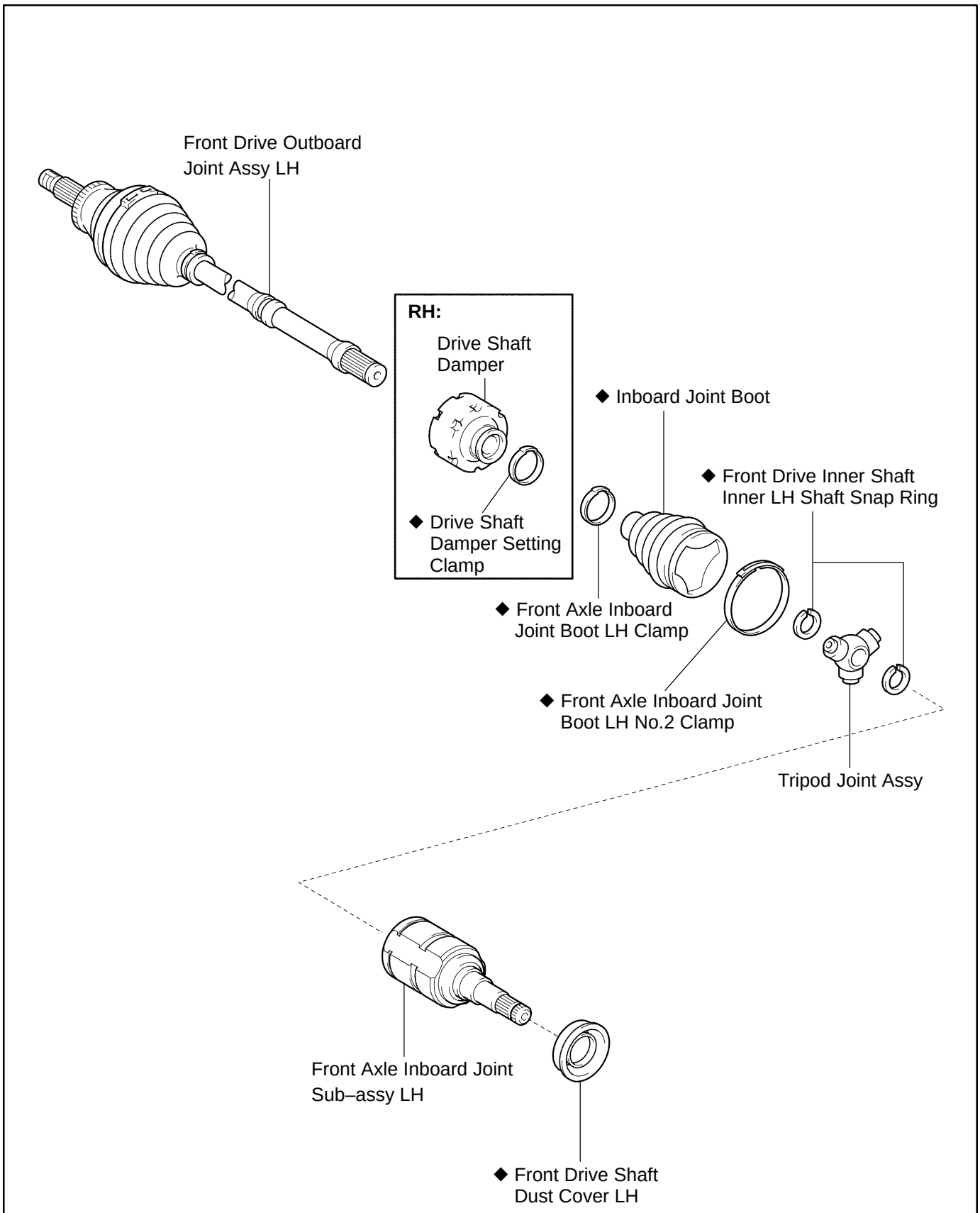
Front Drive Outboard
Joint Assy LH
RH:
Drive Shaft
Damper
◆ Drive Shaft
Damper Setting
Clamp
◆ Inboard Joint Boot
◆ Front Drive Inner Shaft
Inner LH Shaft Snap Ring
◆ Front Axle Inboard
Joint Boot LH Clamp
◆ Front Axle Inboard Joint
Boot LH No.2 Clamp
Tripod Joint Assy
Front Axle Inboard Joint
Sub–assy LH
◆ Front Drive Shaft
Dust Cover LH
◆ Non–reusable parts
P
D26924

300AS–02

OVERHAUL

HINT:

COMPONENTS: See page 30–4

1. **DRAIN MANUAL TRANSAXLE OIL (M/T TRANSAXLE)**
   Torque: 39.2 N·m (400 kgf·cm, 29 ft·lbf)
2. **DRAIN AUTOMATIC TRANSAXLE FLUID (A/T TRANSAXLE)**
   Torque: 17.5 N·m (178 kgf·cm, 13 ft·lbf)
3. **REMOVE FRONT WHEEL**
4. **REMOVE ENGINE UNDER COVER LH**

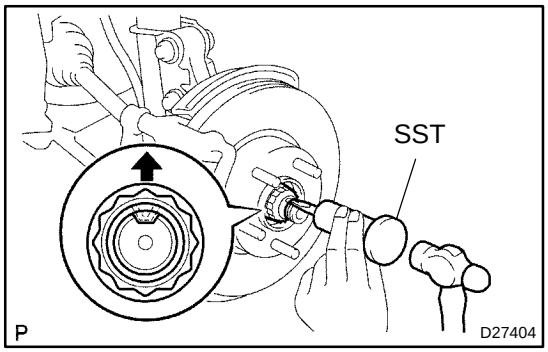

5. **REMOVE FRONT AXLE HUB LH NUT**

(a) Using SST and a hammer, unstake the staked part of the hub LH nut.
SST 09930–00010

(b) While applying the brakes, remove the hub LH nut.

NOTICE:

Loosen the staked part of the nut completely, otherwise the screw of the drive shaft may be damaged.

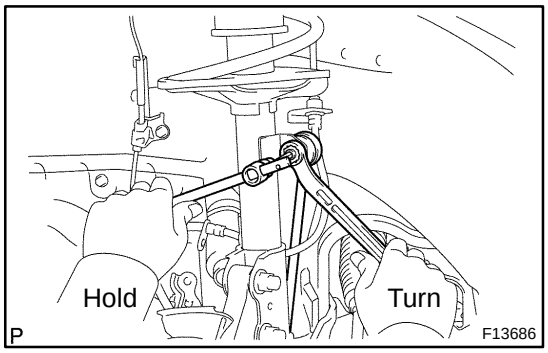

6. **SEPARATE FRONT STABILIZER LINK ASSY LH**

(a) Remove the nut, separate the front stabilizer link assy LH from the shock absorber assy front LH.

HINT:

If the ball joint turns together with the nut, use a hexagon wrench (6 mm) to hold the stud.

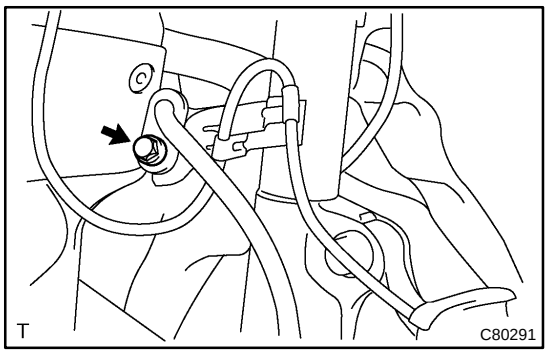

7. **SEPARATE SPEED SENSOR FRONT LH (W/ ABS)**

(a) Remove the bolt, separate the speed sensor front LH and flexible hose from the shock absorber assy front LH.

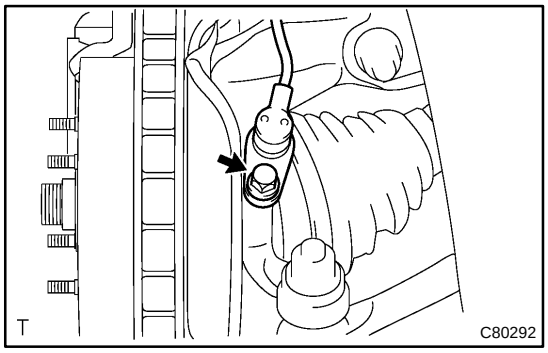

(b) Remove the bolt, separate the speed sensor front LH from the steering knuckle.

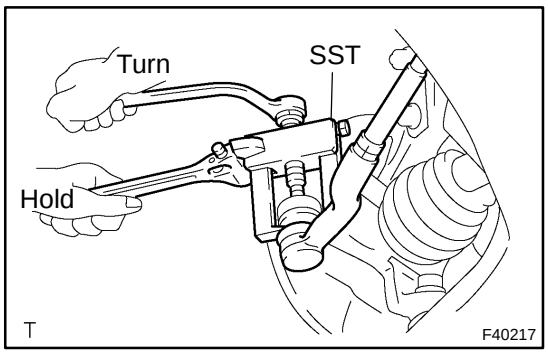

8. SEPARATE TIE ROD END SUB–ASSY LH

(a) Remove the cotter pin and nut.

(b) Using SST, separate the tie rod end sub–assy LH from the steering knuckle.
SST 09628–62011

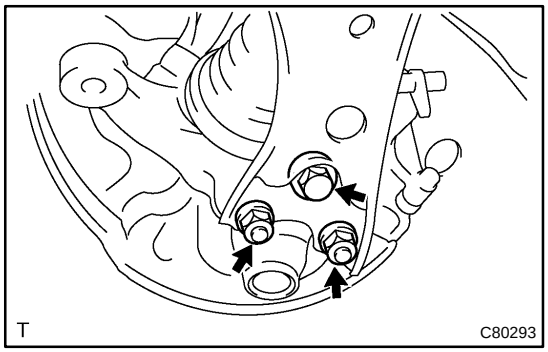

9. SEPARATE FRONT SUSPENSION ARM SUB–ASSY LOWER NO.1 LH

(a) Remove a bolt and 2 nuts, separate the front suspension arm sub–assy lower No.1 LH from the lower ball joint.

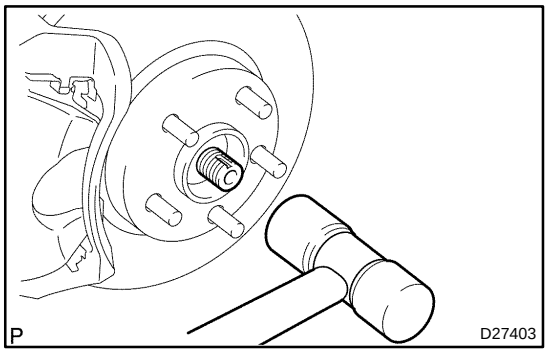

10. SEPARATE FRONT AXLE ASSY LH

(a) Using a plastic hammer, separate the front drive shaft assy LH from the front axle assy LH.

NOTICE:

- **Be careful not to damage the boot.**
- **w/ ABS:**
  Be careful not to damage the speed sensor rotor.

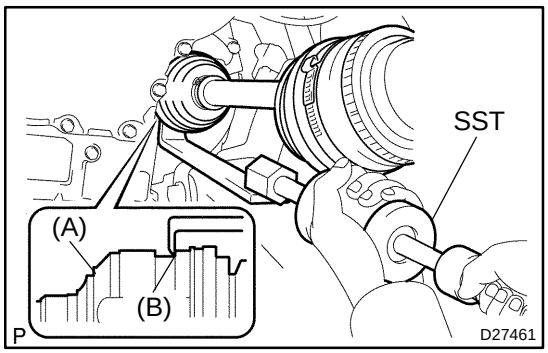

11. REMOVE FRONT DRIVE SHAFT ASSY LH

(a) Using SST, remove the front drive shaft assy LH.
SST 09520–01010, 09520–24010 (09520–32040)

NOTICE:

Be careful not to damage the dust cover and oil seal.

HINT:

In case of not being able to remove the drive shaft at the position of the illustration (A), hook the claw of SST to the position of the illustration (B), remove it.

12. REMOVE FRONT DRIVE SHAFT ASSY RH

HINT:

Remove the RH side by the same procedures as the LH side.

NOTICE:

Be careful not to damage the dust cover and oil seal.

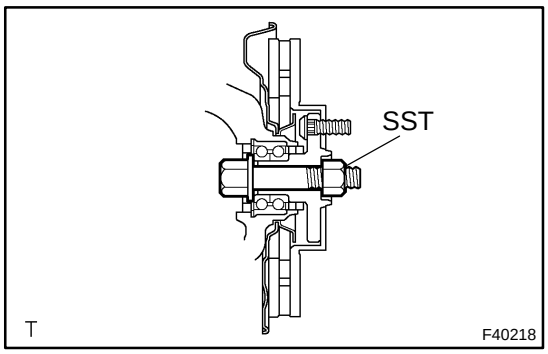

13. FIX FRONT AXLE ASSY LH

NOTICE:

The hub bearing could be damaged if it is subjected to the vehicle weight, such as when moving the vehicle with the drive shaft removed.

Therefore, make sure to support the hub bearing with SST when the vehicle weight is applied.

SST 09608–16042 (09608–02021, 09608–02041)

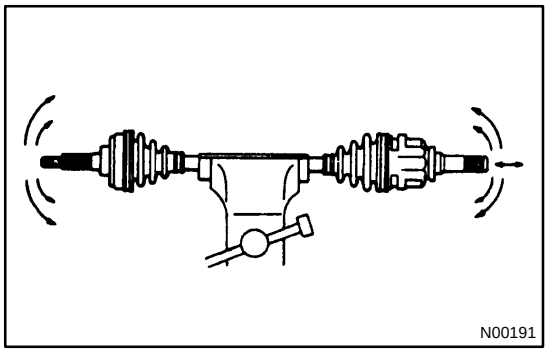

14. INSPECT FRONT DRIVE SHAFT ASSY LH

(a) Check that there is no remarkable play in the outboard joint.

(b) Check that the inboard joint slides smoothly in the thrust direction.

(c) Check that there is no remarkable play in the radial direction of the inboard joint.

(d) Check the boots for damage.

NOTICE:

Keep the drive shaft assy level during inspection.

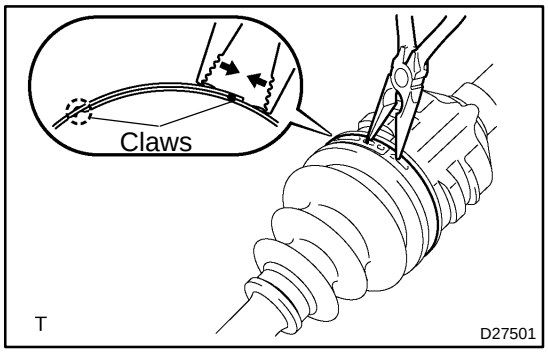

15. REMOVE FRONT AXLE INBOARD JOINT BOOT LH NO.2 CLAMP

(a) Using a needle nose pliers, remove the inboard joint boot LH No.2 clamp as shown in the illustration.

16. REMOVE FRONT AXLE INBOARD JOINT BOOT LH CLAMP

(a) Using a side cutter, cut the inboard joint boot LH clamp, then remove it.

17. SEPARATE INBOARD JOINT BOOT

(a) Separate the inboard joint boot from the inboard joint sub–assy LH.

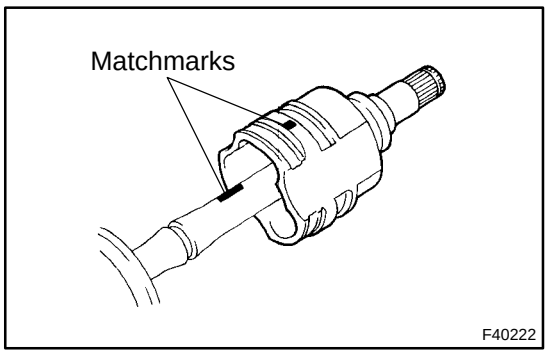

18. REMOVE FRONT AXLE INBOARD JOINT SUB–ASSY LH

(a) Remove the old grease from the inboard joint sub–assy LH.

(b) Place matchmarks on the inboard joint sub–assy LH and outboard joint shaft assy.

NOTICE:

Do not punch the marks.

(c) Remove the inboard joint sub–assy LH from the outboard joint shaft assy.

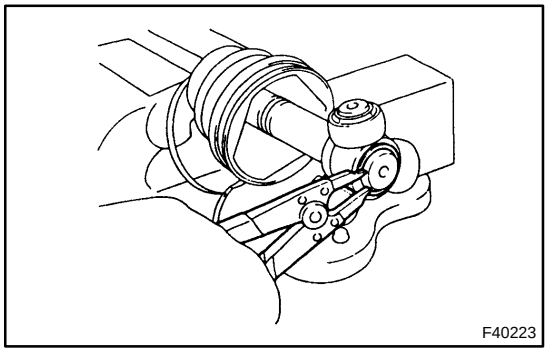

(d) Using a snap ring expander, remove the inner LH shaft snap ring.

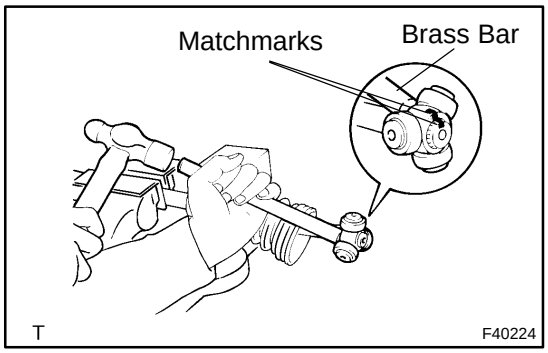

(e) Place matchmarks on the outboard joint shaft assy and tripod joint assy.

NOTICE:

Do not punch the marks.

(f) Using a brass bar and a hammer, remove the tripod joint assy from the outboard joint shaft assy.

NOTICE:

Do not tap the roller.

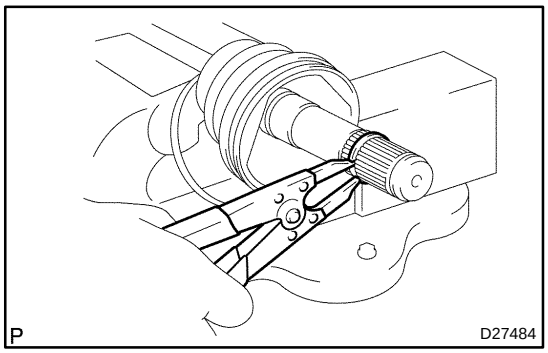

(g) Using a snap ring expander, remove the inner LH shaft snap ring.

(h) Remove the inboard joint boot LH No.2 clamp, inboard joint boot and inboard joint boot LH clamp.

19. REMOVE DRIVE SHAFT DAMPER (RH DRIVE SHAFT)

(a) Using a side cutter, cut the drive shaft damper setting clamp, then remove it.

(b) Remove the drive shaft damper.

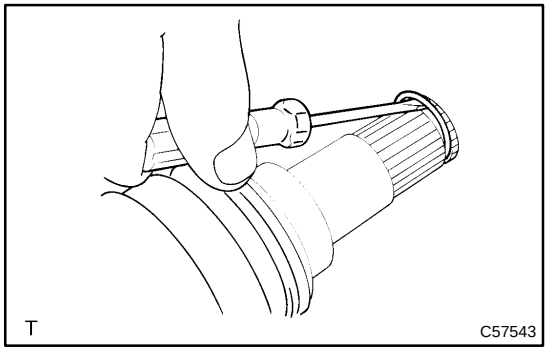

20. REMOVE FRONT DRIVE SHAFT LH HOLE SNAP RING

(a) Using a screwdriver, remove the LH hole snap ring.

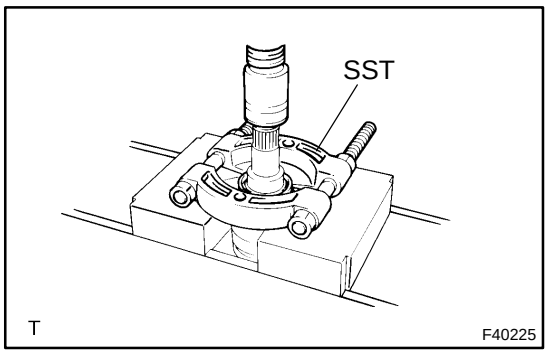

21. REMOVE FRONT DRIVE SHAFT DUST COVER LH

(a) Using SST and a press, remove the dust cover LH.
SST 09950–00020

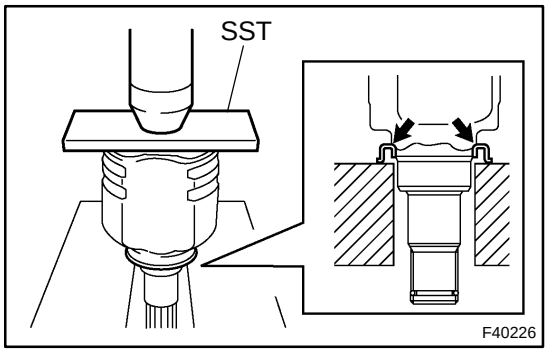

22. INSTALL FRONT DRIVE SHAFT DUST COVER LH

(a) Using SST and a press, install a new dust cover LH, as shown in the illustration.
SST 09527–10011

NOTICE:

- **Dust cover should be installed completely.**
- **Be careful not to damage the dust cover.**

23. INSTALL FRONT DRIVE SHAFT LH HOLE SNAP RING

(a) Install a new LH hole snap ring.

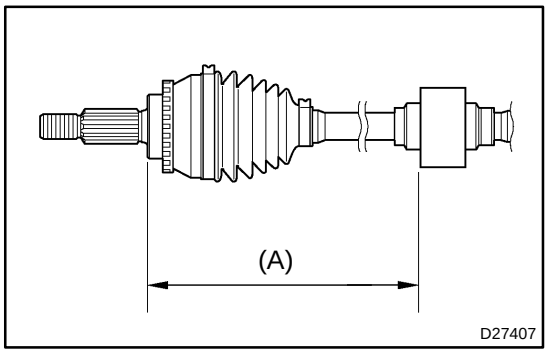

24. INSTALL DRIVE SHAFT DAMPER (RH DRIVE SHAFT)

(a) Set the distance, as described below.

Distance (A)	440 mm ± 2 mm (17.32 ± 0.08 in.)

(b) Through the damper setting clamp to the shaft.

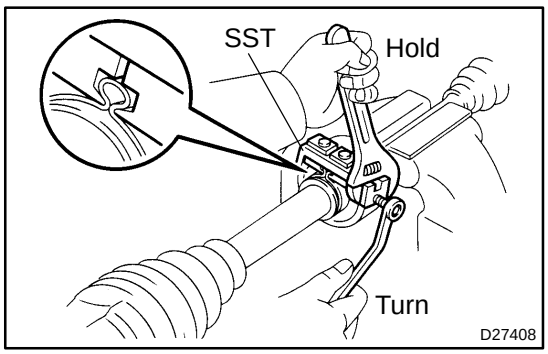

(c) Mount drive shaft in a soft vise.
(d) Secure the damper setting clamp onto the damper.
(e) Place SST onto the damper setting clamp.
SST 09521–24010
(f) Tighten the SST so that the clamp is pinched.

NOTICE:

Do not overtighten the SST.

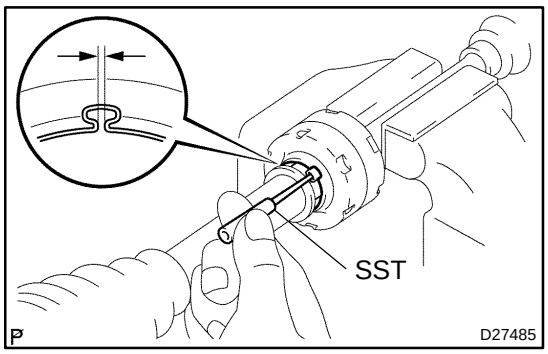

(g) Using SST, adjust the clearance of the damper setting clamp.
SST 09240–00020 (09242–00150)
Clearance: 1.5 mm (0.059 in.) or less

25. INSTALL FRONT AXLE INBOARD JOINT SUB–ASSY LH

HINT:
Before installing the boot, wrap the spline of the drive shaft with vinyl tape to prevent the boot from being damaged.

(a) Install new parts to the outboard joint shaft assy in the following order.
(1) Inboard joint boot LH clamp
(2) Inboard joint boot
(3) Inboard joint boot LH No.2 clamp

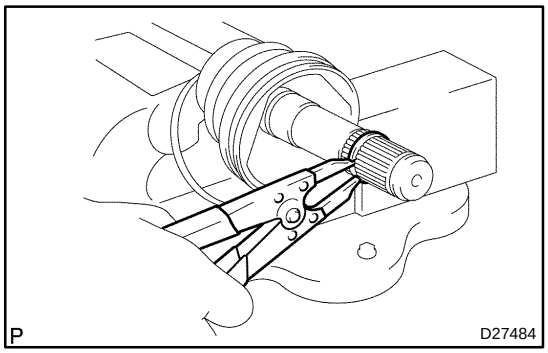

(b) Using a snap ring expander, install a new inner LH shaft snap ring.

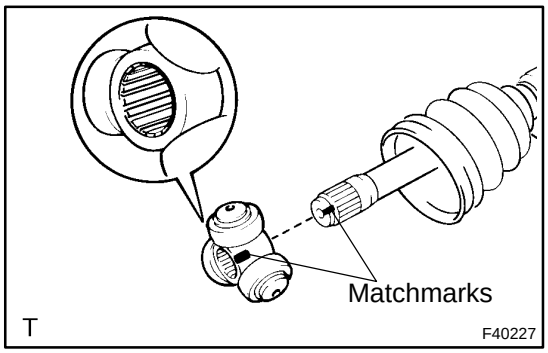

(c) Align the matchmarks, install tripod joint assy to the outboard joint assy.
(d) Using a brass bar and a hammer, install the tripod joint assy.

NOTICE:
Do not tap the roller.

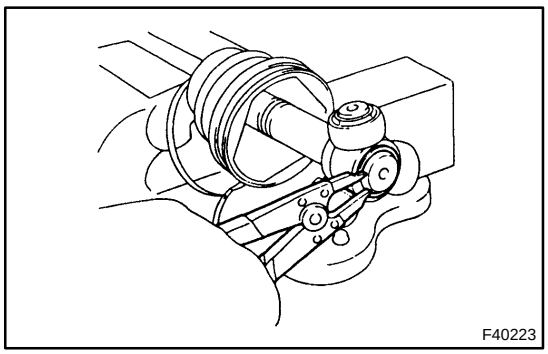

(e) Using a snap ring expander, install a new inner LH shaft snap ring.
(f) Pack the inboard joint sub–assy LH with grease.
Grease Capacity: 135 – 155 g (4.8 – 5.5 oz.)

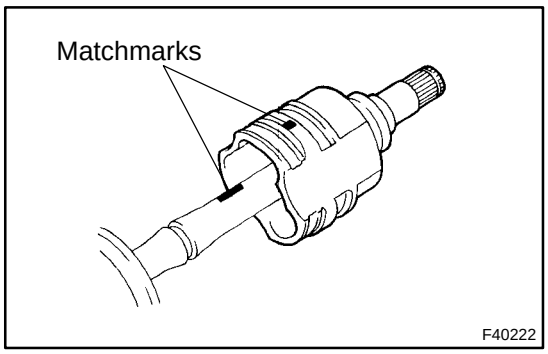

(g) Align the matchmarks, install the inboard joint sub–assy LH to the outboard joint shaft assy.

26. INSTALL INBOARD JOINT BOOT

(a) Install the inboard joint boot to the inboard joint assy and outboard joint shaft assy.

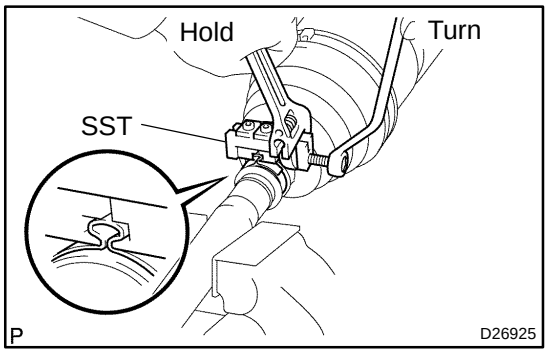

27. INSTALL FRONT AXLE INBOARD JOINT BOOT LH CLAMP

(a) Mount drive shaft in a soft vise.

(b) Secure the clamp onto the boot.

(c) Place SST onto the clamp.
SST 09521–24010

(d) Tighten the SST so that the clamp is pinched.

NOTICE:

Do not overtighten the SST.

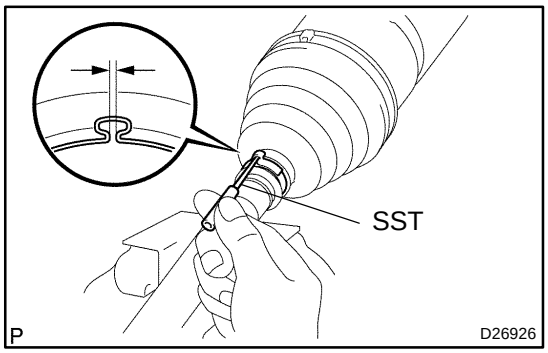

(e) Using SST, adjust the clearance of the clamp.
SST 09240–00020 (09242–00150)
Clearance: 1.5 mm (0.059 in.) or less.

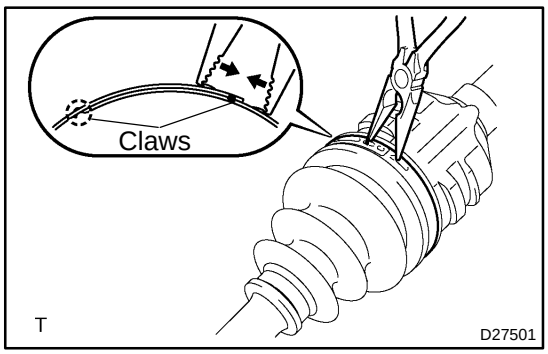

28. INSTALL FRONT AXLE INBOARD JOINT BOOT LH NO.2 CLAMP

(a) Using a needle nose pliers, install the inboard joint boot LH No.2 clamp as shown in the illustration.

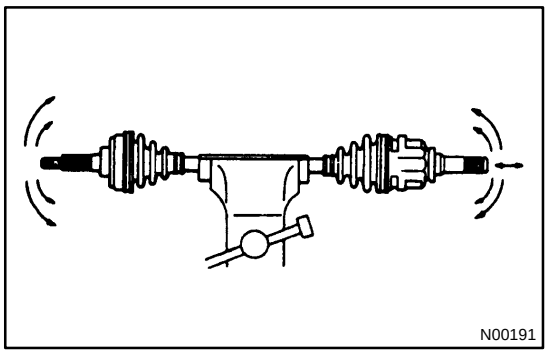

29. INSPECT FRONT DRIVE SHAFT ASSY LH

(a) Check that there is no remarkable play in the outboard joint.

(b) Check that the inboard joint slides smoothly in the thrust direction.

(c) Check that there is no remarkable play in the radial direction of the inboard joint.

(d) Check the boots for damage.

NOTICE:

Keep the drive shaft assy level during inspection.

HINT:

For dimension (A), refer to the following table.

RH	848.3 ± 5.0 mm (33.398 ± 0.197 in.)
LH	569.3 ± 5.0 mm (22.413 ± 0.197 in.)

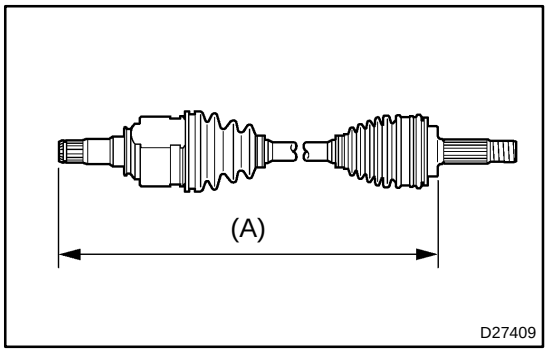

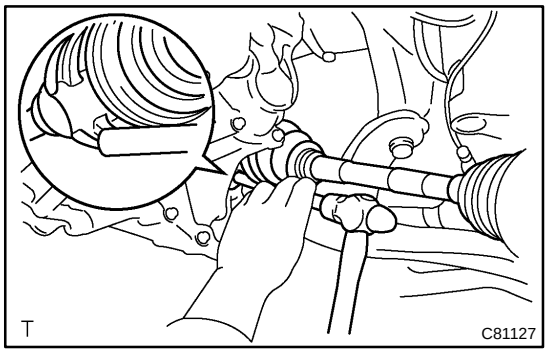

30. INSTALL FRONT DRIVE SHAFT ASSY LH

(a) A/T:

Coat the spline of the inboard joint shaft assy with ATF.

(b) M/T:

Coat the spline of the inboard joint shaft assy with gear oil.

(c) Align the shaft splines, install the drive shaft assy with a brass bar and a hammer.

NOTICE:

- **Set the hole snap ring with opening side facing downwards.**
- **Be careful not to damage the oil seal.**

HINT:

Whether the inboard joint shaft is in contact with the pinion shaft or not can be known from the sound or feeling when driving it in.

31. INSTALL FRONT DRIVE SHAFT ASSY RH

HINT:

Install the RH side by the same procedure as the LH side.

NOTICE:

Do not damage the oil seal.

32. INSTALL FRONT AXLE ASSY LH

(a) Install the drive shaft assy LH to the front axle assy LH.

NOTICE:

- **Be careful not to damage the outboard joint boot.**
- **w/ ABS:**
  Be careful not to damage the speed sensor rotor.

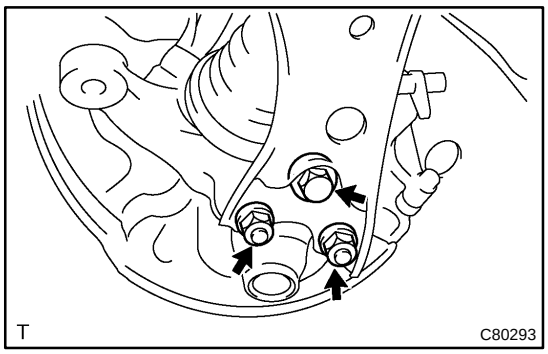

33. INSTALL FRONT SUSPENSION ARM SUB–ASSY LOWER NO.1 LH

(a) Install the lower ball joint to the front suspension arm sub–assy lower No.1 LH with a bolt and 2 nuts.
Torque: 89 N·m (908 kgf·cm, 66 ft·lbf)

34. INSTALL TIE ROD END SUB–ASSY LH

(a) Install the tie rod end sub–assy LH to the steering knuckle with the nut.
Torque: 49 N·m (500 kgf·cm, 36 ft·lbf)

(b) Install a new cotter pin.

NOTICE:

If the holes for the cotter pin are not aligned, tighten the nut further to 60°.

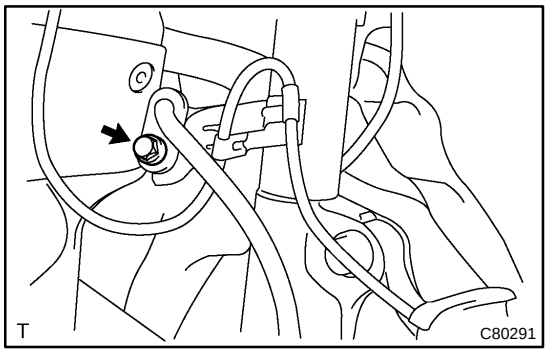

35. INSTALL SPEED SENSOR FRONT LH (W/ ABS)

(a) Install the speed sensor front LH and flexible hose to shock absorber assy front LH with the bolt.
Torque: 29 N·m (296 kgf·cm, 21 ft·lbf)

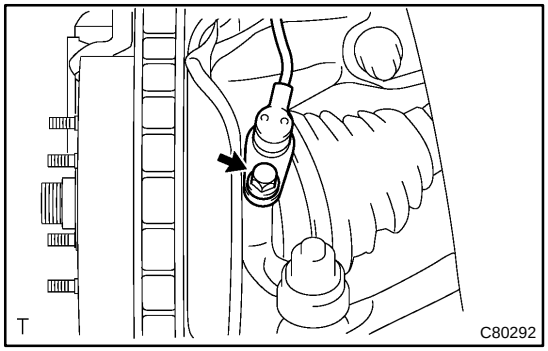

(b) Install the speed sensor front LH to the steering knuckle with the bolt.
Torque: 8.0 N·m (82 kgf·cm, 71 ft·lbf)

NOTICE:

- **Be careful not to damage the speed sensor.**
- **Keep the speed sensor clean.**
- **Do not twist the sensor wire when installing the sensor.**

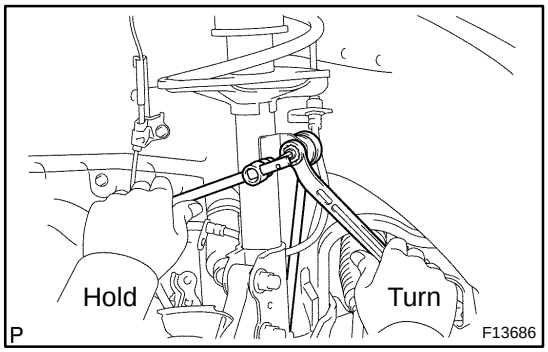

36. INSTALL FRONT STABILIZER LINK ASSY LH

(a) Install the front stabilizer link assy LH with the nut.
Torque: 74 N·m (755 kgf·cm, 55 ft·lbf)

HINT:

If the ball joint turns together with the nut, use a hexagon wrench (6 mm) to hold the stud.

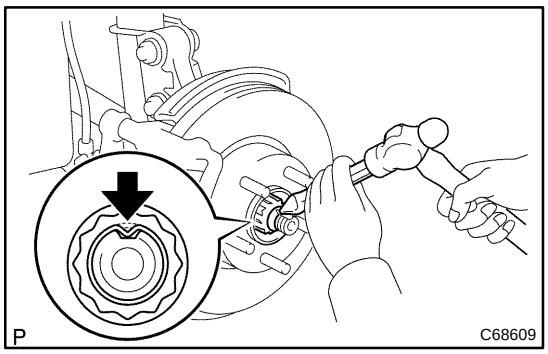

37. INSTALL FRONT AXLE HUB LH NUT

(a) Install a new hub LH nut.
Torque: 216 N·m (2,200 kgf·cm, 159 ft·lbf)

(b) Using a chisel and a hammer, stake the hub LH nut.

38. INSTALL FRONT WHEEL
Torque: 103 N·m (1,050 kgf·cm, 76 ft·lbf)

39. ADD MANUAL TRANSAXLE OIL (M/T TRANSAXLE)

40. INSPECT AND ADJUST MANUAL TRANSAXLE OIL (M/T TRANSAXLE) (See page 41–2)

41. ADD AUTOMATIC TRANSAXLE FLUID (A/T TRANSAXLE)

42. INSPECT AND ADJUST AUTOMATIC TRANSAXLE FLUID (A/T TRANSAXLE) (See page 40–2)

43. INSPECT AND ADJUST FRONT WHEEL ALIGNMENT (See page 26–5)

44. CHECK ABS SPEED SENSOR SIGNAL (W/ ABS) (See page 05–297)

300A0–02

ON–VEHICLE INSPECTION

1. INSPECT FRONT AXLE HUB BEARING

(a) Remove the front wheel.

(b) Separate the front disc brake caliper assy (See page 30–17).

(c) Remove the front disc.

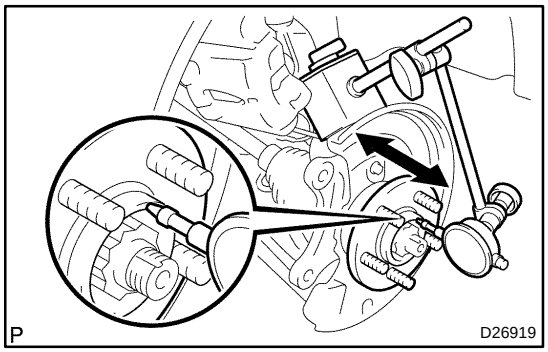

(d) Inspect the bearing backlash.

(1) Using a dial indicator, check the backlash near the center of the axle hub.

Maximum: 0.05 mm (0.0020 in.)

If the backlash exceeds the maximum, replace the front axle hub bearing.

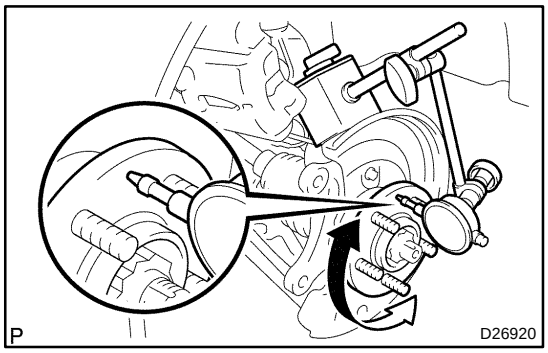

(e) Inspect the axle hub deviation.

(1) Using a dial indicator, check the deviation at the surface of the axle hub outside the hub bolt.

Maximum: 0.05 mm (0.0020 in.)

If the backlash exceeds the maximum, replace the front axle hub sub–assy.

(f) Install the front disc.

(g) Install the front disc brake caliper assy (See page 30–17).

(h) Install the front wheel.

Torque: 103 N·m (1,050 kgf·cm, 76 ft·lbf)

2. INSPECT REAR AXLE HUB BEARING

(a) Remove the rear wheel.

(b) Remove rear brake drum sub–assy.

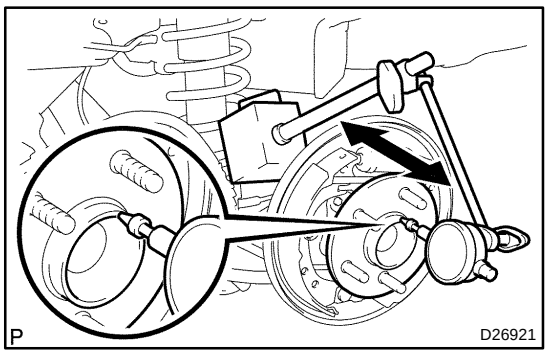

(c) Inspect the bearing backlash.

(1) Set a dial indicator near the center of the axle hub and check the backlash in the bearing shaft sirection.

Maximum: 0.05 mm (0.0020 in.)

If the backlash exceeds the maximum, replace the rear axle hub & bearing assy.

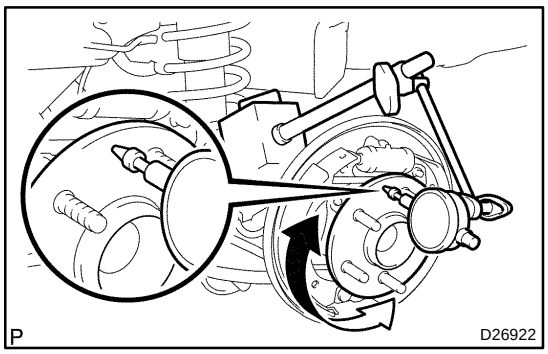

(d) Inspect the axle hub deviation.
  (1) Using a dial indicator, check the deviation at the surface of the axle hub outside the hub bolt.

Maximum: 0.07 mm (0.0028 in.)

If the backlash exceeds the maximum, replace the rear axle hub & bearing assy.

(e) Install the rear brake drum sub–assy.

(f) Install the rear wheel.

Torque: 103 N·m (1,050 kgf·cm, 76 ft·lbf)

REAR AXLE HUB & BEARING ASSY LH

300A6–02

COMPONENTS

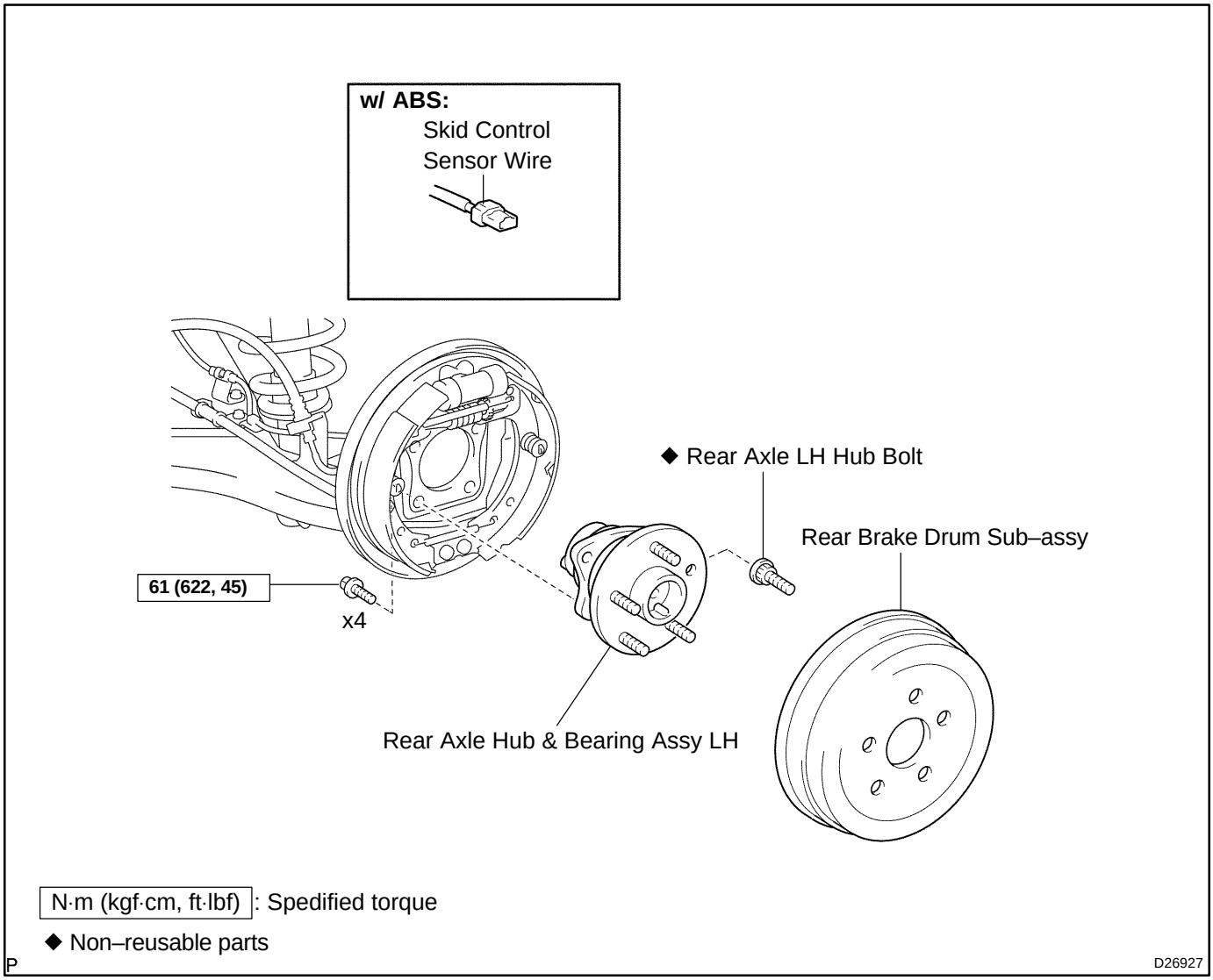

N·m (kgf·cm, ft·lbf) : Spedified torque

◆ Non–reusable parts

P

D26927

300A7–03

REPLACEMENT

HINT:

COMPONENTS: See page 30–23

1. REMOVE REAR WHEEL

2. REMOVE REAR BRAKE DRUM SUB–ASSY

3. DISCONNECT SKID CONTROL SENSOR WIRE (W/ ABS)

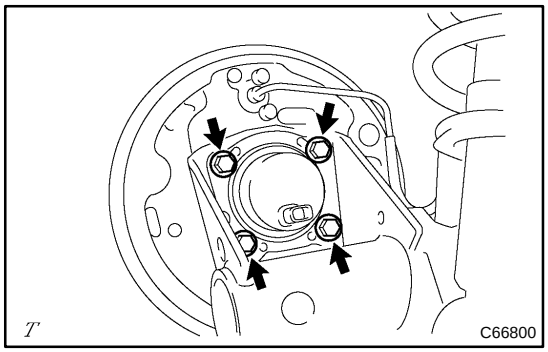

4. REMOVE REAR AXLE HUB & BEARING ASSY LH

(a) Remove the 4 bolts and hub & bearing assy LH.

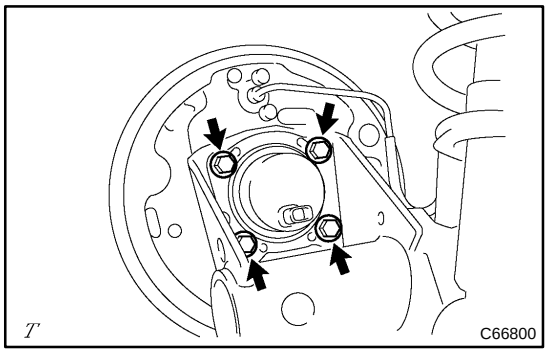

5. INSTALL REAR AXLE HUB & BEARING ASSY LH

(a) Install the hub & bearing assy LH with the 4 bolts.

Torque: 61 N·m (622 kgf·cm, 45 ft·lbf)

6. CONNECT SKID CONTROL SENSOR WIRE (W/ ABS)

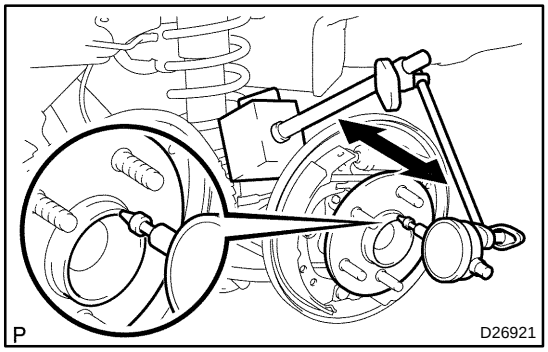

7. INSPECT BEARING BACKLASH

(a) Set a dial indicator near the center of the axle hub and check the backlash in the bearing shaft sirection.

Maximum: 0.05 mm (0.0020 in.)

If the backlash exceeds the maximum, replace the rear axle hub & bearing assy LH.

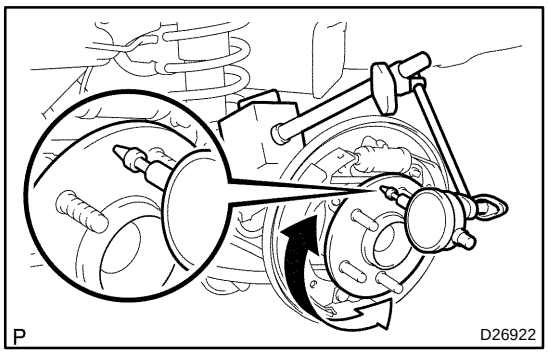

8. INSPECT AXLE HUB DEVIATION

(a) Using a dial indicator, check the deviation at the surface of the axle hub outside the hub bolt.

Maximum: 0.07 mm (0.0028 in.)

If the backlash exceeds the maximum, replace the rear axle hub & bearing assy LH.

9. INSTALL REAR BRAKE DRUM SUB–ASSY

10. INSTALL REAR WHEEL

Torque: 103 N·m (1,050 kgf·cm, 76 ft·lbf)

11. CHECK ABS SPEED SENSOR SIGNAL (W/ ABS) (See page 05–297)

REAR AXLE LH HUB BOLT

300A8–02

REPLACEMENT

HINT:

COMPONENTS: See page 30–23

1. REMOVE REAR WHEEL

2. REMOVE REAR BRAKE DRUM SUB–ASSY

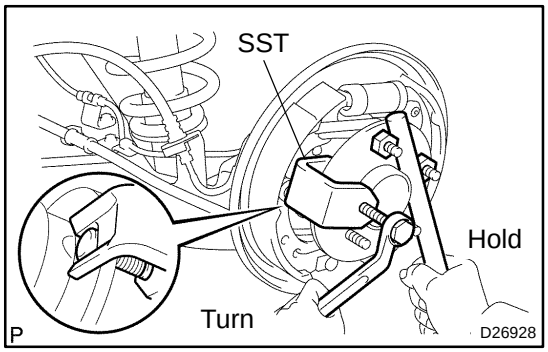

3. REMOVE REAR AXLE LH HUB BOLT

(a) Using SST and a hammer handle or an equivalent, remove the LH hub bolt.
SST 09628–10011

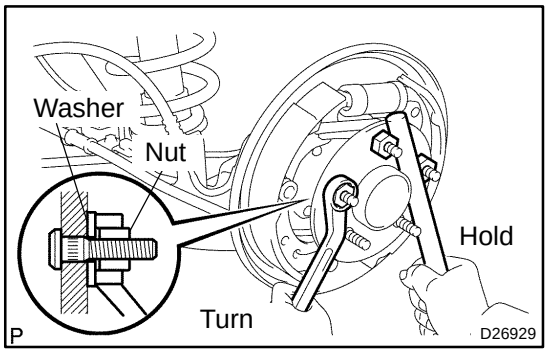

4. INSTALL REAR AXLE LH HUB BOLT

(a) Install a washer and nut to a new LH hub bolt as shown in the illustration.

(b) Using a hammer handle or an equivalent to hold the rear axle hub & bearing assy LH, install the LH hub bolt by tightening the nut.

5. INSTALL REAR BRAKE DRUM SUB–ASSY

6. INSTALL REAR WHEEL
Torque: 103 N·m (1,050 kgf·cm, 76 ft·lbf)

DRIVE SHAFT, PROPELLER SHAFT, AXLE

3009Z–03

PROBLEM SYMPTOMS TABLE

Use the table below to help you find the cause of the problem. The numbers indicate the priority of the likely cause of the problem. Check each part in order. If necessary, replace these parts.

Symptom	Suspect Area	See page
Wander	5. Wheel alignment	26–5 27–3
	6. Steering linkage (Loosen or worn)	51–18
	7. Hub bearing (Worn)	30–17 30–24
	8. Stabilizer bar	26–19
Front wheel shimmy	1. Wheel balance	
	2. Shock absorber	26–8
	3. Suspension arm lower (Worn)	26–13
	4. Coil spring	26–8
	5. Hub bearing (Worn)	30–17 30–24
Noise (Drive shaft)	1. Inbord joint (Worn)	30–6
	2. Outbord joint (Worn)	30–6

BRAKE ACTUATOR ASSY

320IO–01

ON–VEHICLE INSPECTION

1. CONNECT HAND–HELD TESTER:

(a) Connect the hand–held tester to the DLC3.

(b) Start the engine and run it at idle.

(c) Select the ACTIVE TEST mode on the hand–held tester.

HINT:

Please refer to the hand–held tester operator's manual for further details.

2. INSPECT ACTUATOR MOTOR OPERATION

(a) With the motor relay ON, check the actuator motor operation noise.

(b) Turn the motor relay to OFF.

(c) Depress the brake pedal and hold it for about 15 seconds. Check that the brake pedal cannot be depressed.

(d) With the motor relay ON, check that the pedal does not pulsate.

NOTICE:

Do not keep motor relay ON for more than 5 seconds continuously. When operating it continuously, set the interval more than 20 seconds.

(e) Turn the motor relay to OFF and release the brake pedal.

3. INSPECT RIGHT FRONT WHEEL OPERATION

NOTICE:

Never turn ON the solenoid which is not described below.

(a) With the brake pedal depressed, perform the following operations.

(b) Turn the SFRH and SFRR solenoid to ON simultaneously, and check that the pedal cannot be depressed.

NOTICE:

Do not keep solenoid ON for more than 10 seconds continuously. When operating it continuously, set the interval more than 20 seconds.

(c) Turn the SFRH and SFRR solenoid to OFF simultaneously, and check that the pedal can be depressed.

(d) Turn the motor relay to ON, and check that the pedal returns.

NOTICE:

Do not keep motor relay ON for more than 5 seconds continuously. When operating it continuously, set the interval more than 20 seconds.

(e) Turn the motor relay to OFF and release the brake pedal.

4. INSPECT OTHER WHEEL OPERATION

(a) As the same procedure, check the solenoids of other wheels.

HINT:

Left front wheel: SFLH, SFLR

Right rear wheel: SRRH, SRRR

Left rear wheel: SRLH, SRLR

320IP–04

REPLACEMENT

1. DRAIN BRAKE FLUID

NOTICE:

Wash the brake fluid off immediately if it comes into contact with any painted surface.

2. REMOVE FRONT WHEEL RH

3. REMOVE FRONT FENDER LINER RH

4. REMOVE BRAKE ACTUATOR WITH BRACKET

(a) Turn the latch of the actuator connector to disconnect the connector.

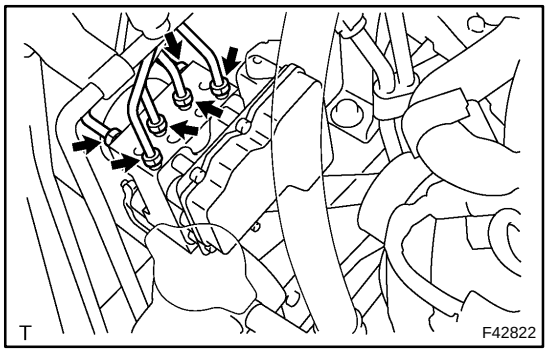

(b) Using SST, disconnect the 6 brake tubes from the brake actuator.
SST 09023–00100

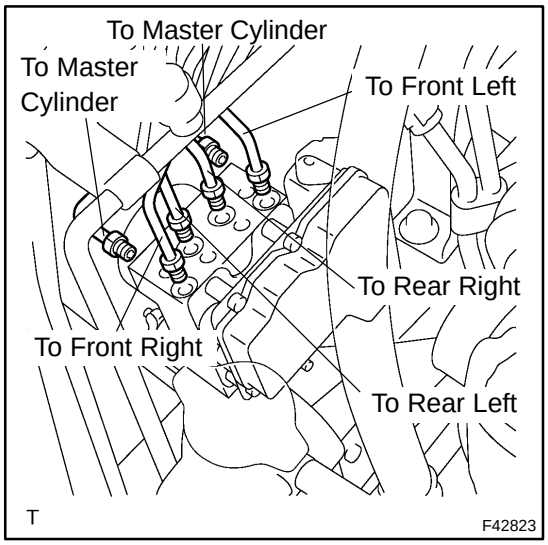

(c) Attach tags or make a memo to identify the place to reconnect.

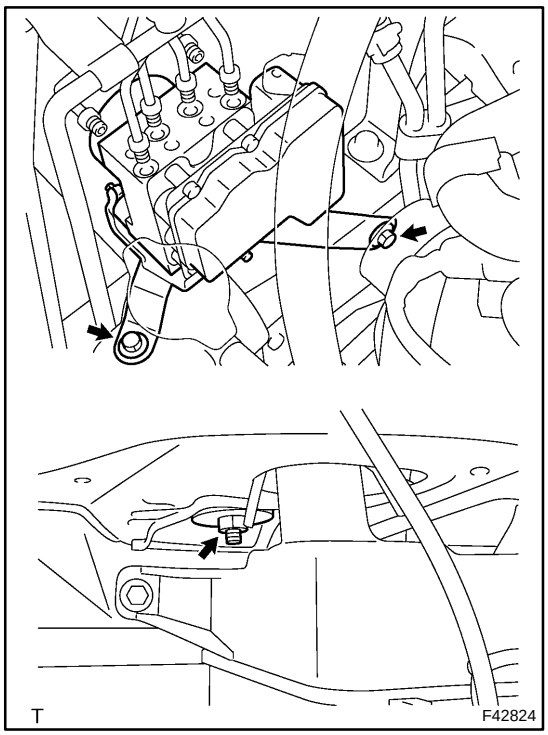

(d) Remove the nut, 2 bolts and brake actuator with bracket.

5. REMOVE BRAKE ACTUATOR ASSY

(a) Remove the 3 nuts and brake actuator from bracket.

6. INSTALL BRAKE ACTUATOR ASSY

(a) Install the brake actuator with the 3 nuts to the bracket.

Torque: 4.7 N·m (48 kgf·cm, 42 in.·lbf)

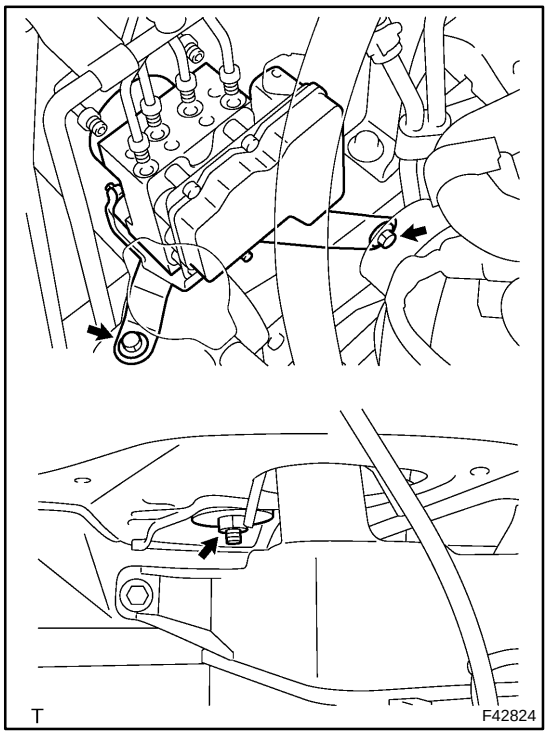

7. INSTALL BRAKE ACTUATOR WITH BRACKET

(a) Install the brake actuator with bracket with the nut and 2 bolts.

Torque: 19 N·m (194 kgf·cm, 14 ft·lbf)

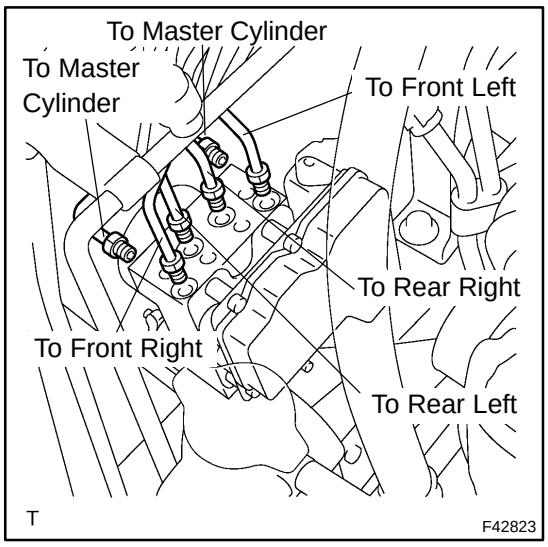

(b) Using SST, connect the 6 brake tubes to the correct position of brake actuator, as shown in the illustration.
SST 09023–00100
Torque: 15.2 N·m (155 kgf·cm, 11 ft·lbf)

(c) Connect the brake actuator connector.

8. INSTALL FRONT FENDER LINER RH
9. INSTALL FRONT WHEEL RH
Torque: 103 N·m (1,050 kgf·cm, 76 ft·lbf)
10. FILL RESERVOIR WITH BRAKE FLUID
11. BLEED MASTER CYLINDER (See page 32–4)
SST 09023–00100
12. BLEED BRAKE LINE (See page 32–4)
13. CHECK FLUID LEVEL IN RESERVOIR
14. CHECK BRAKE FLUID LEAKAGE
15. CHECK BRAKE ACTUATOR WITH HAND–HELD TESTER (See page 05–297)

320IG–01

COMPONENTS

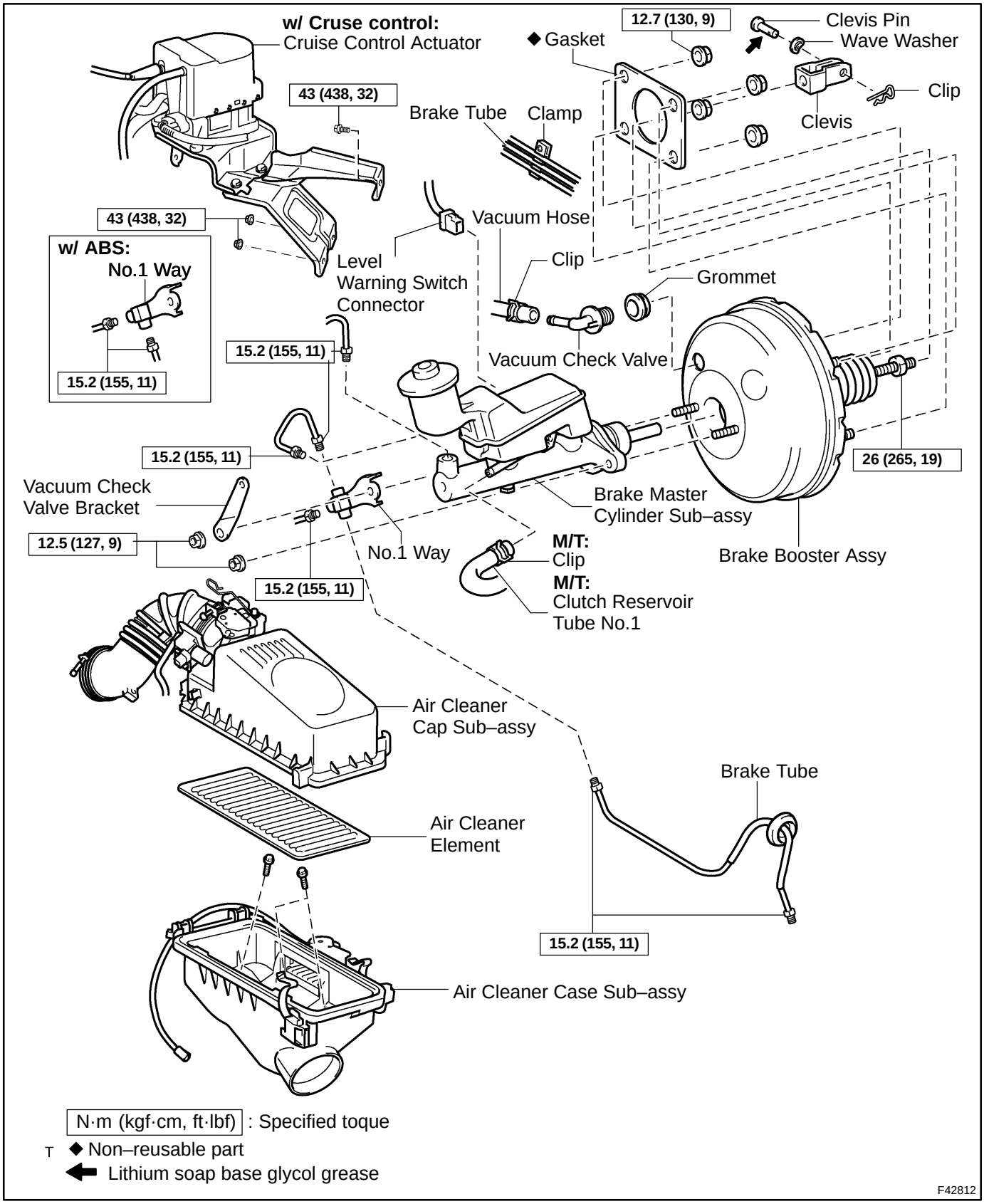

BRAKE BOOSTER ASSY

ON–VEHICLE INSPECTION

320IF–01

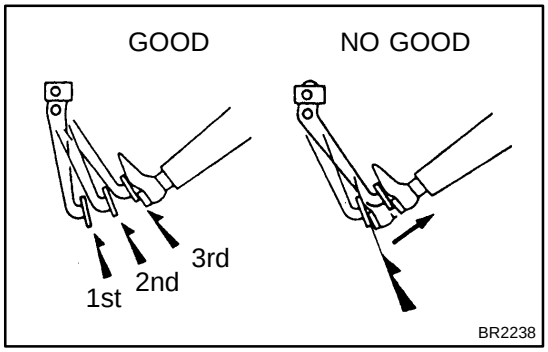

1. INSPECT BRAKE BOOSTER

(a) Airtightness check.

(1) Start the engine and stop it after 1 or 2 minutes. Depress the brake pedal several times slowly.

HINT:

If the pedal goes down farthest at the 1st time, but gradually rises after the 2nd or 3rd time, the booster is airtight.

(2) Depress the brake pedal while the engine is running, and stop the engine with the pedal depressed.

HINT:

If there is no change in the pedal reserve distance after holding the pedal for 30 seconds, the booster is airtight.

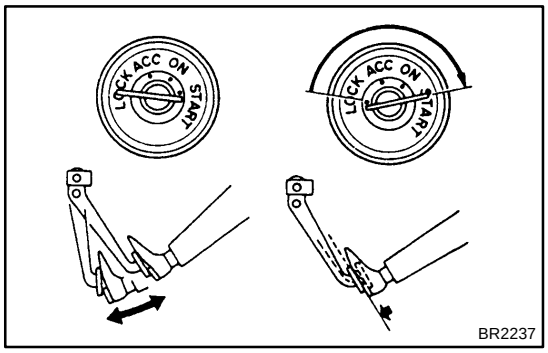

(b) Operating check.

(1) Depress the brake pedal several times with the ignition switch OFF and check that there is no change in the pedal reserve distance.

(2) Depress the brake pedal and start the engine.

HINT:

If the pedal goes down slightly, operation is normal.

2. INSPECT VACUUM CHECK VALVE

(a) Check vacuum check valve.

(1) Slide the clip and disconnect the vacuum hose.

(2) Remove the vacuum check valve.

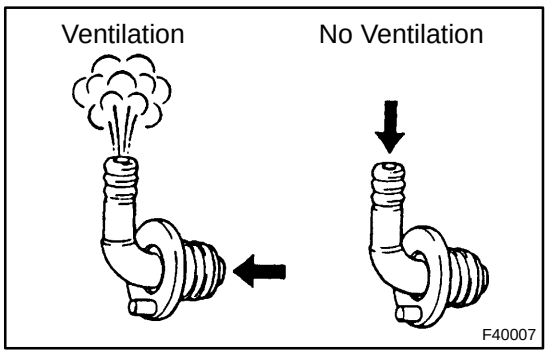

(3) Check that there is ventilation from the booster to engine, and no ventilation from the engine to the booster.

(4) If any fault is found, replace the vacuum check valve.

320IH–02

REPLACEMENT

1. DRAIN BRAKE FLUID

NOTICE:

Wash the brake fluid off immediately if it comes into contact with any painted surface.

2. REMOVE AIR CLEANER CAP SUB–ASSY

3. REMOVE AIR CLEANER CASE SUB–ASSY

(a) Remove the air cleaner element, then remove the 3 bolts and air cleaner case sub–assy.

4. REMOVE BRAKE MASTER CYLINDER SUB–ASSY (See page 32–13)

5. DISCONNECT BRAKE MASTER CYLINDER PUSH ROD CLEVIS

(a) Loosen the push rod clevis lock nut.

(b) Remove the clip, clevis pin and wave washer.

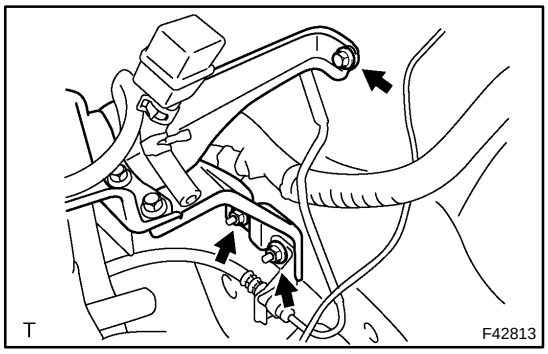

6. REMOVE CRUISE CONTROL ACTUATOR ASSY (W/ CRUISE CONTROL)

(a) Remove the 2 nuts and bolt from the cruise control actuator and bracket, and move cruise control actuator aside.

7. REMOVE FRONT WHEEL LH

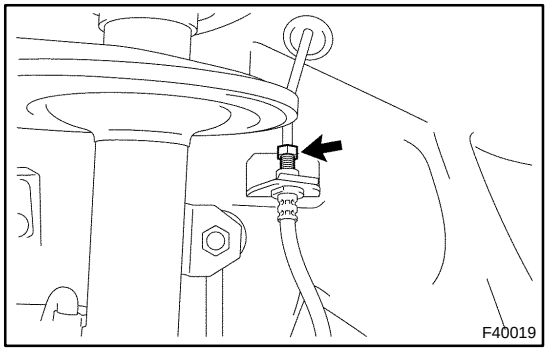

8. REMOVE BRAKE BOOSTER ASSY

(a) Using SST and spanner, disconnect the brake tube from the flexible hose, and remove the brake tube from the body.

SST 09023–00100

(b) Slide the clip, disconnect the vacuum hose from the brake booster assy.

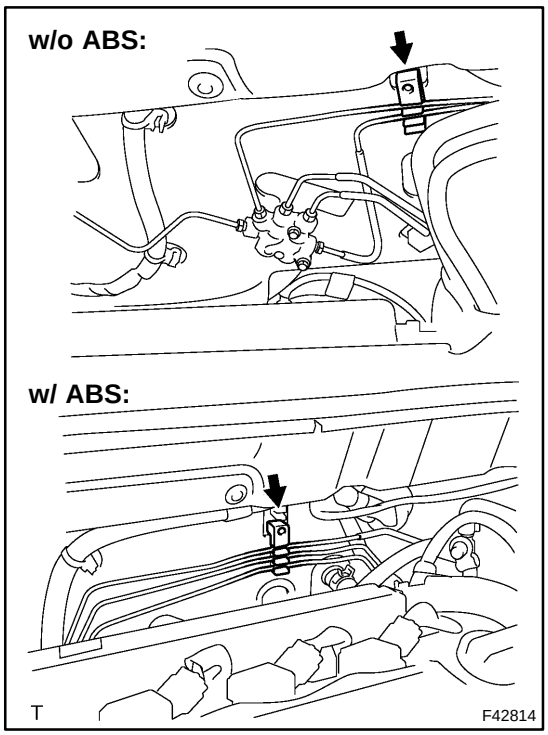

(c) Disconnect the 2 or 3 brake tubes from the clamp, and move brake tubes aside.

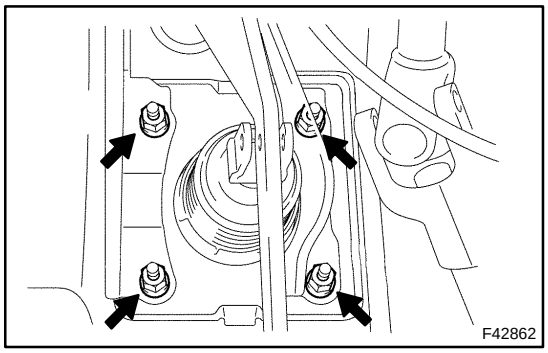

(d) Remove the 4 nuts and clevis.
(e) Pull out the brake booster and gasket.

9. INSTALL BRAKE BOOSTER ASSY

(a) Install the clevis to the booster push rod.

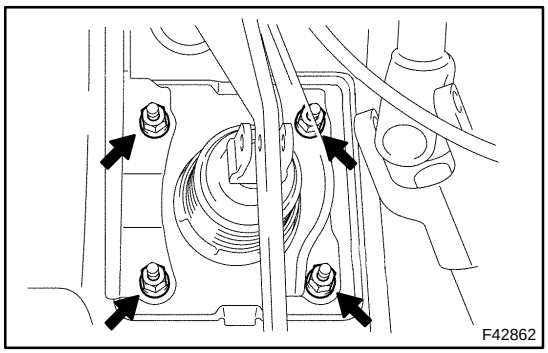

(b) Install a new gasket and brake booster with the 4 nuts.
Torque: 12.7 N·m (130 kgf·cm, 9 ft·lbf)

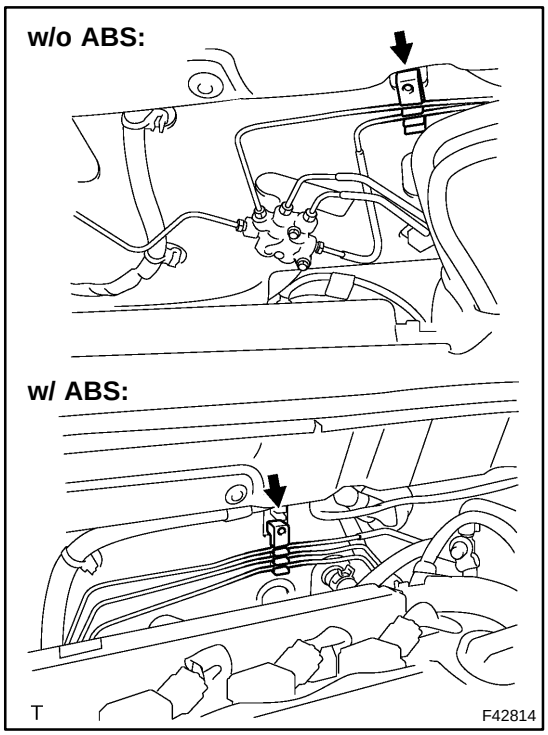

(c) Connect the 2 or 3 brake tubes to the clamp.
(d) Connect the vacuum hose to the brake booster.

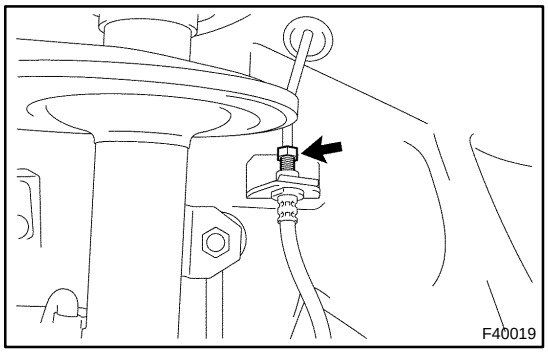

(e) Using SST and spanner, connect the brake tube to the flexible hose.
SST 09023–00100
Torque: 15.2 N·m (155 kgf·cm, 11 ft·lbf)

10. INSTALL FRONT WHEEL LH
Torque: 103 N·m (1,050 kgf·cm, 76 ft·lbf)

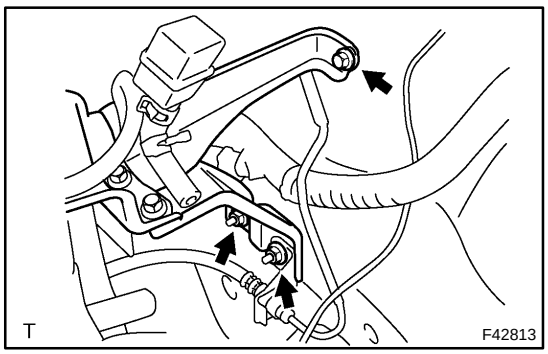

11. INSTALL CRUISE CONTROL ACTUATOR ASSY (W/ CRUISE CONTROL)
(a) Install the cruise control actuator and bracket with 2 nuts and bolt.
Torque: 43 N·m (438 kgf·cm, 32 ft·lbf)

12. CONNECT BRAKE MASTER CYLINDER PUSH ROD CLEVIS
(a) Apply the lithium soap base glycol grease to the push rod clevis pin.
(b) Connect the brake master cylinder push rod clevis with the push rod clevis pin, wave washer and clip.
13. INSTALL BRAKE MASTER CYLINDER SUB–ASSY (See page 32–13)

14. INSTALL AIR CLEANER CASE SUB–ASSY

(a) Install the air cleaner case with 3 bolts, then install the air cleaner element to the air cleaner case sub–assy.

15. INSTALL AIR CLEANER CAP SUB–ASSY

16. FILL RESERVOIR WITH BRAKE FLUID

17. BLEED MASTER CYLINDER (See page 32–4)

SST 09023–00100

18. BLEED BRAKE LINE (See page 32–4)

19. CHECK AND ADJUST BRAKE PEDAL HEIGHT (See page 32–6)

20. CHECK PEDAL FREE PLAY (See page 32–6)

21. CHECK PEDAL RESERVE DISTANCE (See page 32–6)

22. CHECK FLUID LEVEL IN RESERVOIR

23. CHECK BRAKE FLUID LEAKAGE

BRAKE MASTER CYLINDER SUB–ASSY (April, 2003)

320ZN–01

COMPONENTS

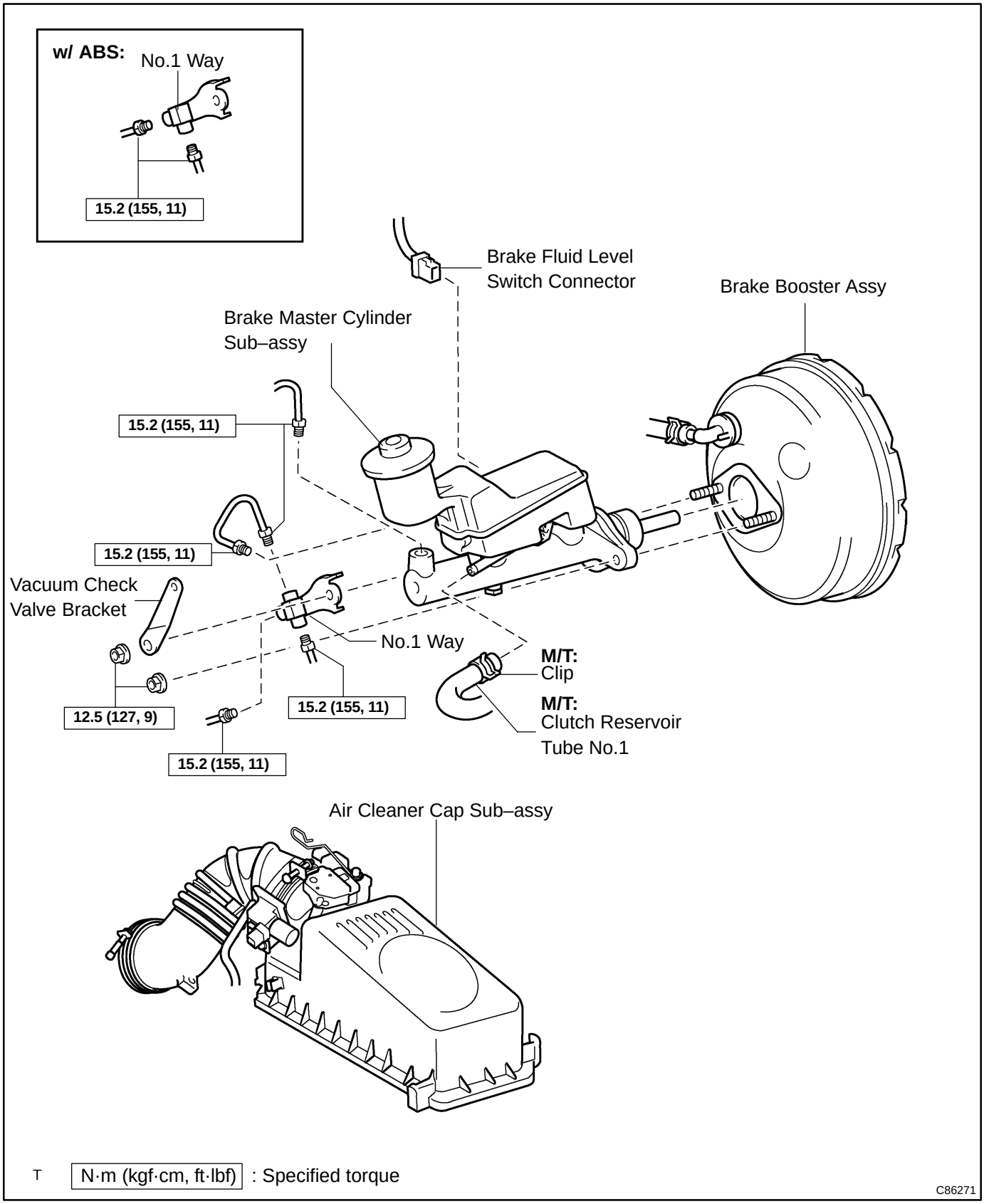

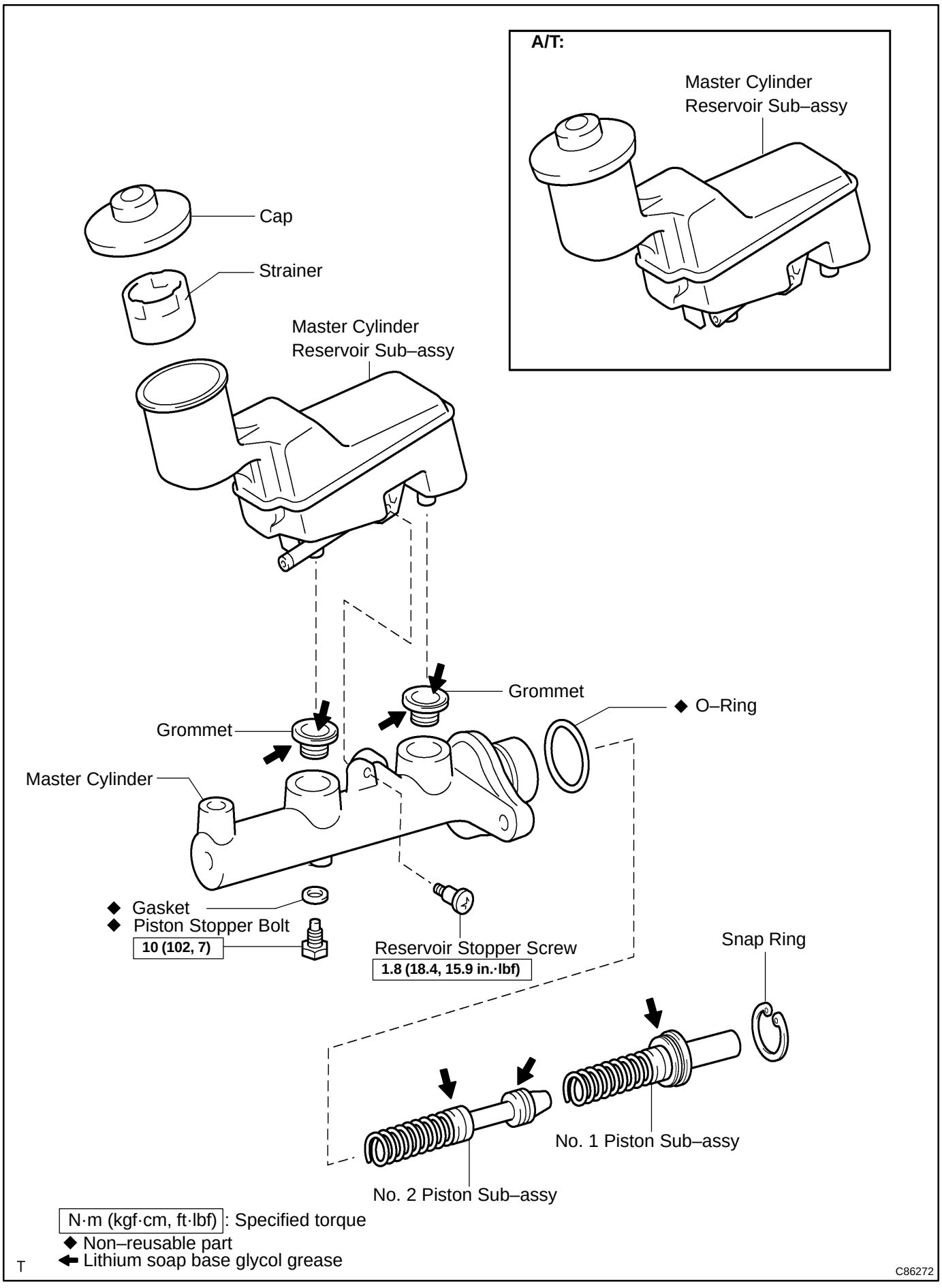
A/T:
Master Cylinder Reservoir Sub–assy
Cap
Strainer
Master Cylinder Reservoir Sub–assy
Grommet
◆ O–Ring
Grommet
Master Cylinder
◆ Gasket
◆ Piston Stopper Bolt
10 (102, 7)
Reservoir Stopper Screw
1.8 (18.4, 15.9 in.·lbf)
Snap Ring
No. 1 Piston Sub–assy
No. 2 Piston Sub–assy
N·m (kgf·cm, ft·lbf): Specified torque
◆ Non–reusable part
Lithium soap base glycol grease
T
C86272

320IE–02

OVERHAUL

1. DRAIN BRAKE FLUID

NOTICE:

Wash the brake fluid off immediately if it comes into contact with any painted surface.

2. REMOVE AIR CLEANER CAP SUB–ASSY

3. REMOVE BRAKE MASTER CYLINDER SUB–ASSY

(a) Disconnect the brake fluid level switch connector from master cylinder reservoir sub–assy.

(b) M/T:
Slide the clip and disconnect the clutch reservoir tube No.1 from master cylinder reservoir sub–assy.

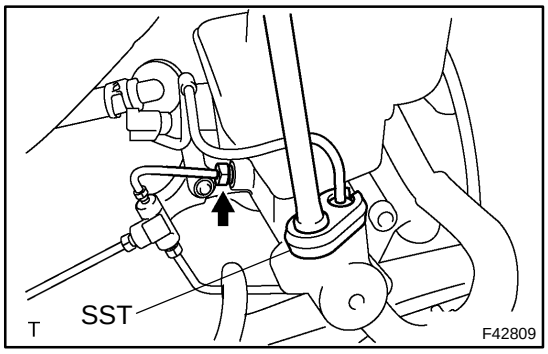

(c) Using SST, disconnect the 2 brake tubes from the master cylinder.
SST 09023–00100

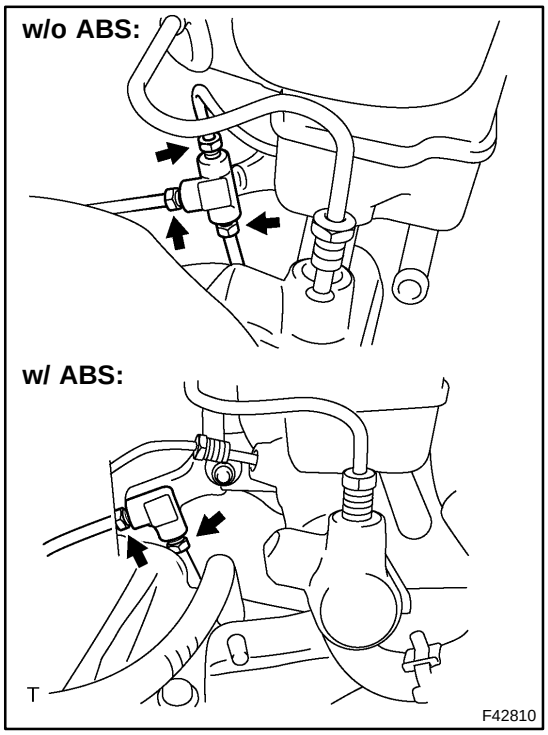

(d) Using SST, disconnect the 2 or 3 brake tubes from the No.1 way.
SST 09023–00100

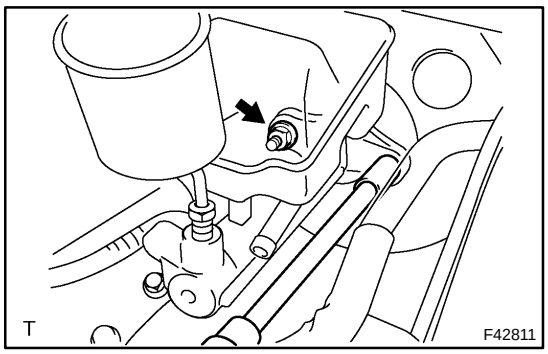

(e) Remove the 2 nuts, and pull out the master cylinder, No.1 way and vacuum check valve bracket.

4. REMOVE BRAKE MASTER CYLINDER RESERVOIR SUB–ASSY

(a) Remove the reservoir stopper screw and master cylinder reservoir sub–assy.

(b) Remove the 2 cylinder reservoir grommets.

5. REMOVE BRAKE MASTER CYLINDER KIT

(a) Hold the master cylinder in the vise with the 2 aluminum plates in between.

(b) Remove the O–ring.

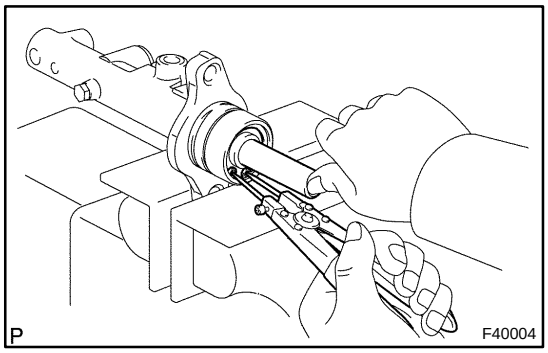

(c) Push in the piston and remove the snap ring with snap ring pliers.

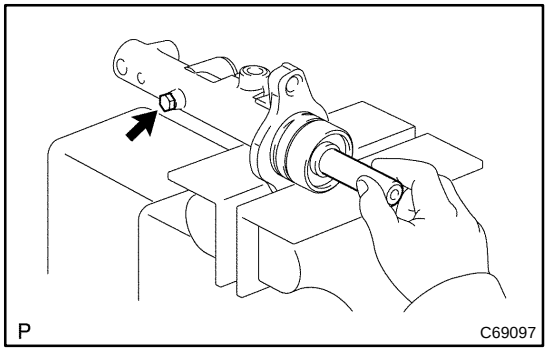

(d) Push in the piston and remove the piston stopper bolt and gasket.

(e) Remove the No.1 piston sub–assy by hand, pulling straight out not at an angle.

NOTICE:

If being pulled out at an angle, the piston may damage the cylinder bore.

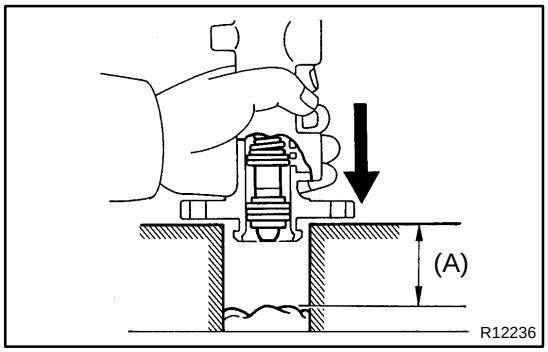

(f) Place a cloth and 2 wooden blocks on the work table and lightly edges until the No.2 piston sub–assy drops out of the cylinder.

NOTICE:

If being pulled out at an angle, the piston may damage the cylinder bore.

HINT:

Make sure that the distance (A) from the cloth to the top of the blocks is at least 100 mm (3.94 in.).

6. INSPECT BRAKE MASTER CYLINDER

(a) Check the cylinder bore for rust or scoring.

7. INSTALL BRAKE MASTER CYLINDER KIT

(a) Hold the master cylinder in the vise with the 2 aluminum plates in between.

(b) Apply the lithium soap base glycol grease to the No.1 and No.2 piston sub–assy.

(c) Install the No.2 and No.1 piston sub–assy to the master cylinder.

NOTICE:

- **If being inserted at an angle, the piston may damage the cylinder bore.**
- **Be careful not to damage the rubber lips on the pistons.**

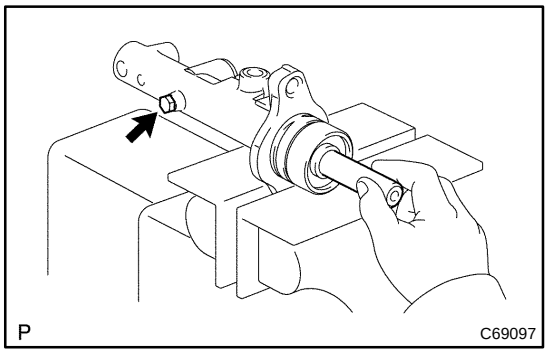

(d) Push in the piston and install a new gasket and a new piston stopper bolt.
Torque: 10 N·m (102 kgf·cm, 7 ft·lbf)

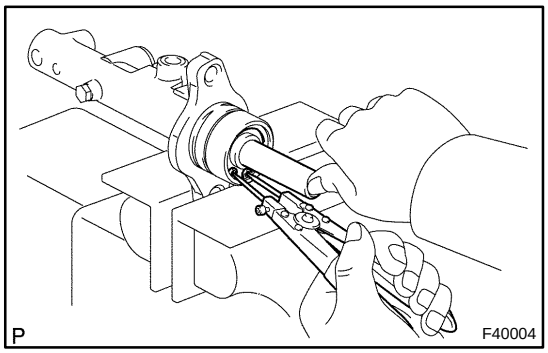

(e) Push in the piston and install the snap ring with snap ring pliers.

(f) Apply the lithium soap base glycol grease to a new O–ring, and install the O–ring to the master cylinder.

8. INSTALL BRAKE MASTER CYLINDER RESERVOIR SUB–ASSY

(a) Apply the lithium soap base glycol grease to 2 brake master cylinder reservoir grommets.

(b) Install the master cylinder reservoir with the screw.
Torque: 1.8 N·m (18.4 kgf·cm, 15.9 in.·lbf)

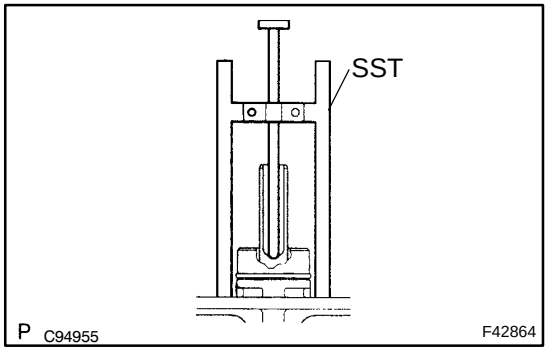

9. INSPECT AND ADJUST BRAKE BOOSTER PUSH ROD

(a) Apply the chalk to the flat surfaced tip of the SST pin.

(b) Set SST on the master cylinder and lower the pin of the SST until it slightly touches the piston.
SST 09737–00013

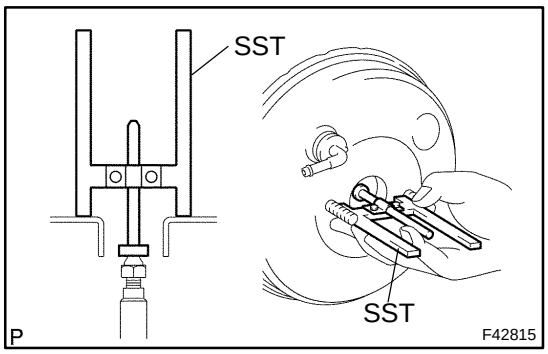

(c) Turn SST upside down and place it on the brake booster.
SST 09737–00013
Clearance: 0 mm (0 in.)

HINT:

- If there is a space between the SST main body and the booster shell (chalk is applied to the booster push rod), it means that the clearance is too small.
- If chalk is not applied to the booster push rod after placing the SST on the brake booster, it means that the clearance is too large.

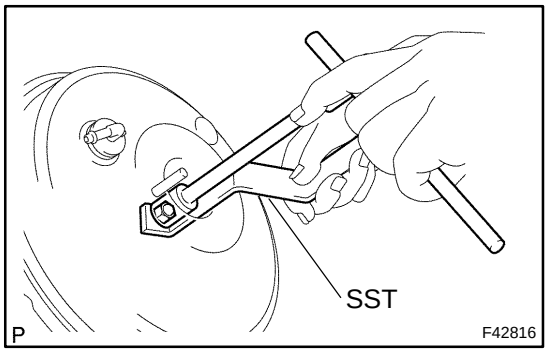

(d) If clearance is outside of the specified range, fix the push rod using SST and adjust the length of the protruding adjusting bolt.
SST 09737–00020

HINT:

When adjusting the push rod, depress the brake pedal sufficiently so that the push rod sticks out.

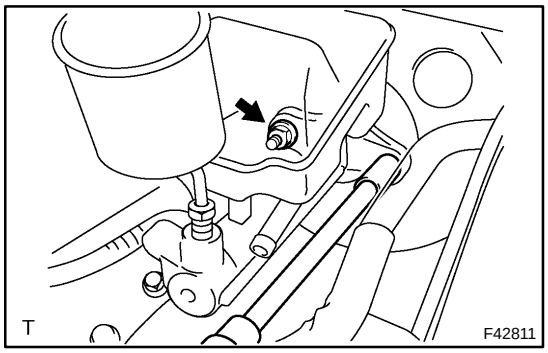

10. INSTALL BRAKE MASTER CYLINDER SUB–ASSY

(a) Install the master cylinder, No.1 way and vacuum check valve bracket with the 2 nuts.
Torque: 12.5 N·m (127 kgf·cm, 9 ft·lbf)

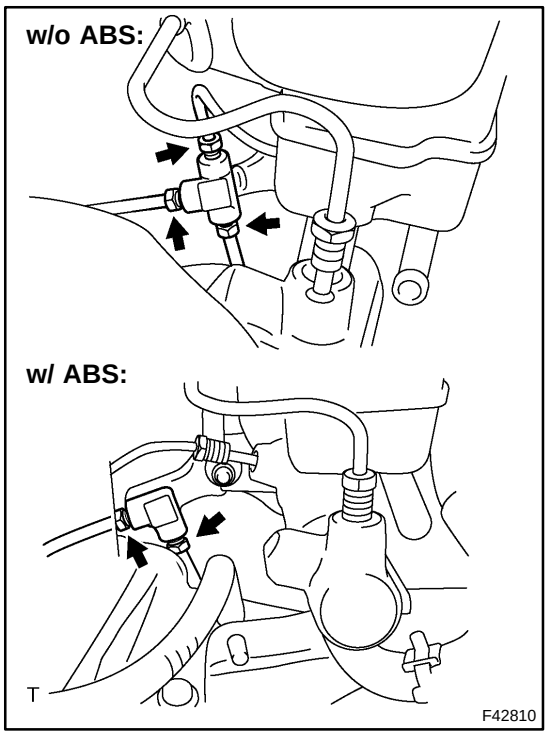

(b) Using SST, connect the 2 or 3 brake tubes to the No.1 way.
SST 09023–00100
Torque: 15.2 N·m (155 kgf·cm, 11 ft·lbf)

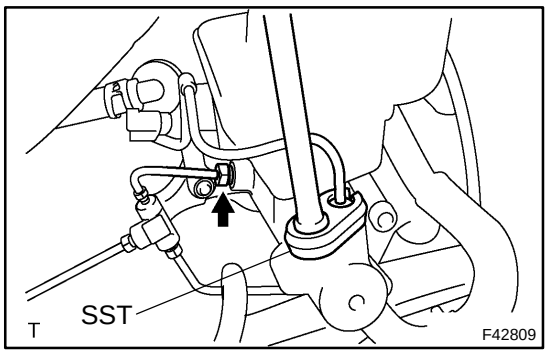

(c) Using SST, connect the 2 brake tubes to the master cylinder.
SST 09023–00100
Torque: 15.2 N·m (155 kgf·cm, 11 ft·lbf)

(d) M/T:
Connect the clutch reservoir tube No.1 with the clip to master cylinder reservoir sub–assy.

(e) Connect the brake fluid level switch connector to master cylinder reservoir sub–assy.

11. INSTALL AIR CLEANER CAP SUB–ASSY
12. FILL RESERVOIR WITH BRAKE FLUID
13. BLEED MASTER CYLINDER (See page 32–4)
SST 09023–00100
14. BLEED BRAKE LINE (See page 32–4)
15. CHECK FLUID LEVEL IN RESERVOIR
16. CHECK BRAKE FLUID LEAKAGE

BRAKE PEDAL SUB–ASSY

320IA–01

ADJUSTMENT

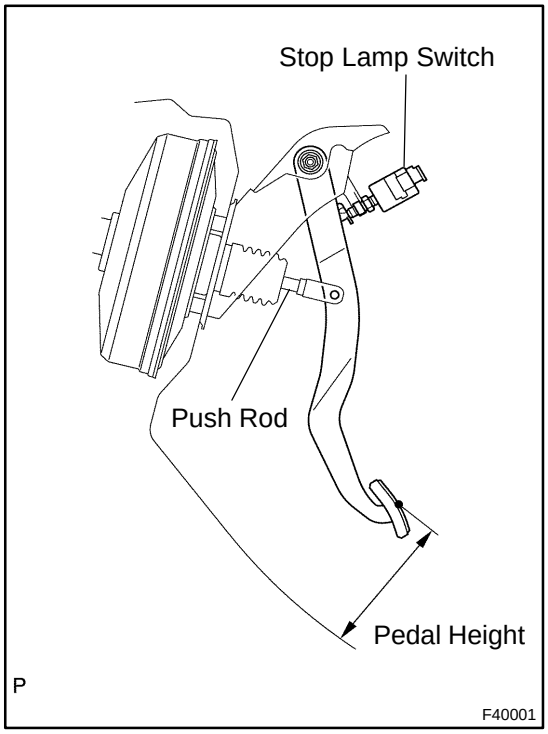

1. CHECK AND ADJUST BRAKE PEDAL HEIGHT

(a) Inspect brake pedal height.

Pedal height from asphalt sheet:

M/T: 134.9 – 144.9 mm (5.311 – 5.703 in.)

A/T: 136.0 – 146.0 mm (5.353 – 5.747 in.)

(1) Disconnect the connector from the stop lamp switch.

(2) Remove the stop lamp switch.

(3) Loosen the clevis lock nut.

(4) Adjust the pedal height by turning the pedal push rod.

(5) Tighten the push rod lock nut.

Torque: 26 N·m (265 kgf·cm, 19 ft·lbf)

(6) Install the stop lamp switch.

(7) Connect the connector to the stop lamp switch.

(8) Push the brake pedal in 5 – 15 mm (0.20 – 0.59 in.), and turn the stop lamp switch to lock the nut in the position where the stop lamp goes off.

(9) After installation, push the brake pedal in 5 – 15 mm (0.20 – 0.59 in.), check that stop lamp comes on.

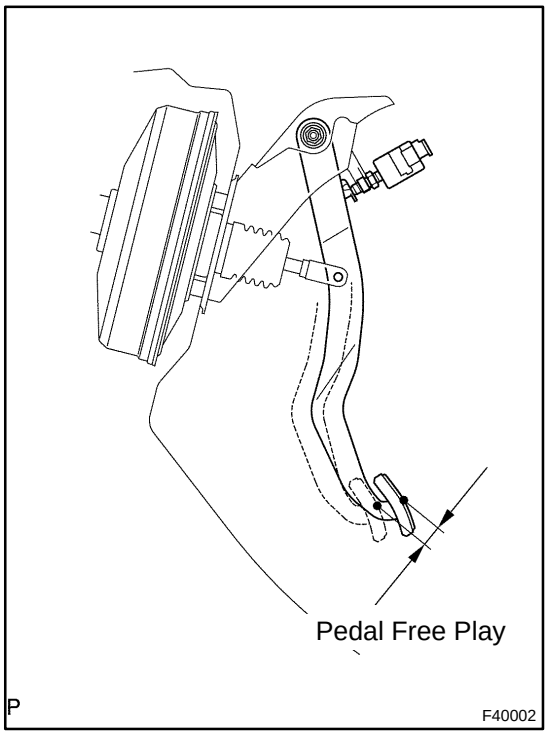

2. CHECK PEDAL FREE PLAY

(a) Stop the engine and depress the brake pedal several times until there is no more vacuum left in the booster.

(b) Push in the pedal until the beginning of the resistance is felt. Measure the distance, as shown in the installation.

Pedal free play: 1 – 6 mm (0.04 – 0.24 in.)

If incorrect, check the stop lamp switch clearance.

If the clearance is OK, then troubleshoot the brake system.

Stop lamp switch clearance:

0.5 – 2.4 mm (0.020 – 0.094 in.)

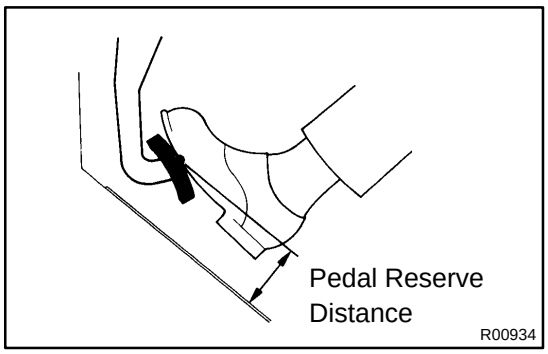

3. CHECK PEDAL RESERVE DISTANCE

(a) Release the parking brake lever.
With engine running, depress the pedal and measure the pedal reserve distance, as shown in the installation.
Pedal reserve distance from asphalt sheet at 490 N (50 kgf, 110.2 lbf): More than 70 mm (2.76 in.)

If incorrect, troubleshoot the brake system.

320IB–01

COMPONENTS

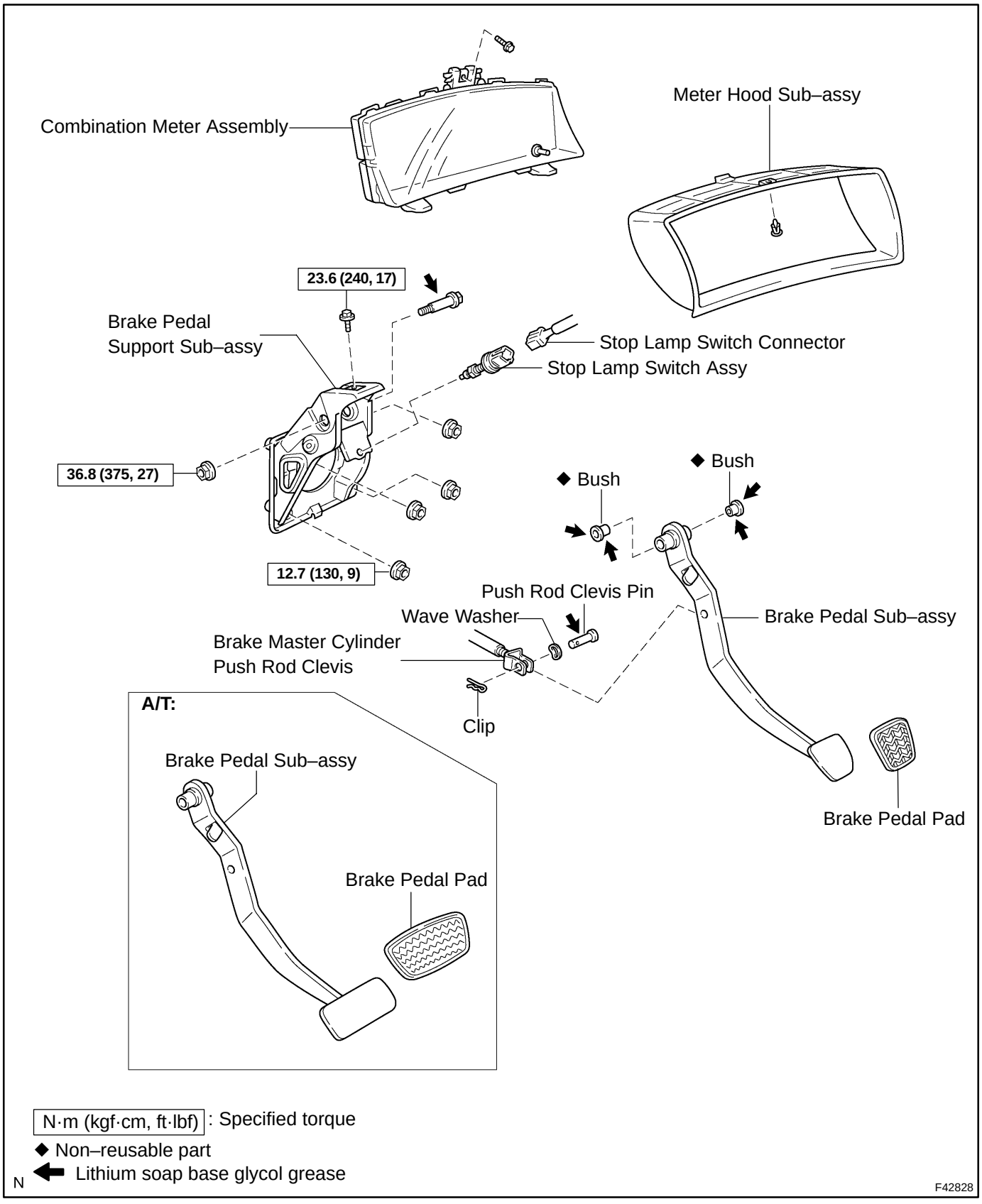

320IC–01

REPLACEMENT

1. REMOVE COMBINATION METER ASSEMBLY (See page 71–17)

2. DISCONNECT BRAKE MASTER CYLINDER PUSH ROD CLEVIS

(a) Remove the clip and push rod clevis pin and wave washer, and disconnect the push rod clevis from the brake pedal.

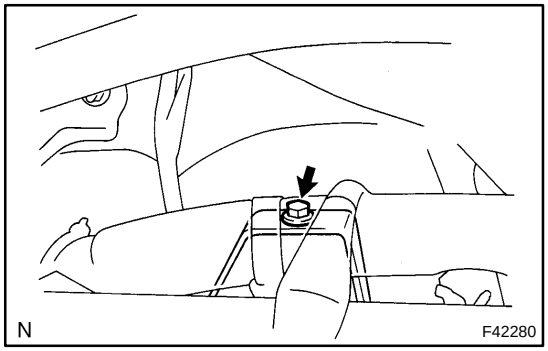

3. REMOVE BRAKE PEDAL SUPPORT SUB–ASSY

(a) Remove the bolt from the brake pedal support.

(b) Disconnect the stop lamp switch connector.

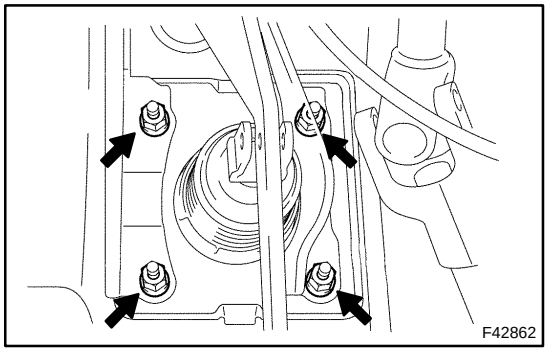

(c) Remove the 4 nuts and brake pedal support assy.

4. REMOVE BRAKE PEDAL SUB–ASSY

(a) Remove the bolt and nut from the brake pedal support sub–assy.

(b) Remove the brake pedal sub–assy and 2 bushes.

5. REMOVE STOP LAMP SWITCH ASSY

(a) Loosen the stop lamp switch lock nut.

(b) Remove the stop lamp switch assy from the brake pedal support sub–assy.

6. REMOVE BRAKE PEDAL PAD

(a) Remove the brake pedal pad from the brake pedal sub–assy.

7. INSTALL BRAKE PEDAL PAD

(a) Install the brake pedal pad to the brake pedal sub–assy.

8. INSTALL STOP LAMP SWITCH ASSY

(a) Install the stop lamp switch assy to the brake pedal sub–assy.

9. INSTALL BRAKE PEDAL SUB–ASSY

(a) Apply the lithium soap base glycol grease to the 2 new bushes on the ends and sides.

(b) Install the brake pedal sub–assy and 2 bushes to the brake pedal support with the bolt and nut.
Torque: 36.8 N·m (375 kgf·cm, 27 ft·lbf)

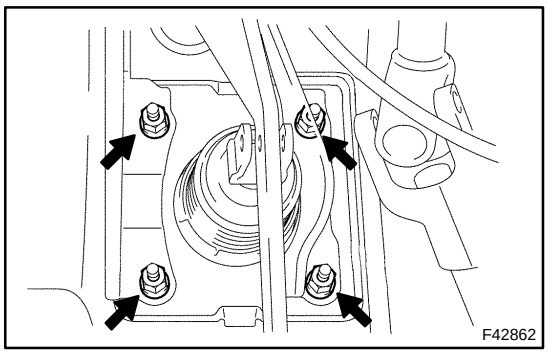

10. INSTALL BRAKE PEDAL SUPPORT SUB–ASSY

(a) Install the brake pedal support assy with the 4 nuts.
Torque: 12.7 N·m (130 kgf·cm, 9 ft·lbf)

(b) Connect the stop lamp switch connector to the stop lamp switch assy.

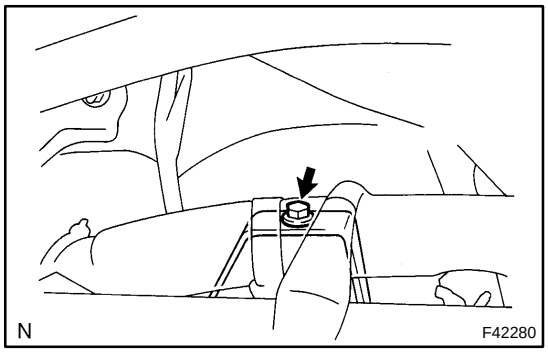

(c) Install the bolt to the brake pedal support sub–assy.
Torque: 23.6 N·m (240 kgf·cm, 17 ft·lbf)

11. CONNECT BRAKE MASTER CYLINDER PUSH ROD CLEVIS

(a) Apply the lithium soap base glycol grease to the push rod clevis pin.

(b) Connect the brake master cylinder push rod clevis with the push rod clevis pin, wave washer and clip.

12. INSTALL COMBINATION METER ASSEMBLY

13. CHECK AND ADJUST BRAKE PEDAL HEIGHT (See page 32–6)

14. CHECK PEDAL FREE PLAY (See page 32–6)

15. CHECK PEDAL RESERVE DISTANCE (See page 32–6)

BRAKE FLUID

320I9–01

BLEEDING

NOTICE:

Wash the brake fluid off immediately if it comes into contact with any painted surface.

HINT:

If any work is done on the brake system or if air in the brake lines is suspected, bleed the air from the system.

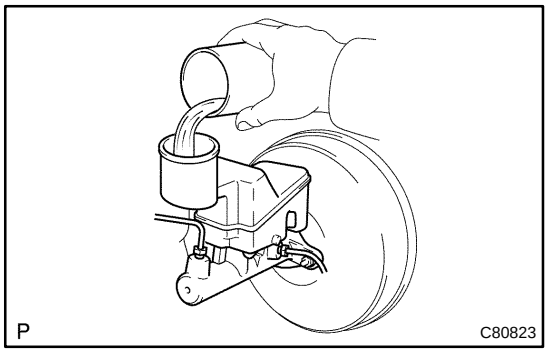

1. FILL RESERVOIR WITH BRAKE FLUID
Fluid: SAE J1703 or FMVSS No. 116 DOT3

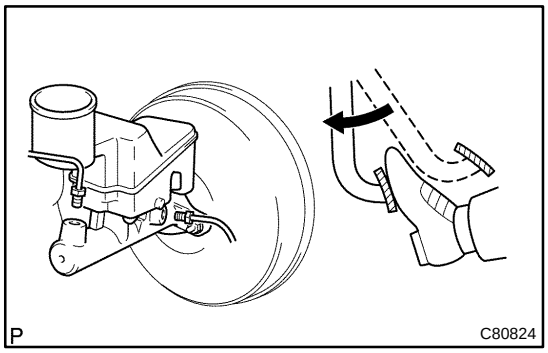

2. BLEED MASTER CYLINDER

HINT:

If the master cylinder has been disassembled or if the reservoir becomes empty, bleed the air from the master cylinder.

(a) Disconnect the brake lines from the master cylinder.
SST 09023–00100

(b) Slowly depress the brake pedal and hold it.

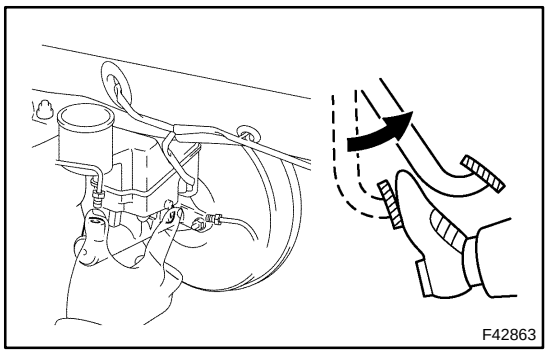

(c) Block off the outer holes with your fingers, and release the brake pedal.

(d) Repeat (b) and (c) 3 or 4 times.

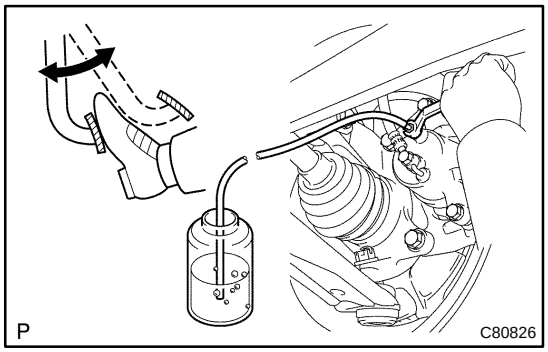

3. BLEED BRAKE LINE

(a) Connect the vinyl tube to the brake caliper.

(b) Depress the brake pedal several times, then loosen the bleeder plug with the pedal held down.

(c) At the point when fluid stops coming out, tighten the bleeder plug, then release the brake pedal.
Torque: 8.3 N·m (85 kgf·cm, 74 in.·lbf)

(d) Repeat (b) and (c) until all the air in the fluid has been bled out.

(e) Repeat the above procedures to bleed the air out of the brake line for each wheel.

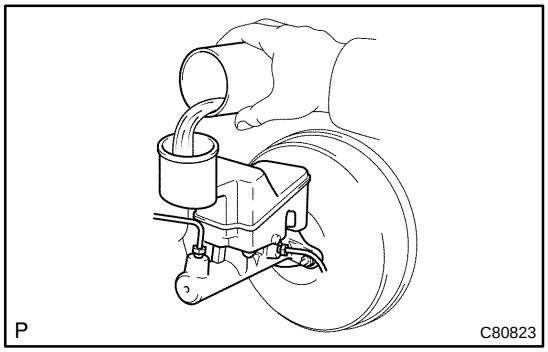

4. CHECK FLUID LEVEL IN RESERVOIR

(a) Check the fluid level and add fluid if necessary.
Fluid: SAE J1703 or FMVSS No. 116 DOT3

FRONT BRAKE

320II–01

COMPONENTS

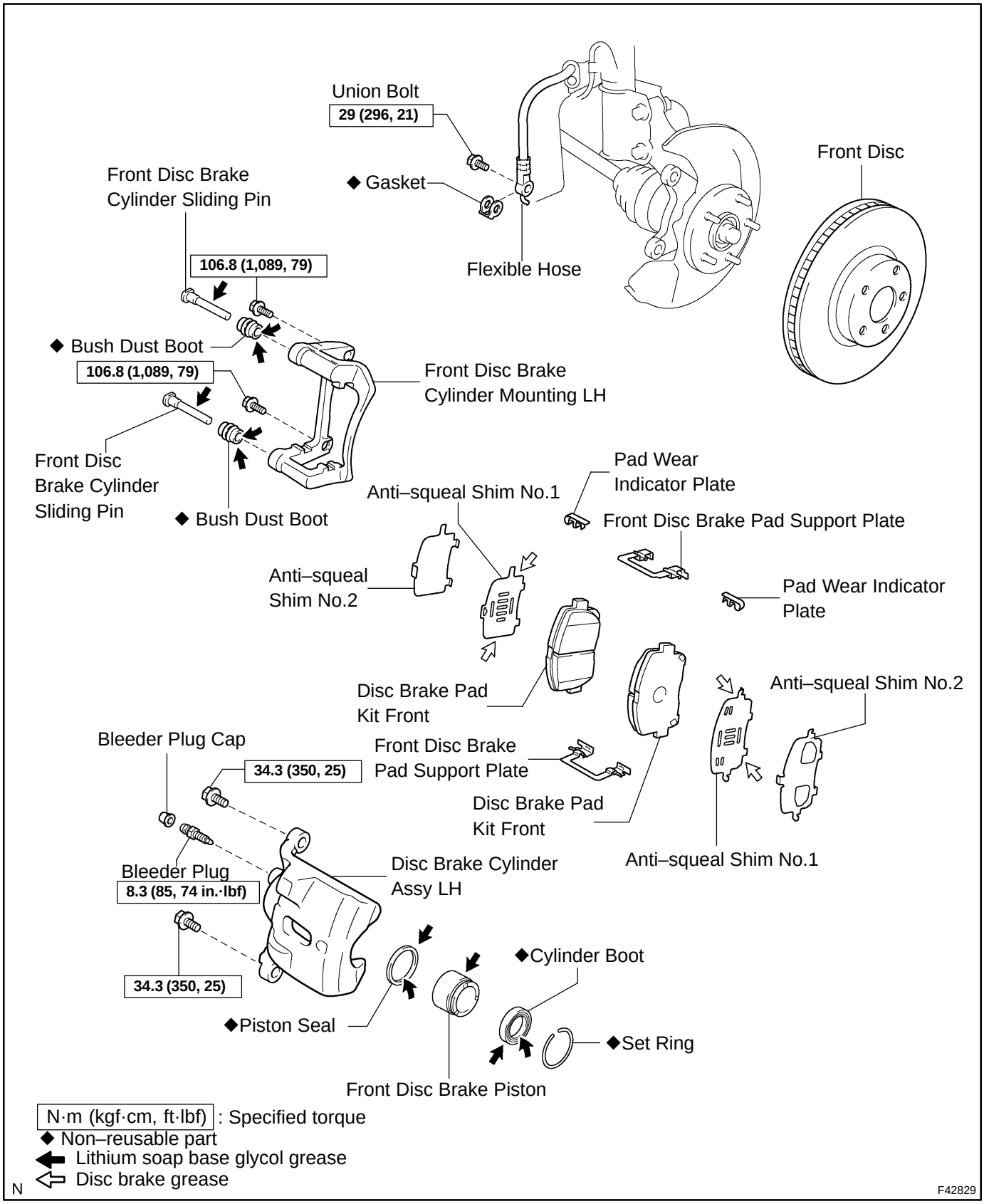

320IJ–01

OVERHAUL

HINT:

Overhaul the RH side by the same procedure as the LH side.

1. REMOVE FRONT WHEEL

2. DRAIN BRAKE FLUID

NOTICE:

Wash the brake fluid off immediately if it comes into contact with any painted surface.

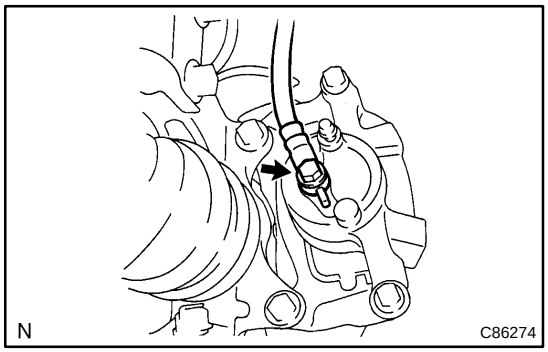

3. REMOVE FRONT DISC BRAKE CYLINDER SUB–ASSY

(a) Remove the union bolt and gasket from the disc brake cylinder, then disconnect the flexible hose.

HINT:

Gasket has 2 types: 2–piece type and 1–piece type.

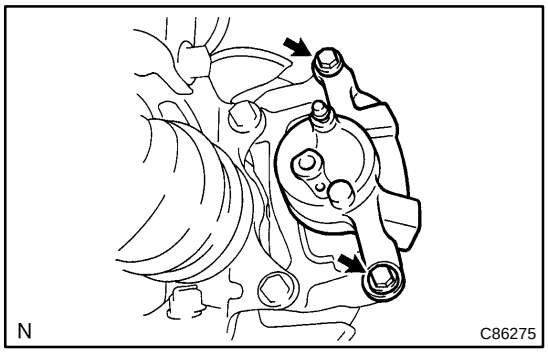

(b) Hold the cylinder slide pin and remove the 2 bolts.

4. REMOVE DISC BRAKE PAD KIT FRONT (PAD ONLY)

(a) Remove the 2 brake pads with anti–squeal shims.

(b) Remove the anti–squeal shim No.1 and anti–squeal shim No.2 from each pad.

5. REMOVE FRONT DISC BRAKE PAD SUPPORT PLATE

(a) Remove the 2 front disc brake pad support plates from the cylinder mounting.

6. REMOVE FRONT DISC BRAKE CYLINDER SLIDE PIN

(a) Remove the 2 cylinder slide pins from the disc brake cylinder mounting.

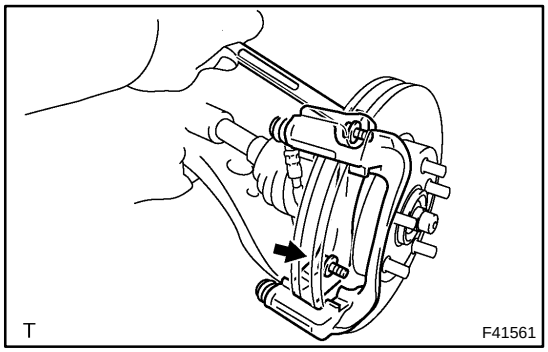

7. REMOVE FRONT DISC BRAKE CYLINDER MOUNTING LH

(a) Remove the 2 bolts and disc brake cylinder mounting.

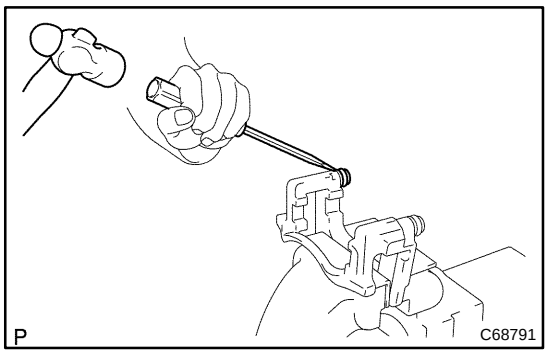

8. REMOVE FRONT DISC BRAKE BUSH DUST BOOT

(a) Place front disc brake cylinder mounting in vise.

(b) Using a screwdriver and hammer, remove the 2 bush dust boots from the disc brake cylinder mounting.

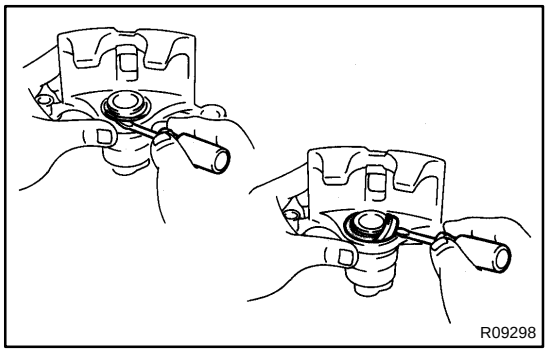

9. REMOVE CYLINDER BOOT

(a) Using a screwdriver, remove the set ring and cylinder boot.

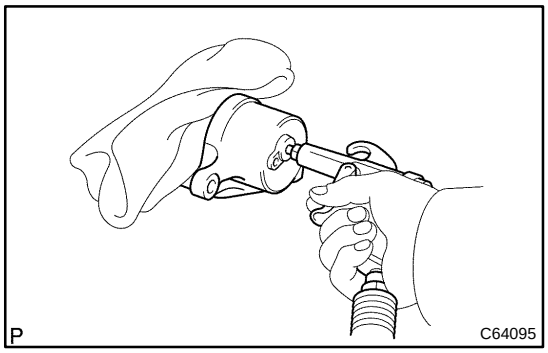

10. REMOVE FRONT DISC BRAKE PISTON

(a) Place a piece of cloth or similar, between the piston and the disc brake cylinder.

(b) Use compressed air to remove the piston from the disc brake cylinder.

CAUTION:

Do not place your fingers in front of the piston when using compressed air.

NOTICE:

Do not spatter the brake fluid.

11. REMOVE PISTON SEAL

(a) Using a screwdriver, remove the piston seal from the disc brake cylinder.

12. REMOVE FRONT DISC BRAKE BLEEDER PLUG

(a) Remove the bleeder plug cap and bleeder plug from the disc brake cylinder.

13. INSPECT BRAKE CYLINDER AND PISTON

(a) Check the cylinder bore and piston for rust or scoring.

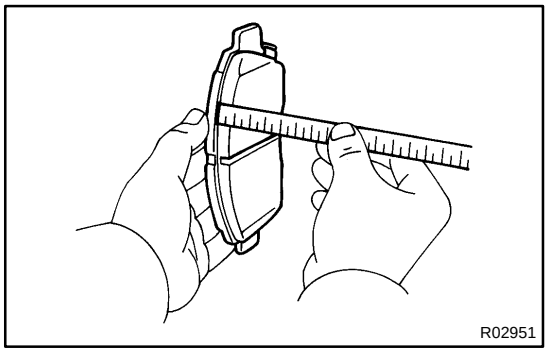

14. INSPECT PAD LINING THICKNESS

(a) Using a ruler, measure the pad lining thickness.

Standard thickness: 11.0 mm (0.433 in.)

Minimum thickness: 1.0 mm (0.039 in.)

15. INSPECT FRONT DISC BRAKE PAD SUPPORT PLATE

(a) Make sure that they have sufficient rebound, no deformation, cracks or wear, and have had all rust and dirt cleaned off.

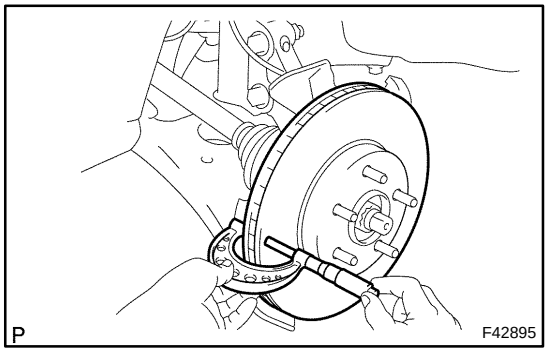

16. INSPECT DISC THICKNESS

(a) Using a micrometer, measure the disc thickness.
Standard thickness: 25.0 mm (0.984 in.)
Minimum thickness: 23.0 mm (0.906 in.)

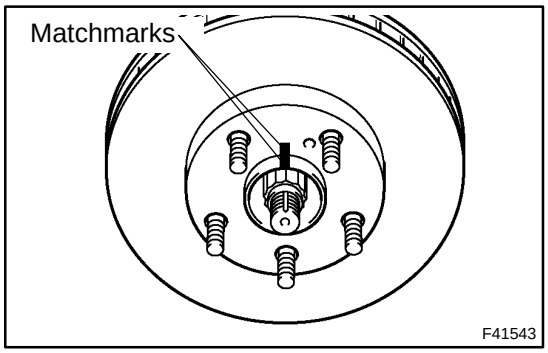

17. REMOVE FRONT DISC

(a) Make matchmarks on the front disc and the axle hub.
(b) Remove the front disc.

18. INSTALL FRONT DISC

(a) Aligning the matchmarks, install the front disc.

HINT:
Select the installation position where the front disc has the minimum runout.

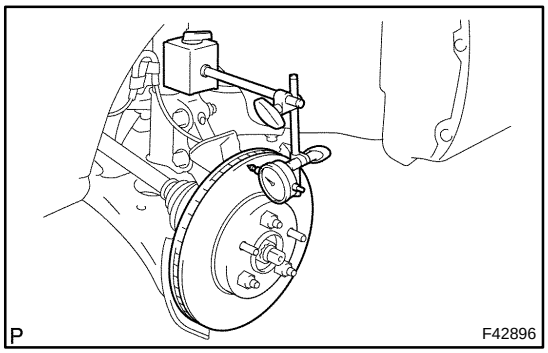

19. INSPECT DISC RUNOUT

(a) Temporarily fasten the disc with hub nuts.
Torque: 103 N·m (1,050 kgf·cm, 76 ft·lbf)
(b) Using a dial indicator, measure the disc runout 10 mm (0.39 in.) away from the outer edge of the disc.
Maximum disc runout: 0.05 mm (0.0020 in.)
(c) If the disc runout is the maximum value or greater, check the bearing play in the axial direction and check the axle hub runout (See page 30–2). If the bearing play and axle hub runout are normal, adjust the disc runout or grind it on a ”On–car” brake lathe.

20. TEMPORARY TIGHTEN FRONT DISC BRAKE BLEEDER PLUG

(a) Temporarily tighten the bleeder plug, and install bleeder plug cap to the disc brake cylinder.

21. INSTALL PISTON SEAL

(a) Apply the lithium soap base glycol grease on a new piston seal.
(b) Install the piston seal to the disc brake cylinder.

22. INSTALL FRONT DISC BRAKE PISTON

(a) Apply the lithium soap base glycol grease on the piston.
(b) Install the piston to the disc brake cylinder.

NOTICE:
Do not screw the piston forcedly in the disc brake cylinder.

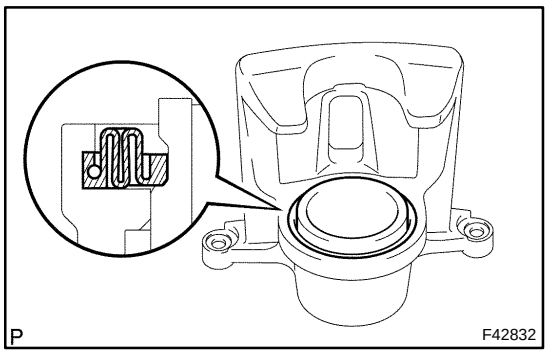

23. INSTALL CYLINDER BOOT

(a) Apply the lithium soap base glycol grease to a new cylinder boot. Install the cylinder boot to the disc brake cylinder.

HINT:

Install the boot securely to the grooves of the cylinder and piston.

(b) Using a screwdriver, install the set ring.

NOTICE:

Do not damage the cylinder boot.

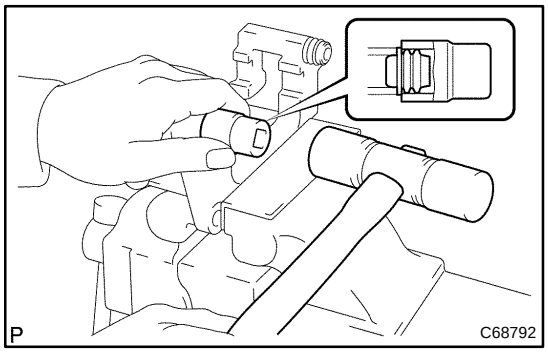

24. INSTALL FRONT DISC BRAKE BUSH DUST BOOT

(a) Place front disc brake cylinder mounting in vise.

(b) Apply the lithium soap base glycol grease to seal surface of 2 new bush dust boots.

(c) Using a socket wrench (19 mm) and hammer, drive the 2 bush dust boots to the disc brake cylinder mounting.

25. INSTALL FRONT DISC BRAKE CYLINDER MOUNTING LH

(a) Install the disc brake cylinder mounting LH with the 2 bolts.
Torque: 106.8 N·m (1,089 kgf·cm, 79 ft·lbf)

26. INSTALL FRONT DISC BRAKE CYLINDER SLIDE PIN

(a) Apply the lithium soap base glycol grease to the sliding part and the seal surface of the 2 cylinder slide pins.

(b) Install the 2 cylinder slide pins to the disc brake cylinder mounting.

27. INSTALL FRONT DISC BRAKE PAD SUPPORT PLATE

(a) Install the 2 front disc brake pad support plates to the cylinder mounting.

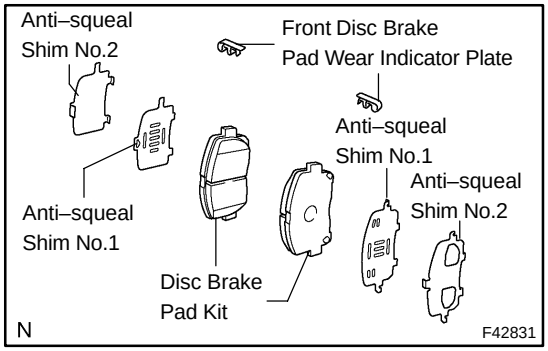

28. INSTALL DISC BRAKE PAD KIT FRONT (PAD ONLY)

NOTICE:

If necessary, replace the anti–squeal shim kit when replacing the brake pad.

(a) Apply disc brake grease to each anti–squeal shim No.1.

(b) Install anti–squeal shims on each pad.

(c) Install the pad wear indicator plate facing upward, and install each pad.

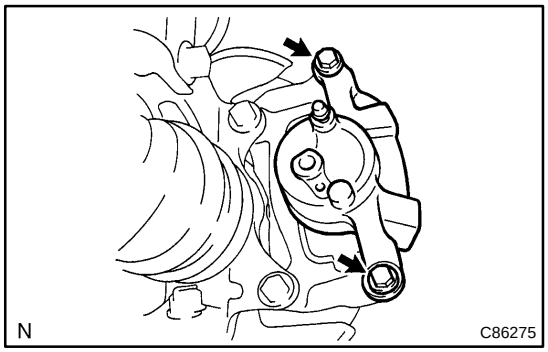

29. INSTALL FRONT DISC BRAKE CYLINDER SUB–ASSY

(a) Install the disc brake cylinder with the 2 bolts.
Torque: 34.3 N·m (350 kgf·cm, 25 ft·lbf)

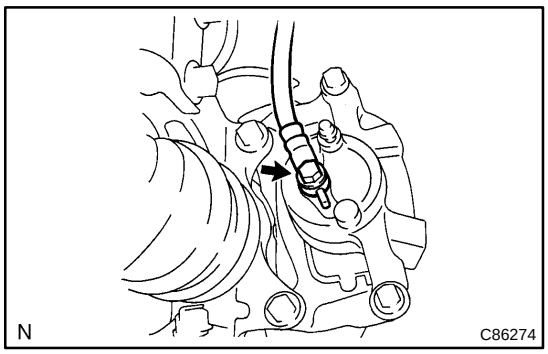

(b) Install a new gasket and flexible hose with the union bolt.
Torque: 29 N·m (296 kgf·cm, 21 ft·lbf)

HINT:

- Gasket has 2 types: 2–piece type and 1–piece type.
- Install the flexible hose lock securely in the lock hole in the disc brake cylinder.

30. FILL RESERVOIR WITH BRAKE FLUID

31. BLEED MASTER CYLINDER (See page 32–4)

SST 09023–00100

32. BLEED BRAKE LINE (See page 32–4)

33. CHECK FLUID LEVEL IN RESERVOIR

34. CHECK BRAKE FLUID LEAKAGE

35. INSTALL FRONT WHEEL

Torque: 103 N·m (1,050 kgf·cm, 76 ft·lbf)

BRAKE SYSTEM

320I7–01

PRECAUTION

- **Care must be taken to replace each part properly, because it could affect the performance of the brake system and result in a driving hazard. Replace the parts with the parts which have the same part number or equivalent.**
- **It is very important to keep parts and the area clean when repairing the brake system.**
- **If the vehicle is equipped with a mobile communication system, refer to the precaution in the introduction section.**

PROPORTIONING VALVE ASSY

320IM–01

ON–VEHICLE INSPECTION

1. INSTALL LSPV GAUGE (SST) AND BLEED AIR

(a) Remove the bleeder plugs from the front and rear brake cylinder.

(b) Install the LSPV gauge (SST), and bleed the air.
SST 09709–29018

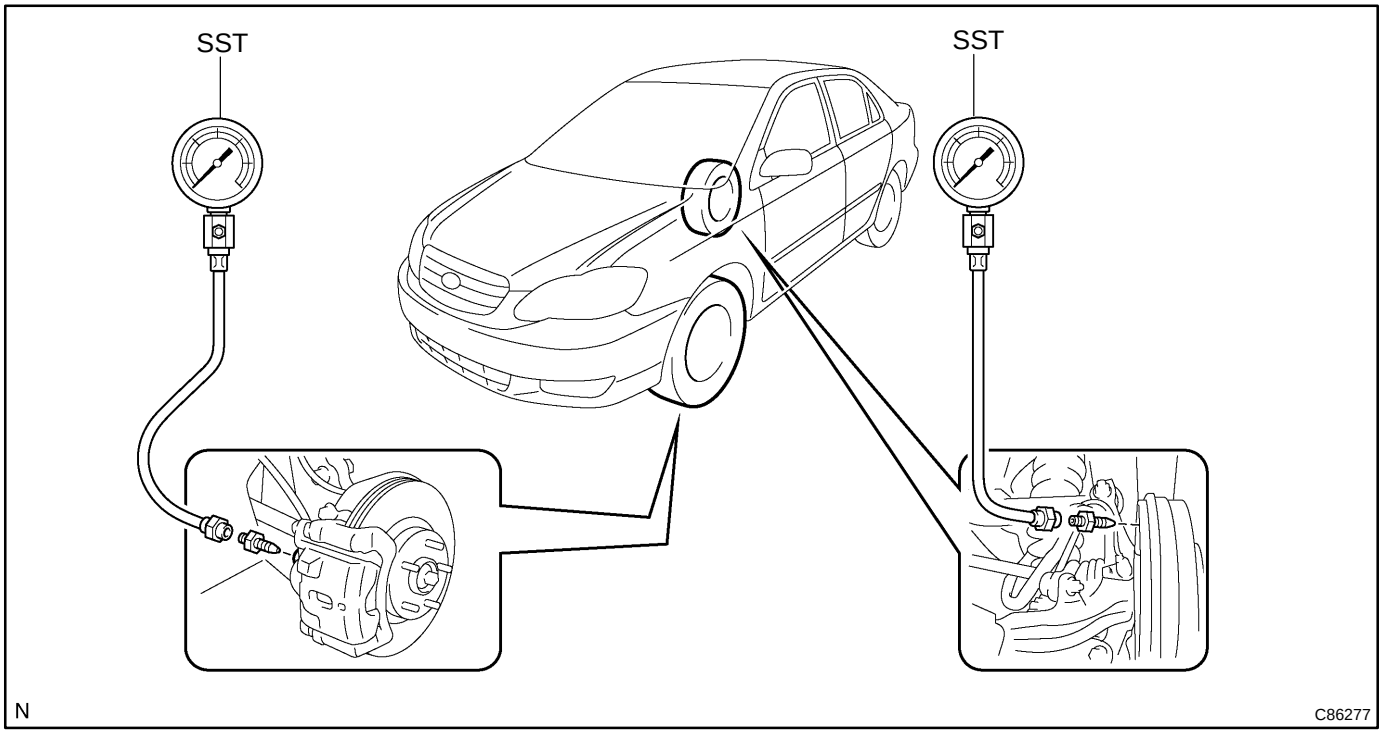

2. RAISE MASTER CYLINDER PRESSURE AND CHECK REAR WHEEL CYLINDER PRESSURE

Master cylinder pressure	Rear wheel cylinder pressure
2,942 kPa (30 kgf/cm^2, 427 psi)	2,942 kPa (30 kgf/cm^2, 427 psi)
4,903 kPa (50 kgf/cm^2, 711 psi)	3,667 kPa (37 kgf/cm^2, 531 psi)
7,845 kPa (80 kgf/cm^2, 1,138 psi)	4,756 kPa (49 kgf/cm^2, 689 psi)

HINT:

When inspecting the fluid pressure, inspect the left front and right rear together, and the right front and left rear together.

If the rear wheel cylinder pressure is imprper, replace the proportioning valve assy.

3. REMOVE LSPV GAUGE (SST)

(a) Remove the LSPV gauge (SST).
SST 09709–29018

(b) Install the bleeder plugs.
Torque: 8.3 N·m (85 kgf·cm, 74 in.·lbf)

4. BLEED MASTER CYLINDER (See page 32–4)
SST 09023–00100

5. BLEED BRAKE LINE (See page 32–4)

6. CHECK FOR LEAKS

320IN–01

REPLACEMENT

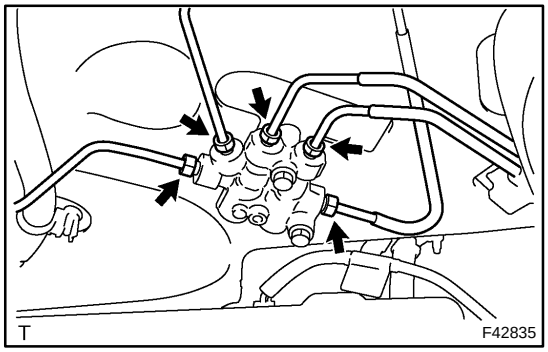

1. REMOVE PROPORTIONING VALVE ASSY

(a) Using SST, disconnect the 5 brake tubes from the proportioning valve assy.
SST 09023–00100

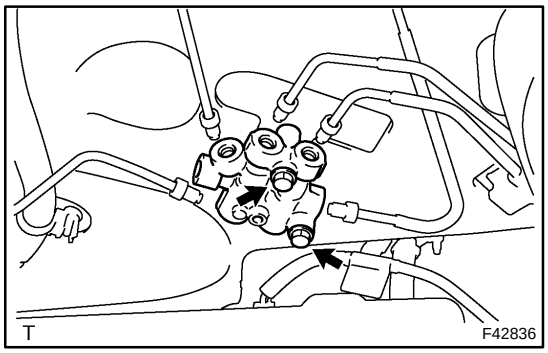

(b) Remove the 2 bolts and proportioning valve assy from the body.

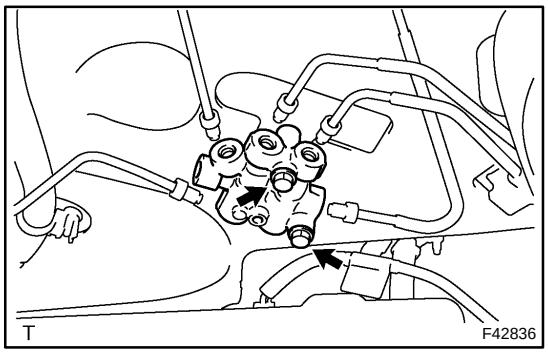

2. INSTALL PROPORTIONING VALVE ASSY

(a) Install the proportioning valve assy with the 2 bolts.
Torque: 5.4 N·m (55 kgf·cm, 48 in·lbf)

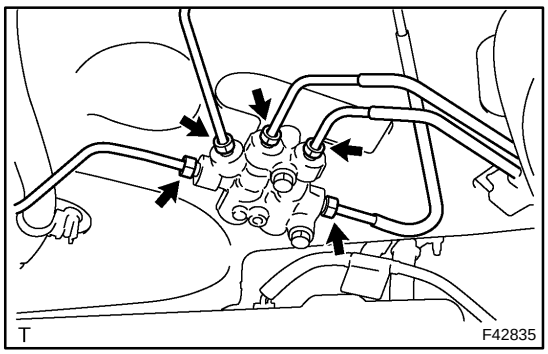

(b) Using SST, connect the 5 brake tubes to the proportioning valve assy.
SST 09023–00100
Torque: 15.2 N·m (155 kgf·cm, 11 ft·lbf)

3. FILL RESERVOIR WITH BRAKE FLUID

4. BLEED MASTER CYLINDER (See page 32–4)
SST 09023–00100

5. BLEED BRAKE LINE (See page 32–4)

6. CHECK FLUID LEVEL IN RESERVOIR

REAR BRAKE

COMPONENTS

320IK–01

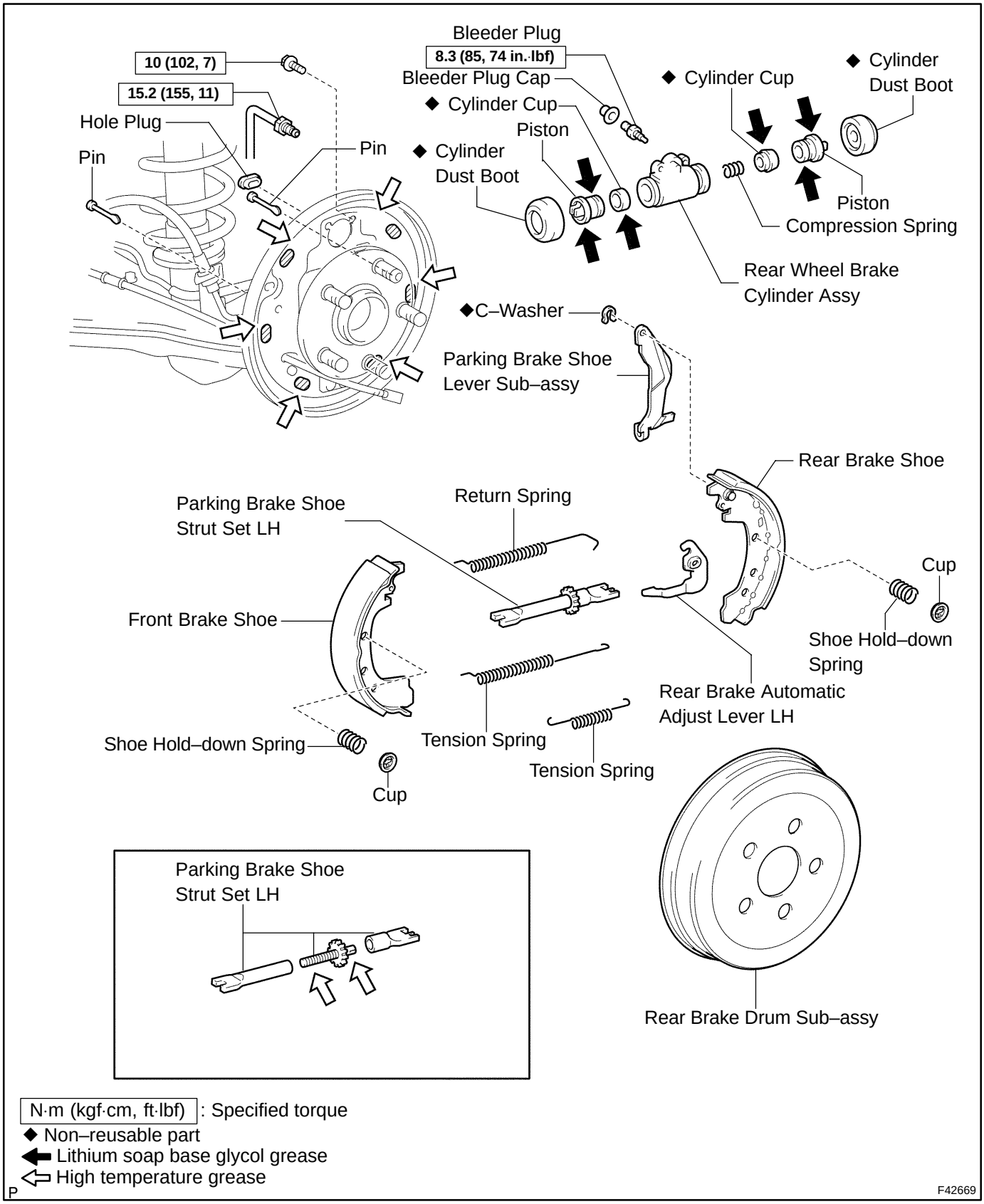

N·m (kgf·cm, ft·lbf) : Specified torque
◆ Non–reusable part
⬅ Lithium soap base glycol grease
⇦ High temperature grease

P

F42669

320IL–01

OVERHAUL

HINT:

Overhaul the RH side by the same procedures with LH side.

1. REMOVE REAR WHEEL

2. DRAIN BRAKE FLUID

NOTICE:

Wash the brake fluid off immediately if it comes into contact with any painted surface.

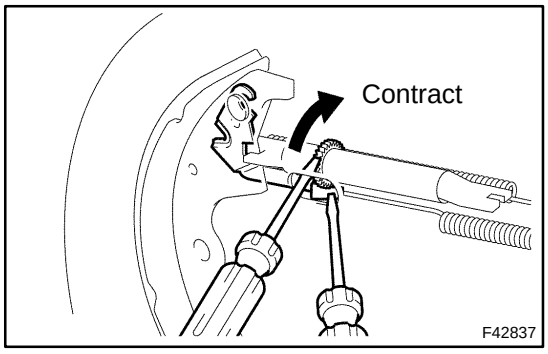

3. REMOVE REAR BRAKE DRUM SUB–ASSY

(a) Release the parking brake lever, and remove the brake drum.

HINT:

If the brake drum cannot be removed easily, do the following steps.

(b) Remove the hole plug and insert a screwdriver through the hole in the backing plate, and hold the automatic adjusting lever away from the adjuster.

(c) Using a another screwdriver, reduce the brake shoe adjuster by turning the adjusting wheel.

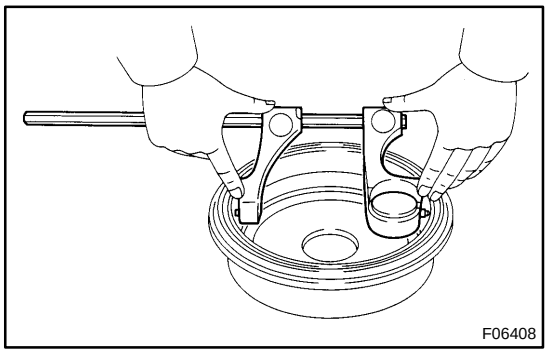

4. INSPECT BRAKE DRUM INSIDE DIAMETER

(a) Using a brake drum gauge or equivalent, measure the inside diameter of the drum.

Standard inside diameter: 200.0 mm (7.874 in.)
Maximum inside diameter: 201.0 mm (7.913 in.)

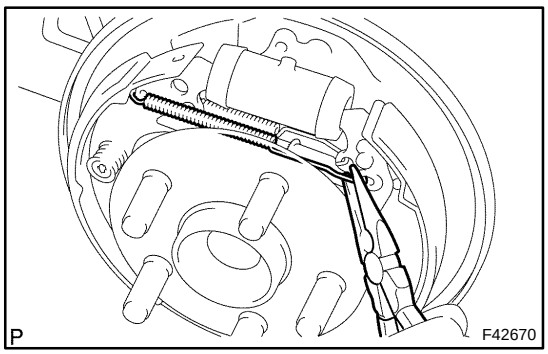

5. REMOVE REAR BRAKE AUTOMATIC ADJUST LEVER LH

(a) Using a needle–nose pliers, remove the upper side tension spring.

(b) Remove the rear brake automatic adjust lever LH from the rear brake shoe.

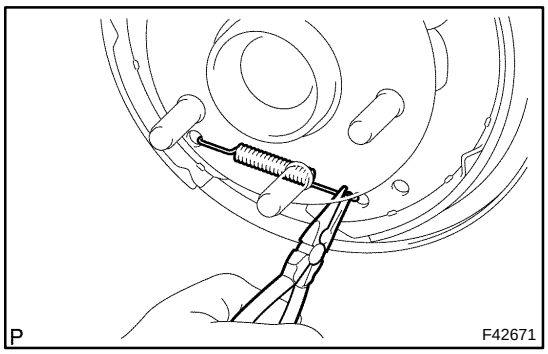

6. REMOVE FRONT BRAKE SHOE

(a) Using a needle–nose pliers, remove the anchor side tension spring.

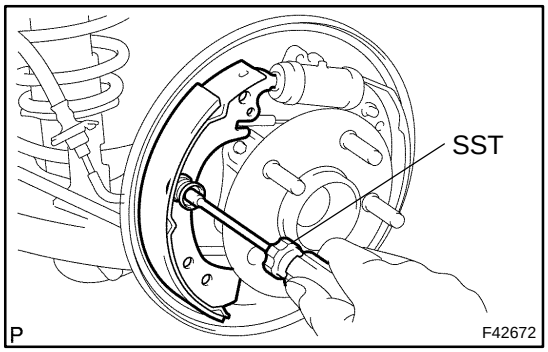

(b) Using SST, remove the cup, shoe hold–down spring and pin.
SST 09718–00010

(c) Disconnect the upper side return spring from the front brake shoe, and remove the front brake shoe.

7. REMOVE PARKING BRAKE SHOE STRUT SET LH

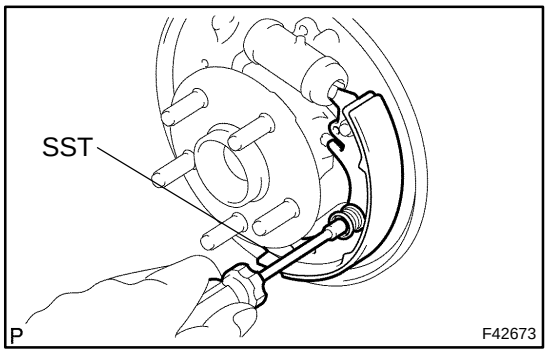

8. REMOVE REAR BRAKE SHOE

(a) Using SST, remove the cup, shoe hold–down spring and pin.
SST 09718–00010

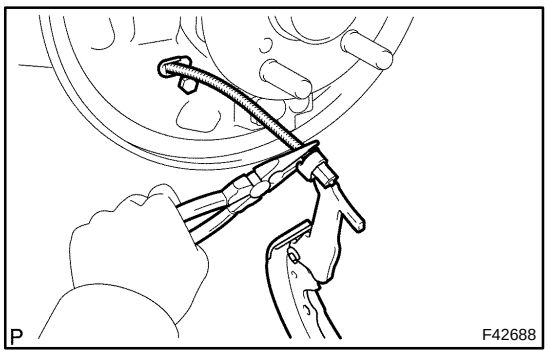

(b) Using a needle–nose pliers, disconnect the parking brake cable No.3 and remove the rear brake shoe.

(c) Remove the upper side return spring from the rear brake shoe.

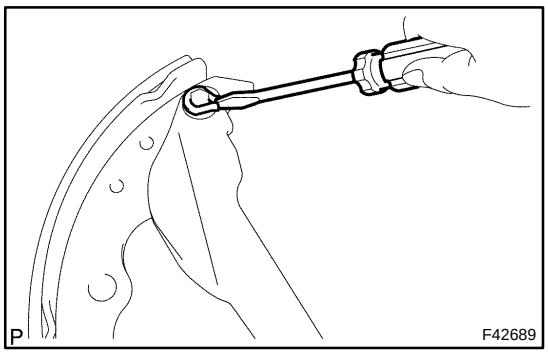

9. REMOVE REAR BRAKE PARKING BRAKE SHOE LEVER SUB–ASSY

(a) Using a screwdriver, remove the C–washer and parking brake shoe lever.

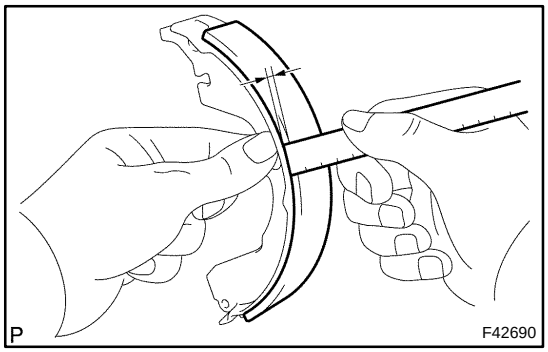

10. INSPECT REAR DRUM BRAKE SHOE LINING THICKNESS

(a) Using a ruler, measure the thickness of the shoe lining.
Standard thickness: 4.4 mm (0.173 in.)
Minimum thickness: 1.0 mm (0.039 in.)

If the lining thickness is at the minimum thickness or less, or if there is severe, uneven wear, replace the brake shoe.

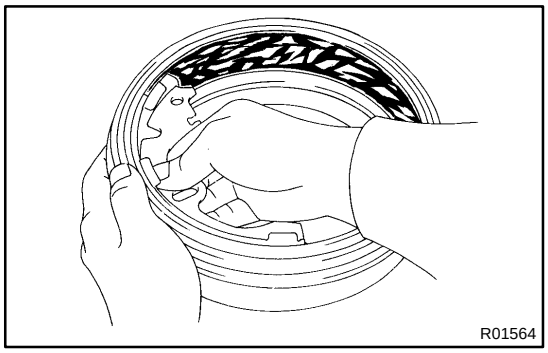

11. INSPECT BRAKE DRUM AND REAR DRUM BRAKE SHOE LINING FOR PROPER CONTACT

(a) Apply chalk to the inside surface of the drum, then grind drum on the brake shoe lining to fit.

If the contact between the drum and the shoe lining is improper, repair it using a brake shoe grinder or replace the brake shoe assembly.

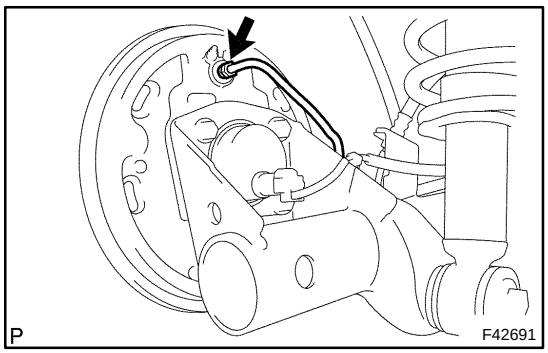

12. REMOVE RH, FRONT OR UPPER REAR WHEEL BRAKE CYLINDER ASSY

(a) Using SST, disconnect the brake tube, use a container to catch brake fluid.
SST 09023–00100

(b) Remove the bolt and wheel cylinder.

13. REMOVE REAR WHEEL CYLINDER CUP KIT

(a) Remove the 2 cylinder dust boots from the wheel cylinder.
(b) Remove the 2 pistons and compression spring.
(c) Remove the 2 wheel cylinder cups from each piston.
(d) Remove the bleeder plug cap and bleeder plug from the wheel cylinder.

14. INSPECT BRAKE WHEEL CYLINDER

(a) Check the cylinder bore and piston for rust or scoring.

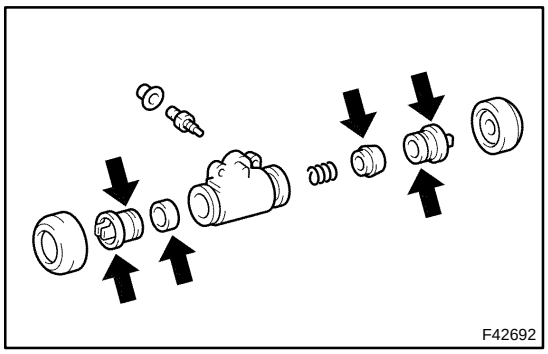

15. INSTALL REAR WHEEL CYLINDER CUP KIT

(a) Temporary tighten the bleeder plug to the wheel cylinder, and install the bleeder plug cap.
(b) Apply the lithium soap base glycol grease to 2 new wheel cylinder cups and the 2 pistons.
(c) Install the 2 wheel cylinder cups to each piston.
(d) Install the compression spring and 2 pistons to the wheel cylinder.
(e) Install 2 new cylinder dust boots to the wheel cylinder.

16. INSTALL RH, FRONT OR UPPER REAR WHEEL BRAKE CYLINDER ASSY

(a) Install the wheel cylinder with the bolt.
Torque: 10 N·m (102 kgf·cm, 7 ft·lbf)
(b) Using SST, connect the brake tube.
SST 09023–00100
Torque: 15.2 N·m (155 kgf·cm, 11 ft·lbf)

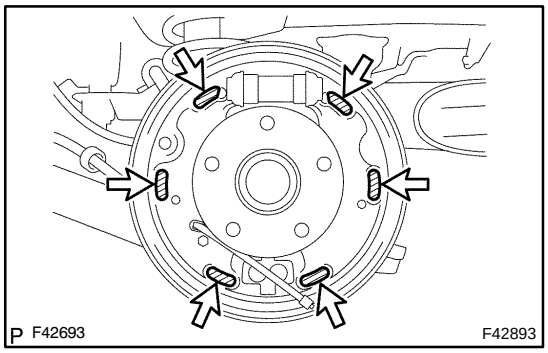

17. APPLICATION HIGH TEMPERATURE GREASE

(a) Apply the high temperature grease to the shoe attached surface of backing plate.

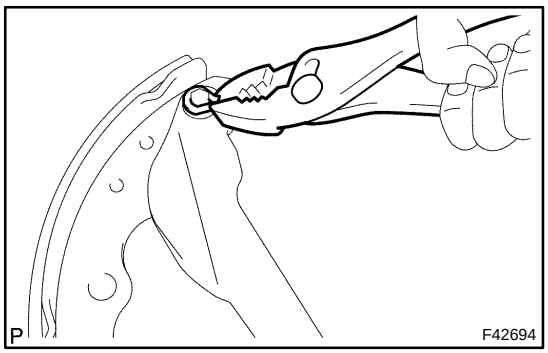

18. INSTALL REAR BRAKE PARKING BRAKE SHOE LEVER SUB–ASSY

(a) Using a pliers, install the parking brake shoe lever with a new C–washer.

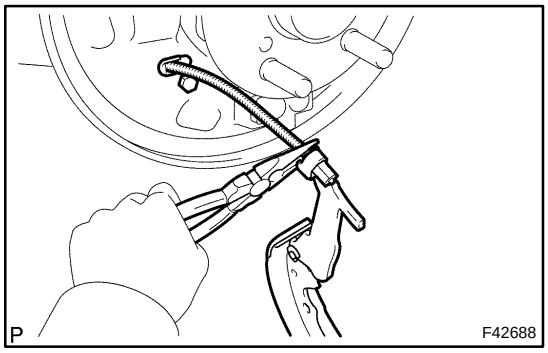

19. INSTALL REAR BRAKE SHOE

(a) Using a needle–nose pliers, connect the parking brake cable No.3 to the parking brake shoe lever.

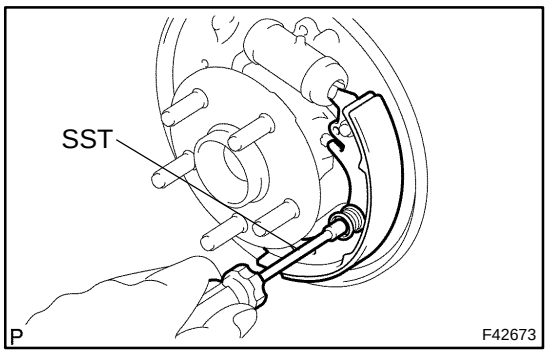

(b) Using SST, install the rear brake shoe, pin, shoe hold–down spring and cup.
SST 09718–00010

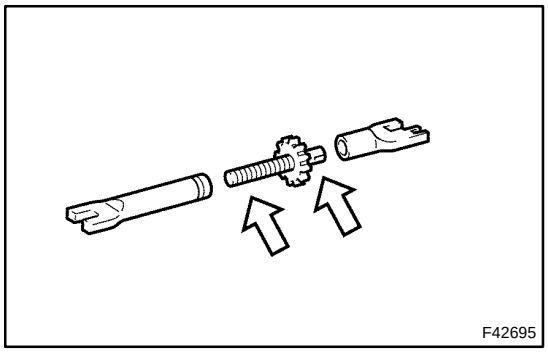

20. INSTALL PARKING BRAKE SHOE STRUT SET LH

(a) Apply the high temperature grease to the adjusting bolt.

(b) Install the parking brake shoe strut set LH to the rear brake shoe.

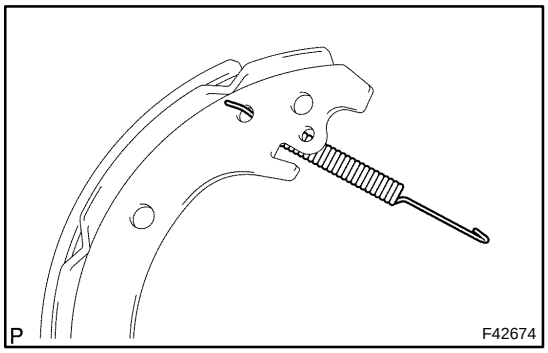

21. INSTALL FRONT BRAKE SHOE

(a) Connect the upper side return spring to the front brake shoe.

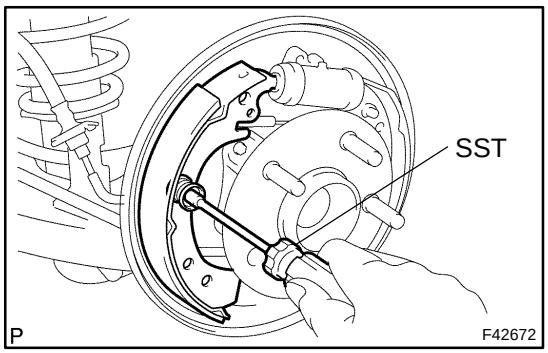

(b) Using SST, install the front brake shoe, pin, shoe hold–down spring and cup.
SST 09718–00010

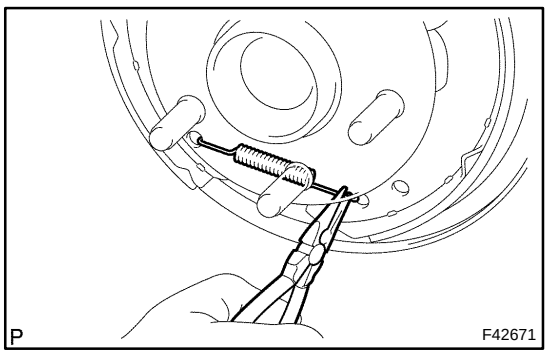

(c) Using a needle–nose pliers, install the anchor side tension spring to each shoe.

22. INSTALL REAR BRAKE AUTOMATIC ADJUST LEVER LH

(a) Install the rear brake automatic adjust lever LH to the rear brake shoe.

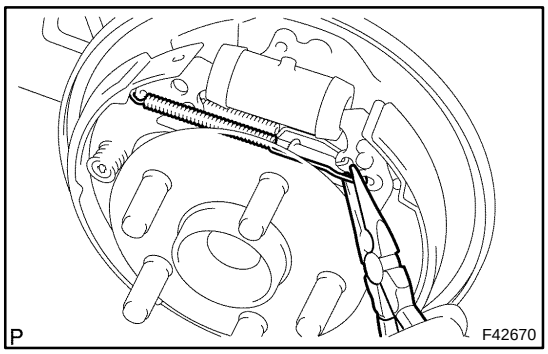

(b) Using a needle–nose pliers, install the upper side tension spring.

23. CHECK REAR DRUM BRAKE INSTALLATION

(a) Check that each part is installed properly.

NOTICE:

There should be no oil or grease adhering to the friction surfaces of the shoe lining and drum.

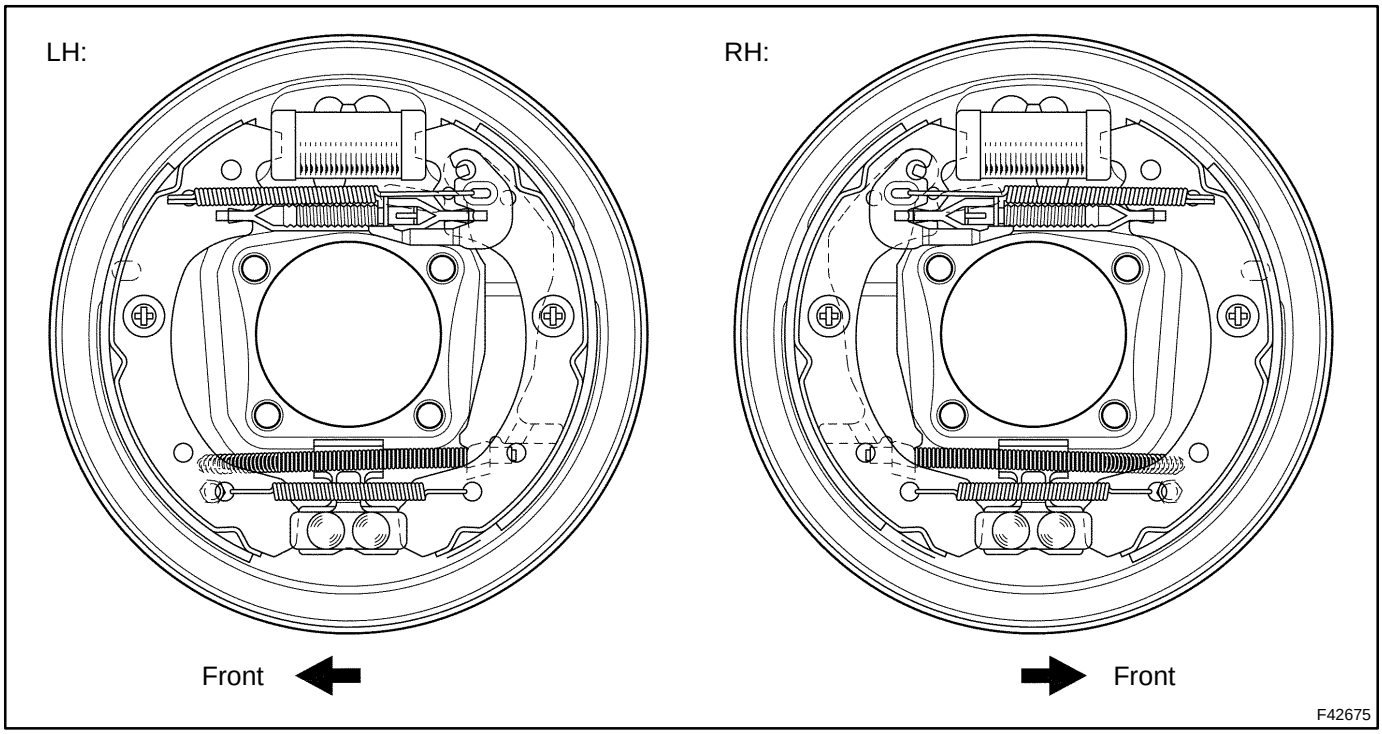

24. INSTALL REAR BRAKE DRUM SUB–ASSY

25. ADJUST REAR DRUM BRAKE SHOE CLEARANCE

(a) Temporarily install the hub nuts.

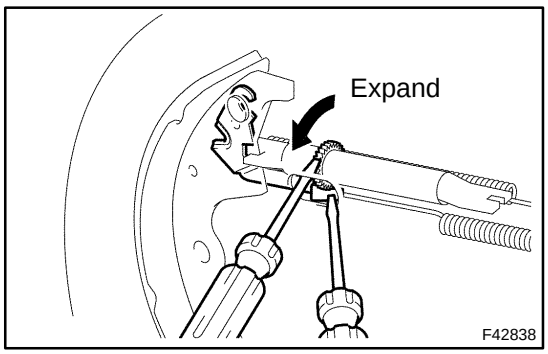

(b) Remove the hole plug, and turn the adjuster and expand the shoe until the drum locks.

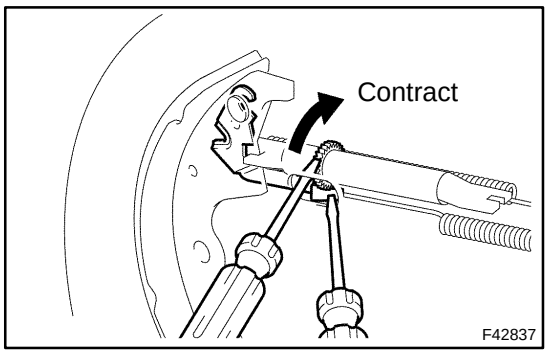

(c) Using a screwdriver, back off the adjuster 8 notches.
(d) Install the hole plug.

26. FILL RESERVOIR WITH BRAKE FLUID
27. BLEED MASTER CYLINDER (See page 32–4)
SST 09023–00100
28. BLEED BRAKE LINE (See page 32–4)
29. CHECK FLUID LEVEL IN RESERVOIR
30. CHECK BRAKE FLUID LEAKAGE
31. INSTALL REAR WHEEL
32. INSPECT PARKING BRAKE LEVER TRAVEL (See page 33–2)
33. ADJUST PARKING BRAKE LEVER TRAVEL (See page 33–2)

SKID CONTROL SENSOR

320IR–02

REPLACEMENT

HINT:

Replace the RH side by the same procedure as the LH side.

1. **REMOVE REAR WHEEL**
2. **REMOVE REAR BRAKE DRUM SUB–ASSY (See page 32–31)**

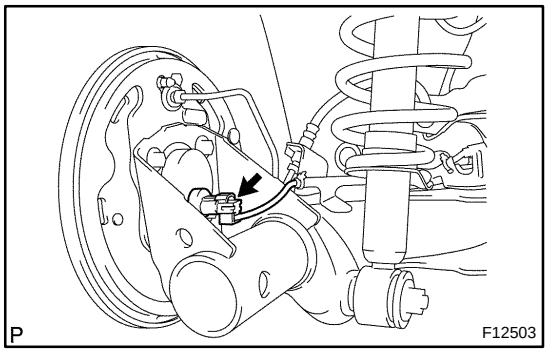

3. **DISCONNECT SKID CONTROL SENSOR WIRE**

(a) Disconnect the skid control sensor wire connector from the skid control sensor.

4. **REMOVE REAR AXLE HUB & BEARING ASSY LH (See page 30–24)**

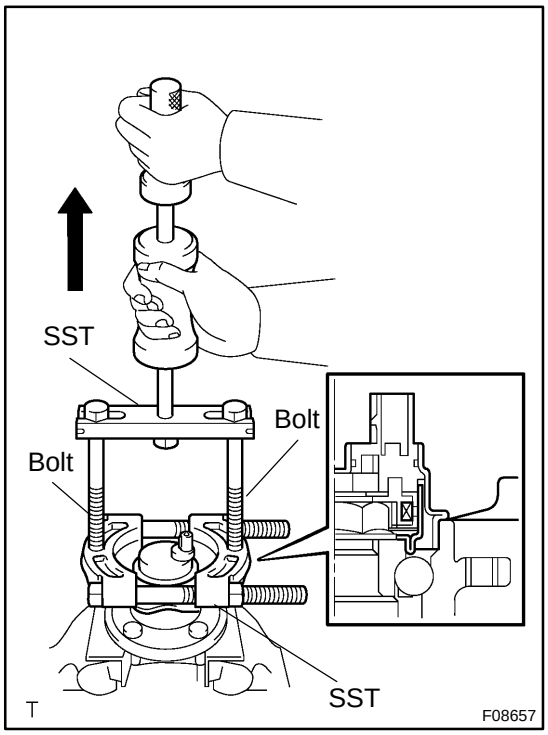

5. **REMOVE SKID CONTROL SENSOR**

(a) Mount the rear axle hub in a soft jaw vise.

NOTICE:

Replace the axle hub assembly if it is dropped or a strong shock is given to it.

(b) Using a pin punch and hammer, drive out the 2 pins and remove the 2 attachments from SST.

(c) Using SST and 2 bolts (Diameter: 12 mm, pitch: 1.5 mm), remove the skid control sensor from the rear axle hub.

SST 09520–00031 (09520–00040), 09521–00020, 09950–00020

NOTICE:

- **If a damage is inflicted to the sensor rotor, replace the axle hub assembly.**
- **Do not scratch the contacting surface of axle hub and speed sensor.**

6. INSTALL SKID CONTROL SENSOR

(a) Clean the contacting surface of the axle hub and a new speed sensor.

NOTICE:

Do not stick any foreign objects to the sensor rotor.

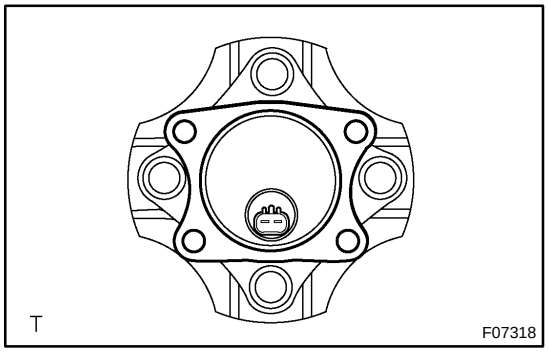

(b) Place the speed sensor on the axle hub so that the connector makes the lowest position under the on–vehicle condition.

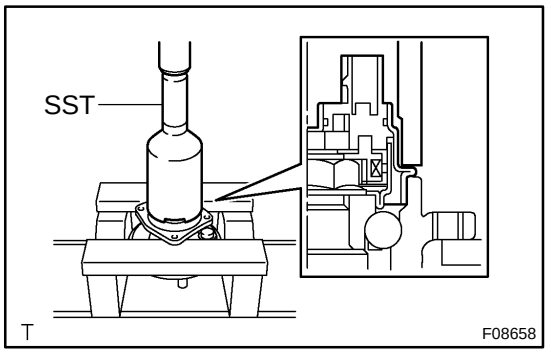

(c) Using SST and press, install the new speed sensor to the axle hub.

SST 09214–76011

7. INSTALL REAR AXLE HUB & BEARING ASSY LH (See page 30–24)

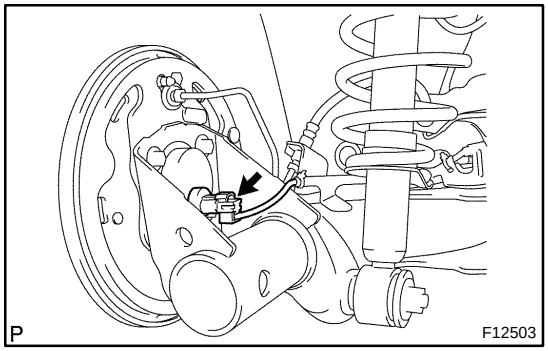

8. CONNECT SKID CONTROL SENSOR WIRE

(a) Connect the skid control sensor wire connector to the skid control sensor.

9. INSTALL REAR BRAKE DRUM SUB–ASSY (See page 32–31)

10. INSTALL REAR WHEEL

Torque: 103 N·m (1,050 kgf·cm, 76 ft·lbf)

11. INSPECT AND ADJUST REAR WHEEL ALIGNMENT (See page 27–3)

12. CHECK ABS SPEED SENSOR SIGNAL (See page 05–297)

SPEED SENSOR FRONT LH

320IQ–02

REPLACEMENT

HINT:

Replace the RH side by the same procedure as the LH side.

1. REMOVE FRONT WHEEL

2. REMOVE FRONT FENDER LINER LH

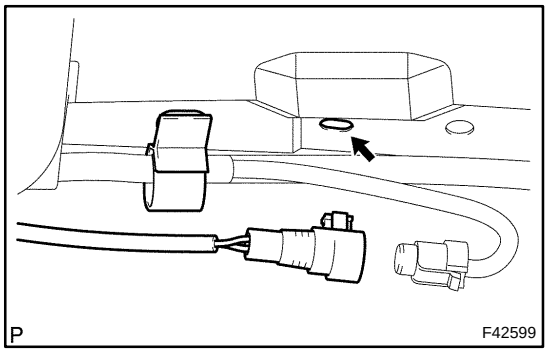

3. REMOVE SPEED SENSOR FRONT LH

(a) Disconnect the speed sensor wire harness clamp from the body.

(b) Disconnect the speed sensor connector.

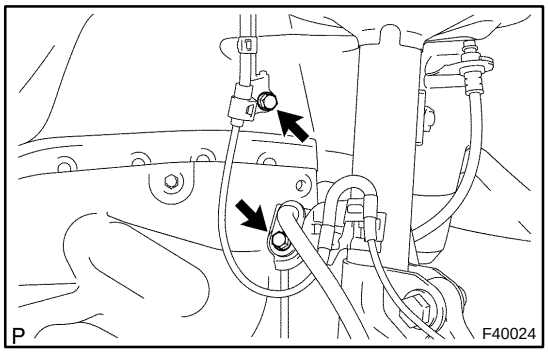

(c) Remove the 2 clamp bolts holding the sensor harness from the body and shock absorber.

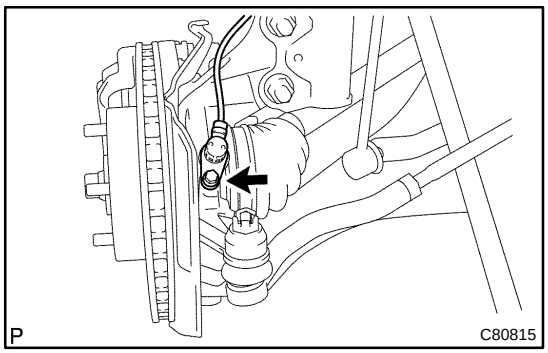

(d) Remove the bolt and speed sensor front LH.

NOTICE:

Keep on the sensor tip clean.

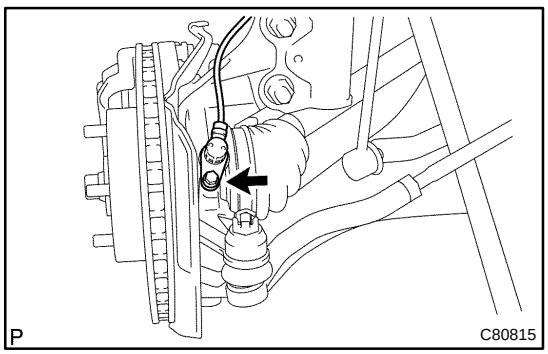

4. INSTALL SPEED SENSOR FRONT LH

(a) Install the speed sensor front LH with the bolt.

Torque: 8.0 N·m (82 kgf·cm, 71 in.·lbf)

NOTICE:

Make sure the sensor tip is clean.

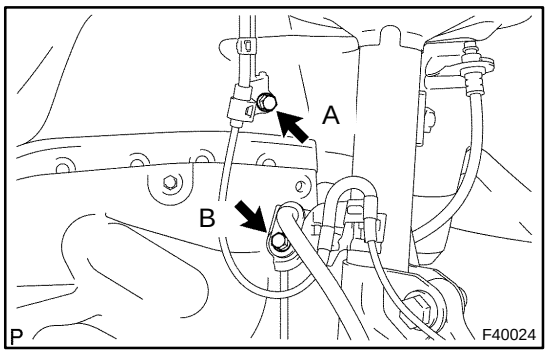

(b) Install the sensor harness clamp with the 2 bolts ”A” and ”B” to the body and shock absorber.
Torque:
Bolt A: 8.0 N·m (82 kgf·cm, 71 in.·lbf)
Bolt B: 29 N·m (296 kgf·cm, 21 ft·lbf)

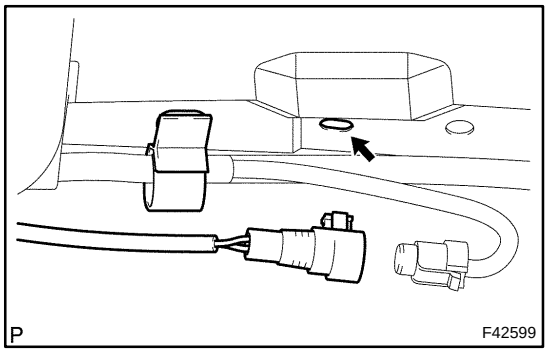

(c) Connect the speed sensor connector.
(d) Connect the speed sensor wire harness clamp to the body.

5. INSTALL FRONT FENDER LINER LH
6. INSTALL FRONT WHEEL
Torque: 103 N·m (1,050 kgf·cm, 76 ft·lbf)
7. CHECK ABS SPEED SENSOR SIGNAL (See page 05–297)

32I8–02

PROBLEM SYMPTOMS TABLE

Use the table below to help you find the cause of the problem. The numbers indicate the probability of the cause of the problem. Check each part in order. If necessary, replace these parts.

Symptom	Suspect Area	See page
Low pedal or spongy pedal	3. Fluid leaks for brake system	–
	4. Air in brake system	32–4
	5. Piston seals (Worn or damaged)	32–25
		32–31
	6. Rear brake shoe clearance (Out of adjustment)	32–31
	7. Master cylinder (faulty)	32–13
	8. Booster push rod (Out of adjustment)	32–13
Brake drag	1. Brake pedal free play (Minimal)	32–6
	2. Parking brake lever travel (Out of adjustment)	33–2
	3. Parking brake wire (Sticking)	33–7
		33–10
	4. Rear brake shoe clearance (Out of adjustment)	32–31
	5. Pad or lining (Cracked or distorted)	32–25
		32–31
	6. Piston (Stuck)	32–25
		32–31
	7. Piston (Frozen)	32–25
		32–31
	8. Tension or return spring (Faulty)	32–31
	9. Booster push rod (Out of adjustment)	32–13
	10.Vacuum leaks for booster system	32–18
	11.Master cylinder (Faulty)	32–13
Brake pull	1. Piston (Stuck)	32–25
		32–31
	2. Pad or lining (Oily)	32–25
		32–31
	3. Piston (Frozen)	32–25
		32–31
	4. Disc (Scored)	32–25
	5. Pad or lining (Cracked or distorted)	32–25
		32–31

Hard pedal but brake inefficient	1. Fluid leaks for brake system	–
	2. Air in brake system	32–4
	3. Pad or lining (Worn)	32–25 32–31
	4. Pad or lining (Cracked or distorted)	32–25 32–31
	5. Rear brake shoe clearance (Out of adjustment)	32–31
	6. Pad or lining (Oily)	32–25 32–31
	7. Pad or lining (Glazed)	32–25 32–31
	8. Disc (Scored)	32–25
	9. Booster push rod (Out of adjustment)	32–13
	10.Vacuum leaks for booster system	32–18
Noise from brakes	1. Pad or lining (Cracked or distorted)	32–25 32–31
	2. Installation bolt (Loose)	32–25
	3. Disc (Scored)	32–25
	4. Pad support plate (Loose)	32–25
	5. Sliding pin (Worn)	32–25
	6. Pad or lining (dirty)	32–25 32–31
	7. Pad or lining (Glazed)	32–25 32–31
	8. Anchor, return or tension spring (Faulty)	32–31
	9. Anti–squeal shim (Damaged)	32–25
	10.Shoe hold–down spring (Damaged)	32–31

3307C–01

ADJUSTMENT

1. REMOVE REAR WHEEL

2. ADJUST REAR DRUM BRAKE SHOE CLEARANCE (See page 32–31)

3. INSTALL REAR WHEEL

Torque: 103 N·m (1,050 kgf·cm, 76 ft·lbf)

4. INSPECT PARKING BRAKE LEVER TRAVEL

(a) Pull the parking brake lever to the fully applied position, and count the number of clicks.

Parking brake lever travel: 6 – 9 clicks at 196 N (20 kgf, 44.1 lbf)

5. ADJUST PARKING BRAKE LEVER TRAVEL

(a) Remove the rear console box sub–assy (See page 71–10).

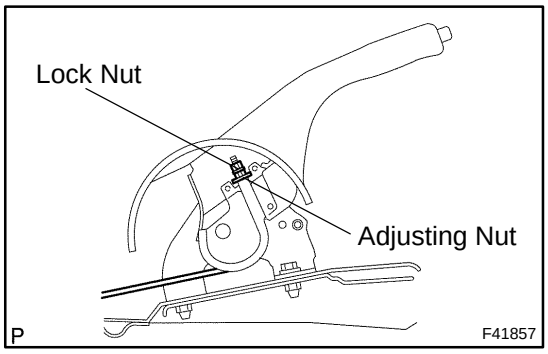

(b) Loosen the lock nut and turn the adjusting nut until the lever travel turns correct.

(c) Tighten the lock nut.

Torque: 5.0 N·m (55 kgf·cm, 44 in.·lbf)

(d) Install the rear console box sub–assy.

PARKING BRAKE CABLE ASSY NO.1

COMPONENTS

3307F–01

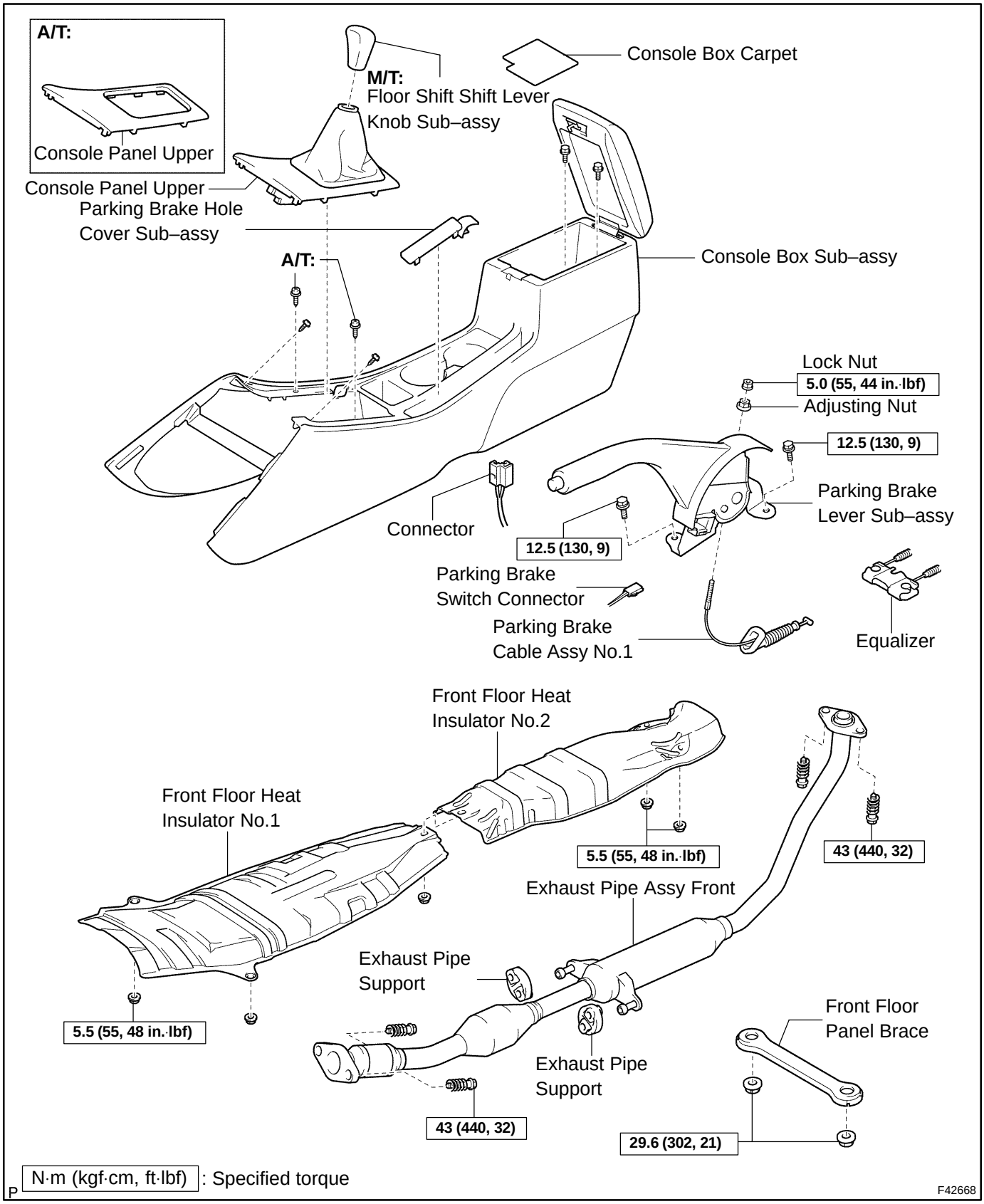

3307G–01

REPLACEMENT

1. REMOVE CONSOLE BOX SUB–ASSY REAR (See page 71–10)
2. REMOVE PARKING BRAKE LEVER SUB–ASSY (See page 33–4)
3. REMOVE EXHAUST PIPE ASSY FRONT (See page 15–2)

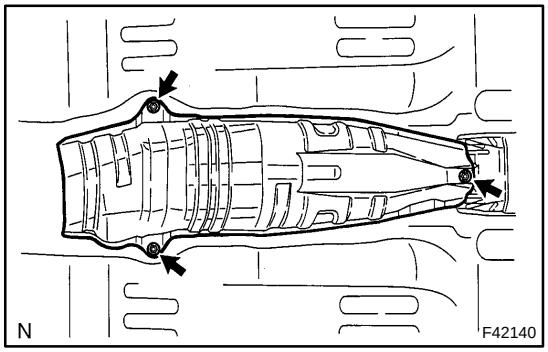

4. REMOVE FRONT FLOOR HEAT INSULATOR NO.1

(a) Remove the 3 nuts and front floor insulator No.1.

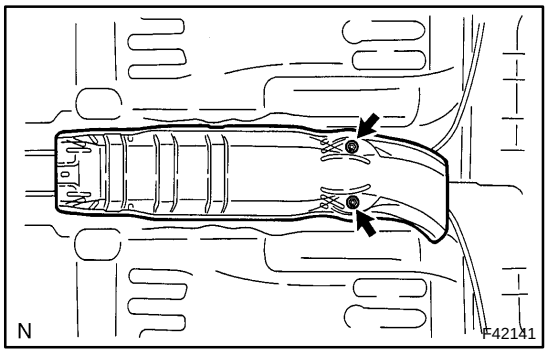

5. REMOVE FRONT FLOOR HEAT INSULATOR NO.2

(a) Remove the 2 nuts and front floor insulator No.2.

6. REMOVE PARKING BRAKE CABLE ASSY NO.1

(a) Disconnect the parking brake cable assy No.1 from the equalizer and remove the parking brake cable assy No.1.

7. INSTALL PARKING BRAKE CABLE ASSY NO.1

(a) Connect the parking brake cable assy No.1 to the equalizer and install the parking brake cable assy No.1.

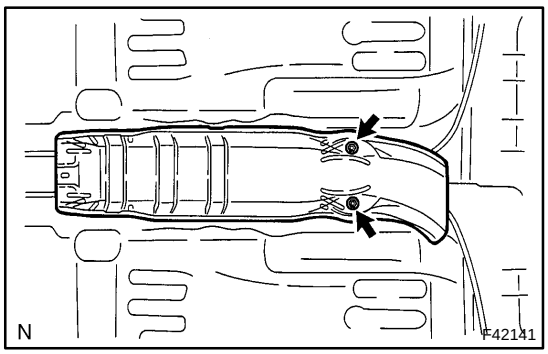

8. INSTALL FRONT FLOOR HEAT INSULATOR NO.2

(a) Install the front floor insulator No.2 with the 2 nuts.
Torque: 5.5 N·m (55 kgf·cm, 48 in.·lbf)

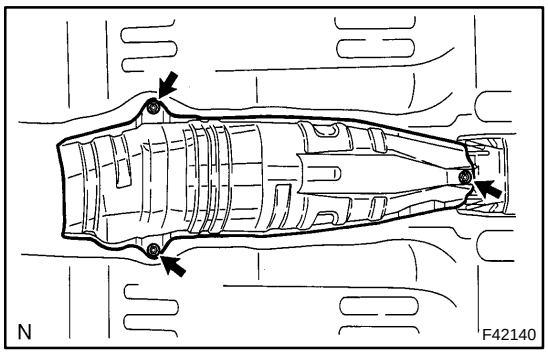

9. INSTALL FRONT FLOOR HEAT INSULATOR NO.1

(a) Install the front floor insulator No.1 with the 3 nuts.
Torque: 5.5 N·m (55 kgf·cm, 48 in.·lbf)

10. INSTALL EXHAUST PIPE ASSY FRONT (See page 15–2)
11. INSTALL PARKING BRAKE LEVER SUB–ASSY (See page 33–4)
12. INSPECT PARKING BRAKE LEVER TRAVEL (See page 33–2)
13. ADJUST PARKING BRAKE LEVER TRAVEL (See page 33–2)
14. INSTALL CONSOLE BOX SUB–ASSY REAR

PARKING BRAKE CABLE ASSY NO.3

3307H–01

COMPONENTS

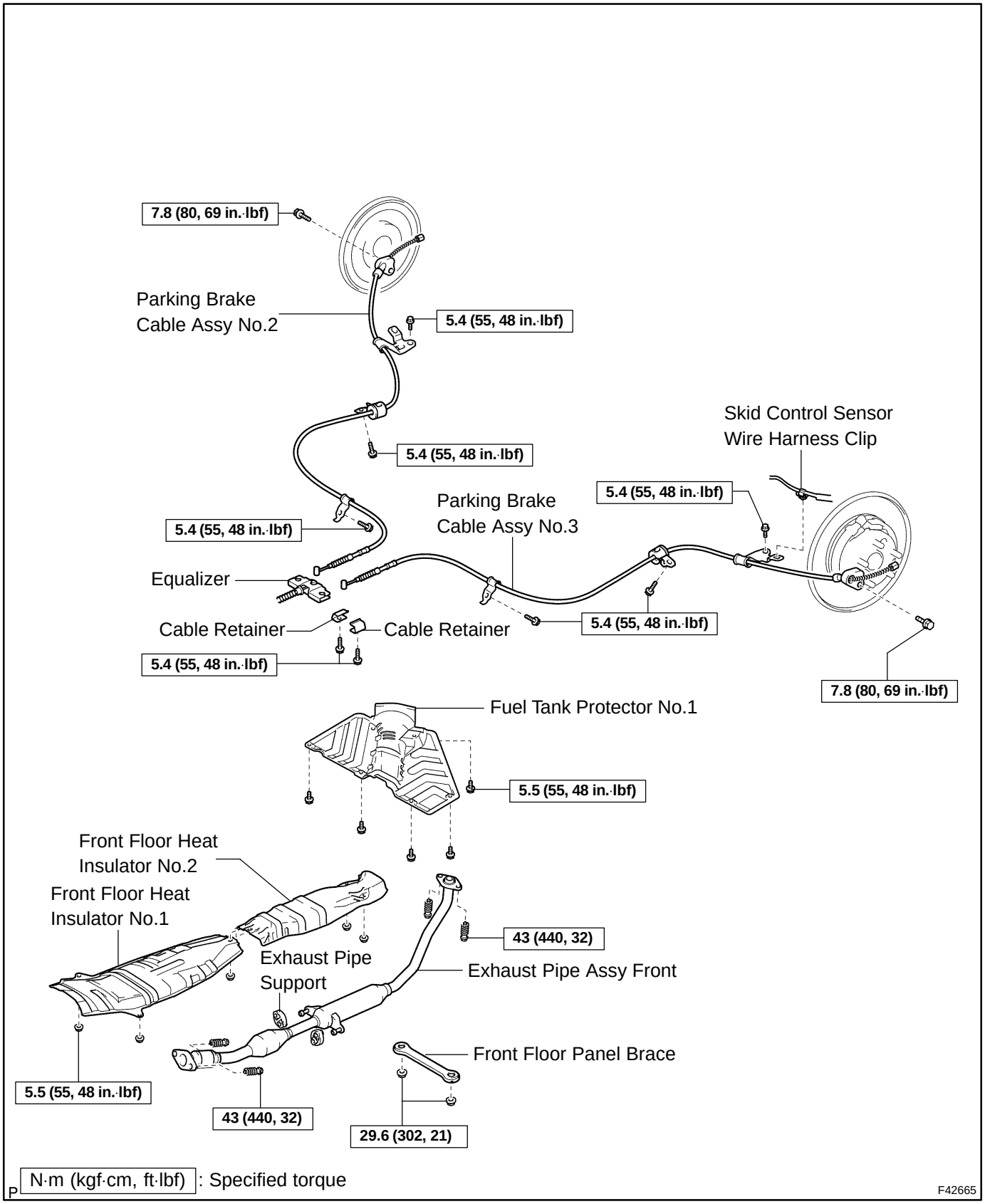

N·m (kgf·cm, ft·lbf) : Specified torque

P

F42665

33018–03

REPLACEMENT

HINT:

For parking brake cable assy No.2, perform the same procedure to the parking brake cable assy No.3.

1. REMOVE REAR WHEEL

2. REMOVE REAR BRAKE DRUM SUB–ASSY (See page 32–31)

3. REMOVE REAR BRAKE AUTOMATIC ADJUST LEVER LH (See page 32–31)

4. REMOVE FRONT BRAKE SHOE (See page 32–31)

SST 09718–00010

5. REMOVE PARKING BRAKE SHOE STRUT SET LH (See page 32–31)

6. REMOVE REAR BRAKE SHOE (See page 32–31)

SST 09718–00010

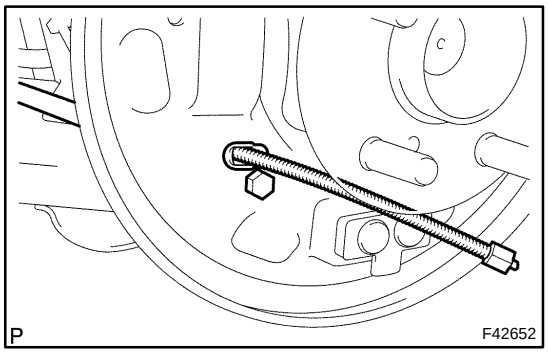

7. DISCONNECT PARKING BRAKE CABLE ASSY NO.3

(a) Remove the bolt, and disconnect the parking brake cable assy No.3 from the backing plate.

8. REMOVE EXHAUST PIPE ASSY FRONT (See page 15–2)

9. REMOVE FRONT FLOOR HEAT INSULATOR NO.1 (See page 33–7)

10. REMOVE FRONT FLOOR HEAT INSULATOR NO.2 (See page 33–7)

11. REMOVE FUEL TANK PROTECTOR NO.1

(a) Remove the 5 nuts and fuel tank protector No.1.

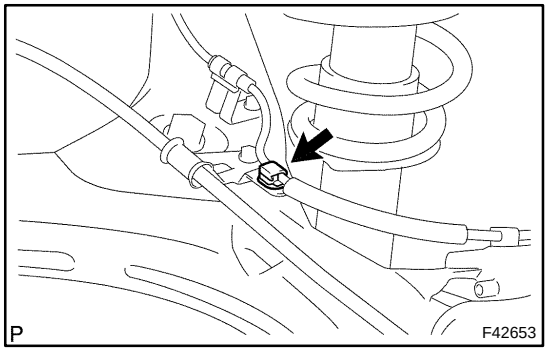

12. REMOVE PARKING BRAKE CABLE ASSY NO.3

(a) Using a clip remover, disconnect the skid control sensor wire harness clip from the clamp.

(b) Remove the 4 bolts and cable retainer from the body.

(c) Disconnect the parking brake cable assy No.3 from the equalizer, and remove the parking brake cable assy No.3.

13. INSTALL PARKING BRAKE CABLE ASSY NO.3

(a) Connect the parking brake cable assy No.3 to the equalizer.

(b) Install the parking brake cable assy No.3 with the 4 bolts and cable retainer.
Torque: 5.4 N·m (55 kgf·cm, 48 in.·lbf)

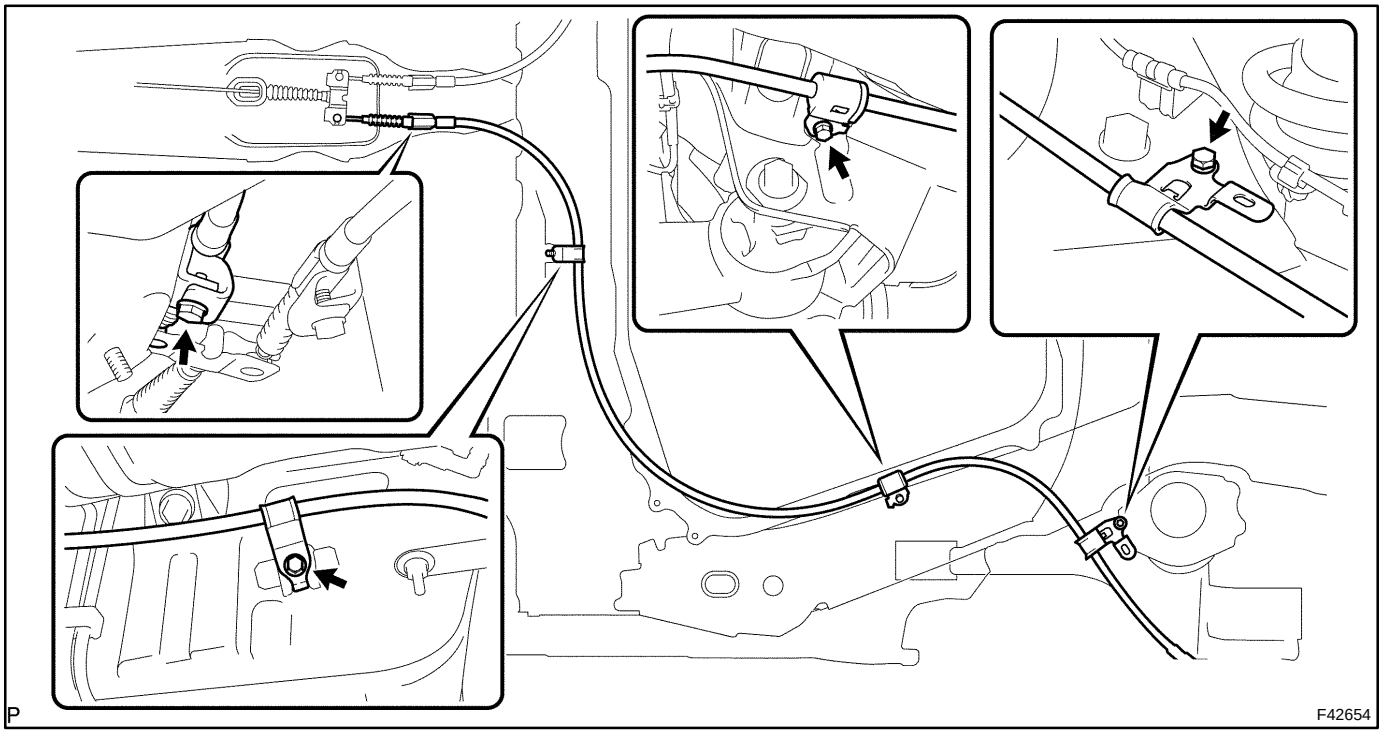

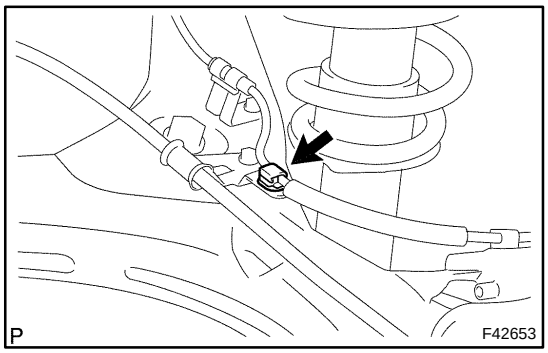

(c) Connect the skid control sensor wire harness clip to the clamp.

14. INSTALL FUEL TANK PROTECTOR NO.1

(a) Install the fuel tank protector No.1 with the 5 nuts.
Torque: 5.5 N·m (55 kgf·cm, 48 in.·lbf)

15. INSTALL FRONT FLOOR HEAT INSULATOR NO.2 (See page 33–7)
16. INSTALL FRONT FLOOR HEAT INSULATOR NO.1 (See page 33–7)
17. INSTALL EXHAUST PIPE ASSY FRONT (See page 15–2)

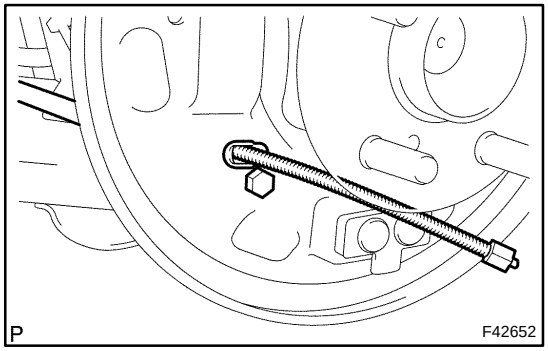

18. CONNECT PARKING BRAKE CABLE ASSY NO.3

(a) Connect the parking brake cable assy No.3 to the backing plate with the bolt.
Torque: 7.8 N·m (80 kgf·cm, 69 in.·lbf)

19. **APPLICATION HIGH TEMPERATURE GREASE (See page 32–31)**
20. **INSTALL REAR BRAKE SHOE (See page 32–31)**
    SST 09718–00010
21. **INSTALL PARKING BRAKE SHOE STRUT SET LH (See page 32–31)**
22. **INSTALL FRONT BRAKE SHOE (See page 32–31)**
    SST 09718–00010
23. **INSTALL REAR BRAKE AUTOMATIC ADJUST LEVER LH (See page 32–31)**
24. **CHECK REAR DRUM BRAKE INSTALLATION (See page 32–31)**
25. **INSTALL REAR BRAKE DRUM SUB–ASSY**
26. **ADJUST REAR DRUM BRAKE SHOE CLEARANCE (See page 32–31)**
27. **INSTALL REAR WHEEL**
    Torque: 103 N·m (1,050 kgf·cm, 76 ft·lbf)
28. **INSPECT PARKING BRAKE LEVER TRAVEL (See page 33–2)**
29. **ADJUST PARKING BRAKE LEVER TRAVEL (See page 33–2)**
30. **CHECK EXHAUST LEAKAGE**

PARKING BRAKE LEVER SUB–ASSY

3307D–01

COMPONENTS

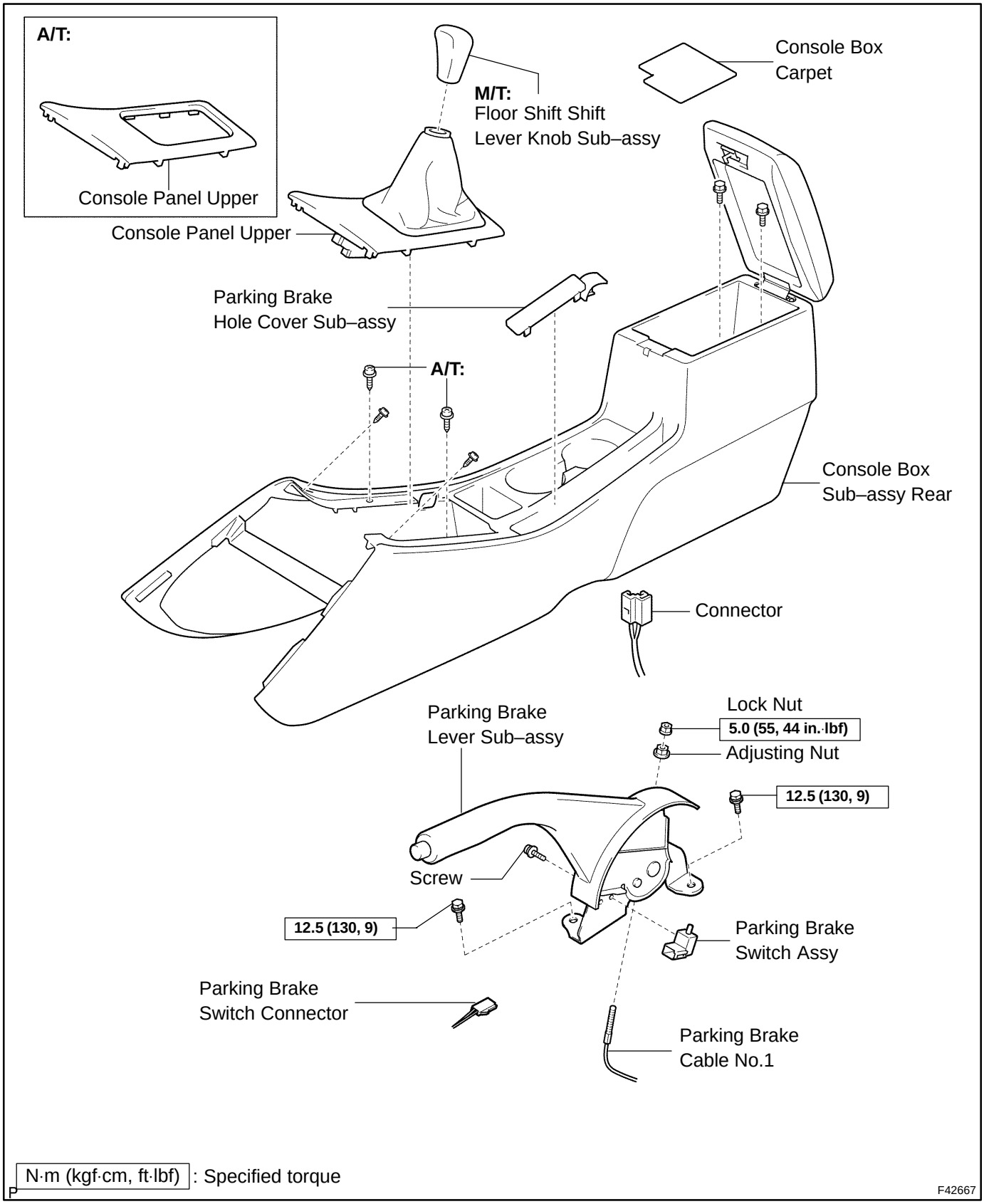

3307E–01

REPLACEMENT

1. REMOVE CONSOLE BOX SUB–ASSY REAR (See page 71–10)

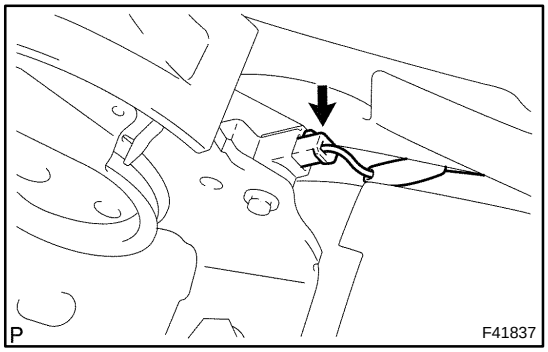

2. REMOVE PARKING BRAKE LEVER SUB–ASSY

(a) Disconnect the parking brake switch connector from the parking brake switch.

(b) Remove the lock nut and adjusting nut from the parking brake cable assy No.1.

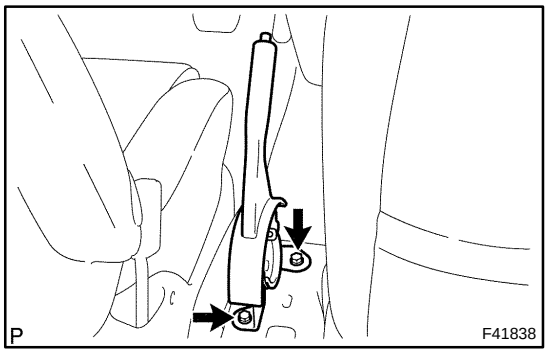

(c) Remove the 2 bolts.

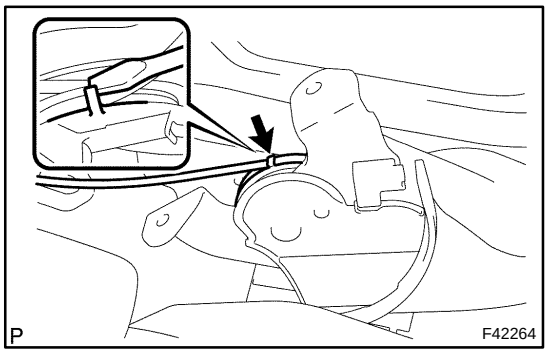

(d) Using a screwdriver, raise the pick on the parking brake lever, and remove the parking brake cable assy No.1 from the parking brake lever.

(e) Remove the parking brake lever from the body.

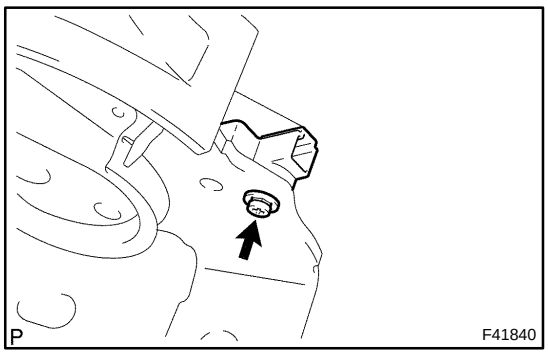

3. REMOVE PARKING BRAKE SWITCH ASSY

(a) Remove the screw and parking brake switch assy.

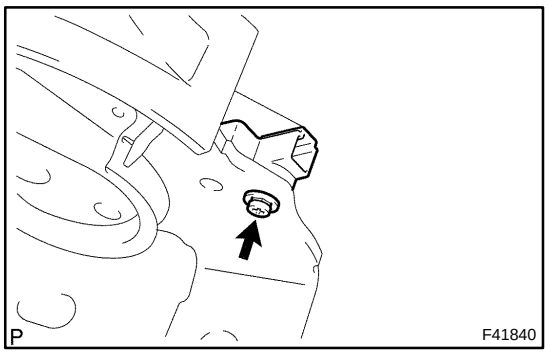

4. INSTALL PARKING BRAKE SWITCH ASSY

(a) Install the parking brake switch to the parking brake lever sub–assy with the screw.

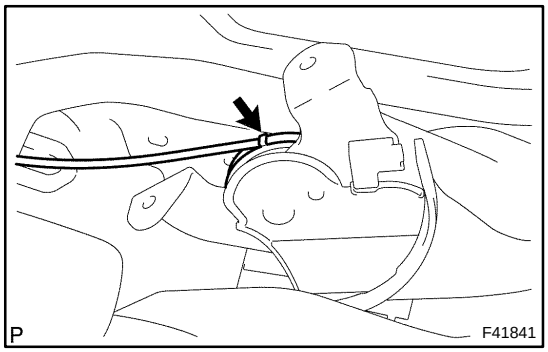

5. INSTALL PARKING BRAKE LEVER SUB–ASSY

(a) Install the parking brake cable assy No.1 to the parking brake lever, temporarily tighten the adjusting nut and lock nut.

(b) Using a screwdriver, fix the parking brake cable No.1 to the pick.

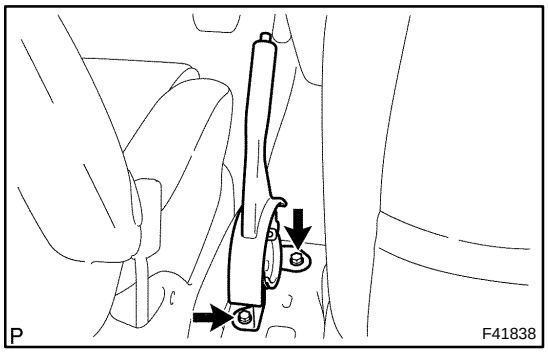

(c) Install the parking brake lever with the 2 bolts.
Torque: 12.5 N·m (130 kgf·cm, 9 ft·lbf)

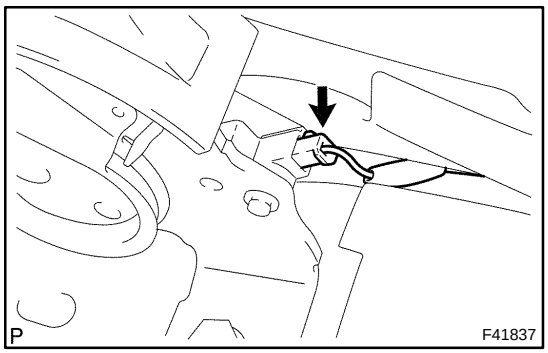

(d) Connect the parking brake switch connector to the parking brake switch.

6. INSPECT PARKING BRAKE LEVER TRAVEL (See page 33–2)
7. ADJUST PARKING BRAKE LEVER TRAVEL (See page 33–2)
8. INSTALL CONSOLE BOX SUB–ASSY REAR

PARKING BRAKE SYSTEM

3307B–01

PROBLEM SYMPTOMS TABLE

Use the table below to help you find the cause of the problem. The numbers indicate the probability of the problems in descending order. Check each part in order. If necessary, replace these parts.

Symptom	Suspect Area	See page
Brake drag	1. Parking brake lever travel (Out of adjustment)	33–2
	2. Parking brake wire (Sticking)	33–7 33–10
	3. Parking brake shoe clearance (Out of adjustment)	32–31
	4. Parking brake shoe lining (Cracked or distorted)	32–31
	5. Tension or return spring (Damaged)	32–31

400LI–01

ADJUSTMENT

1. INSPECT PARK/NEUTRAL POSITION SWITCH ASSY

(a) Apply the parking brake and turn the ignition switch ON.

(b) Depress the brake pedal and check that the engine starts only when the shift lever is set in N or P position and it does not start in the other position.

(c) Check that the back–up light comes on and the reverse warning buzzer sounds only when the shift lever is set in R position and these do not function in the other positions.

If a failure is found, check the park/ neutral position switch for continuity.

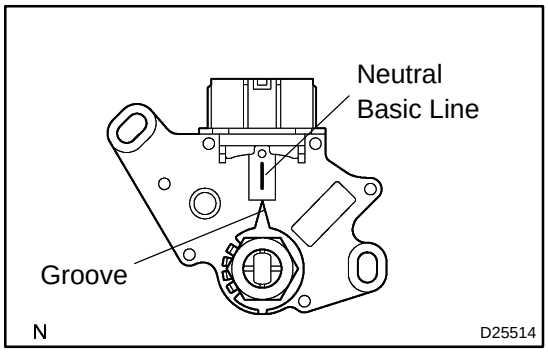

2. ADJUST PARK/NEUTRAL POSITION SWITCH ASSY

(a) Loosen the 2 bolts of park/ neutral position switch and set the shift lever to the N position.

(b) Align the groove and neutral basic line.

(c) Hold the switch in position and tighten the 2 bolts.
Torque: 5.5 N·m (56 kgf·cm, 49 in.·lbf)

(d) After adjustment, perform the inspection described in step 1.

PARK/NEUTRAL POSITION SWITCH ASSY (ATM)

400LH–01

REPLACEMENT

1. REMOVE BATTERY

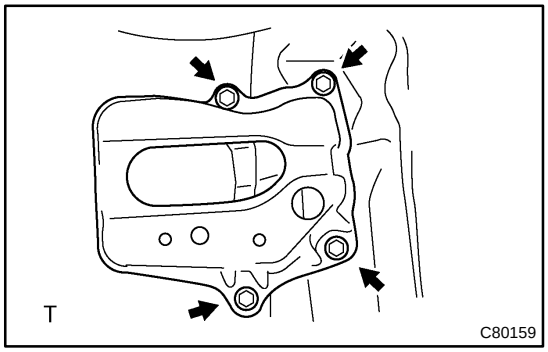

2. REMOVE BATTERY CARRIER

(a) Remove the 4 bolts and battery carrier.

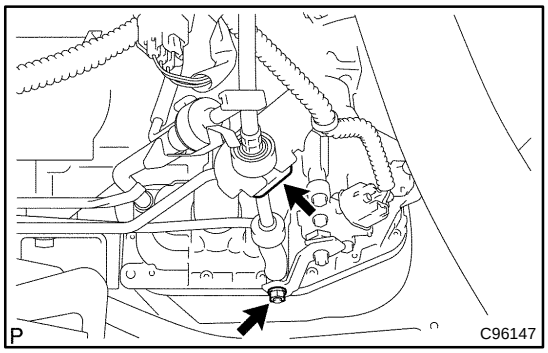

3. DISCONNECT FLOOR SHIFT CABLE TRANSMISSION CONTROL SHIFT

(a) Remove the nut from the control shift lever.
(b) Disconnect the control cable from the control shaft lever.
(c) Remove the clip and disconnect the control cable from the control cable bracket.

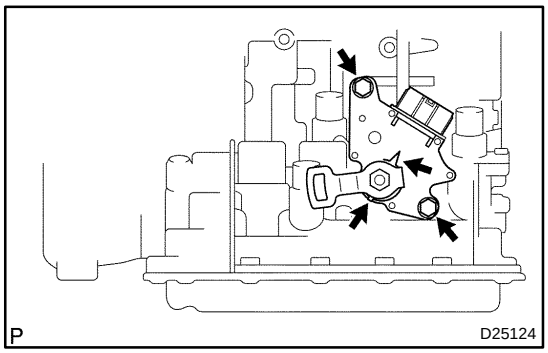

4. REMOVE PARK/NEUTRAL POSITION SWITCH ASSY

(a) Disconnect the park/neutral position switch connector.
(b) Remove the nut, washer and control shift lever.
(c) Pry out the lock plate and remove the manual valve shaft nut.
(d) Remove the 2 bolts and pull out the park/neutral position switch.

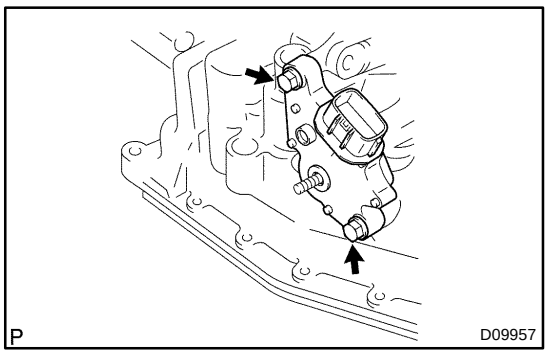

5. INSTALL PARK/NEUTRAL POSITION SWITCH ASSY

(a) Install the park/neutral position switch to the manual valve shaft.
(b) Temporarily install the 2 bolts.
(c) Place a new lock plate and tighten the nut.
Torque: 5.5 N·m (56 kgf·cm, 49 in.·lbf)
(d) Temporarily install the control shaft lever.

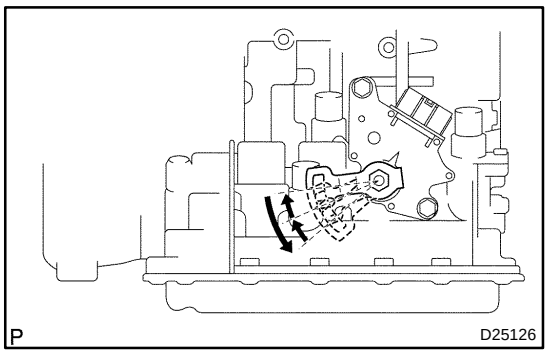

(e) Turn the lever counterclockwise until it stops, then turn it clockwise 2 notches.
(f) Remove the control shaft lever.

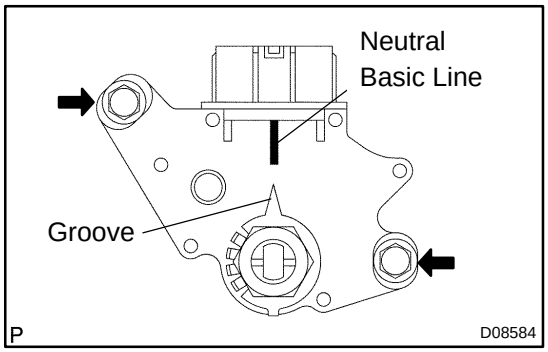

(g) Align the groove with neutral basic line.
(h) Hold the switch in position and tighten the 2 bolts.
Torque: 5.5 N·m (56 kgf·cm, 49 in.·lbf)

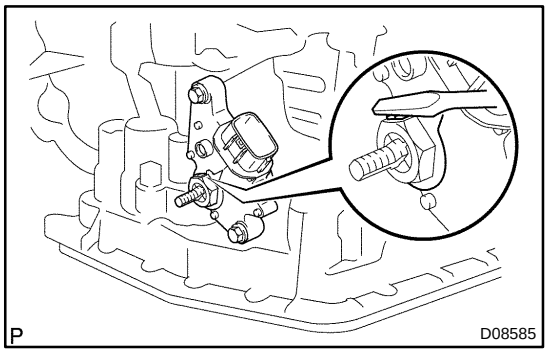

(i) Using a screwdriver, stake the nut with the lock plate.

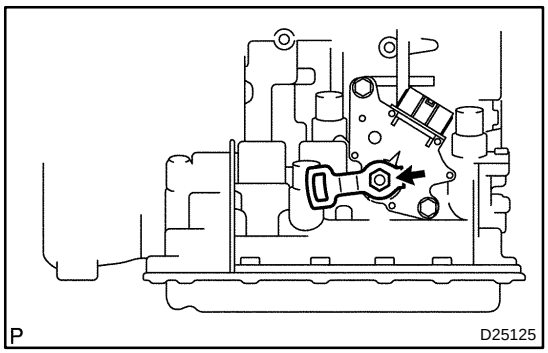

(j) Install the control shaft lever, washer and nut.
Torque: 12.5 N·m (127 kgf·cm, 9 ft·lbf)
(k) Connect the park/neutral position switch connector.

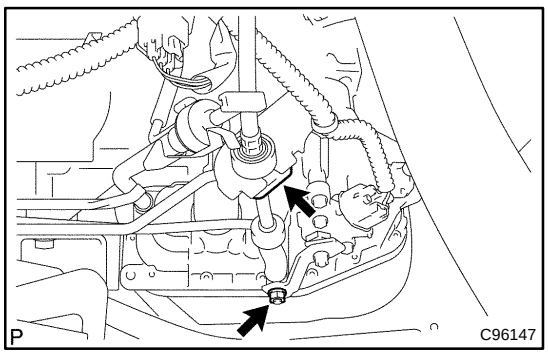

6. INSTALL FLOOR SHIFT CABLE TRANSMISSION CONTROL SHIFT

(a) Temporarily install the control cable to the control shaft lever with nut.
(b) Install the control cable and clip to the bracket.

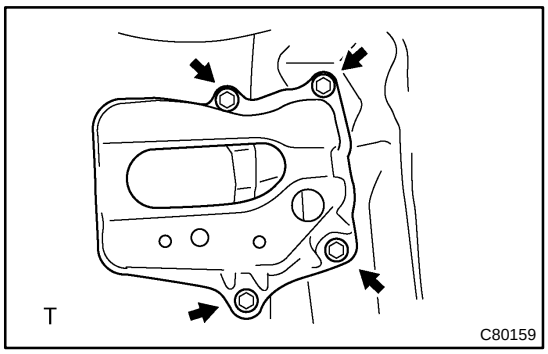

7. INSTALL BATTERY CARRIER

(a) Install the battery carrier and 4 bolts.
Torque: 13 N·m (132 kgf·cm, 10 ft·lbf)

8. ADJUST SHIFT LEVER POSITION (See page 40–44)

9. INSPECT SHIFT LEVER POSITION (See page 40–44)

10. INSPECT PARK/NEUTRAL POSITION SWITCH ASSY (See page 40–6)

AUTOMATIC TRANSAXLE ASSY (ATM)

COMPONENTS

400LJ–01

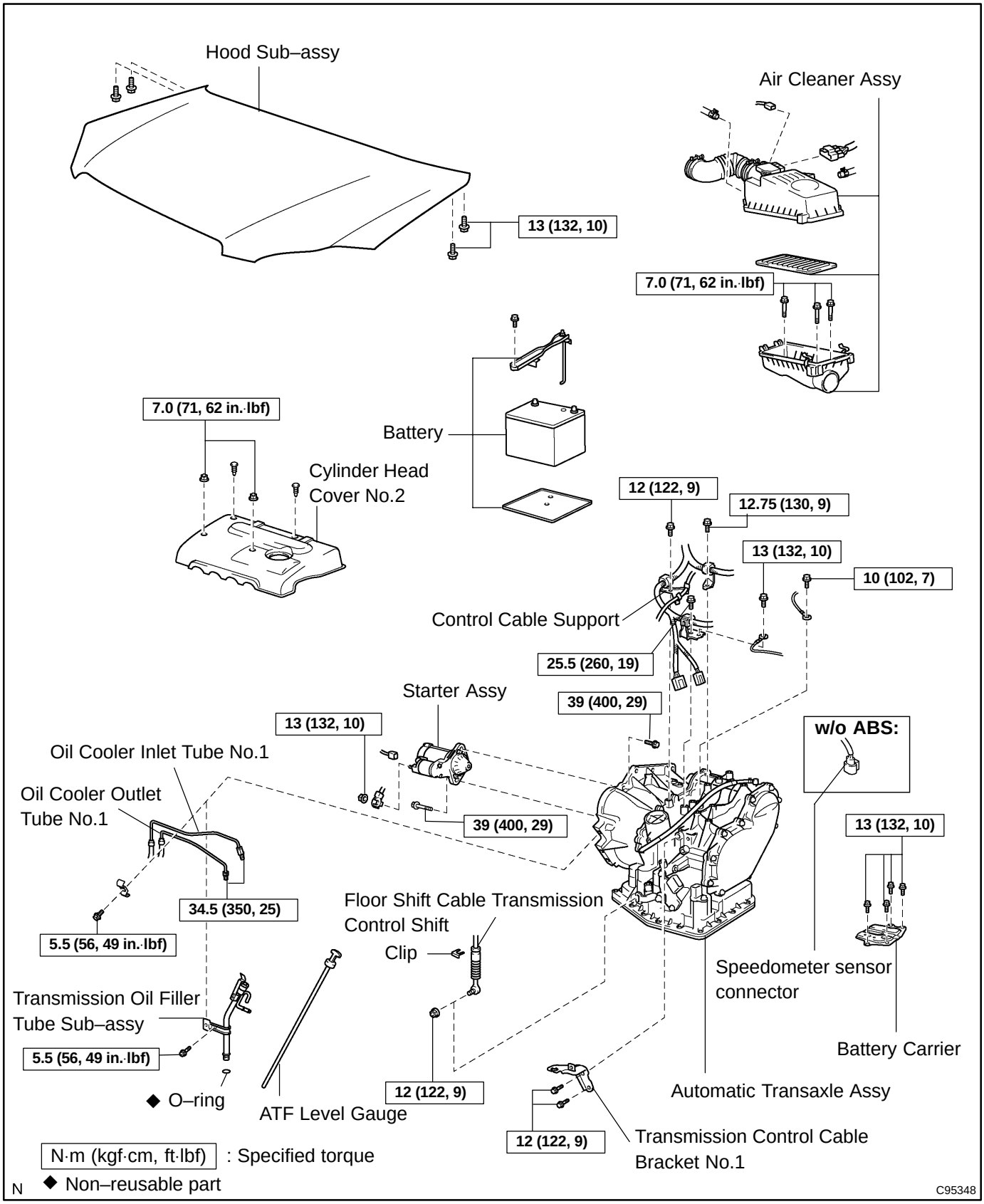

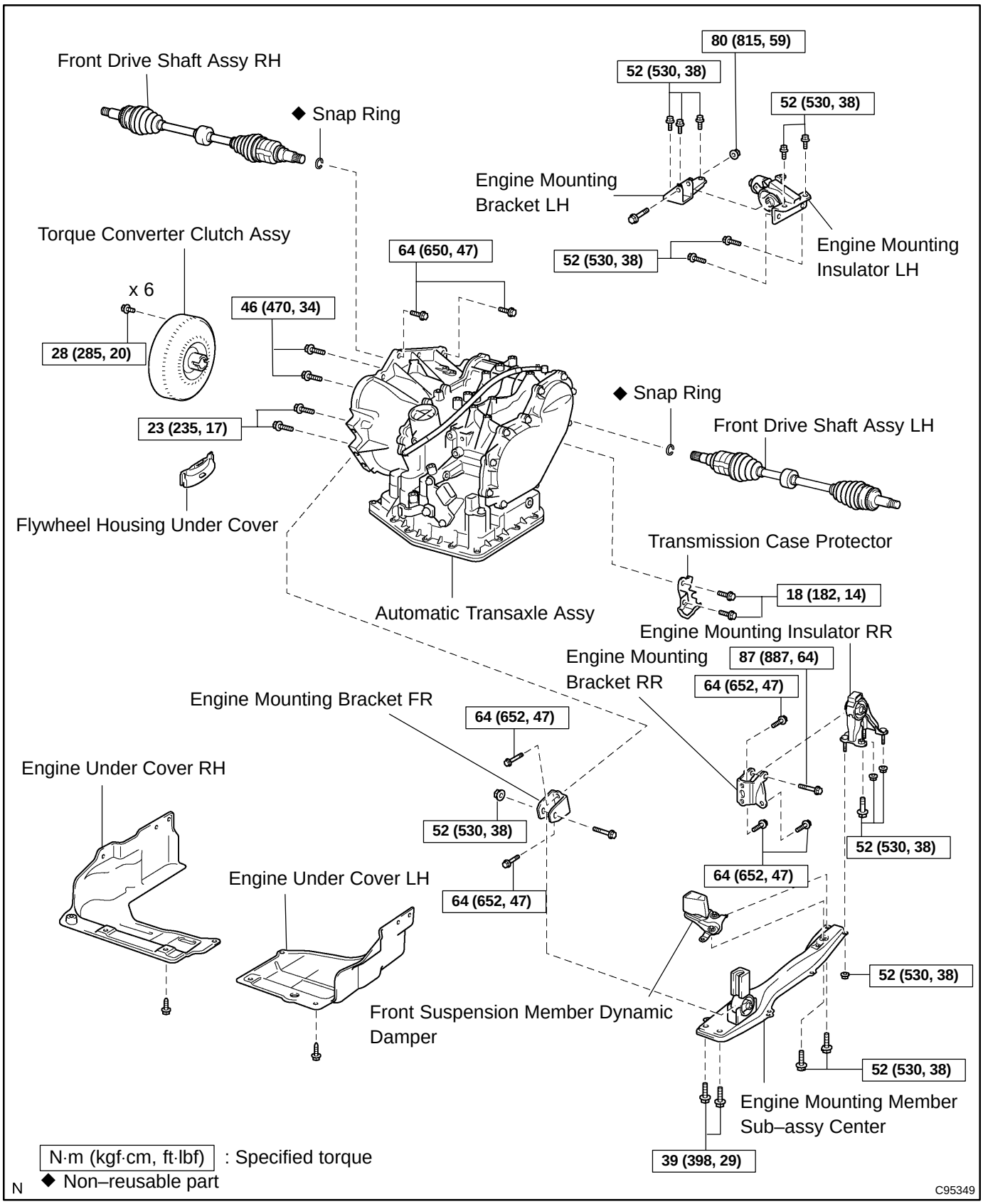
Front Drive Shaft Assy RH
◆ Snap Ring
80 (815, 59)
52 (530, 38)
52 (530, 38)
Engine Mounting Bracket LH
52 (530, 38)
Engine Mounting Insulator LH
Torque Converter Clutch Assy
x 6
28 (285, 20)
64 (650, 47)
46 (470, 34)
23 (235, 17)
Flywheel Housing Under Cover
Automatic Transaxle Assy
◆ Snap Ring
Front Drive Shaft Assy LH
Transmission Case Protector
18 (182, 14)
Engine Mounting Insulator RR
Engine Mounting Bracket RR
87 (887, 64)
64 (652, 47)
Engine Mounting Bracket FR
64 (652, 47)
Engine Under Cover RH
52 (530, 38)
52 (530, 38)
Engine Under Cover LH
64 (652, 47)
64 (652, 47)
52 (530, 38)
Front Suspension Member Dynamic Damper
52 (530, 38)
Engine Mounting Member Sub–assy Center
39 (398, 29)
N·m (kgf·cm, ft·lbf) : Specified torque
◆ Non–reusable part
N
C95349

400LK–02

REPLACEMENT

1. REMOVE HOOD SUB–ASSY

2. REMOVE CYLINDER HEAD COVER NO.2

3. REMOVE BATTERY

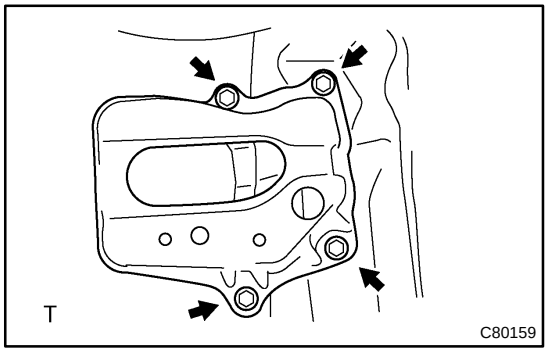

4. REMOVE BATTERY CARRIER

(a) Remove the 4 bolts and battery carrier.

5. REMOVE AIR CLEANER ASSEMBLY WITH HOSE

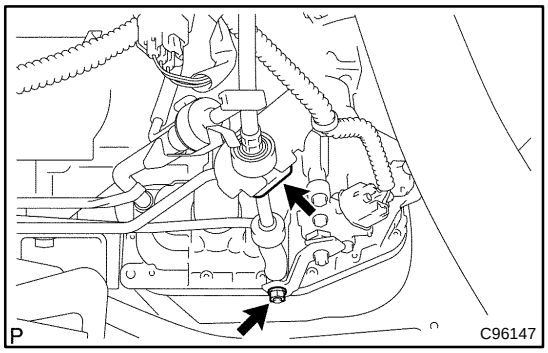

6. REMOVE FLOOR SHIFT CABLE TRANSMISSION CONTROL SHIFT

(a) Remove the nut from the control shaft lever.

(b) Disconnect the control cable from the control shaft lever.

(c) Remove the clip and disconnect the control cable from the control cable bracket.

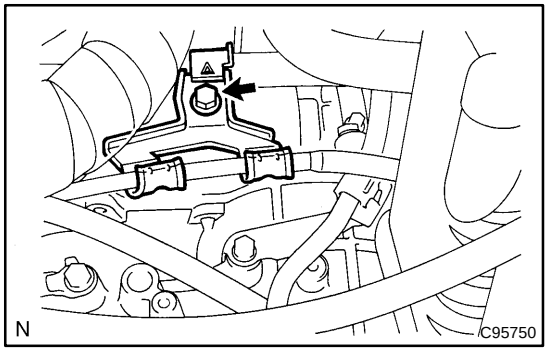

7. REMOVE TRANSMISSION CONTROL CABLE SUPPORT

(a) Disconnect the wire harness clamp and control cable from the control cable support.

(b) Remove the bolt and control cable support.

8. REMOVE TRANSMISSION CONTROL CABLE BRACKET NO.1

(a) Remove the 2 bolts and control cable bracket.

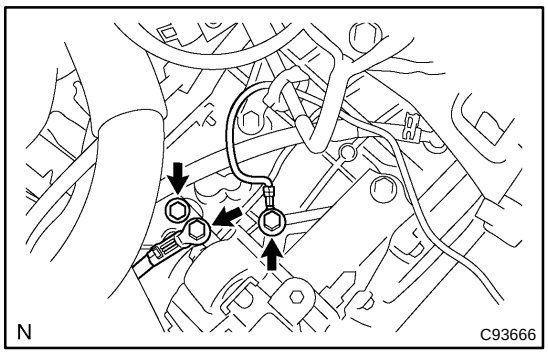

9. DISCONNECT WIRE HARNESS

(a) Remove the 2 bolts and disconnect the 2 wire harnesses.

(b) Remove the bolt and disconnect the wire harness clamp bracket.

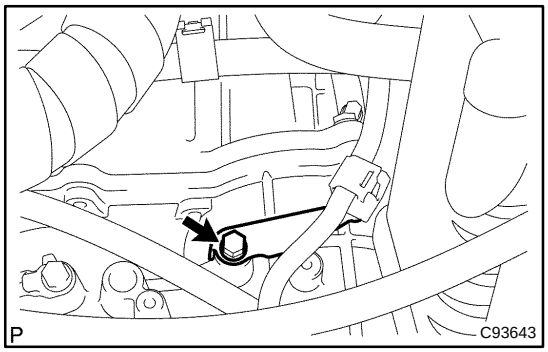

(c) Remove the bolt and disconnect the wire harness clamp bracket.

10. DISCONNECT CONNECTOR

(a) Disconnect the transmission wire connector.

(b) Disconnect the park/neutral position switch connector.

(c) w/o ABS:
Disconnect the speedometer sensor connector.

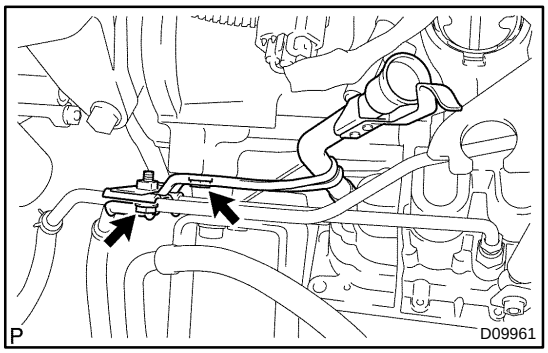

11. REMOVE TRANSMISSION OIL FILLER TUBE SUB–ASSY

(a) Remove the ATF lever gauge.

(b) Remove the 2 bolts, oil cooler tube clamp and oil filler tube.

(c) Remove the O–ring from the oil filler tube.

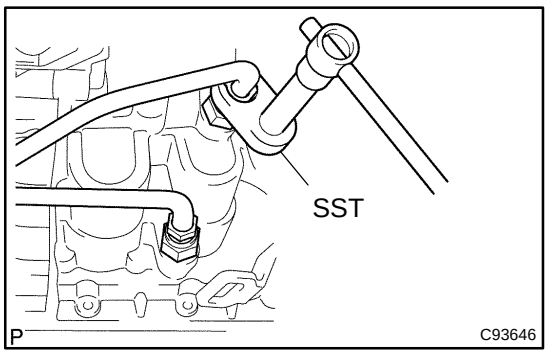

12. DISCONNECT OIL COOLER INLET TUBE NO.1

(a) Using SST, disconnect the oil cooler inlet tube No. 1.
SST 09023–12700

13. DISCONNECT OIL COOLER OUTLET TUBE NO.1

(a) Using SST, disconnect the oil cooler outlet tube No. 1.
SST 09023–12700

14. DISCONNECT OXYGEN SENSOR CONNECTOR

(a) Remove the foot rest.
(b) Pull up the floor carpet.
(c) Disconnect the oxygen sensor connector.

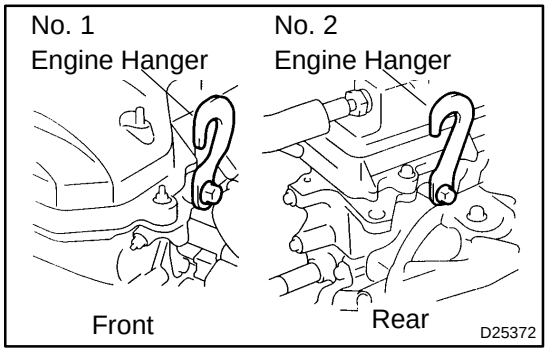

15. SUSPEND ENGINE ASSY

(a) Disconnect the 2 PCV hoses.
(b) Install the No.1 and No.2 engine hangers in the correct direction.
Parts No.:
No.1 engine hanger: 12281–22021
No.2 engine hanger: 12281–15040
Bolt: 91512–B1016
Torque: 38 N·m (387 kgf·cm, 28 ft·lbf)
(c) Attach the engine chain hoist to the engine hangers.

CAUTION:
Do not attempt to hang the engine by hooking the chain to any other parts.

16. REMOVE FRONT WHEELS
17. REMOVE ENGINE UNDER COVER RH
18. REMOVE ENGINE UNDER COVER LH
19. DRAIN AUTOMATIC TRANSAXLE FLUID

(a) Remove the drain plug and gasket, and drain ATF.
(b) Install a new gasket and drain plug.
Torque: 17.5 N·m (178 kgf·cm, 13 ft·lbf)

20. REMOVE EXHAUST PIPE ASSY FRONT (See page 15–2)
21. REMOVE FRONT DRIVE SHAFT ASSY RH (See page 30–6)
SST 09520–01010, 09520–24010 (09520–32040)
22. REMOVE FRONT DRIVE SHAFT ASSY LH (See page 30–6)
SST 09520–01010, 09520–24010 (09520–32040)
23. REMOVE AUTOMATIC TRANSMISSION CASE PROTECTOR

(a) Remove the 2 bolts and case protector.

24. REMOVE STARTER ASSY

(a) Remove the nut and disconnect the starter wire.
(b) Disconnect the connector.
(c) Remove the 2 bolts and starter.

25. SUPPORT AUTOMATIC TRANSAXLE ASSY

(a) Support the automatic transaxle with a transmission jack.

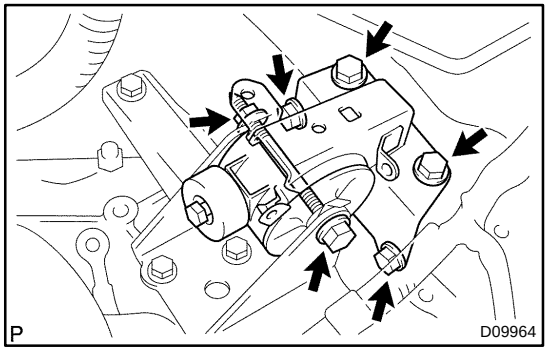

26. REMOVE TRANSVERSE ENGINE ENGINE MOUNTING INSULATOR

(a) Remove the 5 bolts, nut and engine mounting insulator LH.

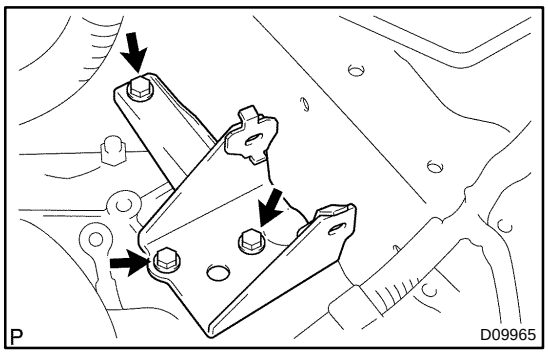

27. REMOVE TRANSVERSE ENGINE ENGINE MOUNTING BRACKET

(a) Remove the 3 bolts and engine mounting bracket LH.

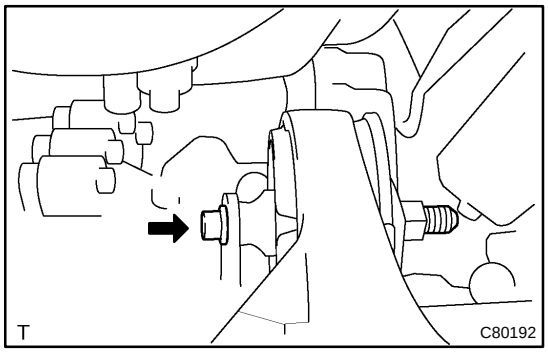

28. REMOVE TRANSVERSE ENGINE ENGINE MOUNTING INSULATOR

(a) Remove the bolt from the engine mounting bracket RR.

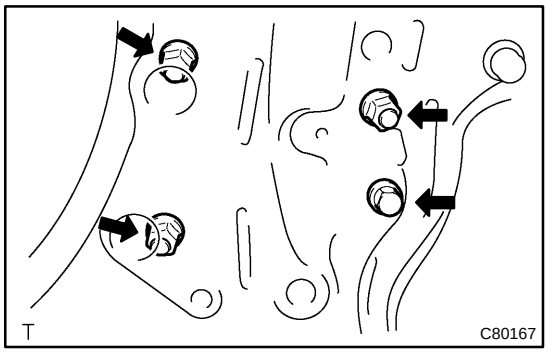

(b) Remove the 3 nuts, bolt and engine mounting insulator RR from the suspension member.

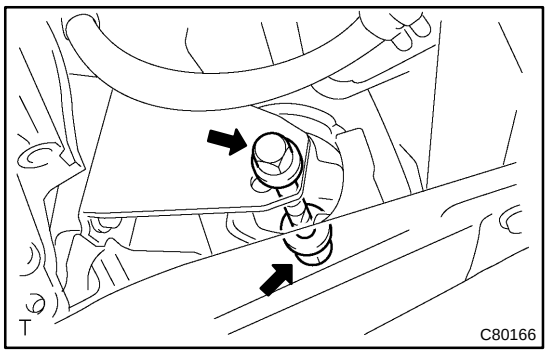

29. REMOVE TRANSVERSE ENGINE ENGINE MOUNTING INSULATOR

(a) Remove the bolt and nut from the engine mounting bracket FR.

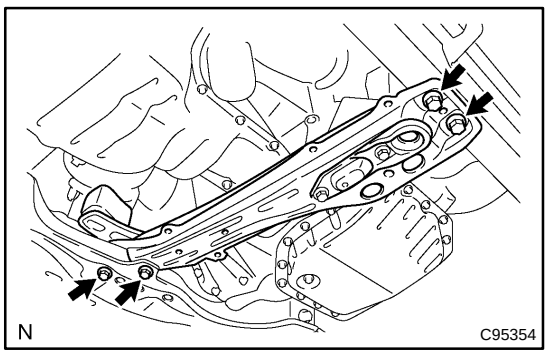

30. REMOVE ENGINE MOUNTING MEMBER SUB–ASSY CENTER

(a) Remove the 4 bolts, dynamic damper and member sub–assy center with engine mounting insulator FR.

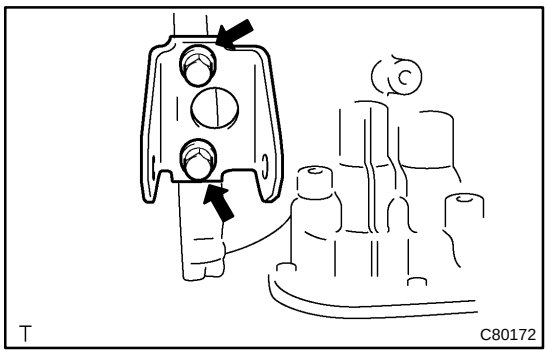

31. REMOVE TRANSVERSE ENGINE ENGINE MOUNTING BRACKET

(a) Remove the 2 bolts and engine mounting bracket FR.

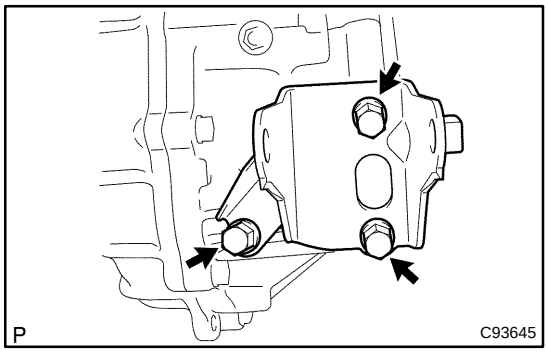

32. REMOVE TRANSVERSE ENGINE ENGINE MOUNTING BRACKET

(a) Remove the 3 bolts and engine mounting bracket RR.

33. REMOVE FLYWHEEL HOUSING UNDER COVER

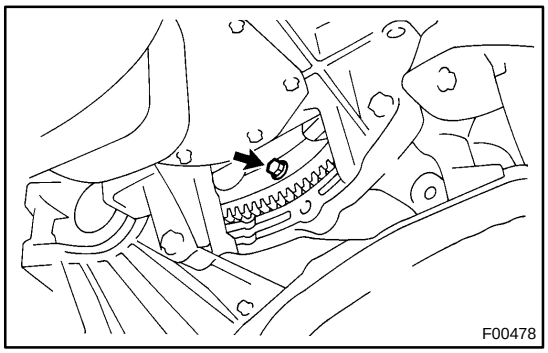

34. REMOVE AUTOMATIC TRANSAXLE ASSY

(a) Turn the crankshaft to gain access and remove the 6 bolts while holding the crankshaft pulley bolt with a wrench.

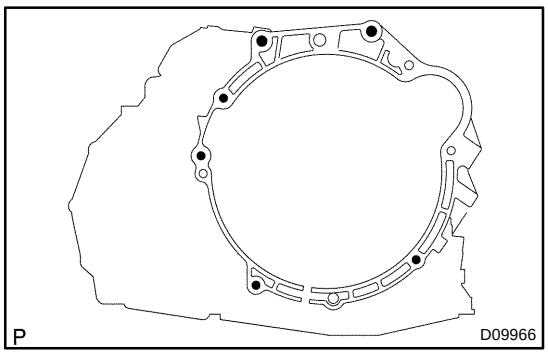

(b) Remove the 6 bolts.

(c) Separate and remove the automatic transaxle.

35. REMOVE TORQUE CONVERTER CLUTCH ASSY

36. INSPECT TORQUE CONVERTER CLUTCH ASSY (See page 40–20)

SST 09350–32014 (09351–32010, 09351–32020)

37. INSTALL TORQUE CONVERTER CLUTCH ASSY

(a) Install the torque converter clutch to the automatic transaxle.

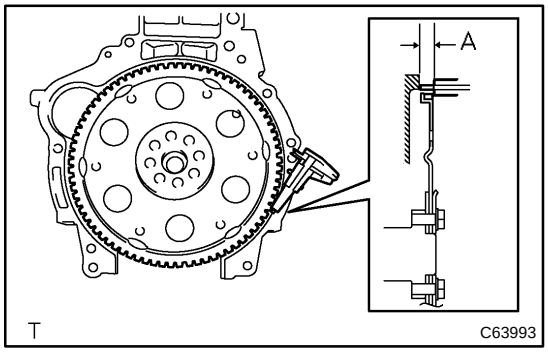

(b) Using vernier calipers, measure the dimension ”A” between the transaxle fitting part and the converter fitting part of the drive plate.

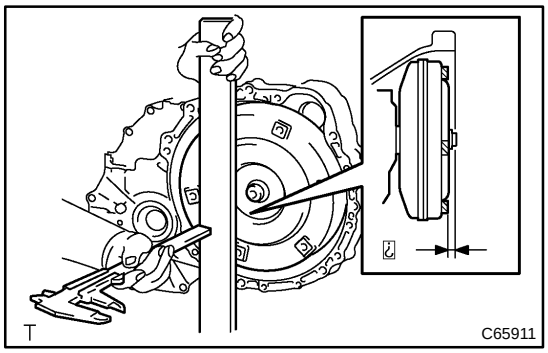

(c) Using vernier calipers and a straight edge, measure the dimension ”B” shown in the illustration and check that ”B” is greater than ”A” measured in (b).

Standard: A + 1 mm or more

NOTICE:

Do not add the thickness of straight edge.

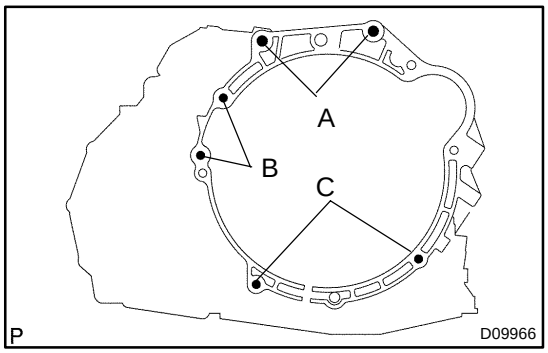

38. INSTALL AUTOMATIC TRANSAXLE ASSY

(a) Install the automatic transaxle and 6 bolts to the engine.

Torque:

Bolt A: 64 N·m (650 kgf·cm, 47 ft·lbf)

Bolt B: 46 N·m (470 kgf·cm, 34 ft·lbf)

Bolt C: 23 N·m (235 kgf·cm, 17 ft·lbf)

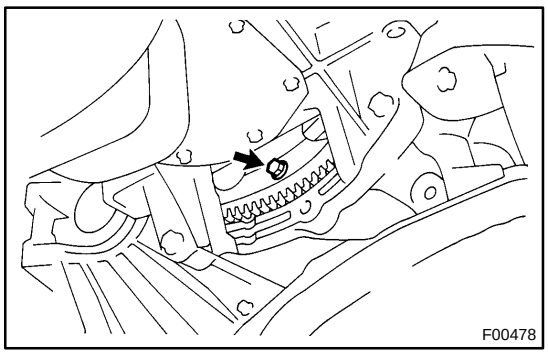

(b) Install the 6 torque converter mounting bolts.

Torque: 28 N·m (285 kgf·cm, 20 ft·lbf)

HINT:

First install yellowish green colored bolt and then the 5 bolts.

39. INSTALL FLYWHEEL HOUSING UNDER COVER

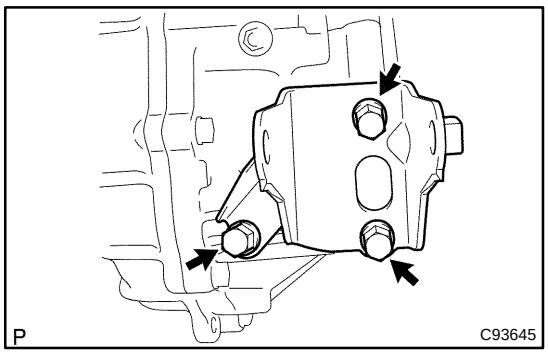

40. INSTALL TRANSVERSE ENGINE ENGINE MOUNTING BRACKET

(a) Install the engine mounting bracket RR and 3 bolts to the automatic transaxle.
Torque: 64 N·m (652 kgf·cm, 47 ft·lbf)

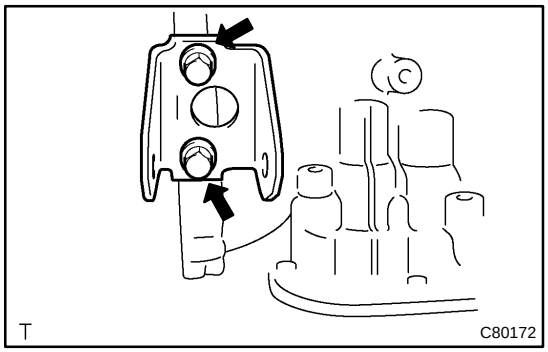

41. INSTALL TRANSVERSE ENGINE ENGINE MOUNTING BRACKET

(a) Install the engine mounting bracket FR and 2 bolts to the automatic transaxle.
Torque: 64 N·m (652 kgf·cm, 47 ft·lbf)

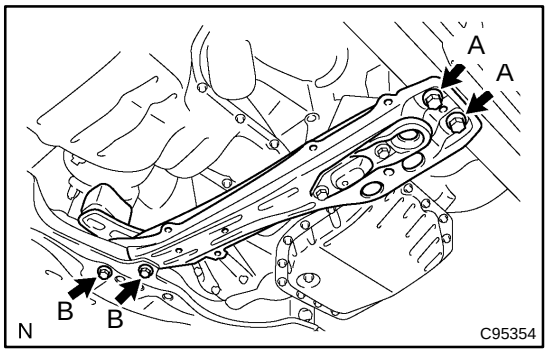

42. INSTALL ENGINE MOUNTING MEMBER SUB–ASSY CENTER

(a) Install the dynamic damper, member sub–assy center with engine mounting insulator FR and 4 bolts.
Torque:
Bolt A: 39 N·m (398 kgf·cm, 29 ft·lbf)
Bolt B: 52 N·m (530 kgf·cm, 38 ft·lbf)

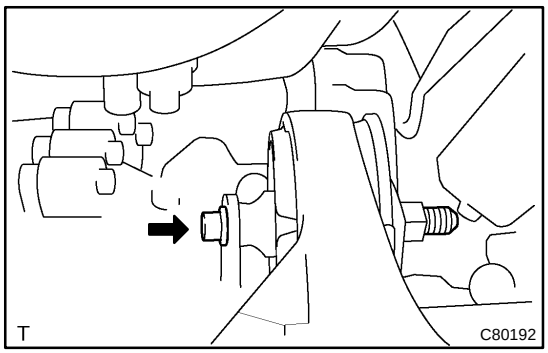

43. INSTALL TRANSVERSE ENGINE ENGINE MOUNTING INSULATOR

(a) Install the engine mounting insulator RR and bolt to the engine mounting bracket RR.
Torque: 87 N·m (887 kgf·cm, 64 ft·lbf)

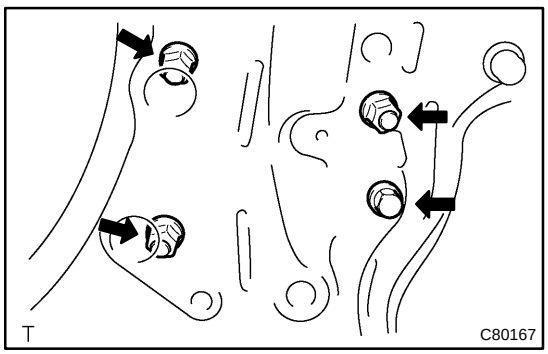

(b) Tighten the 3 nuts and bolt.
Torque: 52 N·m (530 kgf·cm, 38 ft·lbf)

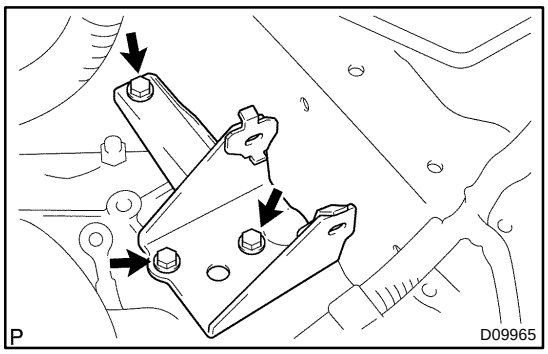

44. INSTALL TRANSVERSE ENGINE ENGINE MOUNTING BRACKET

(a) Install the engine mounting bracket LH and 3 bolts to the automatic transaxle.
Torque: 52 N·m (530 kgf·cm, 38 ft·lbf)

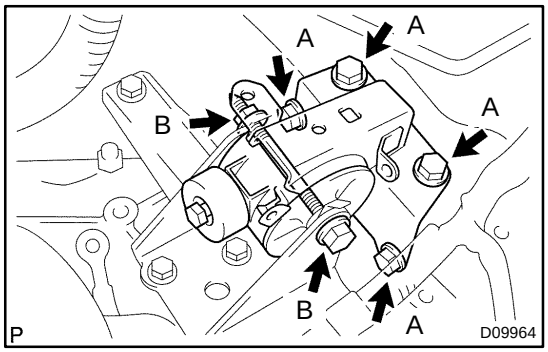

45. INSTALL TRANSVERSE ENGINE ENGINE MOUNTING INSULATOR

(a) Install the engine mounting insulator LH, 5 bolts and nut.
Torque:
Bolt A: 52 N·m (530 kgf·cm, 38 ft·lbf)
Bolt B: 80 N·m (815 kgf·cm, 59 ft·lbf)
Nut B: 80 N·m (815 kgf·cm, 59 ft·lbf)

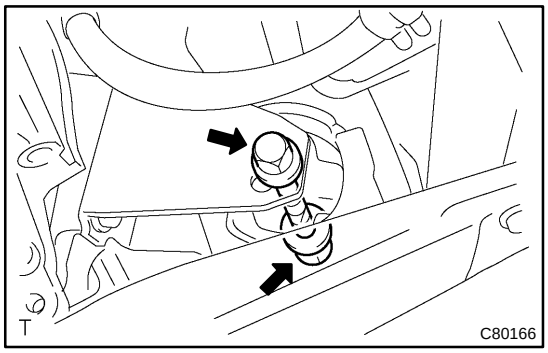

46. INSTALL TRANSVERSE ENGINE ENGINE MOUNTING INSULATOR

(a) Install the bolt and nut to the engine mounting bracket FR.
Torque: 52 N·m (530 kgf·cm, 38 ft·lbf)

47. INSTALL STARTER ASSY

(a) Install the starter and 2 bolts.
Torque: 39 N·m (400 kgf·cm, 29 ft·lbf)

(b) Connect the connecter.

(c) Install the starter wire and nut.
Torque: 13 N·m (132 kgf·cm, 10 ft·lbf)

48. INSTALL AUTOMATIC TRANSMISSION CASE PROTECTOR

(a) Install the case protector with the 2 bolts.
Torque: 18 N·m (182 kgf·cm, 14 ft·lbf)

49. INSTALL FRONT DRIVE SHAFT ASSY LH (See page 30–6)

50. INSTALL FRONT DRIVE SHAFT ASSY RH (See page 30–6)

51. INSTALL EXHAUST PIPE ASSY FRONT (See page 15–2)

52. INSTALL ENGINE UNDER COVER LH

53. INSTALL ENGINE UNDER COVER RH

54. INSTALL FRONT WHEELS
Torque: 103 N·m (1,050 kgf·cm, 76 ft·lbf)

55. INSTALL OXYGEN SENSOR CONNECTOR

(a) Connect the oxygen sensor connector.

(b) Install the floor carpet and foot rest.

56. INSTALL TRANSMISSION OIL FILLER TUBE SUB–ASSY

(a) Temporarily install the oil cooler outlet tube No. 1.
(b) Temporarily install the oil cooler inlet tube No. 1.
(c) Coat a new O–ring with ATF, and install them to the oil filler tube.
(d) Install the oil filler tube to the automatic transaxle.

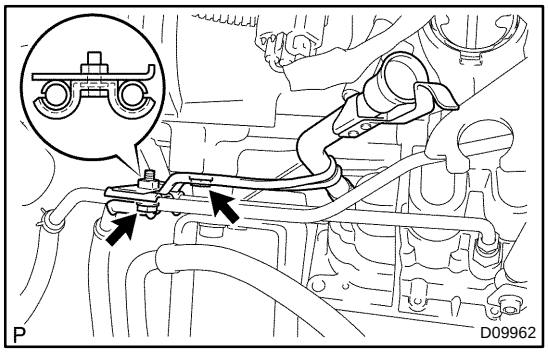

(e) Install the oil cooler tube clamp and 2 bolts.
Torque: 5.5 N·m (56 kgf·cm, 49 in.·lbf)
(f) Install the ATF lever gauge.

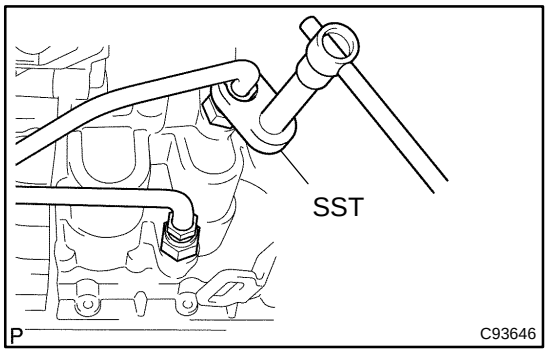

57. INSTALL OIL COOLER INLET TUBE NO.1

(a) Using SST, tighten the oil cooler inlet tube No. 1.
SST 09023–12700
Torque: 34.5 N·m (350 kgf·cm, 25 ft·lbf)

58. INSTALL OIL COOLER OUTLET TUBE NO.1

(a) Using SST, tighten the oil cooler outlet tube No. 1.
SST 09023–12700
Torque: 34.5 N·m (350 kgf·cm, 25 ft·lbf)

59. CONNECT CONNECTOR

(a) Connect the transmission wire connector.
(b) Connect the park/neutral position switch connector.
(c) w/o ABS:
Connect the speedometer sensor connector.

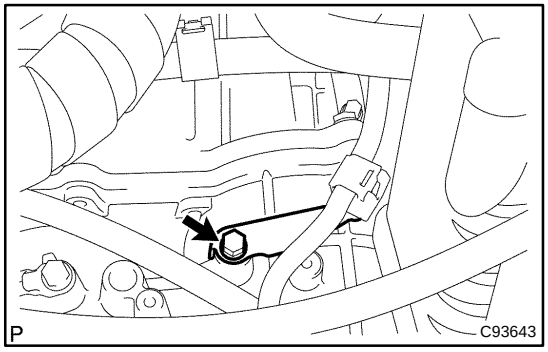

60. INSTALL WIRE HARNESS

(a) Install the wire harness clamp bracket and bolt.
Torque: 12.75 N·m (130 kgf·cm, 9 ft·lbf)

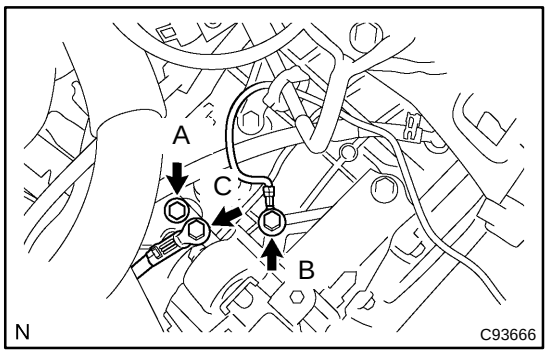

(b) Install the wire harness clamp bracket and 2 wire harnesses with the 3 bolts.
Torque:
Bolt A: 25.5 N·m (260 kgf·cm, 19 ft·lbf)
Bolt B: 10 N·m (102 kgf·cm, 7 ft·lbf)
Bolt C: 13 N·m (132 kgf·cm, 10 ft·lbf)

61. INSTALL TRANSMISSION CONTROL CABLE BRACKET NO.1

(a) Install the control cable bracket and 2 bolts.
Torque: 12 N·m (122 kgf·cm, 9 ft·lbf)

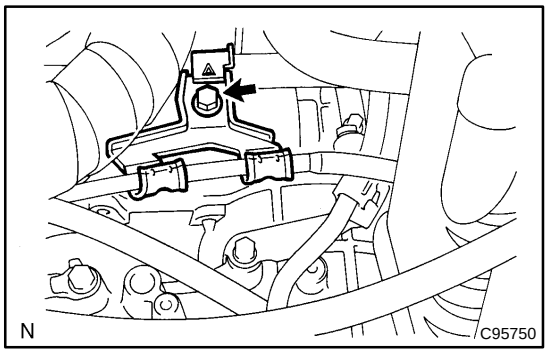

62. INSTALL TRANSMISSION CONTROL CABLE SUPPORT

(a) Install the control cable support and bolt.
Torque: 12 N·m (122 kgf·cm, 9 ft·lbf)

(b) Connect the control cable and wire harness to the control cable support.

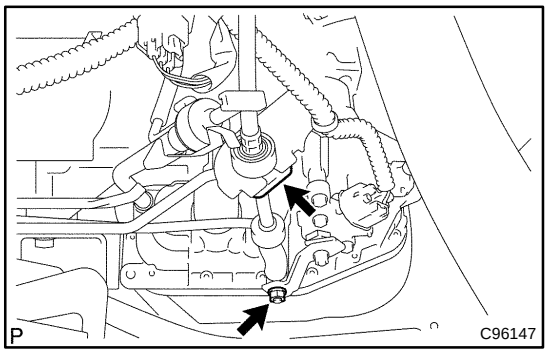

63. INSTALL FLOOR SHIFT CABLE TRANSMISSION CONTROL SHIFT

(a) Temporarily install the control cable to the control shaft lever with the nut.

(b) Install the control cable and clip to the bracket.

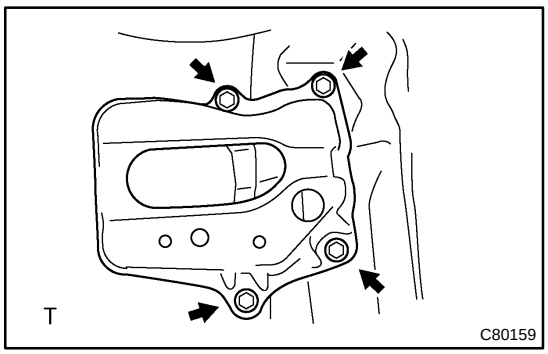

64. INSTALL BATTERY CARRIER

(a) Install the battery carrier and 4 bolts.
Torque: 13 N·m (132 kgf·cm, 10 ft·lbf)

65. INSTALL AIR CLEANER ASSEMBLY WITH HOSE
Torque: 7.0 N·m (71 kgf·cm, 62 in.·lbf)

66. INSTALL CYLINDER HEAD COVER NO.2
Torque: 7.0 N·m (71 kgf·cm, 62 in.·lbf)

67. INSTALL HOOD SUB–ASSY
Torque: 13 N·m (130 kgf·cm, 10 ft·lbf)
68. INSPECT HOOD SUB–ASSY (See page 75–1)
69. ADJUST HOOD SUB–ASSY (See page 75–1)
70. ADD AUTOMATIC TRANSAXLE FLUID
71. INSPECT AUTOMATIC TRANSAXLE FLUID (See page 40–2)
72. ADJUST SHIFT LEVER POSITION (See page 40–44)
73. INSPECT SHIFT LEVER POSITION (See page 40–44)
74. INSPECT FRONT WHEEL ARIMENT (See page 26–5)
75. CHECK ABS SPEED SENSOR SIGNAL (W/ ABS) (See page 05–297)

400LS–01

ADJUSTMENT

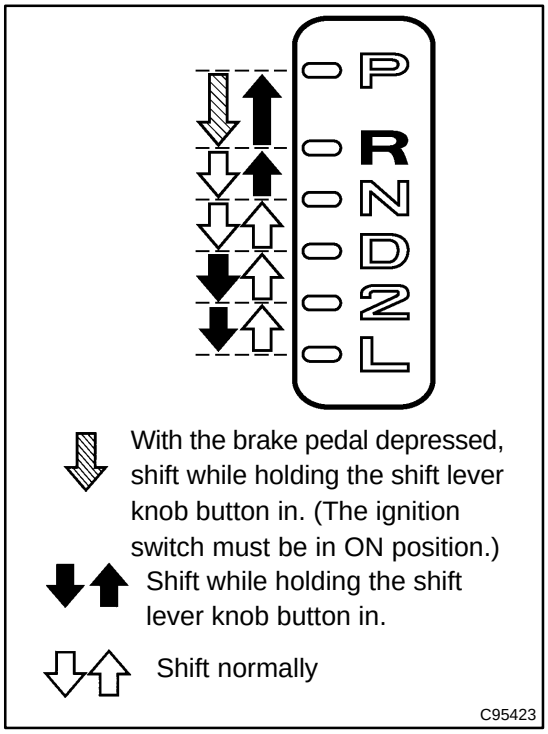

1. INSPECT SHIFT LEVER POSITION

(a) When shifting the shift lever to each position, make sure that it moves smoothly, and the position indicator displays correctly.

Positions which can be shifted without pressing the shift lever knob button

R → N → D, L → 2 → D → N

Positions which can be operated only while pressing the shift lever knob button

D → 2 → L, N → R → P

Positions which can be operated only while pressing the shift lever knob button, ignition switch ON and brake pedal depressed

P → R

(b) Start the engine and make sure that the vehicle moves forward when shifting the lever from N to D position, and moves rearward when shifting to R position.

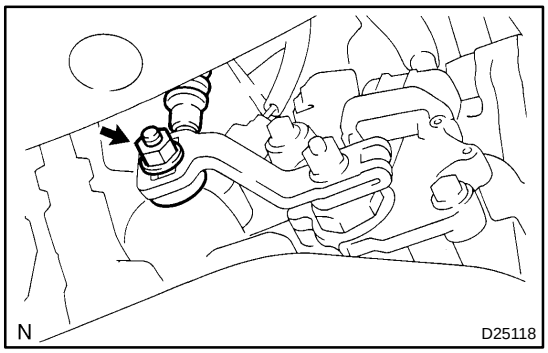

2. ADJUST SHIFT LEVER POSITION

(a) Loosen the nut on the control shaft lever.

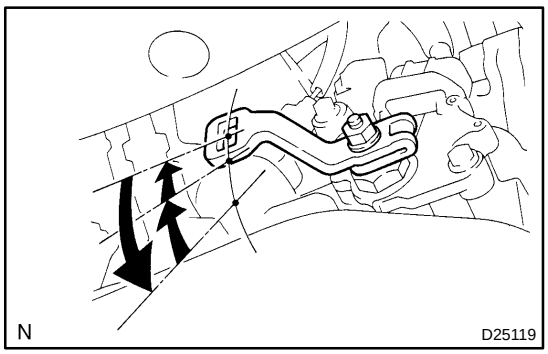

(b) Push the control shaft fully downward.

(c) Return the control shaft lever 2 notches to N position.

(d) Set the shift lever to N position.

(e) While holding the shift lever lightly toward the R position side, tighten the shift lever nut.

Torque: 12 N·m (122 kgf·cm, 9 ft·lbf)

(f) Start the engine and make sure that the vehicle moves forward when shifting the lever from N to D position and moves rearward when shifting it to R position.

FLOOR SHIFT ASSY (ATM)

400LQ–01

COMPONENTS

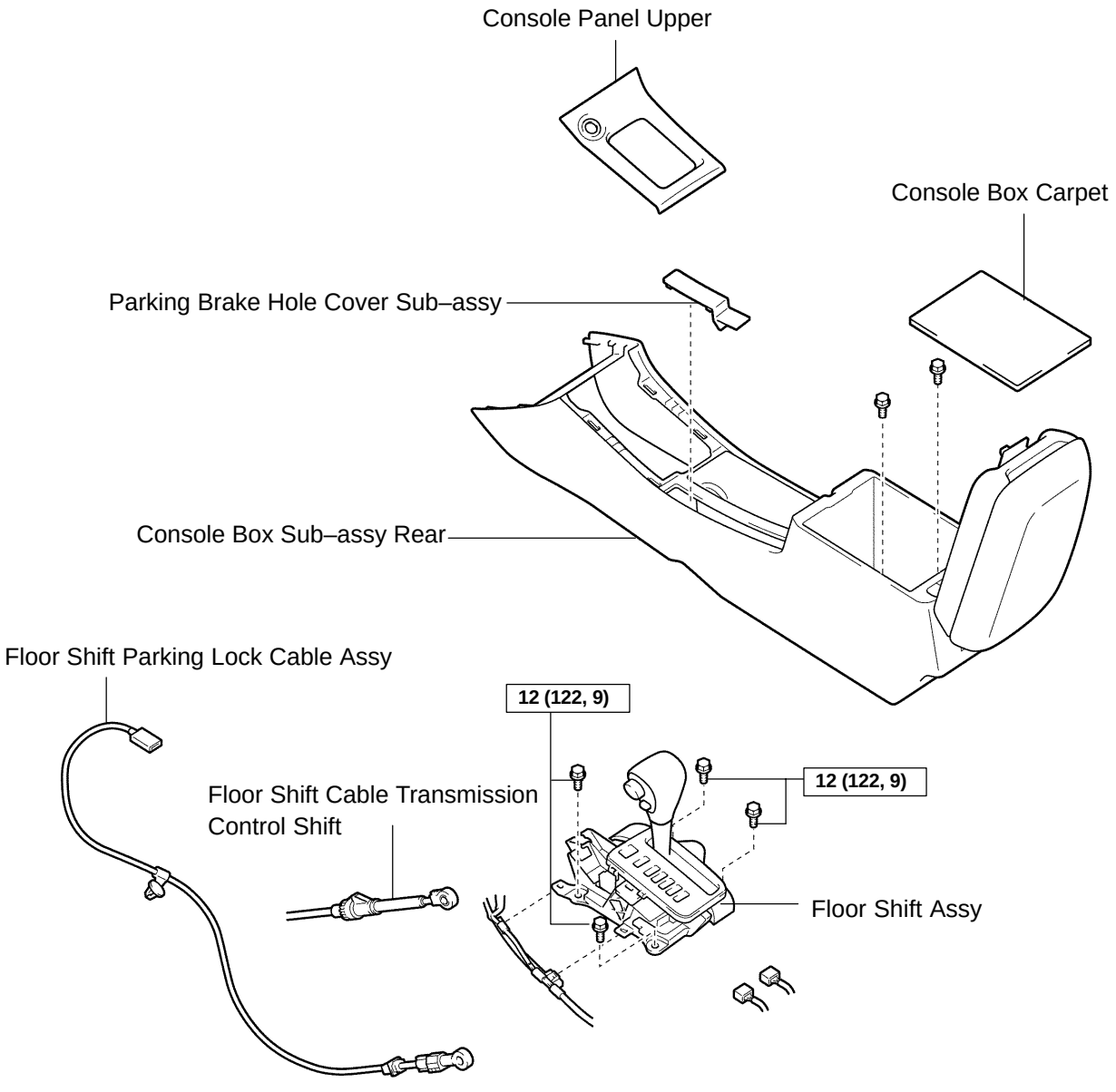

P N·m (kgf·cm, ft·lbf) : Specified torque

C95783

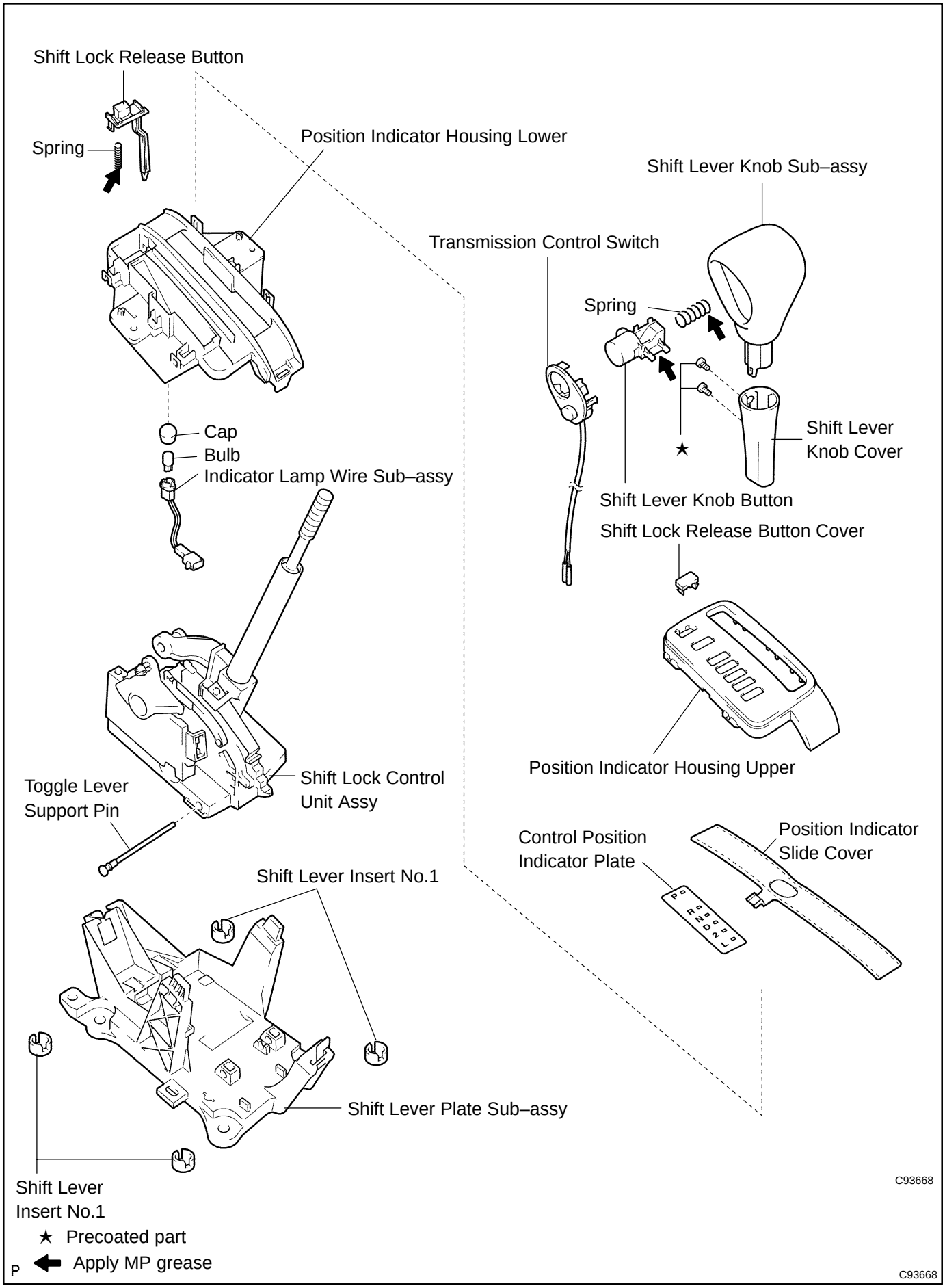
Shift Lock Release Button
Spring
Position Indicator Housing Lower
Shift Lever Knob Sub–assy
Transmission Control Switch
Spring
Cap
Bulb
Indicator Lamp Wire Sub–assy
Shift Lever
Knob Cover
Shift Lever Knob Button
Shift Lock Release Button Cover
Position Indicator Housing Upper
Toggle Lever
Support Pin
Shift Lock Control
Unit Assy
Control Position
Indicator Plate
Position Indicator
Slide Cover
Shift Lever Insert No.1
Shift Lever Plate Sub–assy
Shift Lever
Insert No.1
★ Precoated part
P Apply MP grease
C93668

400LR–01

OVERHAUL

1. **REMOVE CONSOLE PANEL UPPER (See page 71–10)**
2. **REMOVE CONSOLE BOX CARPET (See page 71–10)**
3. **REMOVE PARKING BRAKE HOLE COVER SUB–ASSY (See page 71–10)**
4. **REMOVE CONSOLE BOX SUB–ASSY REAR (See page 71–10)**

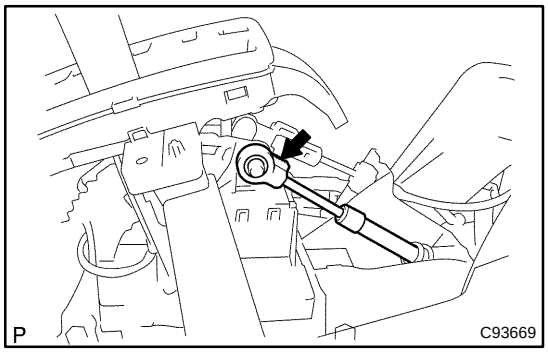

5. DISCONNECT FLOOR SHIFT CABLE TRANSMISSION CONTROL SHIFT

(a) Remove the cable end from the rod of the floor shift assembly.

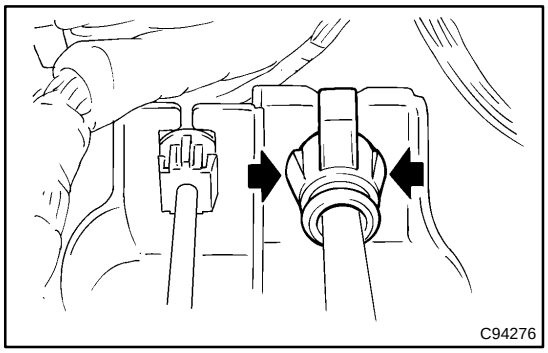

(b) Using a screw driver, disconnect the control cable from the shift lever plate.

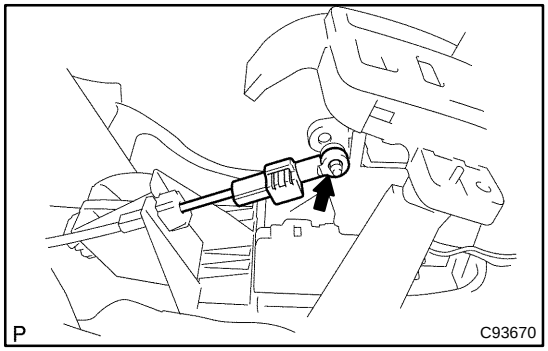

6. DISCONNECT FLOOR SHIFT PARKING LOCK CABLE ASSY

(a) Remove the cable end from the lever pin of the floor shift assembly.

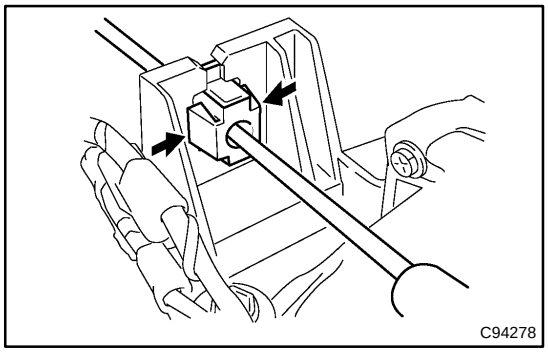

(b) Using a screw driver, disconnect the parking lock cable from the floor shift assembly.

7. REMOVE FLOOR SHIFT ASSY

(a) Disconnect the 2 connector.

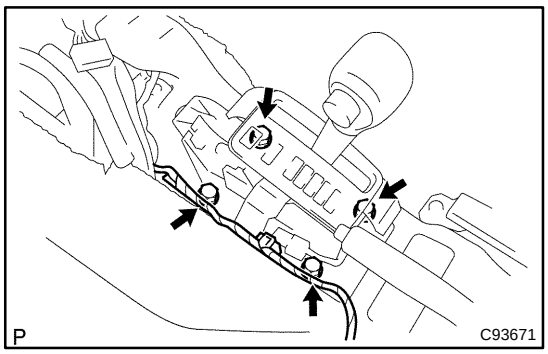

(b) Disconnect the 2 wire harness clamps from the shift lever assy.
(c) Remove the 4 bolts and floor shift assy.

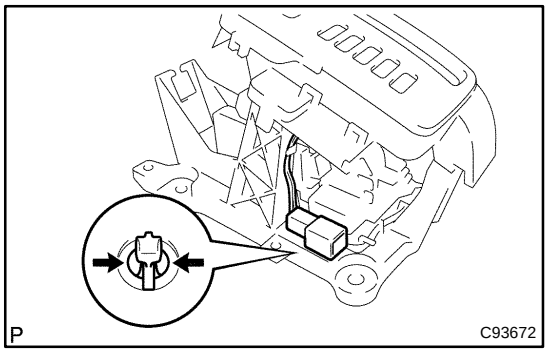

8. REMOVE FLOOR SHIFT SHIFT LEVER KNOB SUB–ASSY

(a) Releasing the lock by pressing the slick, disconnect the indicator lamp wire connector from the shift lever plate.

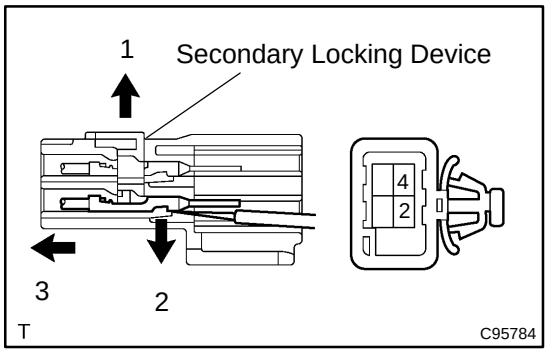

(b) Disengage the secondary locking device.
(c) Using a small screwdriver, disengage the locking lug of the terminals 2 and 4, and pull the terminals out from the rear.
(d) Disconnect the wire harness from the clamps.

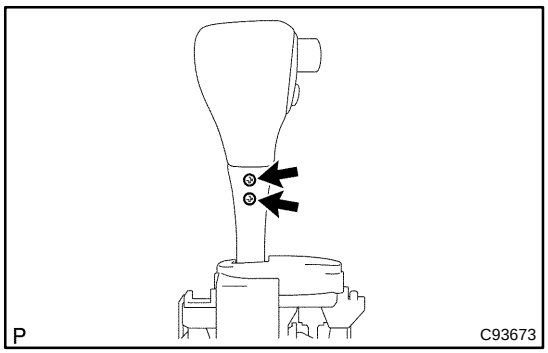

(e) Remove the 2 screws and shift lever knob sub–assembly.

NOTICE:

Pay attention not to apply unnatural load to transmission control switch wire harness.

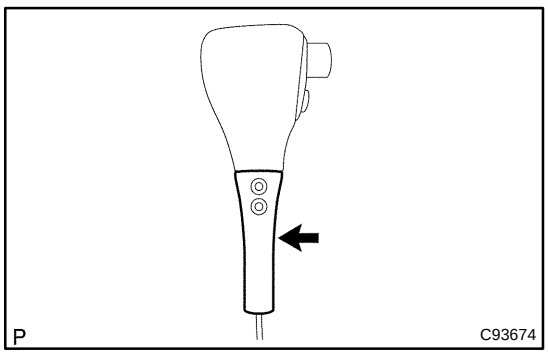

9. REMOVE FLOOR SHIFT SHIFT LEVER KNOB COVER

(a) Remove the shift lever knob cover.

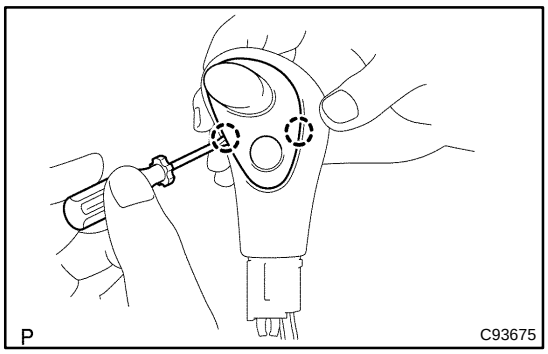

10. REMOVE TRANSMISSION CONTROL SWITCH

(a) Using a small screw driver, remove the transmission control switch.

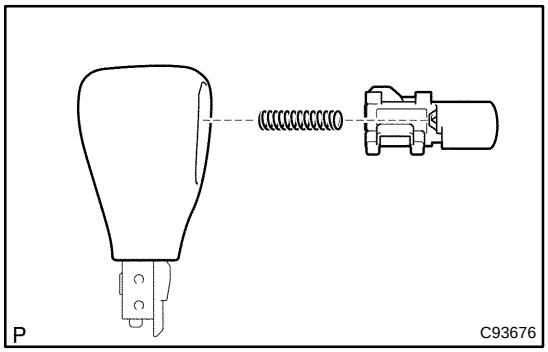

11. REMOVE SHIFT LEVER KNOB BUTTON

(a) Remove the shift lever knob button and spring.

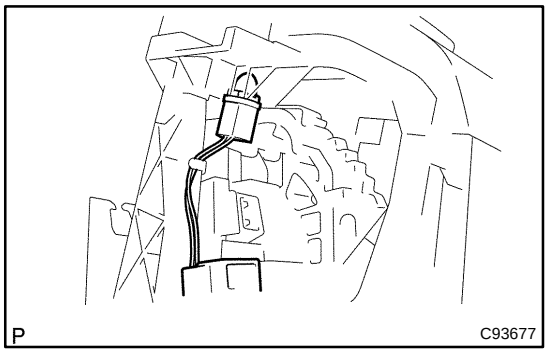

12. REMOVE INDICATOR LAMP WIRE SUB–ASSY

(a) Remove the indicator lamp wire sub–assy.

(b) Remove the cap and bulb from the indicator lamp wire sub–assy.

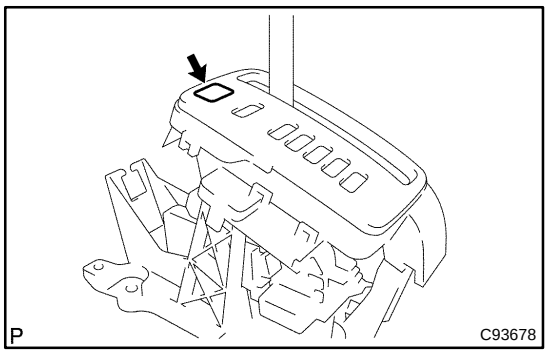

13. REMOVE SHIFT LOCK RELEASE BUTTON COVER

(a) Using a screwdriver, remove the shift lock release button cover.

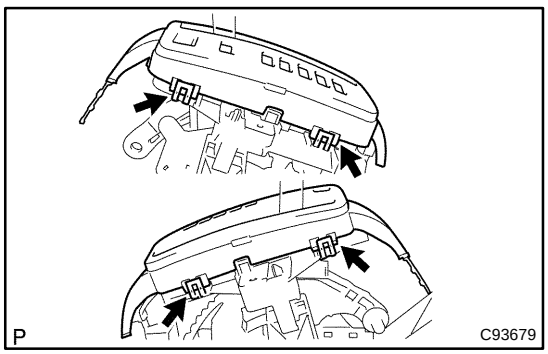

14. REMOVE POSITION INDICATOR HOUSING UPPER

(a) Using a screwdriver, release the 4 claws and remove the position indicator housing upper.

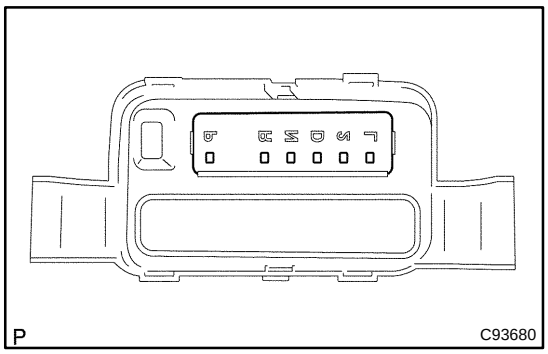

15. REMOVE CONTROL POSITION INDICATOR PLATE

(a) Remove the position indicator plate from the position indicator housing upper.

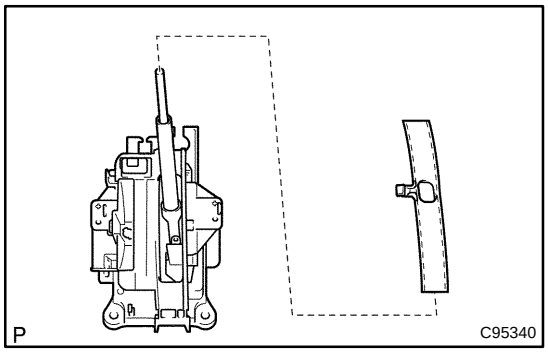

16. REMOVE POSITION INDICATOR SLIDE COVER

(a) Remove the position indicator slide cover.

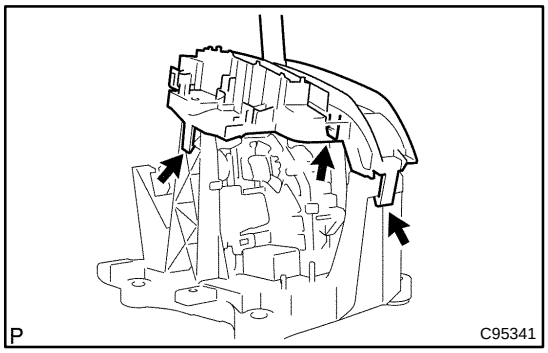

17. REMOVE POSITION INDICATOR HOUSING LOWER

(a) Using a screwdriver, release the 3 claws and remove the position indicator housing lower.

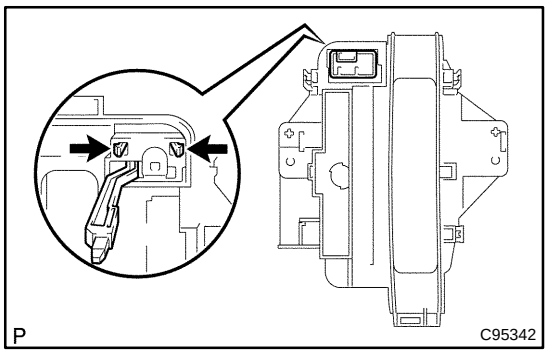

18. REMOVE SHIFT LOCK RELEASE BUTTON

(a) Remove the shift lock release button and spring.

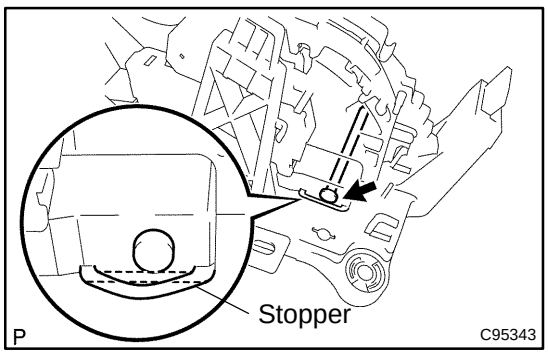

19. REMOVE SHIFT LOCK CONTROL UNIT ASSY

(a) Using a screwdriver, remove the toggle lever support pin and shift lock control unit assy.

NOTICE:

Work so as not to damage the stopper position.

20. REMOVE SHIFT LEVER INSERT NO.1

21. INSTALL SHIFT LEVER INSERT NO.1

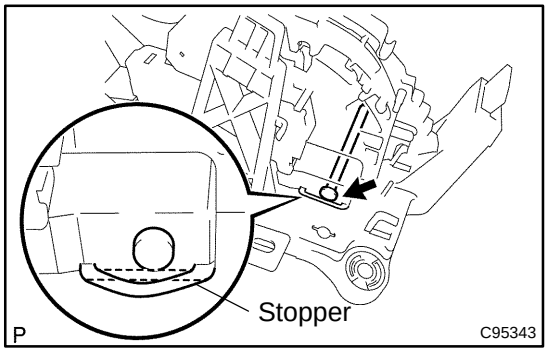

22. INSTALL SHIFT LOCK CONTROL UNIT ASSY

(a) Install the shift lock control unit assy and toggle lever support pin.

NOTICE:

Work so as not to damage the stopper position.

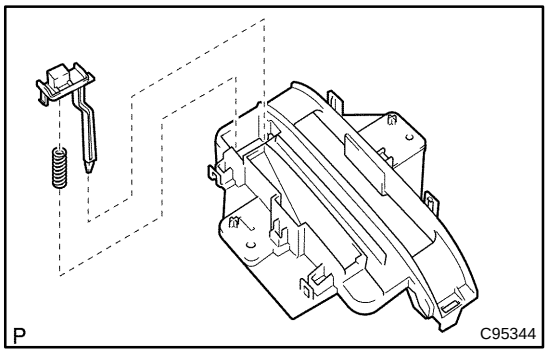

23. INSTALL SHIFT LOCK RELEASE BUTTON

(a) Apply MP grease on the shift lock release spring and shift lock release button.

(b) Install the shift lock release button and shift lock release spring to the position indicator housing lower.

HINT:

Fit the claws securely.

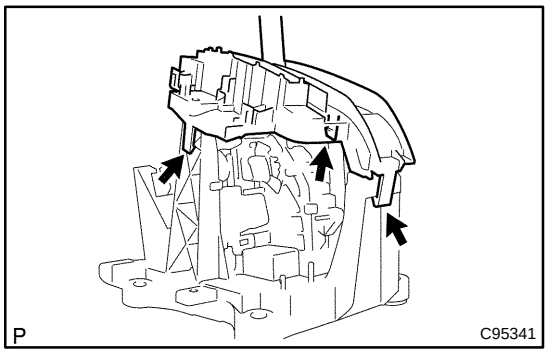

24. INSTALL POSITION INDICATOR HOUSING LOWER

(a) Install the position indicator housing lower.

HINT:

Fit the claws securely.

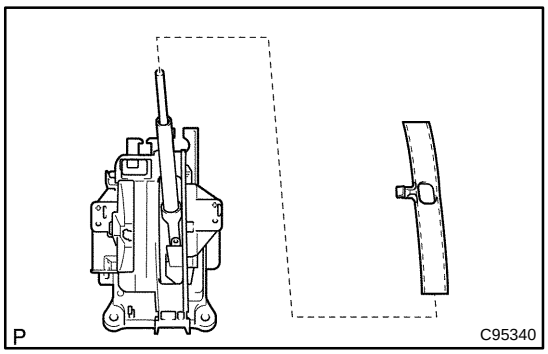

25. INSTALL POSITION INDICATOR SLIDE COVER

(a) Install the position indicator slide cover.

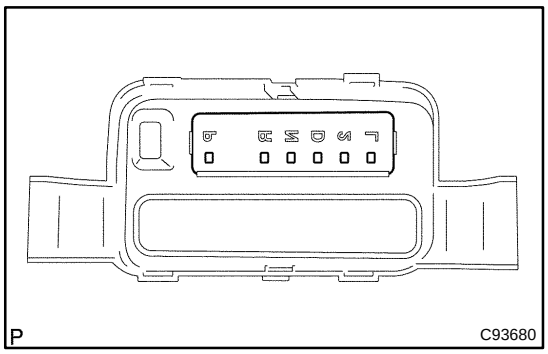

26. INSTALL CONTROL POSITION INDICATOR PLATE

(a) Install the position indicator plate to the position indicator housing upper.

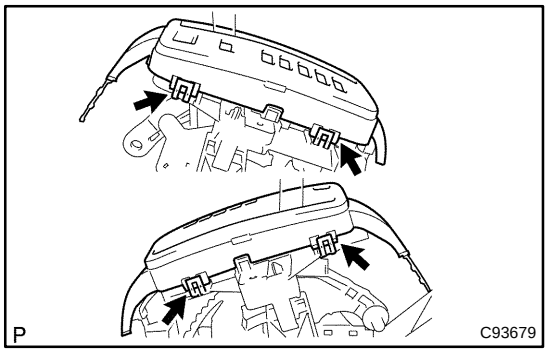

27. INSTALL POSITION INDICATOR HOUSING UPPER

(a) Install the position indicator housing upper.

HINT:

Fit the claws securely.

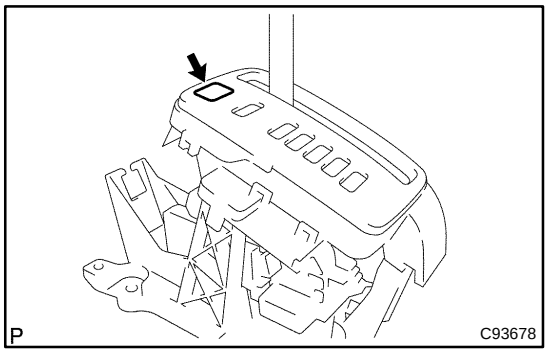

28. INSTALL SHIFT LOCK RELEASE BUTTON COVER

(a) Install the shift lock release button cover to the position indicator housing upper.

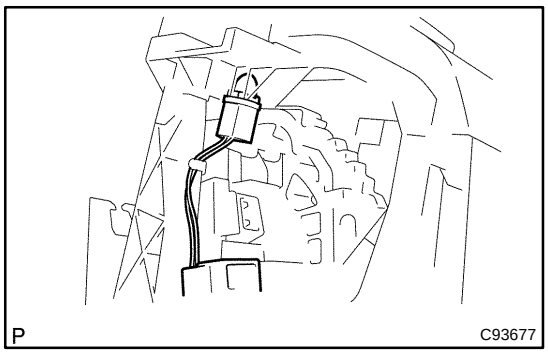

29. INSTALL INDICATOR LAMP WIRE SUB–ASSY

(a) Install the bulb and cap to the indicator lamp wire sub–assy.

(b) Install the indicator lamp wire sub–assy.

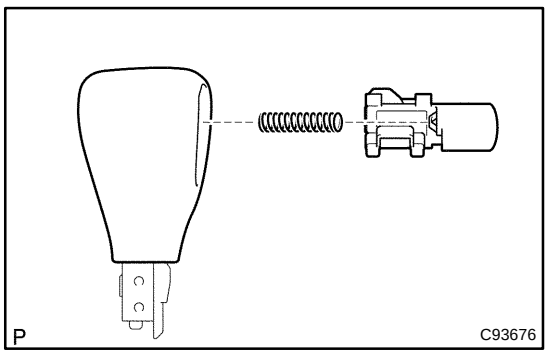

30. INSTALL SHIFT LEVER KNOB BUTTON

(a) Apply MP grease to the spring and shift lever knob button.

(b) Install the spring and shift lever knob button.

HINT:

Fit the claws securely.

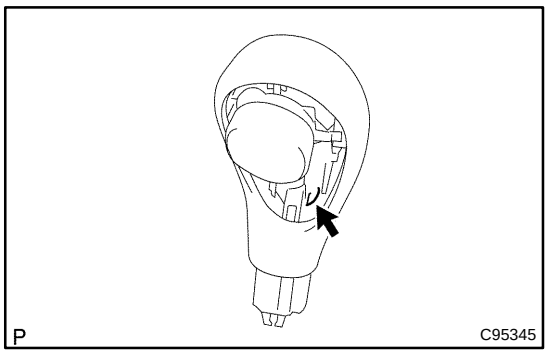

31. INSTALL TRANSMISSION CONTROL SWITCH

(a) Insert the wire harness into the shift lever knob from the part shown by the arrow, and install the transmission control switch to the shift lever knob.

HINT:

Fit the claws securely.

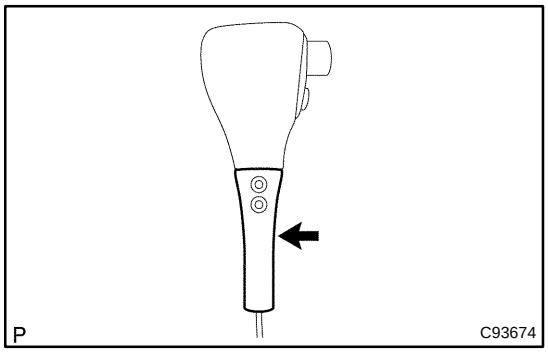

32. INSTALL FLOOR SHIFT SHIFT LEVER KNOB COVER

(a) Install the shift lever knob cover.

33. INSTALL FLOOR SHIFT SHIFT LEVER KNOB SUB–ASSY

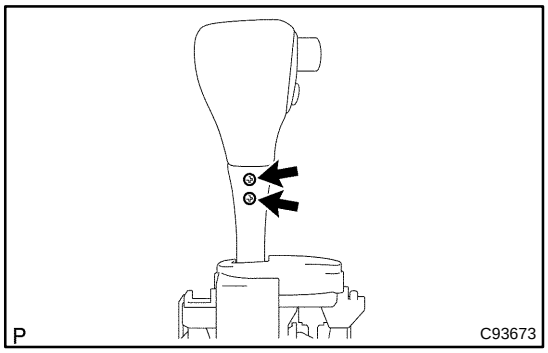

(a) Install the shift lever knob sub–assembly with the 2 screws.

HINT:

Coat the threads of screws with sealant.

Sealant:
Part No. 08833–00080, THREE BOND 1344, LOCTITE 242 or equivalent

NOTICE:

Make sure not to catch wire harness.

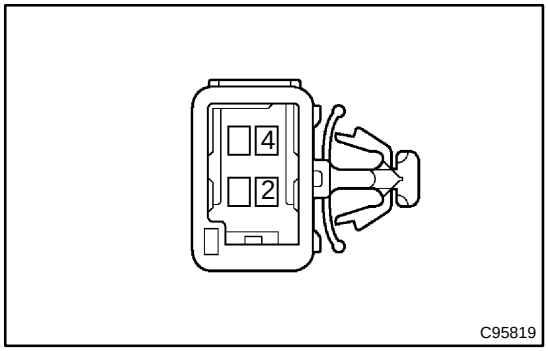

(b) Install the 2 terminals into the indicator lamp wire connector.

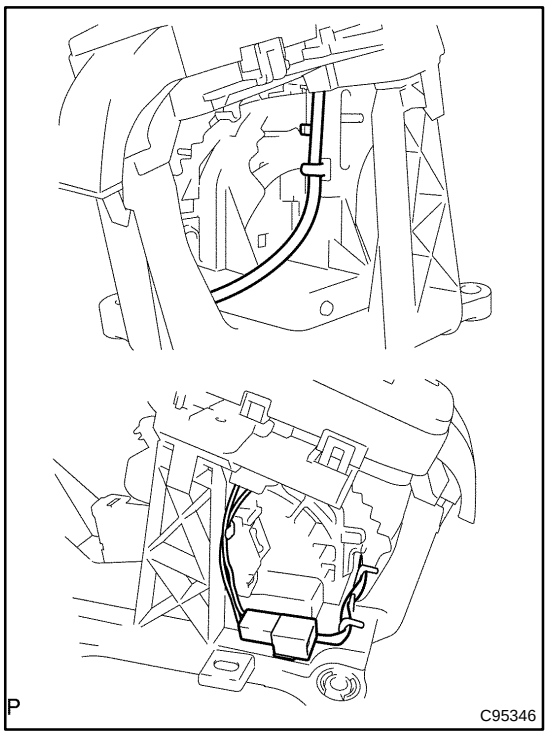

(c) Install the wire harness and connector as shown in the illustration.

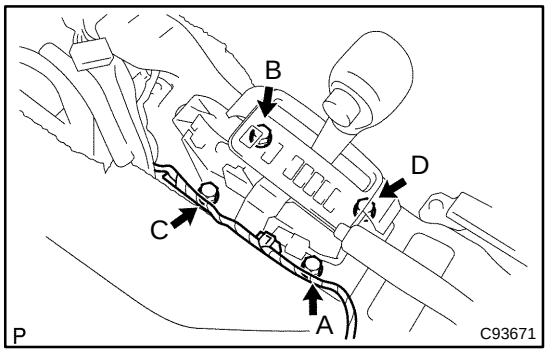

34. INSTALL FLOOR SHIFT ASSY

(a) Install the floor shift assy with the 4 bolts.

Torque: 12 N·m (122 kgf·cm, 9 ft·lbf)

HINT:

Tighten them in the order, A, B, C and D.

(b) Connect the 2 wire harness clamps to the shift lever plate.

(c) Connect the 2 connector.

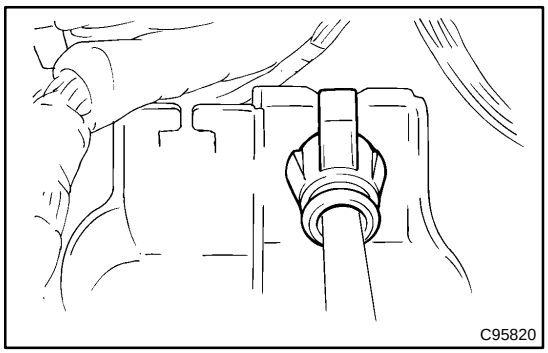

35. CONNECT FLOOR SHIFT CABLE TRANSMISSION CONTROL SHIFT

(a) Install the control cable to the shift lever plate.

HINT:

Fit the claws securely.

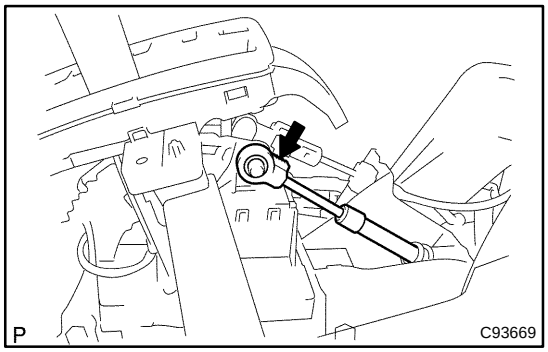

(b) Install the cable end to the rod of the floor shift assy.

HINT:

Install it with the uneven surface facing upward.

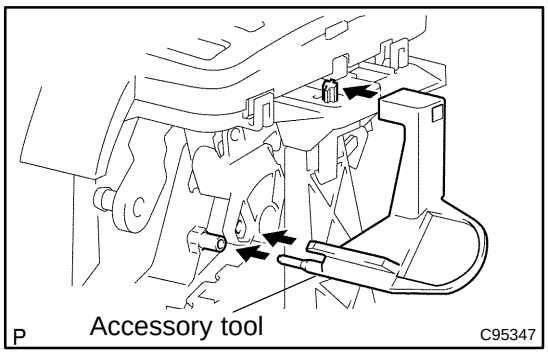

36. CONNECT FLOOR SHIFT PARKING LOCK CABLE ASSY

(a) Set the accessory tool.

(1) Shift the shift lever to N position and turn the ignition switch to ACC or ON.

(2) Set the accessory tool to the shift lock control unit assy as shown in the illustration.

Accessory tool parts No.: 33693–02010

HINT:

Only in the case of reusing the shift lock control unit assy.

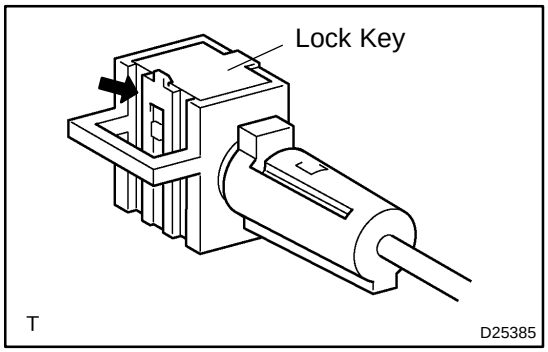

(b) Using a screwdriver, unlock the claw of the lock key of automatic adjustment parts.

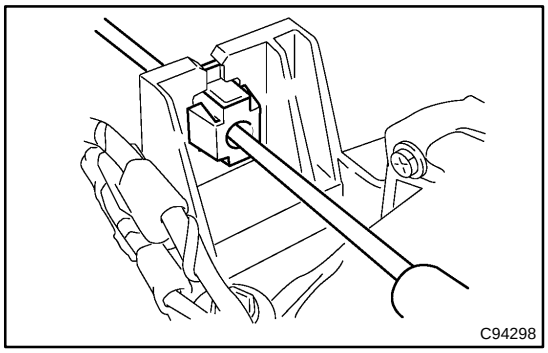

(c) Insert the slide cap into the through hole and install.

HINT:

Fit the claws securely.

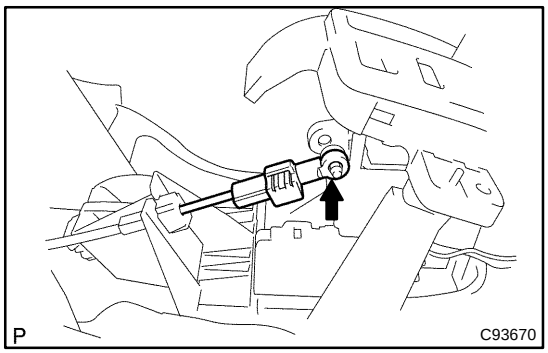

(d) Insert the lever pin into the hole in the cable end.

HINT:

Fit the claws securely.

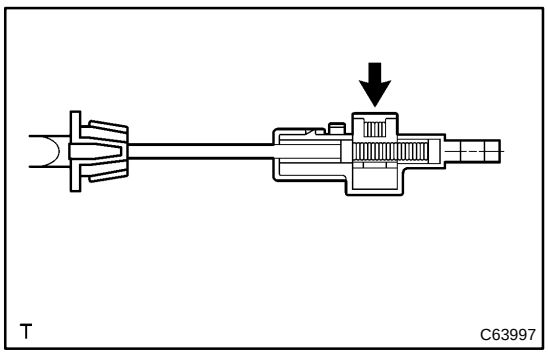

(e) Lock the lock key.

HINT:

At this time, the shift lever should be in N position and the ignition key should be set to ACC or ON.

(f) Remove the accessory tool.

Accessory tool parts No.: 33693–02010

37. CHECK KEY INTERLOCK OPERATION (See page 40–30)
38. CHECK SHIFT LOCK OPERATION (See page 40–30)
39. CHECK SHIFT LOCK RELEASE BUTTON OPERATION (See page 40–30)

FLOOR SHIFT CABLE TRANSMISSION CONTROL SHIFT (ATM)

400LT–01

REPLACEMENT

1. PRECAUTION (See page 60–1)
2. DISCONNECT BATTERY NEGATIVE TERMINAL
3. REMOVE PARKING BRAKE HOLE COVER SUB–ASSY (See page 71–10)
4. REMOVE CONSOLE PANEL UPPER (See page 71–10)
5. REMOVE CONSOLE BOX CARPET (See page 71–10)
6. REMOVE CONSOLE BOX SUB–ASSY REAR (See page 71–10)
7. REMOVE AIR BAG SENSOR ASSY CENTER (See page 60–38)
8. DISCONNECT OXYGEN SENSOR CONNECTOR
(a) Remove the foot rest.
(b) Pull up the floor carpet.
(c) Disconnect the oxygen sensor connector.
9. REMOVE FLOOR PANEL BRACE FRONT
(a) Remove the 2 nuts and floor panel brace.
10. REMOVE EXHAUST PIPE ASSY FRONT (See page 15–2)
11. REMOVE FRONT FLOOR HEAT INSULATOR NO.1
(a) Remove the 3 nuts and heat insulator.
12. REMOVE AIR CLEANER CASE
13. REMOVE AIR CLEANER HOSE NO.1

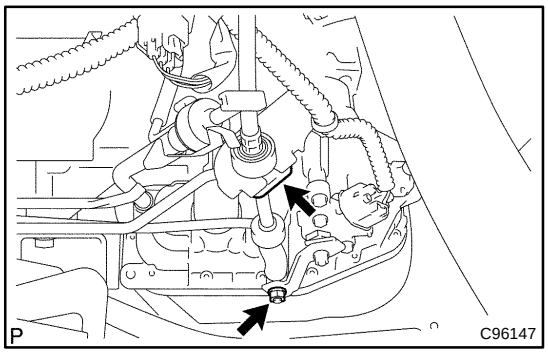

14. REMOVE FLOOR SHIFT CABLE TRANSMISSION CONTROL SHIFT
(a) Remove the nut from control shaft lever.
(b) Disconnect the control cable from the control shaft lever.
(c) Remove the clip and disconnect the control cable from the control cable bracket.
(d) Disconnect the control cable from the control cable support.

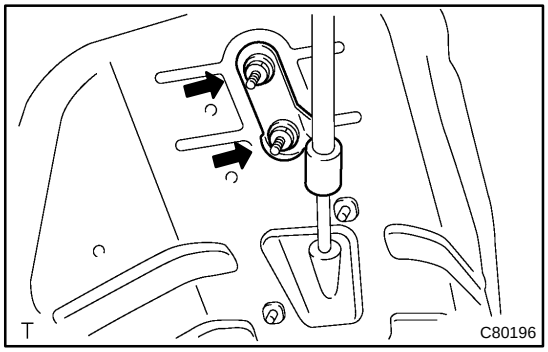

(e) Remove the 2 nuts.

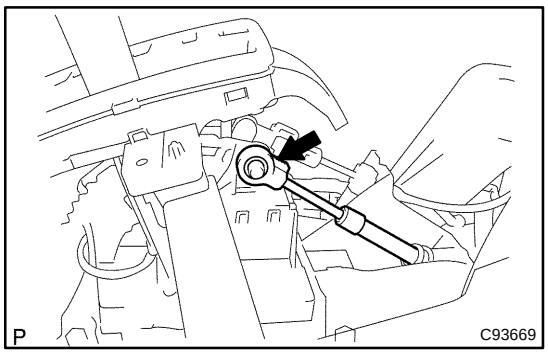

(f) Remove the cable end from the rod of the floor shift assembly.

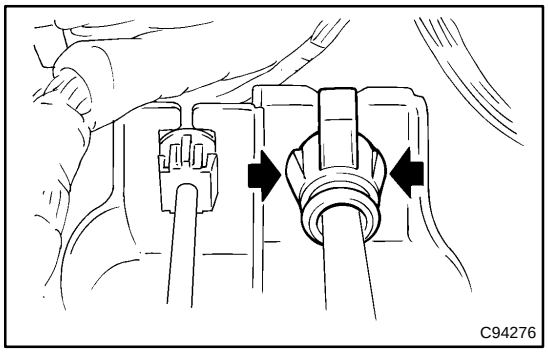

(g) Using a screw driver, disconnect the control cable from the shift lever plate.

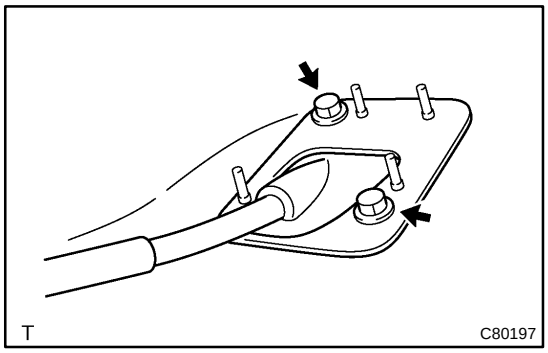

(h) Remove the 2 bolts.
(i) Pull out the control cable assy from the body.
(j) Remove the retainer from the shift cable.

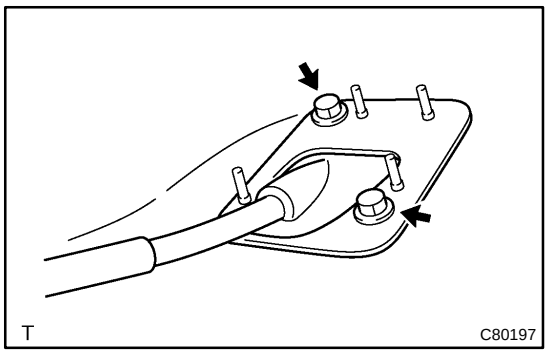

15. INSTALL FLOOR SHIFT CABLE TRANSMISSION CONTROL SHIFT

(a) Install the retainer to the shift cable.
(b) Pull in the control cable assy to the body.
(c) Install the 2 bolts.
Torque: 5.0 N·m (50 kgf·cm, 43 in.·lbf)

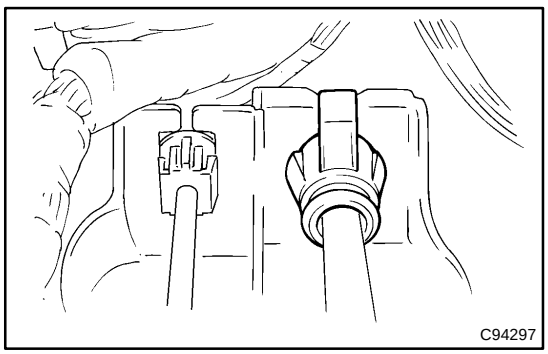

(d) Install the control cable to the shift lever plate.

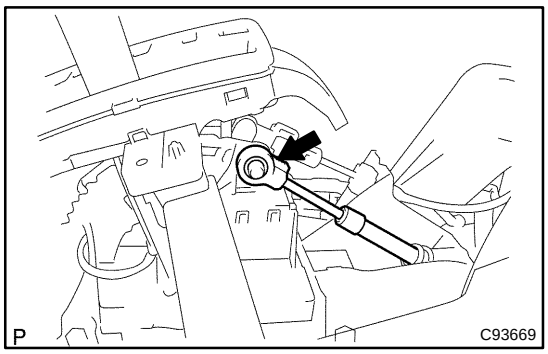

(e) Install the cable end to the rod of the floor shift assy.

HINT:

Install it with the uneven surface facing upward.

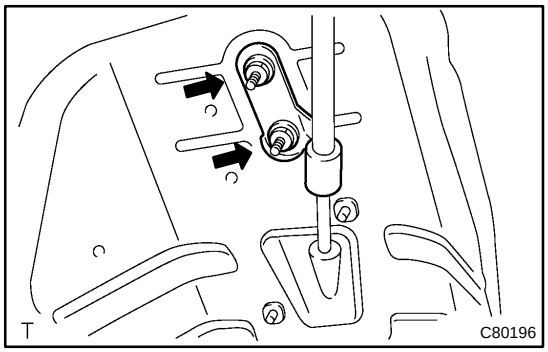

(f) Install the control cable and 2 nuts.

Torque: 12 N·m (122 kgf·cm, 9 ft·lbf)

(g) Connect the control cable to the control cable support.

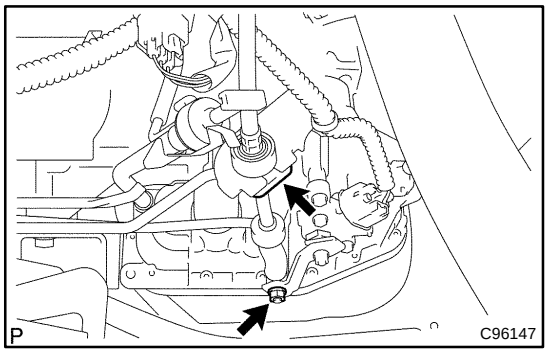

(h) Temporarily install the control cable to the control shaft lever with the nut.

(i) Install the control cable and clip to the bracket.

16. INSTALL AIR CLEANER CASE

17. INSTALL FRONT FLOOR HEAT INSULATOR NO.1

(a) Install the heat insulator with the 3 nuts.

Torque: 5.5 N·m (56 kgf·cm, 49 in.·lbf)

18. INSTALL EXHAUST PIPE ASSY FRONT (See page 15–2)

19. INSTALL FLOOR PANEL BRACE FRONT

(a) Install the floor panel brace with the 2 nuts.

Torque: 29.6 N·m (302 kgf·cm, 22 ft·lbf)

20. INSTALL OXYGEN SENSOR CONNECTOR

(a) Connect the oxygen sensor connector.

(b) Install the floor carpet and foot rest.

21. INSTALL AIR BAG SENSOR ASSY CENTER (See page 60–38)

22. ADJUST SHIFT LEVER POSITION (See page 40–44)

23. INSPECT SHIFT LEVER POSITION (See page 40–44)

24. INSPECT SRS WARNING LIGHT (See page 60–8)

FLOOR SHIFT PARKING LOCK CABLE ASSY (ATM)

400LU–02

REPLACEMENT

1. **PRECAUTION (See page 60–1)**
2. **DISCONNECT BATTERY NEGATIVE TERMINAL**
3. **PLACE FRONT WHEELS FACING STRAIGHT AHEAD**
4. **REMOVE HORN BUTTON ASSY (See page 60–13)**
5. **REMOVE STEERING WHEEL ASSY**
   SST 09950–50013 (09951–05010, 09952–05010, 09953–05020, 09954–05021)
6. **REMOVE STEERING COLUMN COVER (See page 50–8)**
7. **REMOVE CONSOLE PANEL UPPER (See page 71–10)**
8. **REMOVE PARKING BRAKE HOLE COVER SUB–ASSY (See page 71–10)**
9. **REMOVE CONSOLE BOX CARPET (See page 71–10)**
10. **REMOVE CONSOLE BOX SUB–ASSY REAR (See page 71–10)**

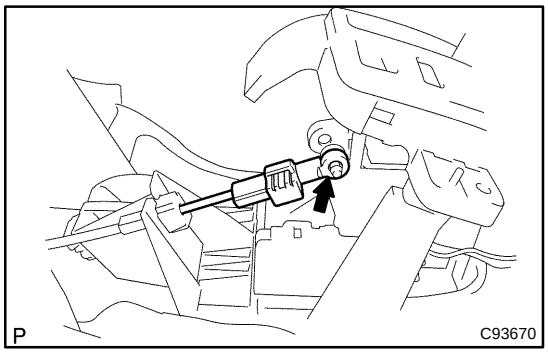

11. **REMOVE FLOOR SHIFT PARKING LOCK CABLE ASSY**

(a) Remove the cable end from the lever pin of the floor shift assembly.

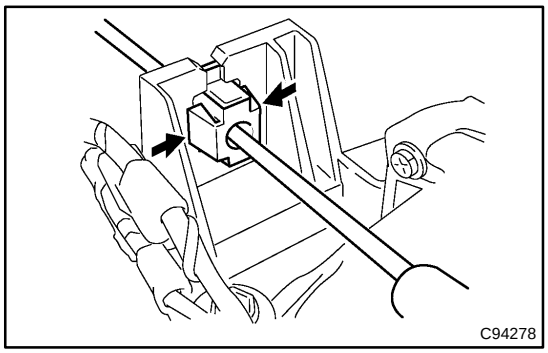

(b) Using a screwdriver, disconnect the parking lock cable from the floor shift assembly.

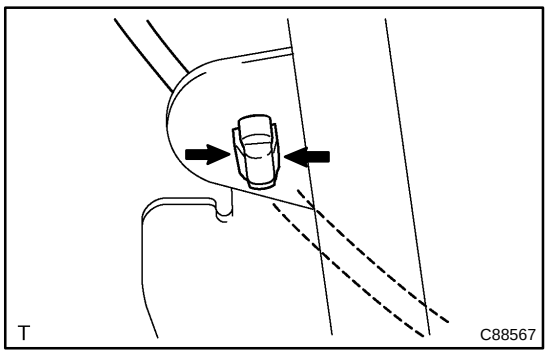

(c) Disconnect the cable clamp.

(d) Turn the ignition switch ACC or ON.

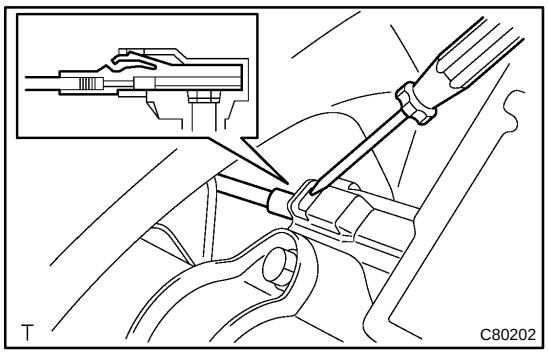

(e) Using a screwdriver, remove the cable from the upper bracket.

HINT:

Before disconnecting the cable, keep in mind each of the physical relationship between the connector and wire harness or other cables.

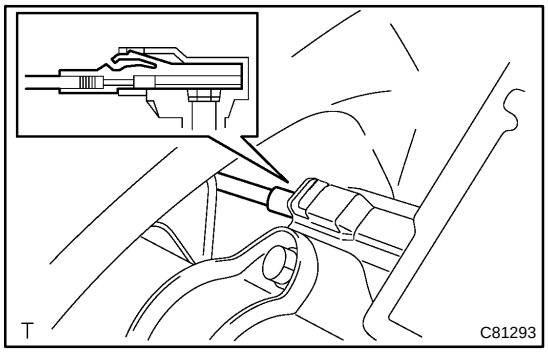

12. INSTALL FLOOR SHIFT PARKING LOCK CABLE ASSY

(a) Turn the ignition switch ACC or ON.

(b) Install the cable to the upper bracket.

HINT:

Connect the removed cable so that it will be the same physical relationship you kept in mind before its disconnection.

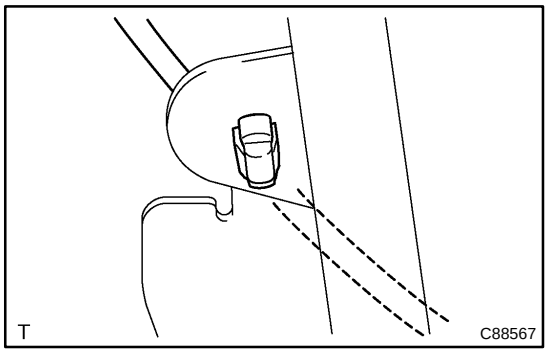

(c) Connect the cable clamp.

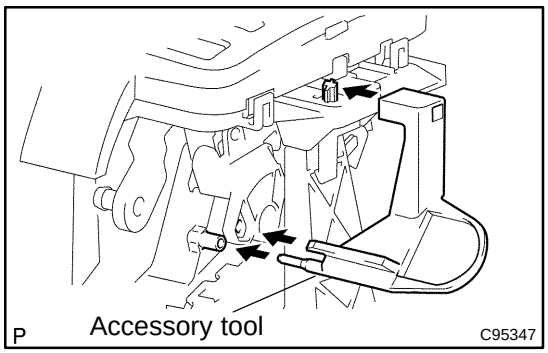

(d) Set the accessory tool.

(1) Shift the shift lever to N position and turn the ignition switch to ACC or ON.

(2) Set the accessory tool to the shift lock control unit assy as shown in the illustration.

Accessory tool parts No.: 33693–02010

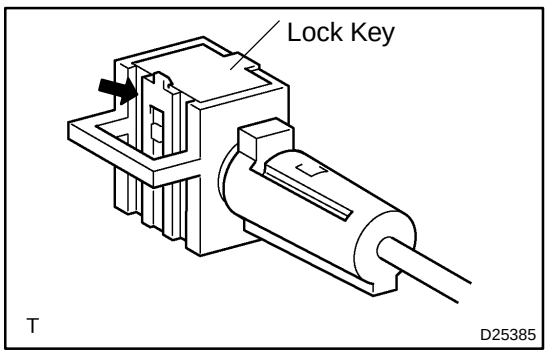

(e) Using a screwdriver, unlock the claw of the lock key of automatic adjustment part.

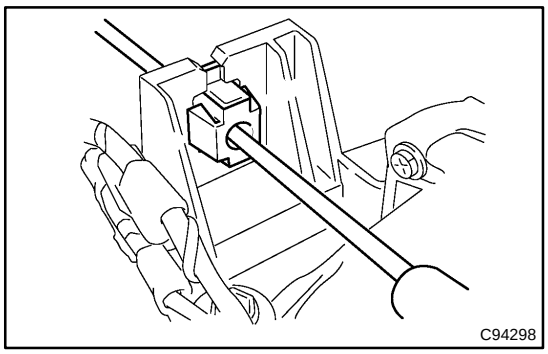

(f) Insert the slide cap into the through hole and install.

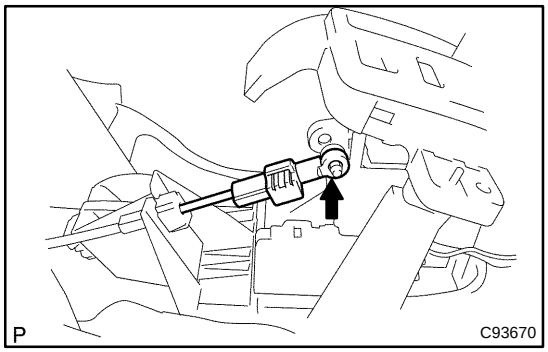

(g) Insert the lever pin into the hole in the cable end.

HINT:

Fit the claws securely.

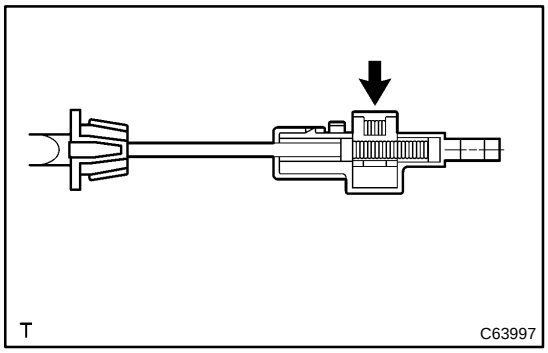

(h) Lock the lock key.

HINT:

At this time, the shift lever should be in N position and the ignition key should be set to ACC or ON.

(i) Remove the accessory tool.

Accessory tool parts No.: 33693–02010

13. INSTALL STEERING WHEEL ASSY

14. INSPECT STEERING WHEEL CENTER POINT

15. INSTALL HORN BUTTON ASSY (See page 60–13)

16. INSPECT SRS WARNING LIGHT (See page 60–8)

17. CHECK KEY INTERLOCK OPERATION (See page 40–30)

AUTOMATIC TRANSAXLE FLUID (ATM)

400LG–01

ON–VEHICLE INSPECTION

1. CHECK THE FLUID LEVEL

HINT:

Drive the vehicle so that the engine and transaxle are at normal operating temperature.

Fluid temperature: 70 – 80 ˚C (158 – 176 ˚F)

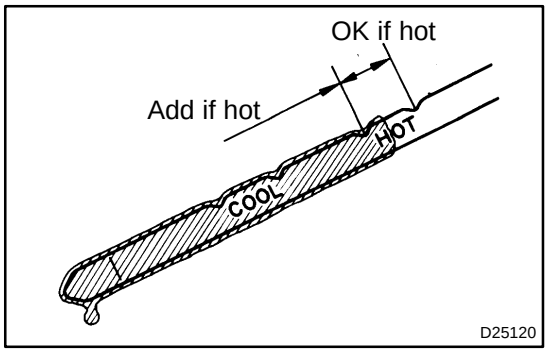

(a) Park the vehicle on a level surface and set the parking brake.
(b) With the engine idling and the brake pedal depressed, shift the shift lever into all ranges from P to L position and return to P position.
(c) Pull out the dipstick and wipe it clean.
(d) Push it back fully into the pipe.
(e) Pull it out and check that the fluid level is in the HOT position.

If there are leaks, it is necessary to repair or replace O–rings, FIPGs, oil seals, plugs or other parts.

FRONT DIFFERENTIAL OIL SEAL (ATM)

400LP–02

REPLACEMENT

1. REMOVE FRONT WHEELS
2. REMOVE ENGINE UNDER COVER RH
3. REMOVE ENGINE UNDER COVER LH
4. DRAIN AUTOMATIC TRANSAXLE FLUID
(a) Remove the drain plug, gasket and drain ATF.
(b) Install a new gasket and drain plug.
Torque: 17.5 N·m (178 kgf·cm, 13 ft·lbf)
5. REMOVE FRONT DRIVE SHAFT ASSY RH (See page 30–6)
6. REMOVE FRONT DRIVE SHAFT ASSY LH (See page 30–6)

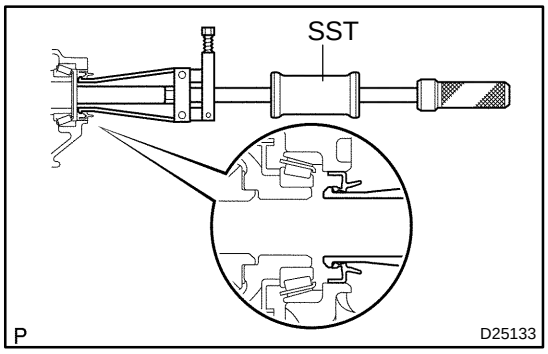

7. REMOVE TRANSAXLE HOUSING OIL SEAL(RH)
(a) Using SST, pull out the oil seal.
SST 09308–00010

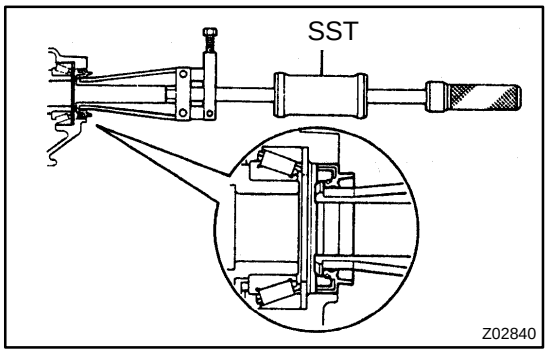

8. REMOVE TRANSAXLE CASE OIL SEAL(LH)
(a) Using SST, pull out the oil seal.
SST 09308–00010

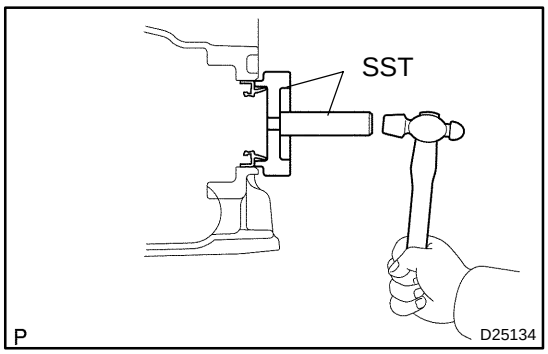

9. INSTALL TRANSAXLE HOUSING OIL SEAL(RH)
(a) Using SST and a hammer, drive in a new oil seal.
SST 09350–32014 (09351–32130, 09351–32150)
Oil seal drive in depth:
2.0 ± 0.5 mm (0.079 ± 0.020 in.)
(b) Coat the lip of the oil seal with MP grease.

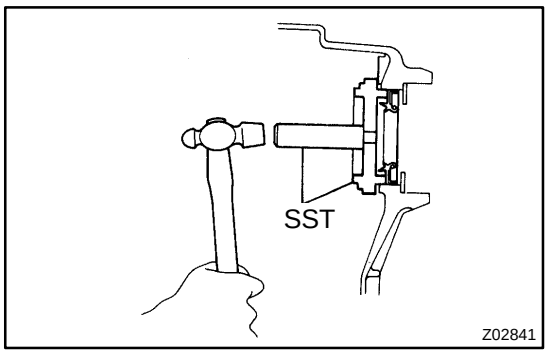

10. INSTALL TRANSAXLE CASE OIL SEAL(LH)

(a) Using SST and a hammer, drive in a new oil seal.
SST 09350–32014 (09351–32111, 09351–32130)
Oil seal drive in depth:
5.3 ± 0.5 mm (0.209 ± 0.020 in.)

(b) Coat the lip of the oil seal with MP grease.

11. INSTALL FRONT DRIVE SHAFT ASSY LH (See page 30–6)
12. INSTALL FRONT DRIVE SHAFT ASSY RH (See page 30–6)
13. INSTALL ENGINE UNDER COVER LH
14. INSTALL ENGINE UNDER COVER RH
15. INSTALL FRONT WHEELS
Torque: 103 N·m (1050 kgf·cm, 76 ft·lbf)
16. ADD AUTOMATIC TRANSAXLE FLUID
17. INSPECT AUTOMATIC TRANSAXLE FLUID (See page 40–2)
18. INSPECT AND ADJUST FRONT WHEEL ALIGNMENT (See page 26–5)
19. CHECK ABS SPEED SENSOR SIGNAL (W/ ABS) (See page 05–297)

AUTOMATIC TRANSAXLE ASSY (ATM)

400LF–01

PRECAUTION

1. **The automatic transaxle is composed of highly precision–finished parts, necessitating careful inspection before reassembly because even a small nick could cause fluid leakage or affect the performance. The instructions here are organized so that you work on only one component group at a time. This will help avoid confusion from similar–looking parts of different sub–assemblies being on your workbench at the same time. The component groups are inspected and repaired from the converter housing side. As much as possible, complete the inspection, repair and reassembly before proceeding to the next component group. If a defect is found in a certain component group during reassembly, inspect and repair this group immediately. If a component group cannot be assembled because parts are being ordered, be sure to keep all parts of the group in a separate container while proceeding with disassembly, inspection, repair and reassembly of other component groups.**
   Recommended ATF: T–IV
2. **All disassembled parts should be washed clean and any fluid passages and holes should be blown through with compressed air.**
3. **Dry all parts with compressed air–never use shop rags.**
4. **When using compressed air, always aim away from yourself to prevent accidentally spraying ATF or kerosene on your face.**
5. **The recommended automatic transaxle fluid or kerosene should be used for cleaning.**
6. **After cleaning, the parts should be arranged in the correct order for efficient inspection, repairs, and reassembly.**
7. **When disassembling a valve body, be sure to match each valve together with the corresponding spring.**
8. **New discs for the brakes and clutches that are to be used for replacement must be soaked in ATF for at least 15 minutes before reassembly.**
9. **All oil seal rings, clutch discs, clutch plates, rotating parts, and sliding surfaces should be coated with ATF prior to reassembly.**
10. **All gaskets and rubber O–rings should be replaced.**
11. **Do not apply adhesive cements to gaskets and similar parts.**
12. **Make sure that the ends of a snap ring are not aligned with one of the cutouts and are installed in the groove correctly.**
13. **If a worn bushing is to be replaced, the sub–assembly containing the bushing must also be replaced.**
14. **Check thrust bearings and races for wear or damage. Replace if necessary.**
15. **Use petroleum jelly to keep parts in place.**
16. **When working with FIPG material, you must observe the following.**
    Using a razor blade and a gasket scraper, remove all the old packing (FIPG) material from the gasket surface.
    Thoroughly clean all components to remove all the loose material.
    Clean both sealing surfaces with a non–residue solvent.
    Parts must be reassembled within 10 minutes of application. Otherwise, the packing (FIPG) material must be removed and reapplied.

SHIFT LOCK SYSTEM (ATM)

400LV–01

ON–VEHICLE INSPECTION

1. CHECK SHIFT LOCK OPERATION

(a) Shift the shift lever to P position.
(b) Turn the ignition switch to LOCK.
(c) Check that the shift lever cannot be shifted to any other positions other than P.
(d) Turn the ignition switch to ON, depress the brake pedal and check that the shift lever can be shifted to any other positions.

2. CHECK SHIFT LOCK RELEASE BUTTON OPERATION

(a) Using a screwdriver, remove the shift lock release button cover.
(b) When operating the shift lever with the shift lock release button pressed and the ignition key in ACC or ON, check that the lever can be shifted to any other positions.

3. CHECK KEY INTERLOCK OPERATION

(a) Turn the ignition switch to ON.
(b) Depress the brake pedal and shift the shift lever to any other positions other than P.
(c) Check that the ignition key cannot be turned to LOCK.
(d) Shift the shift lever to P position, turn the ignition key to LOCK and check that the ignition key can be removed.

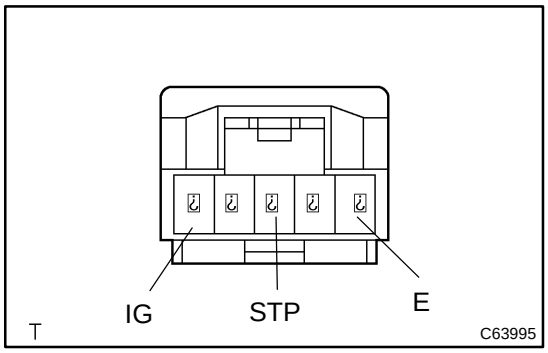

4. INSPECT SHIFT LOCK CONTROL ECU

(a) Using a voltmeter, measure the voltage at each terminal.

HINT:

Do not disconnect the shift lock control ECU connector.

Terminal	Measuring Condition	Voltage (V)
5 (IG) – 1 (E)	Ignition switch ON	10 – 14
5 (IG) – 1 (E)	Ignition switch OFF	0
3 (STP) – 1 (E)	Depress brake pedal	10 – 14
3 (STP) – 1 (E)	Release brake pedal	0

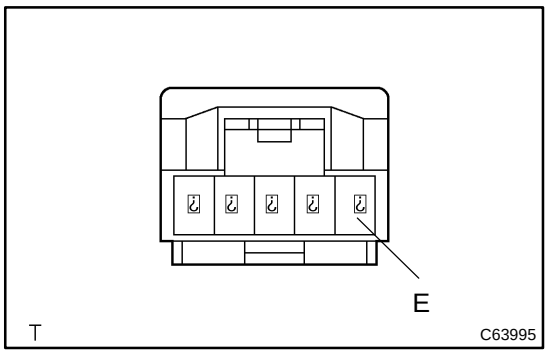

(b) Using an ohmmeter, measure the resistance at terminal E (1) and body ground.

Terminal	Measuring Condition	Specified Value
1 (E) – Body ground	Always	Continuity

SPEEDOMETER SENSOR (ATM)

400LM–01

REPLACEMENT

1. REMOVE AIR CLEANER CASE

2. REMOVE AIR CLEANER HOSE NO.1

3. REMOVE SPEEDOMETER SENSOR

(a) Disconnect the connector.

(b) Remove the bolt and speedometer sensor assembly.

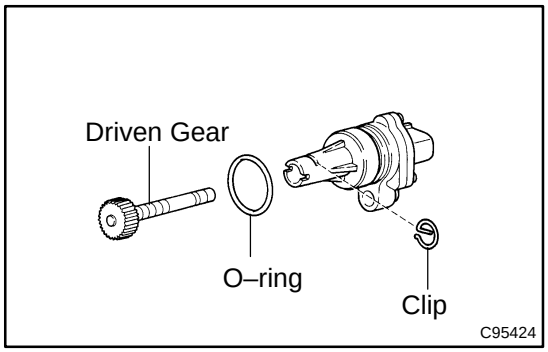

(c) Remove the clip and driven gear from the speedometer sensor.

4. INSTALL SPEEDOMETER SENSOR

(a) Coat a O–ring with ATF and install it to the speedometer sensor.

(b) Install the driven gear to the speedometer sensor with the clip.

(c) Install the speedometer sensor assembly with the bolt.
Torque: 11.3 N·m (115 kgf·cm, 9 ft·lbf)

(d) Connect the connector.

5. INSTALL AIR CLEANER HOSE NO.1

6. INSTALL AIR CLEANER CASE
Torque: 7.0 N·m (71 kgf·cm, 62 in.·lbf)

TORQUE CONVERTER CLUTCH AND DRIVE PLATE (ATM)

400LL–01

INSPECTION

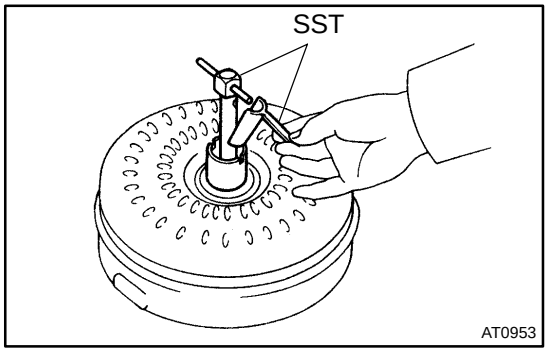

1. INSPECT TORQUE CONVERTER CLUTCH ASSY

(a) Inspect the one–way clutch.

(1) Set SST into the inner race of the one–way clutch.

SST 09350–32014 (09351–32010)

(2) Set SST so that it fits in the notch of the converter hub and outer race of the one–way clutch.

SST 09350–32014 (09351–32020)

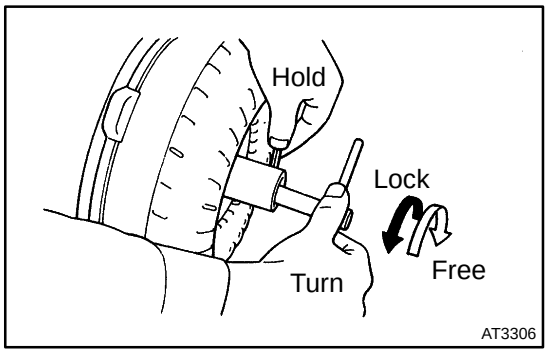

(3) With the torque converter clutch setting up on its side, check that the one–way clutch locks when it is turned counterclockwise, and rotates smoothly clockwise.

If necessary, clean the torque converter clutch and retest the one–way clutch.

Replace the torque converter clutch if the one–way clutch still fails the test.

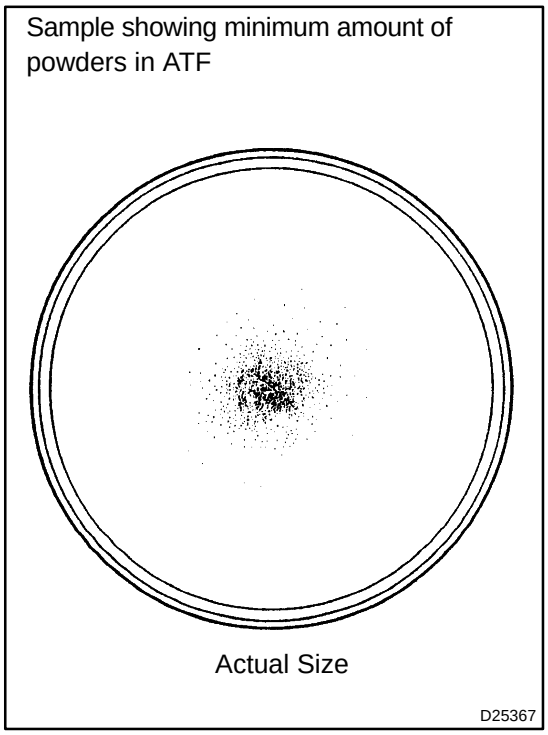

(b) Determine the condition of the torque converter clutch assy.

(1) If the inspection result of the torque converter clutch assy meets the following item, replace the torque converter clutch.

Malfunction item:

Any metallic sound is heard from the torque converter clutch during stall test or when the shift lever is in neutral position.

One–way clutch is free or locked in both directions.

Fine powders exceeding the sample limit is identified in ATF. (See the sample.)

HINT:

The sample shows the auto fluid of approx. 0.25 liters (0.26 US qts, 0.22 Imp. qts) that is taken out from the removed torque converter clutch

(c) Replace the ATF in the torque converter clutch.

(1) If the ATF is discolored and/or has a foul odor, completely stir the ATF in the torque converter clutch and drain it with the face for installation facing up.

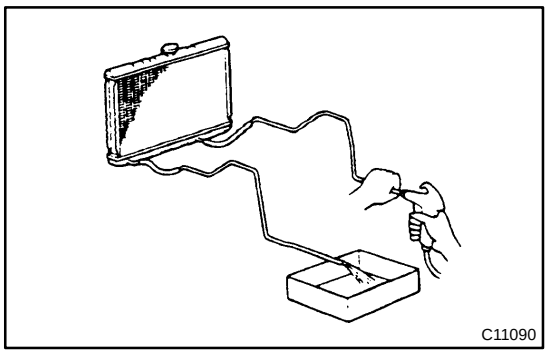

(d) Clean and check the oil cooler and oil pipe line.
(1) If the torque converter clutch is inspected or the ATF is exchanged, clean the oil cooler and oil pipe line.

HINT:

- Spray compressed air of 196 kPa (2 kgf/cm^2, 28 psi) from the inlet hose.
- If plenty of fine powders are identified in the ATF, add new ATF using a bucket pump and clean it again.

(2) If the ATF is cloudy, inspect the oil cooler.

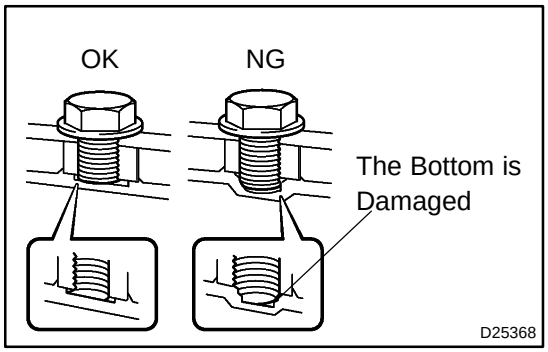

(e) Prevent deformation of the torque converter clutch and damage to the oil pump gear.
(1) When any marks due to interference are found on the end of the bolt for the torque converter clutch and on the bottom of the bolt hole, replace the bolt and the torque converter clutch.
(2) All of the bolts should have the same length.
(3) No missing spring washer.

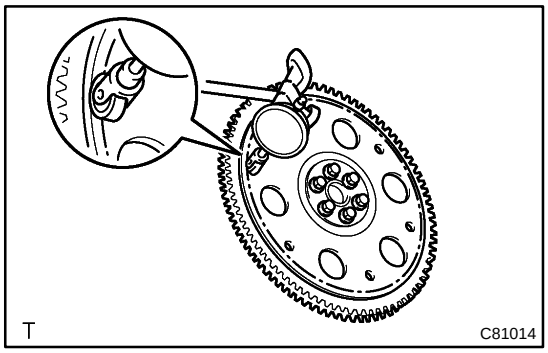

2. INSPECT DRIVE PLATE & RING GEAR SUB–ASSY

(a) Set up a dial indicator and measure the drive plate runout.
(b) Check the damage of the ring gear.
Maximum runout: 0.20 mm (0.0079 in.)

If the runout is not within the specification or ring gear is damaged, replace the drive plate.

TRANSMISSION VALVE BODY ASSY (ATM)

400LN–01

REPLACEMENT

1. REMOVE ENGINE UNDER COVER LH

2. DRAIN AUTOMATIC TRANSAXLE FLUID

(a) Remove the drain plug, gasket and drain ATF.

(b) Install a new gasket and drain plug.

Torque: 17.5 N·m (178 kgf·cm, 13 ft·lbf)

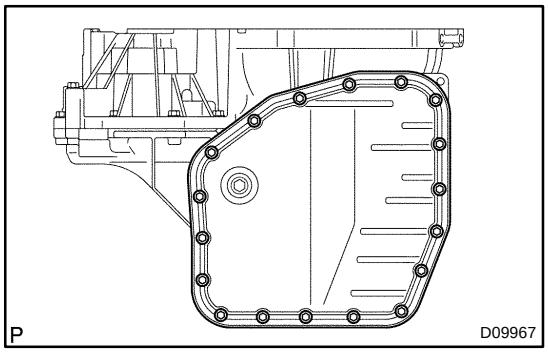

3. REMOVE AUTOMATIC TRANSAXLE OIL PAN SUB–ASSY

(a) Remove the 18 bolts, oil pan and gasket.

NOTICE:

Some fluid will remain in the oil pan. Remove all pan bolts, and carefully remove the oil pan assembly. Discard the gasket.

(b) Remove the 2 magnets from oil pan.

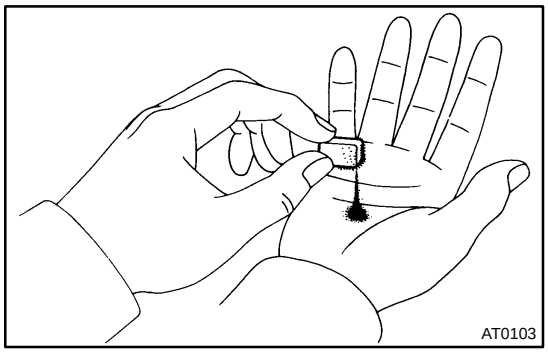

(c) Examine particles in pan.

(1) Remove the magnets and use them to collect any steel chips. Look carefully at the chips and particles in the pan and the magnet to anticipate what type of wear you will find in the transaxle.

Steel (magnetic): bearing, gear and plate wear

Brass (non–magnetic): bearing wear

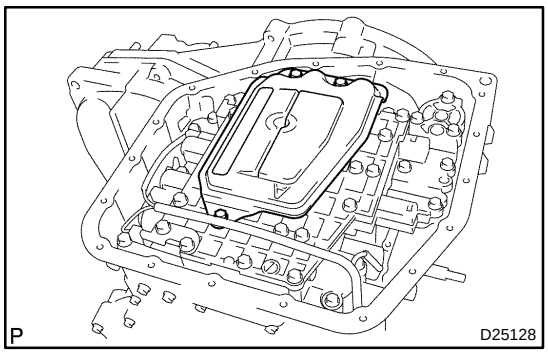

4. REMOVE VALVE BODY OIL STRAINER ASSY

(a) Remove the 3 bolts and oil strainer.

NOTICE:

Be careful as some fluid will come out with the oil strainer.

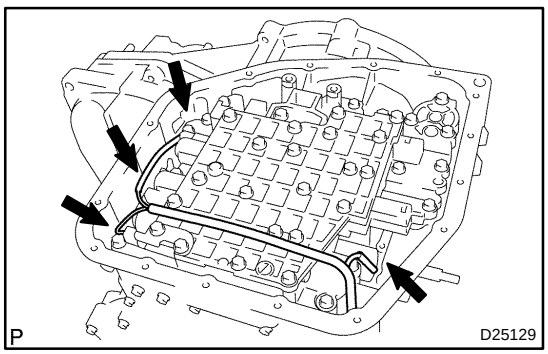

5. REMOVE TRANSMISSION VALVE BODY ASSY

(a) Disconnect the 4 solenoid connecters.

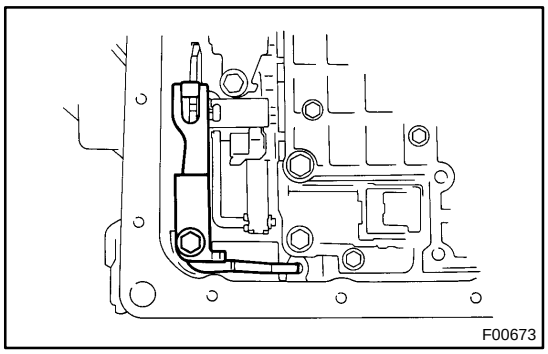

(b) Remove the bolt and manual detent spring.

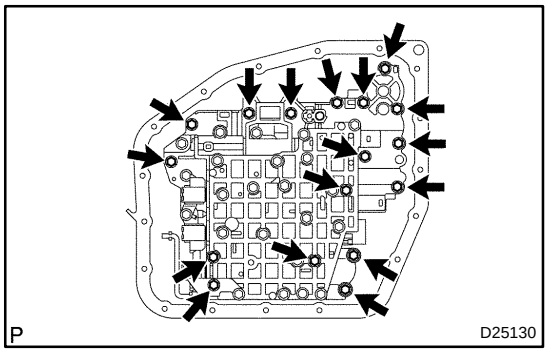

(c) Remove the 17 bolts.

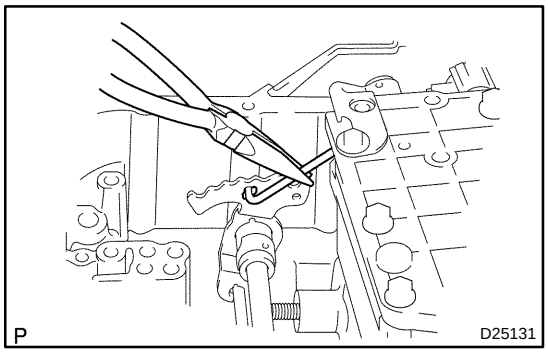

(d) While disconnecting the manual valve connecting rod from the manual valve lever, remove the valve body with the manual valve together.

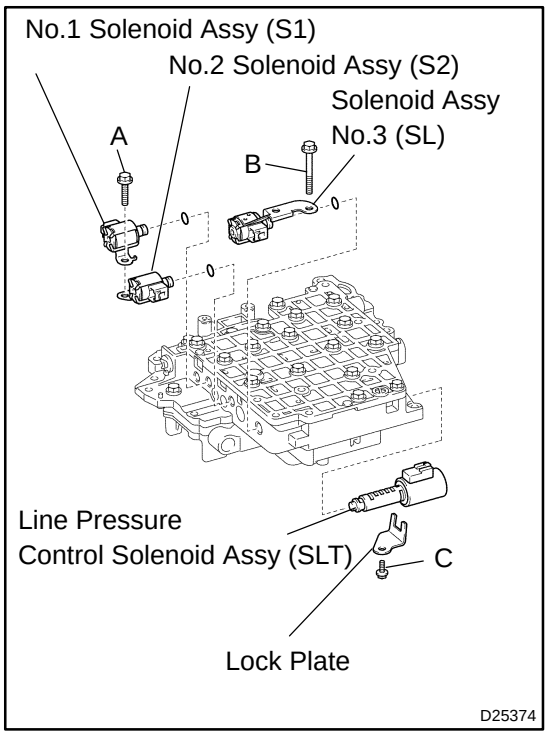

(e) Remove the 2 bolts and 3 solenoid valves.
(f) Remove the 3 O–rings from each of the solenoid valves.
(g) Remove the bolt, lock plate and line pressure control valve.

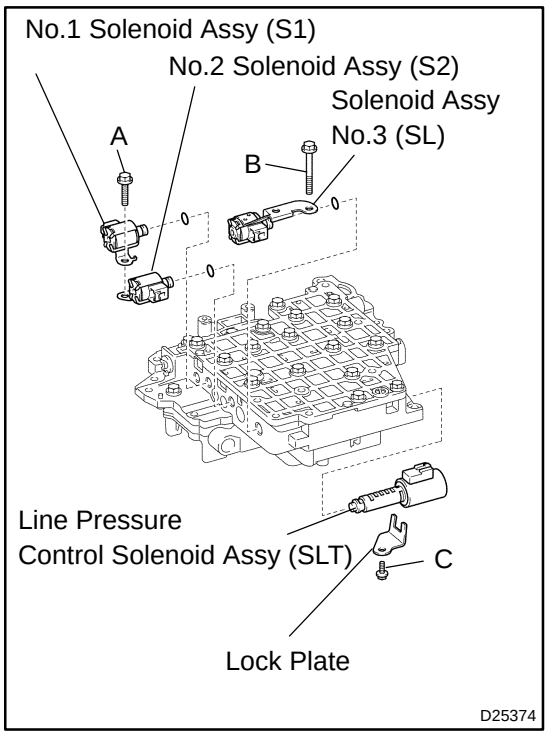

6. INSTALL TRANSMISSION VALVE BODY ASSY

(a) Coat 3 new O–rings with ATF and install them to each solenoid valves.

(b) Install the No.1 and No.2 solenoid valves with the bolt.

(c) Install the No.3 solenoid valve with the bolt.

(d) Install the line pressure control solenoid valve and lock plate with the bolt.

Torque:
Bolt A: 11 N·m (110 kgf·cm, 8 ft·lbf)
Bolt B: 11 N·m (110 kgf·cm, 8 ft·lbf)
Bolt C: 6.5 N·m (66 kgf·cm, 58 in.·lbf)
Bolt length:
Bolt A: 25 mm (0.984 in.)
Bolt B: 60 mm (2.362 in.)
Bolt C: 12 mm (0.472 in.)

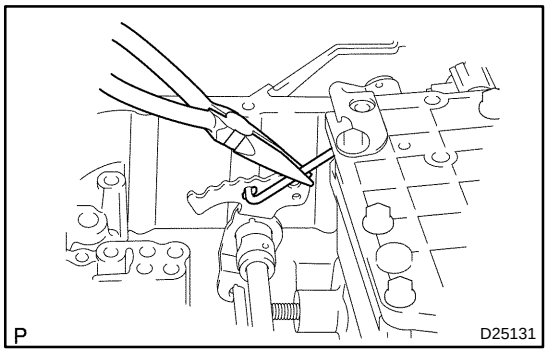

(e) While connecting the manual valve connecting rod to the manual valve lever, install the valve body with the manual valve together.

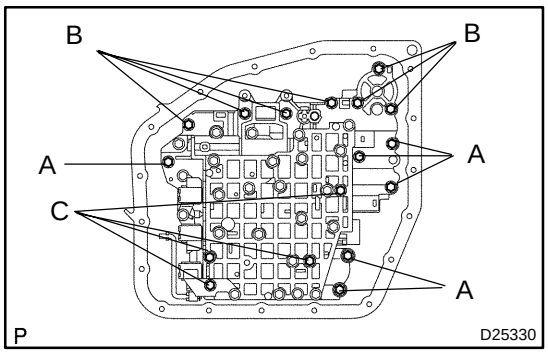

(f) Install the 17 bolts.

Bolt length:
Bolt A: 20 mm (0.79 in.)
Bolt B: 28 mm (1.10 in.)
Bolt C: 50 mm (1.97 in.)
Torque: 10 N·m (100 kgf·cm, 7 ft·lbf)

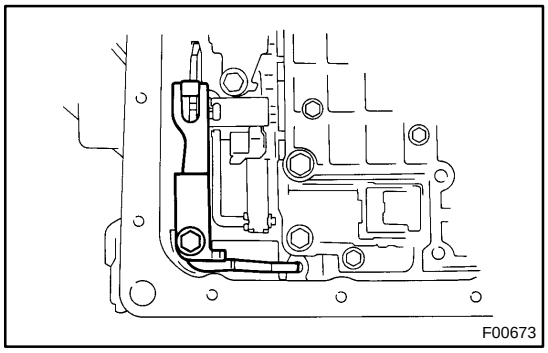

(g) Install the manual detent spring and bolt.

Torque: 10 N·m (100 kgf·cm, 7 ft·lbf)

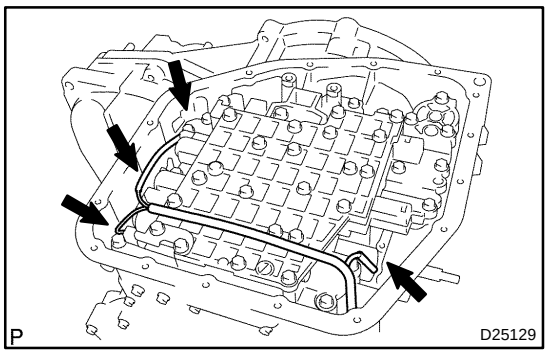

(h) Connect the 4 solenoid connectors.

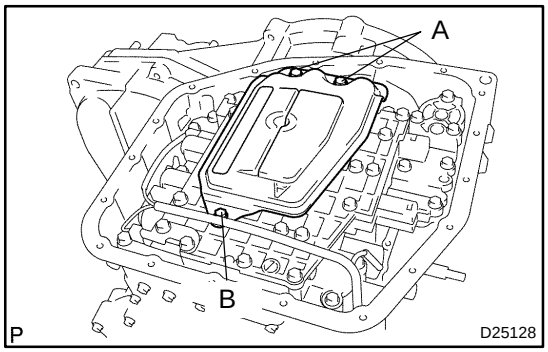

7. INSTALL VALVE BODY OIL STRAINER ASSY

(a) Install the oil strainer with the 3 bolts.

Bolt length:
A bolt: 12 mm (0.47 in.)
B bolt: 20 mm (0.79 in.)
Torque: 10 N·m (100 kgf·cm, 7 ft·lbf)

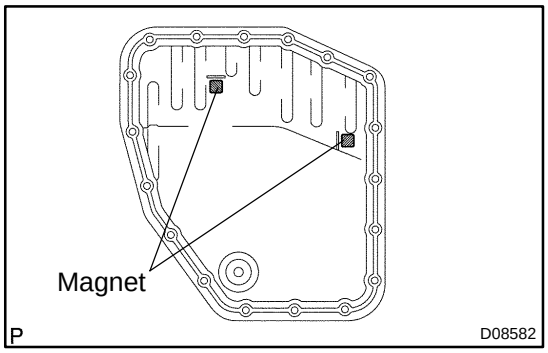

8. INSTALL AUTOMATIC TRANSAXLE OIL PAN SUB–ASSY

(a) Install the 2 magnets to the oil pan.

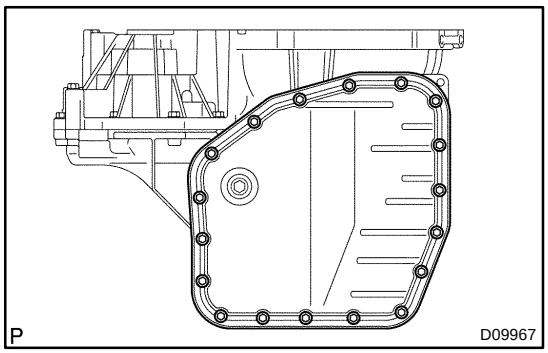

(b) Install a new gasket to the oil pan and install them to the transaxle.

(c) Install the 18 bolts.

Torque: 5.3 N·m (55 kgf·cm, 48 in.·lbf)

9. INSTALL ENGINE UNDER COVER LH

10. ADD AUTOMATIC TRANSAXLE FLUID

11. INSPECT AUTOMATIC TRANSAXLE FLUID (See page 40–2)

TRANSMISSION WIRE (ATM)

400LO–01

REPLACEMENT

1. REMOVE TRANSMISSION VALVE BODY ASSY (See page 40–23)

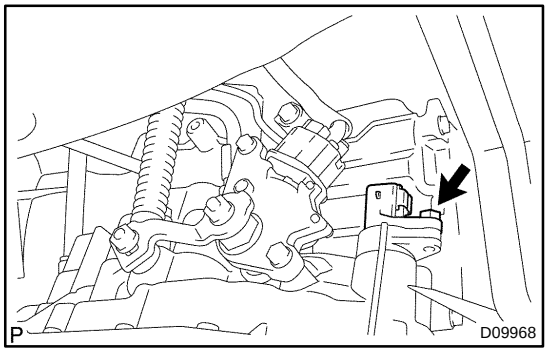

2. REMOVE TRANSMISSION WIRE

(a) Disconnect the transmission wire connector.

(b) Removal the bolt and transmission wire.

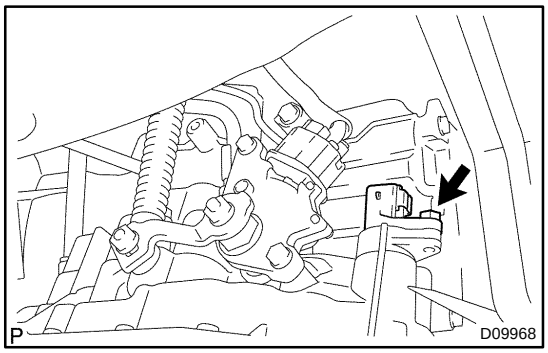

3. INSTALL TRANSMISSION WIRE

(a) Coat a O–ring with ATF.

(b) Install the transmission wire and bolt.

Torque: 5.4 N·m (55 kgf·cm, 48 in.·lbf)

(c) Connect the transmission wire connector.

4. INSTALL TRANSMISSION VALVE BODY ASSY (See page 40–23)

MANUAL TRANSAXLE ASSY

COMPONENTS

4107C–01

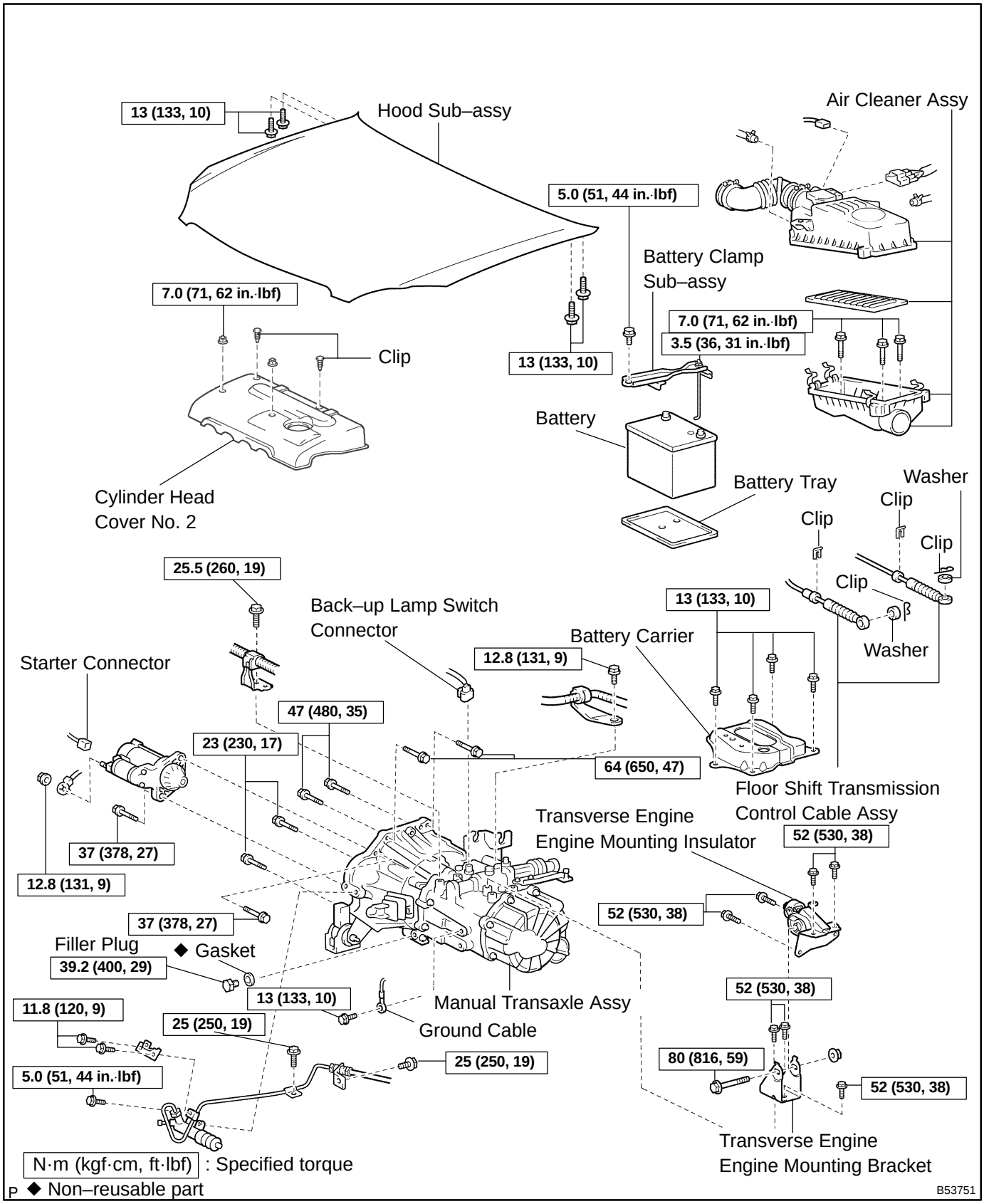

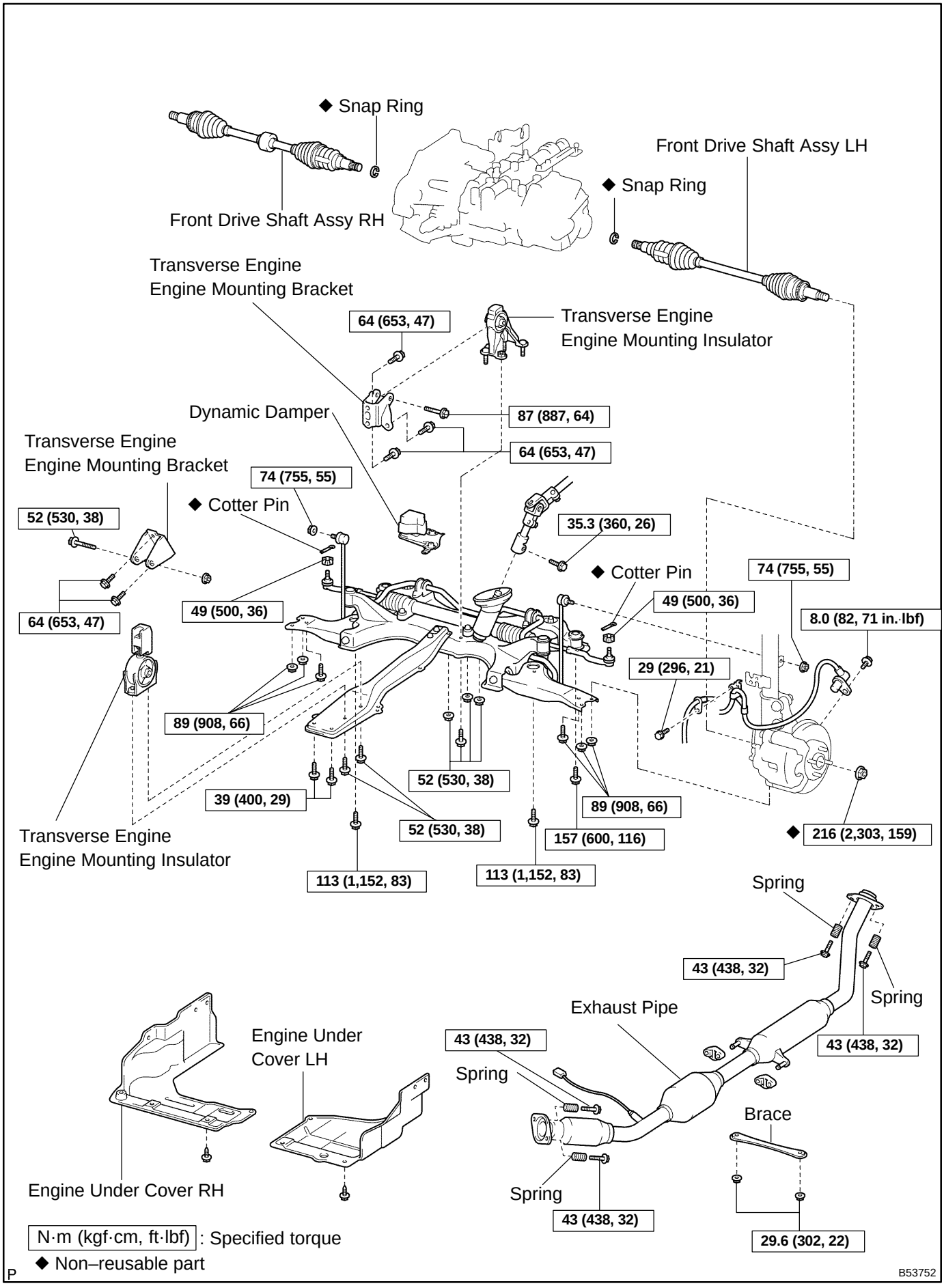
◆ Snap Ring
Front Drive Shaft Assy RH
Front Drive Shaft Assy LH
◆ Snap Ring
Transverse Engine
Engine Mounting Bracket
64 (653, 47)
Transverse Engine
Engine Mounting Insulator
Dynamic Damper
87 (887, 64)
64 (653, 47)
Transverse Engine
Engine Mounting Bracket
74 (755, 55)
◆ Cotter Pin
52 (530, 38)
35.3 (360, 26)
◆ Cotter Pin
74 (755, 55)
49 (500, 36)
64 (653, 47)
49 (500, 36)
8.0 (82, 71 in.·lbf)
29 (296, 21)
89 (908, 66)
52 (530, 38)
39 (400, 29)
89 (908, 66)
52 (530, 38)
157 (600, 116)
◆ 216 (2,303, 159)
Transverse Engine
Engine Mounting Insulator
113 (1,152, 83)
113 (1,152, 83)
Spring
43 (438, 32)
Spring
Exhaust Pipe
43 (438, 32)
43 (438, 32)
Engine Under
Cover LH
Spring
Brace
Engine Under Cover RH
Spring
43 (438, 32)
29.6 (302, 22)
N·m (kgf·cm, ft·lbf) : Specified torque
◆ Non–reusable part
P
B53752

4107L–01

OVERHAUL

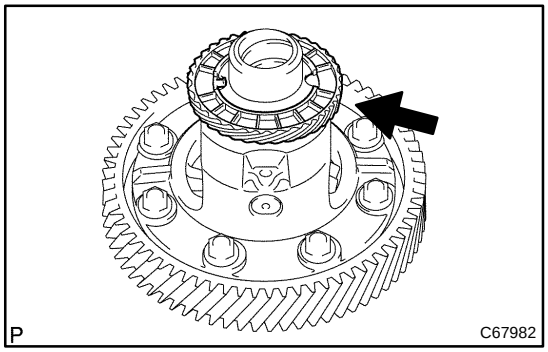

1. REMOVE SPEEDOMETER DRIVE (MTM) GEAR

(a) Remove the speedometer drive (MTM) gear from the front differential case.

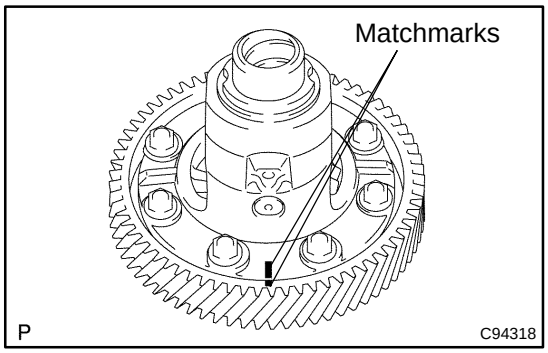

2. REMOVE FRONT DIFFERENTIAL RING GEAR

(a) Place matchmarks on the front differential ring gear and front differential case.

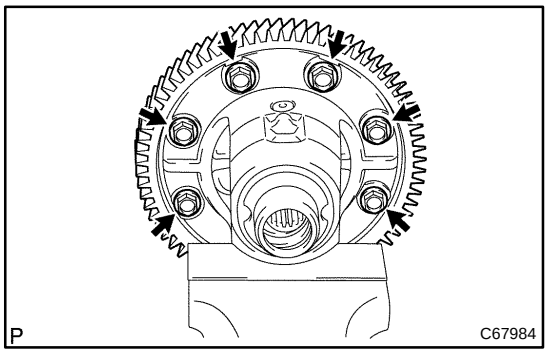

(b) Remove the 8 bolts. Using a hammer, remove the front differential ring gear.

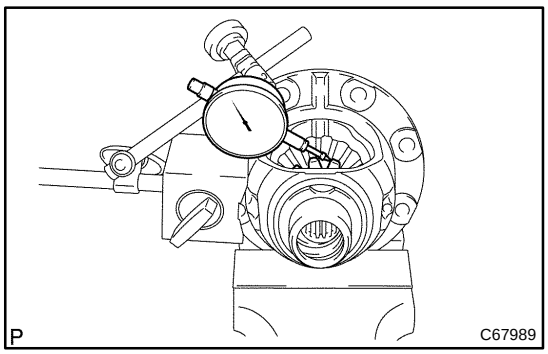

3. INSPECT FRONT DIFFERENTIAL SIDE GEAR BACKLASH

(a) Fixing the front differential pinion from the front differential case side. Using a dial indicator, measure the backlash of the front differential side gear.

Standard backlash:

0.05 – 0.20 mm (0.0020 – 0.0079 in.)

If the backlash is not within the specification, install the connect side gear thrust washers.

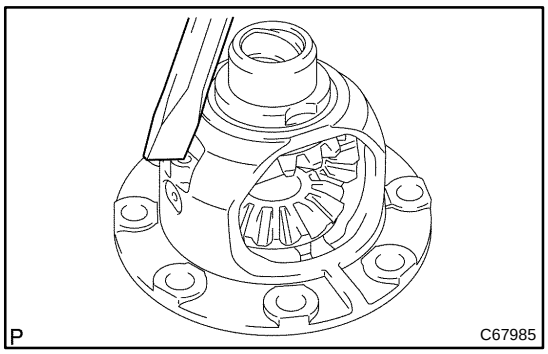

4. REMOVE FRONT DIFFERENTIAL PINION SHAFT STRAIGHT PIN

(a) Using a chisel and a hammer, loosen the staked part of the front differential case.

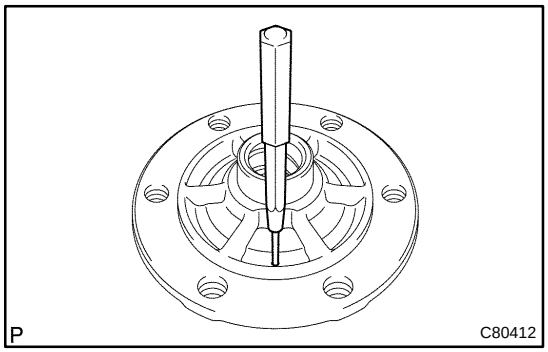

(b) Using a pin punch (ϕ 3 mm) and a hammer, remove the front differential pinion shaft straight pin from the front differential case.

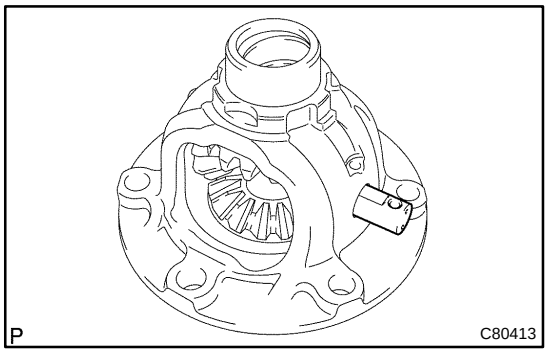

5. REMOVE FRONT DIFFERENTIAL PINION SHAFT NO.1

(a) Remove the front differential pinion shaft No.1 from the front differential case.

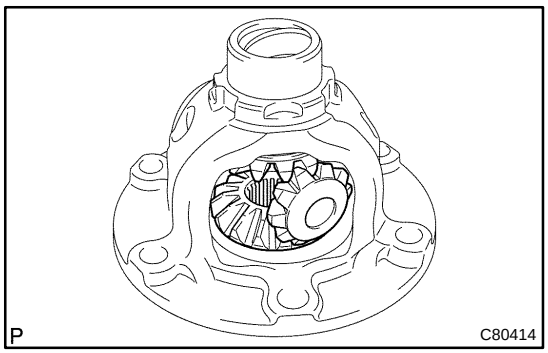

6. REMOVE FRONT DIFFERENTIAL SIDE GEAR

(a) Remove the 2 front differential pinions, 2 front differential pinion thrust washers, 2 front differential side gear thrust washers and 2 front differential side gears from the front differential case.

HINT:
Turning the front differential pinion, remove the 2 pinions and side gear.

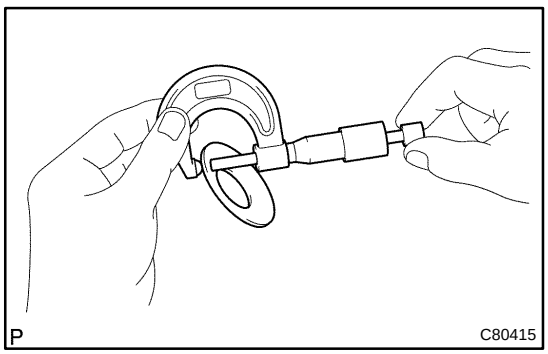

7. INSPECT FRONT DIFFERENTIAL PINION THRUST WASHER

(a) Using a micrometer, measure the thickness of the front differential pinion thrust washer.

Minimum thickness: 0.92 mm (0.0362 in.)

If the clearance is below the minimum, replace the front differential pinion thrust washer.

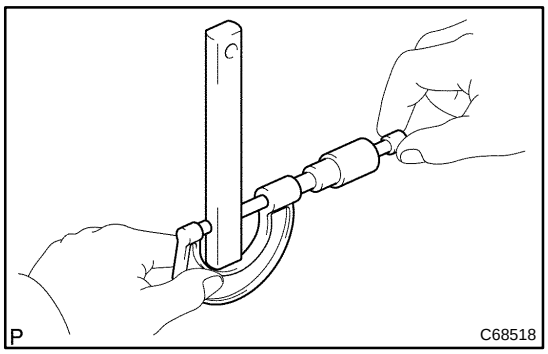

8. INSPECT FRONT DIFFERENTIAL PINION SHAFT NO.1

(a) Using a micrometer, measure the the outer diameter of the front differential pinion shaft No.1.

Minimum outer diameter: 16.982 mm (0.6686 in.)

If the outer diameter is less than the minimum, replace the front differential pinion shaft No.1.

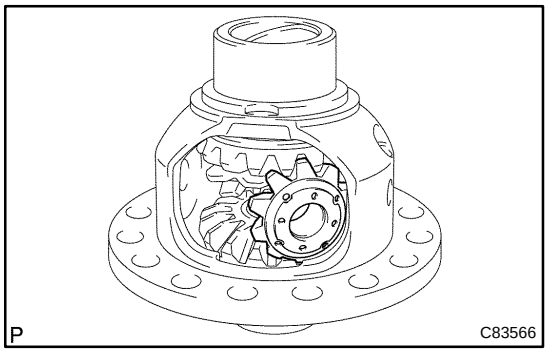

9. INSTALL FRONT DIFFERENTIAL SIDE GEAR

(a) Coat the sliding and rotating surface of the 2 front differential side gears with MP grease.

(b) Install the 2 front differential side gear thrust washers to the 2 front differential side gear.

HINT:

Install the front differential side gear thrust washer that has the same thickness as the removed one.

(c) Install the 2 front differential side gears, 2 front differential pinions and 2 front differential side gear thrust washers to the front differential case.

HINT:

Turning the front differential pinion, install the 2 front differential pinions with front differential case.

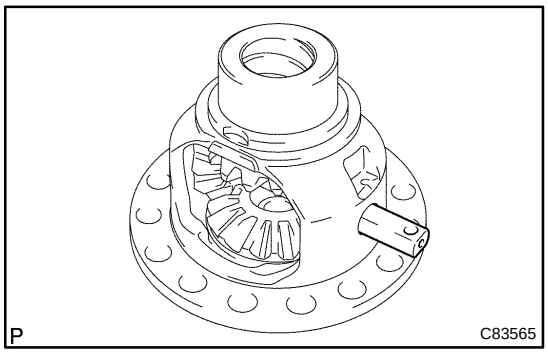

10. INSTALL FRONT DIFFERENTIAL PINION SHAFT NO.1

(a) Coat the rotating surface of the front differential pinion shaft No.1 with gear oil.

(b) Install the front differential pinion shaft No.1 to the front differential case so that the hole for the front differential pinion shaft straight pin is aligned with the hole in the front differential case.

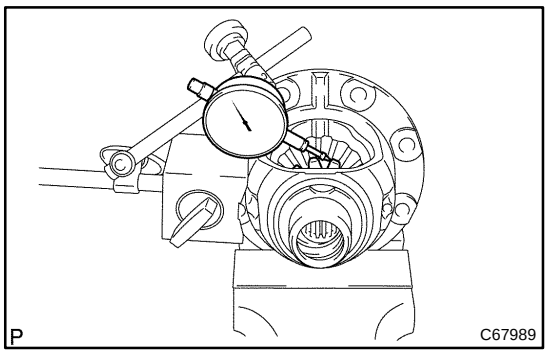

11. ADJUST FRONT DIFFERENTIAL SIDE GEAR BACKLASH

(a) Fixing the front differential pinion to the front differential case side. Using a dial indicator, measure the front differential side gear backlash.

Standard backlash:

0.05 – 0.20 mm (0.0020 – 0.0079 in.)

If the backlash is out of specification, replace the side gear thrust washer.

Thrust washer thickness:

Part No.	Thickness: mm (in.)
41361 – 22140	0.95 (0.0374)
41361 – 22020	1.00 (0.0394)
41361 – 22150	1.05 (0.0413)
41361 – 22030	1.10 (0.0433)
41361 – 22160	1.15 (0.0453)
41361 – 22040	1.20 (0.0472)

HINT:

- Because the thrust washer does not have any identification mark, measure the front thickness with a micrometer to select a proper thrust washer.
- Select washers that has the same thickness as both the right and left.

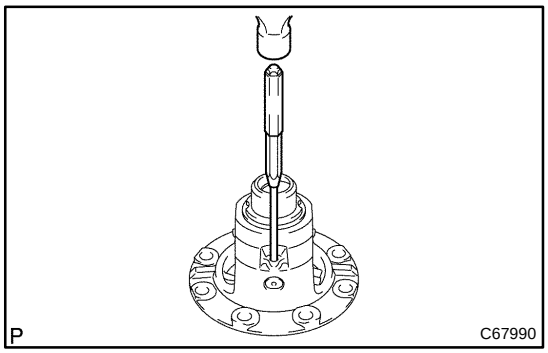

12. INSTALL FRONT DIFFERENTIAL PINION SHAFT STRAIGHT PIN

(a) Using a pin punch (ϕ 3 mm) and a hammer, install the front differential pinion shaft straight pin to the front differential case.

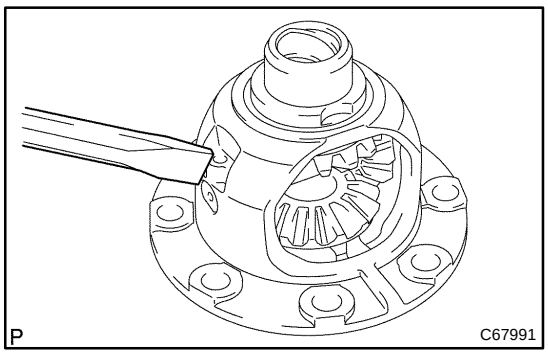

(b) Using a chisel and a hammer, stake the front case hole.

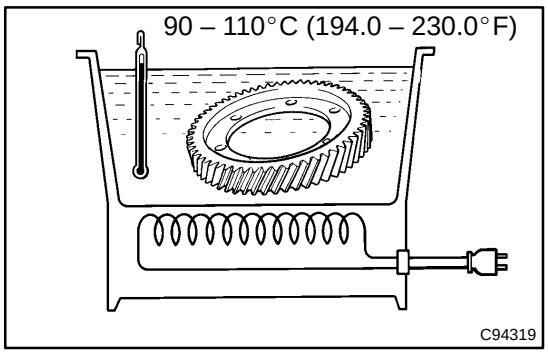

13. INSTALL FRONT DIFFERENTIAL RING GEAR

(a) Using a heater, heat the front differential ring gear to 90 – 110°C (194.0 – 230.0°F)

(b) Clean the contact surface of the front differential case.

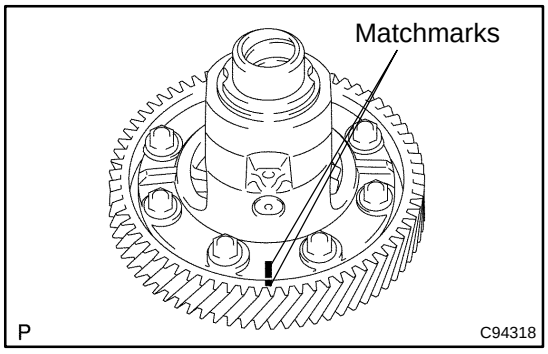

(c) Align the both matchmarks, quickly install the 8 bolts with the front differential ring gear to the front differential case.
Torque: 77.4 N·m (789 kgf·cm, 57 ft·lbf)

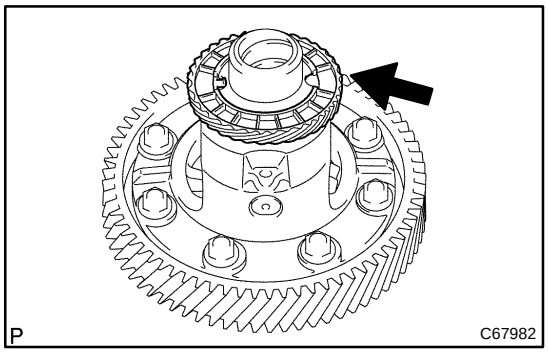

14. INSTALL SPEEDOMETER DRIVE (MTM) GEAR

(a) Install the speedometer drive (MTM) gear to the front differential case.

DIFFERENTIAL CASE ASSY (C59)

COMPONENTS

4107K–01

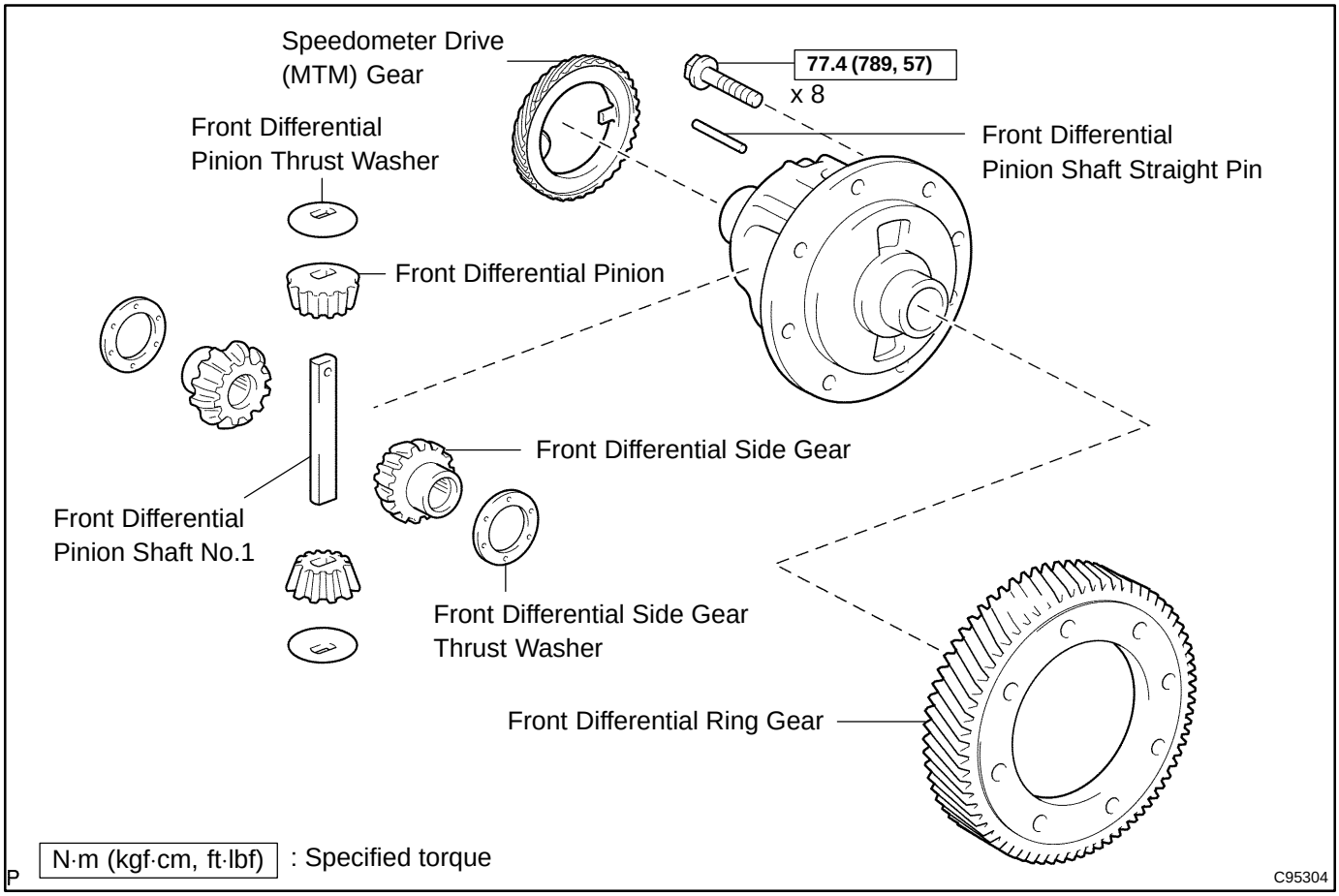

FLOOR SHIFT CABLE TRANSMISSION CONTROL SHIFT

41078–02

REPLACEMENT

HINT:

COMPONENTS: See page 41–5

1. REMOVE AIR CONDITIONER UNIT ASSY (See page 55–17)

HINT:

Refer to the instructions for removal of the air conditioner unit assy.

2. SEPARATE AIR BAG SENSOR ASSY CENTER

(a) Remove the 3 bolts, separate the airbag sensor assy center.

3. REMOVE EXHAUST PIPE ASSY (See page 15–2)

4. REMOVE FRONT FLOOR HEAT INSULATOR NO.1

(a) Remove the 3 nuts and heat insulator No.1.

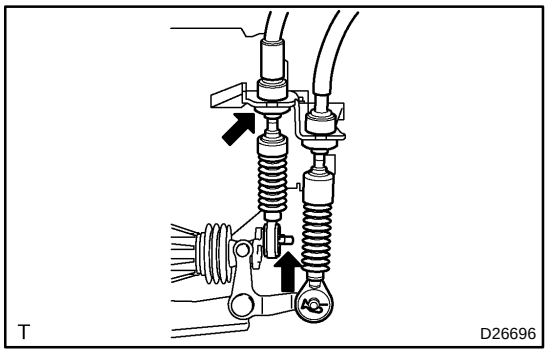

5. REMOVE FLOOR SHIFT CABLE TRANSMISSION CONTROL SHIFT

(a) Remove the clip and washer, separate the top of the shift cable from the transaxle.

(b) Remove the clip, separate the shift cable from the control cable bracket.

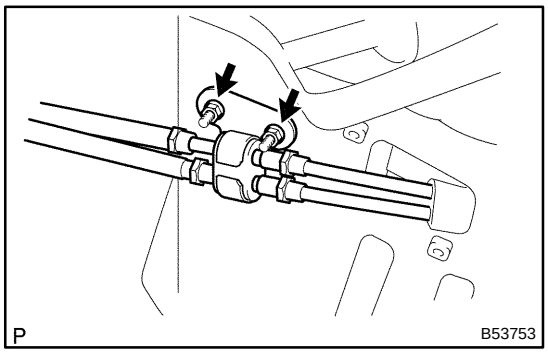

(c) Remove the 2 nuts and clamp.

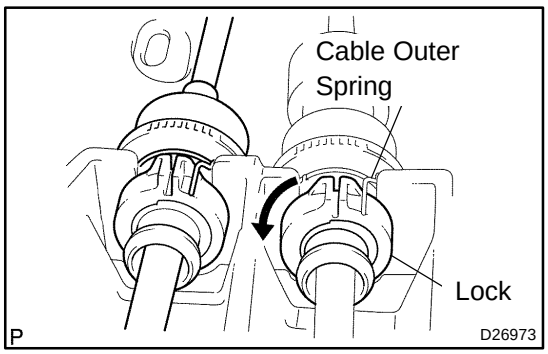

(d) Using a screwdriver, release the cable outer spring.

(e) Turn the lock, separate the shift cable from the shift lever retainer.

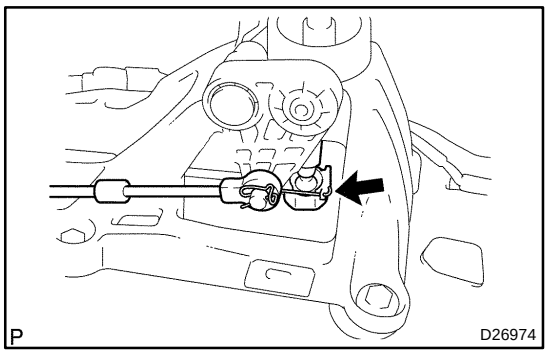

(f) Separate the end of the shift cable from the shift lever assy.

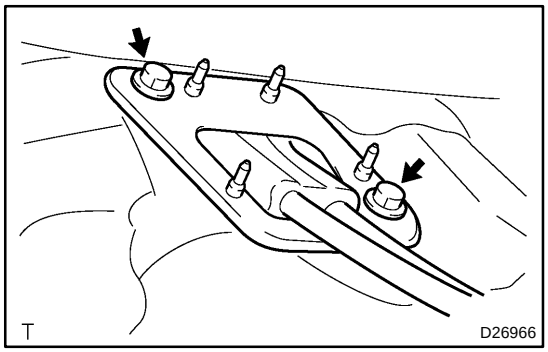

(g) Remove the 2 bolts and retainer from the floor.
(h) Pull out the control cable assy from the floor.

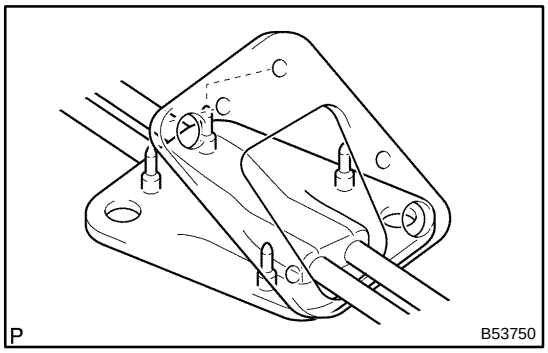

(i) Remove the retainer from the grommet.

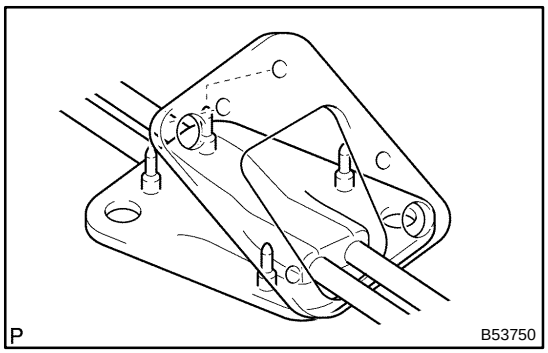

6. INSTALL FLOOR SHIFT CABLE TRANSMISSION CONTROL SHIFT

(a) Put the control cable assy through the floor hole and retainer.
(b) Install the retainer to the grommet.

NOTICE:
Fit 4 projections of the grommet into 4 holes of the retainer.

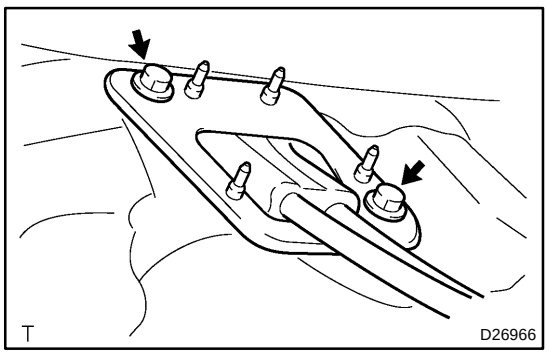

(c) Install the control cable assy with the 2 bolts.
Torque: 5.0 N·m (51 kgf·cm, 44 in.·lbf)

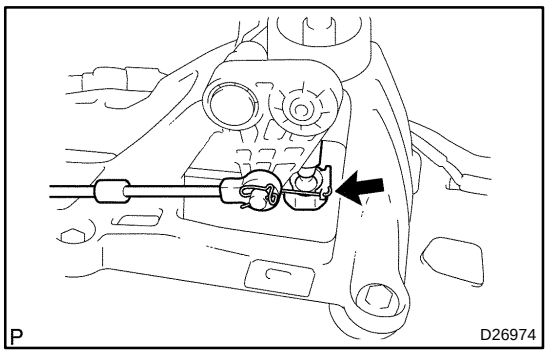

(d) Connect the end of the shift cable to the shift lever assy.

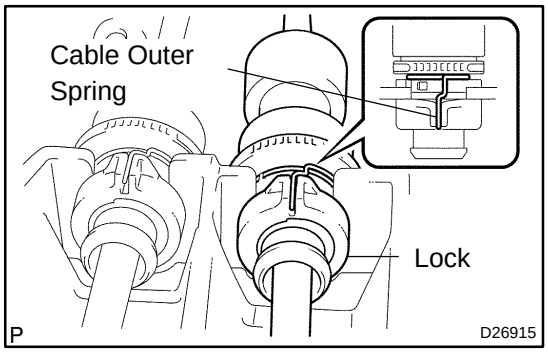

(e) Connect the shift cable to the retainer of shift lever assy, turn the lock.

NOTICE:

The projecting part of the lock should face upward when the shift cable is installed.

(f) Install the cable outer spring to the lock.

NOTICE:

Make sure that after installation the cable outer spring is moved to the place shown in the illustration.

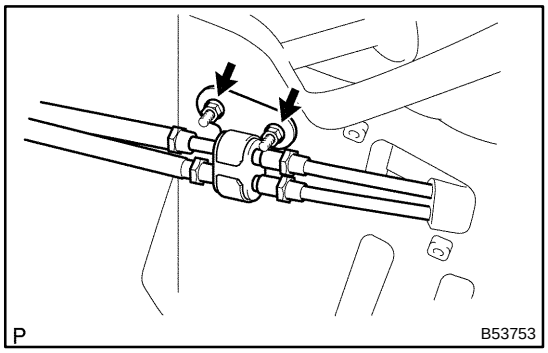

(g) Install the clamp with the 2 nuts.
Torque: 5.0 N·m (51 kgf·cm, 44 in.·lbf)

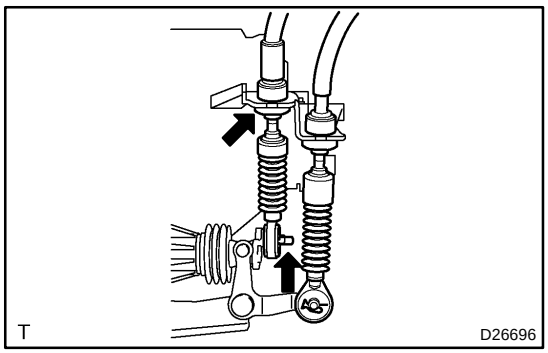

(h) Connect the shift cable to the control cable bracket, install a new clip.

(i) Connect the shift cable to the transaxle, install the washer and clip.

7. INSTALL FRONT FLOOR HEAT INSULATOR NO.1

(a) Install the heat insulator No.1 with the 3 nuts.
Torque: 5.5 N·m (56 kgf·cm, 49 in.·lbf)

8. INSTALL EXHAUST PIPE ASSY (See page 15–2)

9. CONNECT AIR BAG SENSOR ASSY CENTER

(a) Install the airbag sensor assy center with the 3 bolts.
Torque: 17.5 N·m (178 kgf·cm, 13 ft·lbf)

10. INSPECT SRS WARNING LIGHT (See page 05–424)

FLOOR SHIFT CABLE TRANSMISSION CONTROL SELECT

41079–02

REPLACEMENT

HINT:

COMPONENTS: See page 41–5

1. REMOVE AIR CONDITIONER UNIT ASSY (See page 55–17)

HINT:

Refer to the instructions for removal of the air conditioner unit assy.

2. SEPARATE AIR BAG SENSOR ASSY CENTER

(a) Remove the 3 bolts, separate the airbag sensor assy center.

3. REMOVE EXHAUST PIPE ASSY (See page 15–2)

4. REMOVE FRONT FLOOR HEAT INSULATOR NO.1

(a) Remove the 3 nuts and heat insulator No.1.

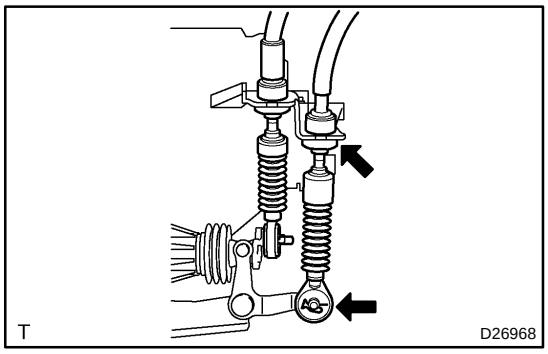

5. REMOVE FLOOR SHIFT CABLE TRANSMISSION CONTROL SELECT

(a) Remove the clip and washer, separate the top of the select cable from the transaxle.

(b) Remove the clip, separate the select cable from the control cable bracket.

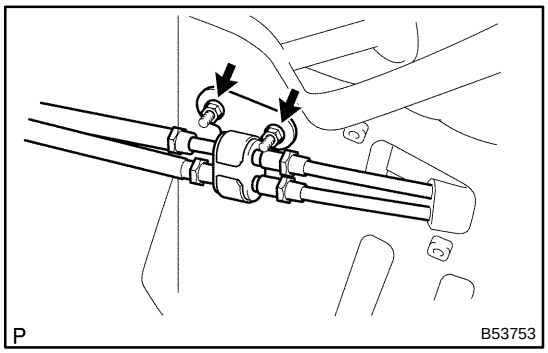

(c) Remove the 2 nuts and clamp.

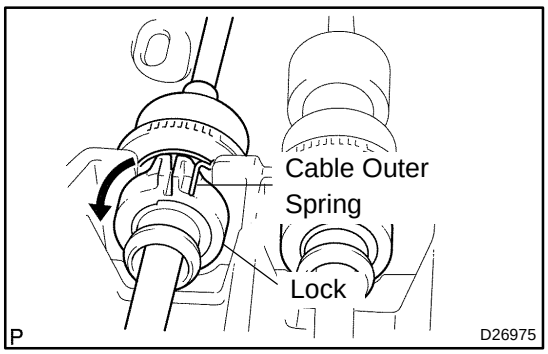

(d) Using a screwdriver, release the cable outer spring.

(e) Turn the lock, separate the select cable from the shift lever retainer.

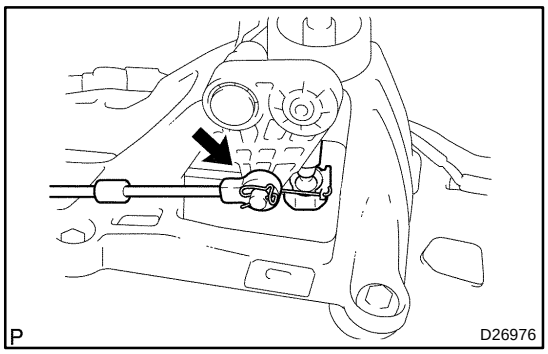

(f) Separate the end of the select cable from the shift lever assy.

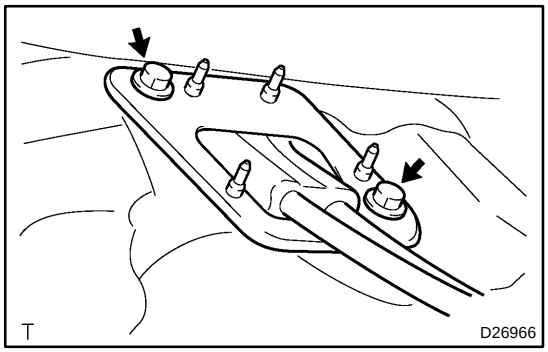

(g) Remove the 2 bolts and retainer from the floor.
(h) Pull out the control cable assy from the floor.

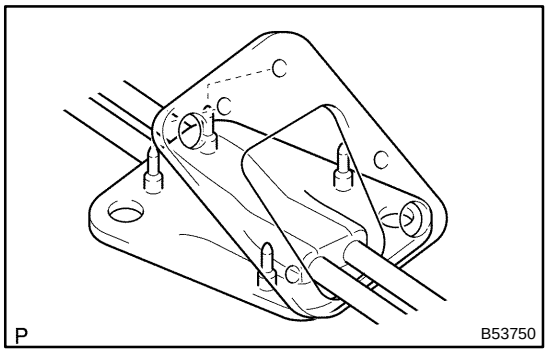

(i) Remove the retainer from the grommet.
(j) Remove the select cable from the grommet.

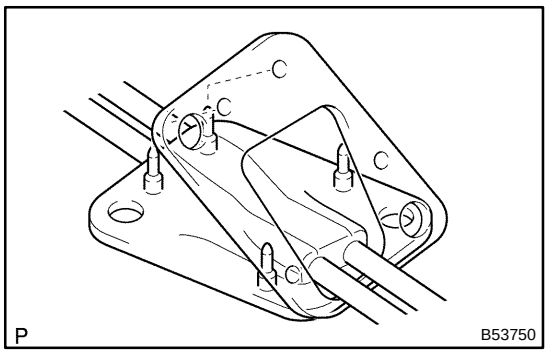

6. INSTALL FLOOR SHIFT CABLE TRANSMISSION CONTROL SELECT

(a) Install the select cable to the grommet.
(b) Install the retainer to the grommet.

NOTICE:

Fit 4 projections of the grommet into 4 holes of the retainer.

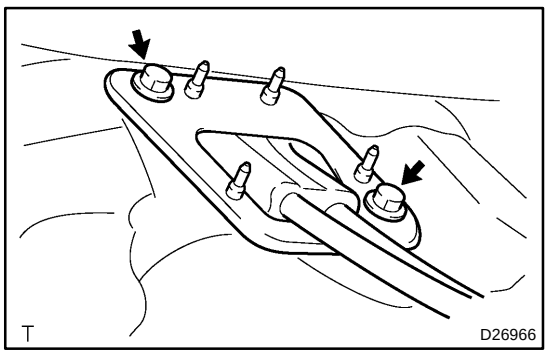

(c) Install the control cable assy with the 2 bolts.
Torque: 5.0 N·m (51 kgf·cm, 44 in.·lbf)

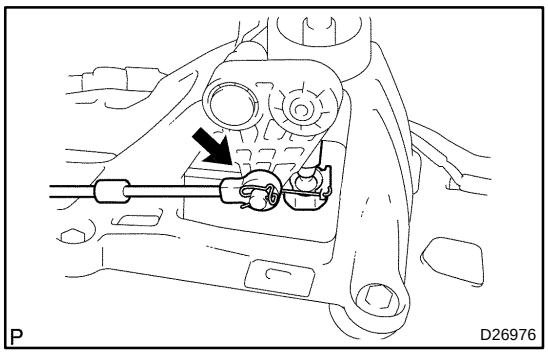

(d) Connect the end of the select cable to the shift lever assy.

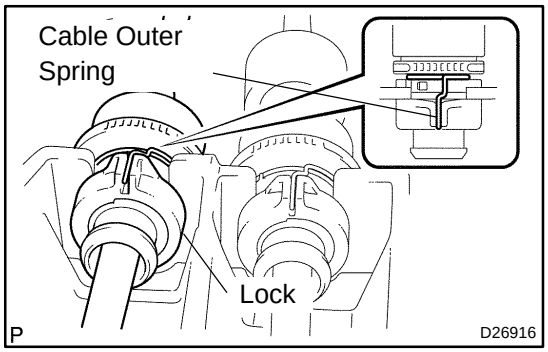

(e) Connect the select cable to the retainer of shift lever assy, turn the lock.

NOTICE:

The projecting part of the lock should face upward when the select cable is installed.

(f) Install the cable outer spring to the lock.

NOTICE:

Make sure that after installation the cable outer spring is moved to the place shown in the illustration.

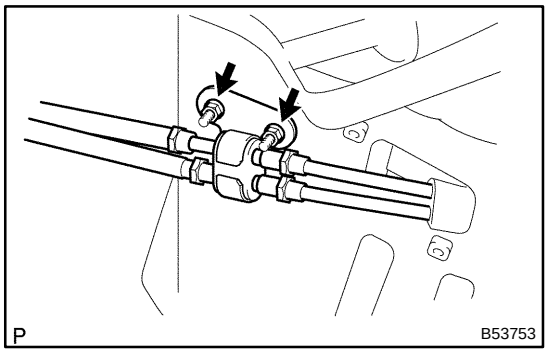

(g) Install the clamp with the 2 nuts.
Torque: 5.0 N·m (51 kgf·cm, 44 in.·lbf)

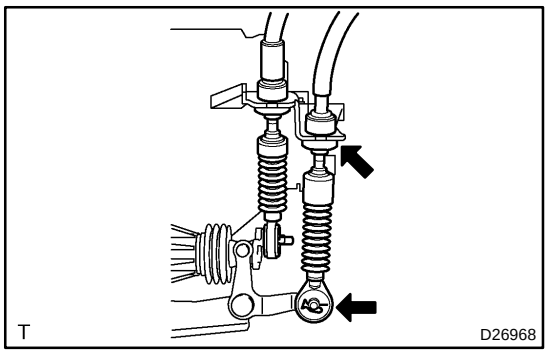

(h) Connect the select cable to the control cable bracket, install a new clip.

(i) Connect the select cable to the transaxle, install the washer and clip.

7. INSTALL FRONT FLOOR HEAT INSULATOR NO.1

(a) Install the heat insulator No.1 with the 3 nuts.

8. INSTALL EXHAUST PIPE ASSY (See page 15–2)

9. CONNECT AIR BAG SENSOR ASSY CENTER

(a) Install the airbag sensor assy center with the 3 bolts.
Torque: 17.5 N·m (178 kgf·cm, 13 ft·lbf)

10. INSPECT SRS WARNING LIGHT (See page 05–424)

FLOOR SHIFT SHIFT LEVER ASSY

COMPONENTS

4107A–01

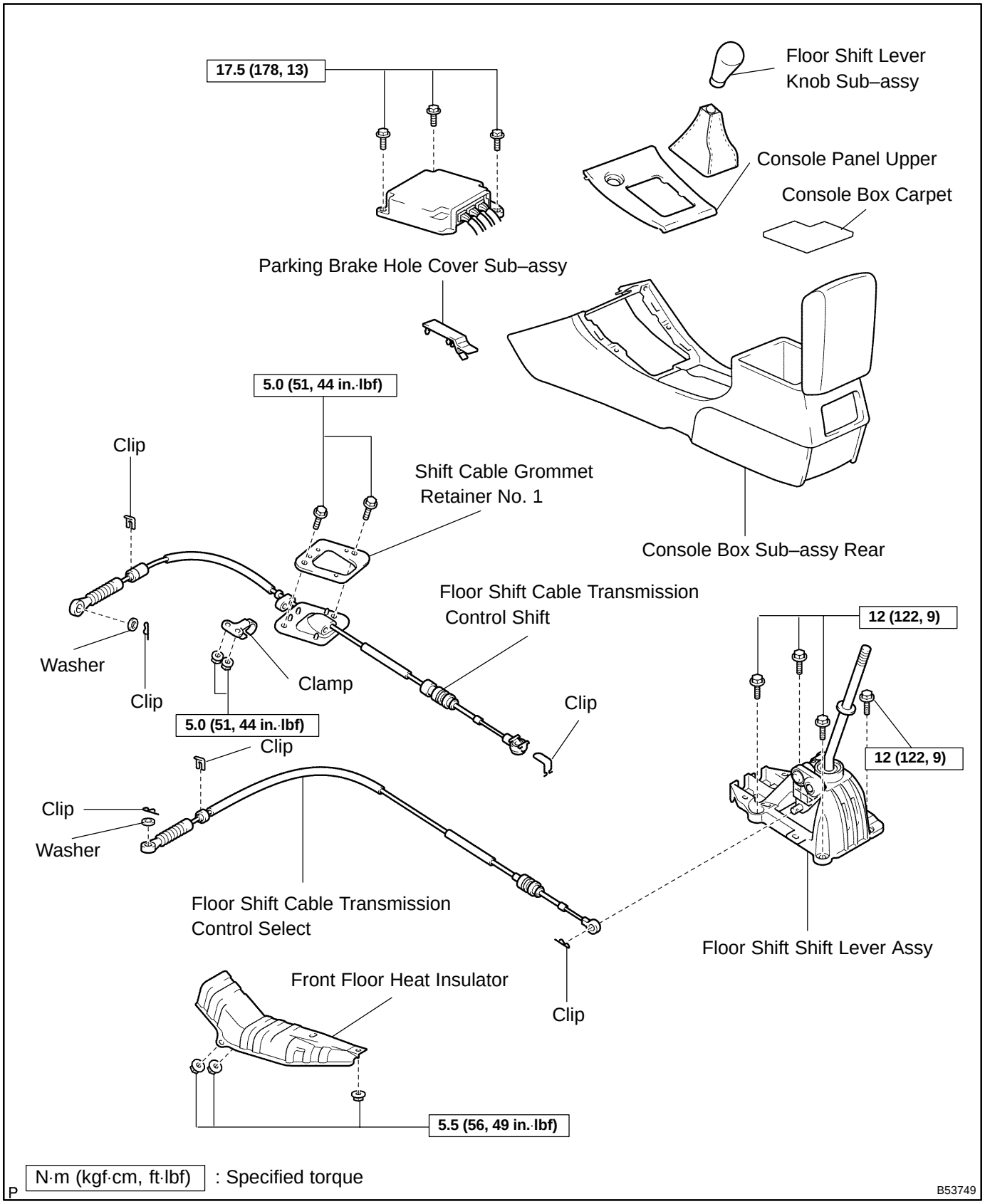

4107B–01

REPLACEMENT

HINT:

COMPONENTS: See page 41–5

1. **REMOVE FLOOR SHIFT SHIFT LEVER KNOB SUB–ASSY**
2. **REMOVE CONSOLE PANEL UPPER (See page 71–10)**
3. **REMOVE PARKING BRAKE HOLE COVER SUB–ASSY (See page 71–10)**
4. **REMOVE CONSOLE BOX SUB–ASSY REAR (See page 71–10)**

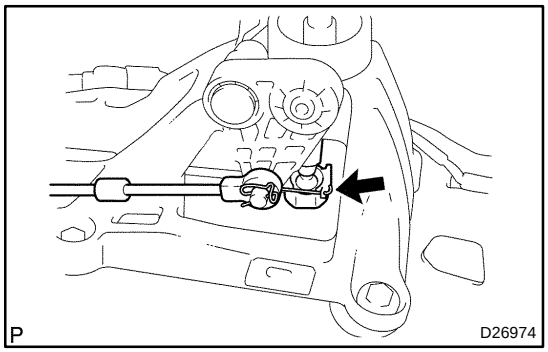

5. **SEPARATE FLOOR SHIFT CABLE TRANSMISSION CONTROL SHIFT**

(a) Separate the end of the shift cable from the shift lever assy.

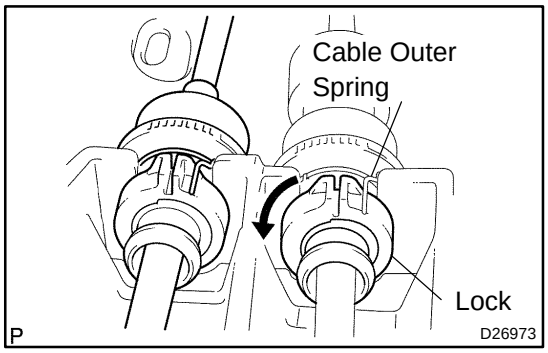

(b) Using a screwdriver, release the cable outer spring.

(c) Turn the lock, separate the shift cable from the shift lever retainer.

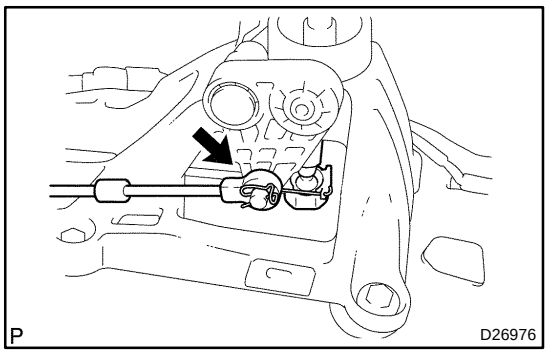

6. **SEPARATE FLOOR SHIFT CABLE TRANSMISSION CONTROL SELECT**

(a) Separate the end of the select cable from the shift lever assy.

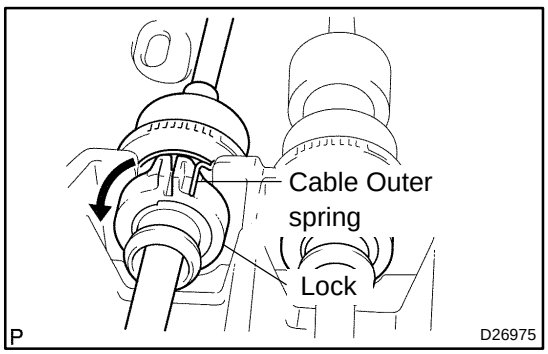

(b) Using a screwdriver, release the cable outer spring.

(c) Turn the lock, separate the select cable from the shift lever retainer.

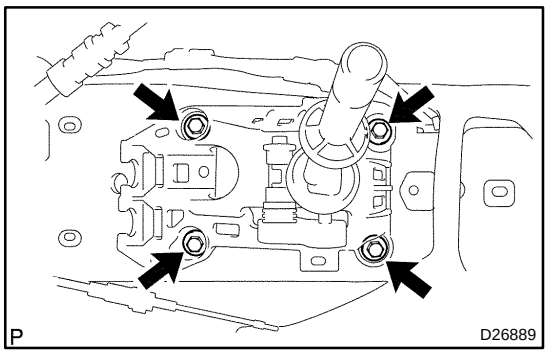

7. REMOVE FLOOR SHIFT SHIFT LEVER ASSY

(a) Remove the 4 bolts and shift lever assy.

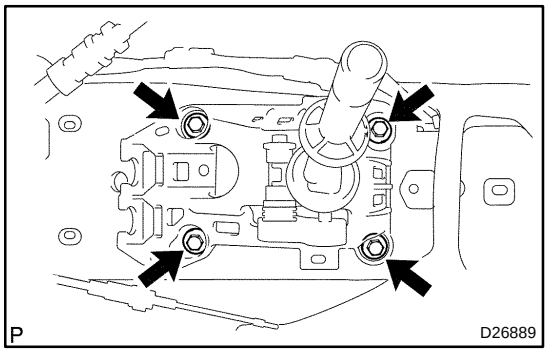

8. INSTALL FLOOR SHIFT SHIFT LEVER ASSY

(a) Install the shift lever assy with the 4 bolts.
Torque: 12 N·m (120 kgf·cm, 9 ft·lbf)

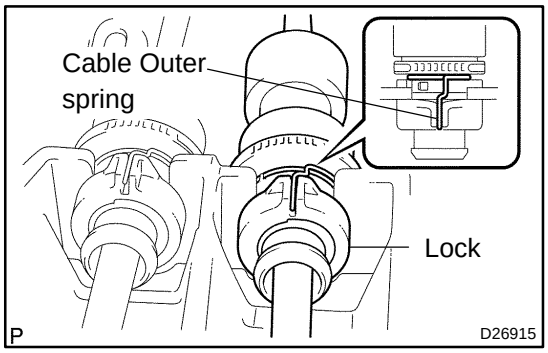

9. CONNECT FLOOR SHIFT CABLE TRANSMISSION CONTROL SHIFT

(a) Connect the shift cable to the retainer of shift lever assy, turn the lock.

NOTICE:

The projecting part of the lock should face upward when the shift cable is installed.

(b) Install the cable outer spring to the lock.

NOTICE:

Make sure that after installation the cable outer spring is moved to the place shown in the illustration.

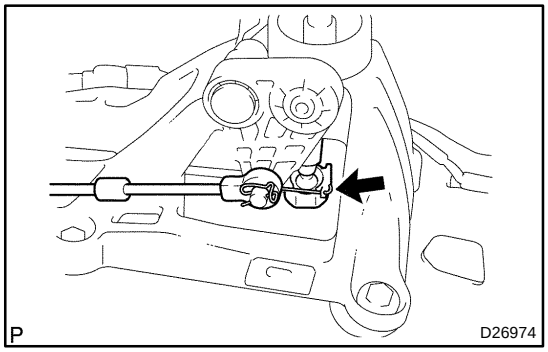

(c) Connect the end of the shift cable to the shift lever assy.

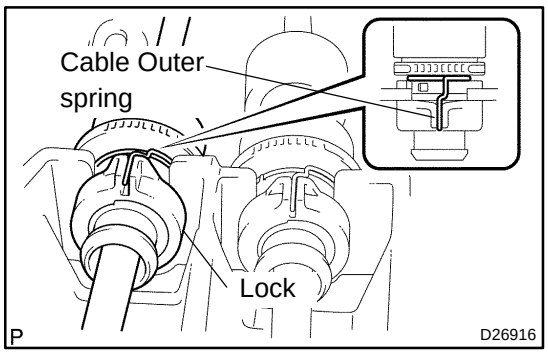

10. CONNECT FLOOR SHIFT CABLE TRANSMISSION CONTROL SELECT

(a) Connect the select cable to the retainer of shift lever assy, turn the lock.

NOTICE:

The projecting part of the lock should face upward when the select cable is installed.

(b) Install the cable outer spring to the lock.

NOTICE:

Make sure that after installation the cable outer spring is moved to the place shown in the illustration.

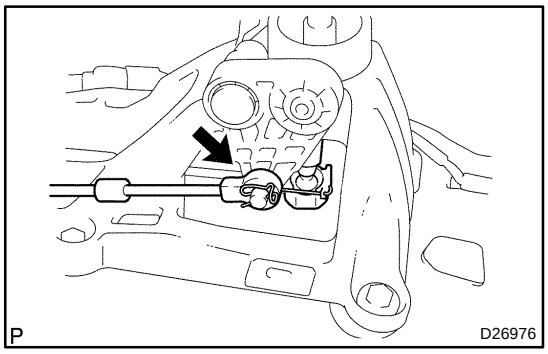

(c) Connect the end of the select cable to the shift lever assy.

FRONT DIFFERENTIAL OIL SEAL

41077–02

REPLACEMENT

1. **DRAIN MANUAL TRANSAXLE OIL**
   Torque: 39.2 N·m (400 kgf·cm, 29 ft·lbf)
2. **REMOVE FRONT WHEELS**
3. **REMOVE ENGINE UNDER COVER LH**
4. **REMOVE ENGINE UNDER COVER RH**
5. **DRAIN TRANSAXLE OIL**
6. **REMOVE FRONT DRIVE SHAFT ASSY LH (See page 30–6)**
   SST 09520–01010, 09520–24010 (09520–32040)
7. **REMOVE FRONT DRIVE SHAFT ASSY RH (See page 30–6)**
   SST 09520–01010, 09520–24010 (09520–32040)

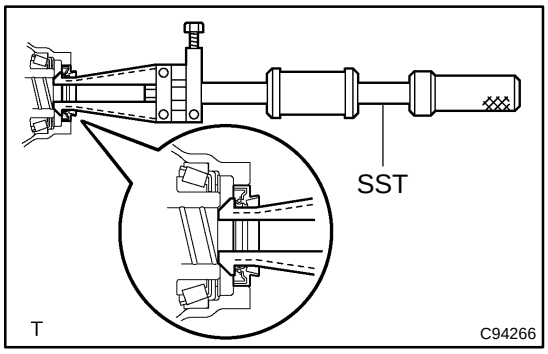

8. **REMOVE TRANSAXLE CASE OIL SEAL**
(a) Using SST, remove the transaxle case oil seal.
SST 09308–00010

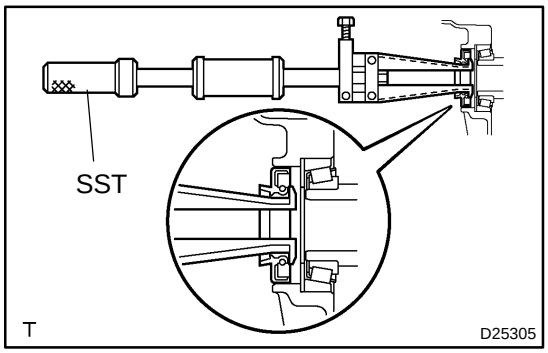

9. **REMOVE TRANSMISSION CASE OIL SEAL**
(a) Using SST, remove the transmission case oil seal.
SST 09308–00010

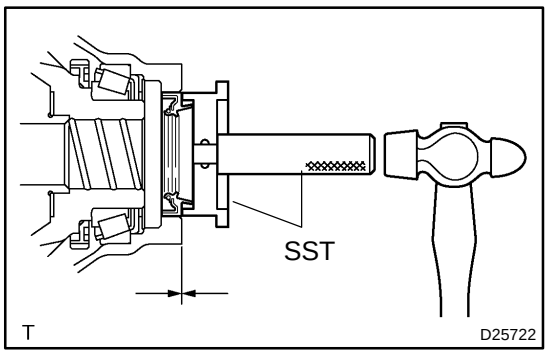

10. **INSTALL TRANSAXLE CASE OIL SEAL**
(a) Coat a new oil seal lip with MP grease.
(b) Using SST and a hammer, install the transaxle case oil seal.
SST 09554–14010, 09950–70010 (09951–07200)
Drive in depth: 1.9 ± 0.3 mm (0.075 ± 0.012 in.)

NOTICE:
Be careful not to damage the oil seal lip.

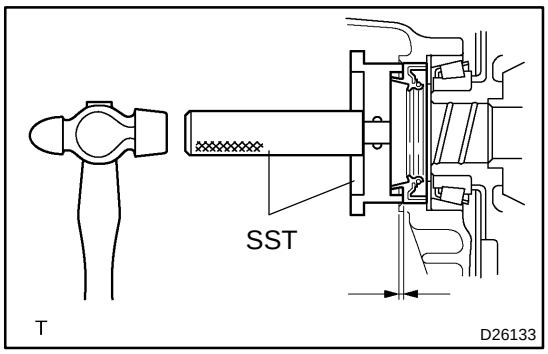

11. INSTALL TRANSMISSION CASE OIL SEAL

(a) Coat a new oil seal lip with MP grease.

(b) Using SST and a hammer, install the transmission case oil seal.

SST 09554–14010, 09950–70010 (09951–07200)

Drive in depth: 9.9 ± 0.3 mm (0.390 ± 0.012 in.)

NOTICE:

Be careful not to damage the oil seal lip.

12. INSTALL FRONT DRIVE SHAFT ASSY LH (See page 30–6)

13. INSTALL FRONT DRIVE SHAFT ASSY RH (See page 30–6)

14. INSTALL FRONT WHEELS

Torque: 103 N·m (1,050 kgf·cm, 76 ft·lbf)

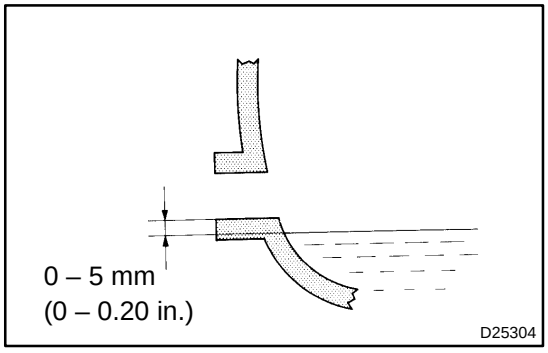

15. ADD MANUAL TRANSAXLE OIL

Oil grade: API GL–4 or GL–5

Viscosity: SAE 75 W–90

Capacity:1.9 liters (2.0 US qts, 1.7 Imp. qts)

Torque: 39.2 N·m (400 kgf·cm, 29 ft·lbf)

16. INSPECT AND ADJUST MANUAL TRANSAXLE OIL (See page 41–2)

17. INSPECT AND ADJUST FRONT WHEEL ALIGNMENT (See page 26–5)

18. CHECK ABS SPEED SENSOR SIGNAL (See page 05–297)

INPUT SHAFT ASSY (C59)

COMPONENTS

4107G–01

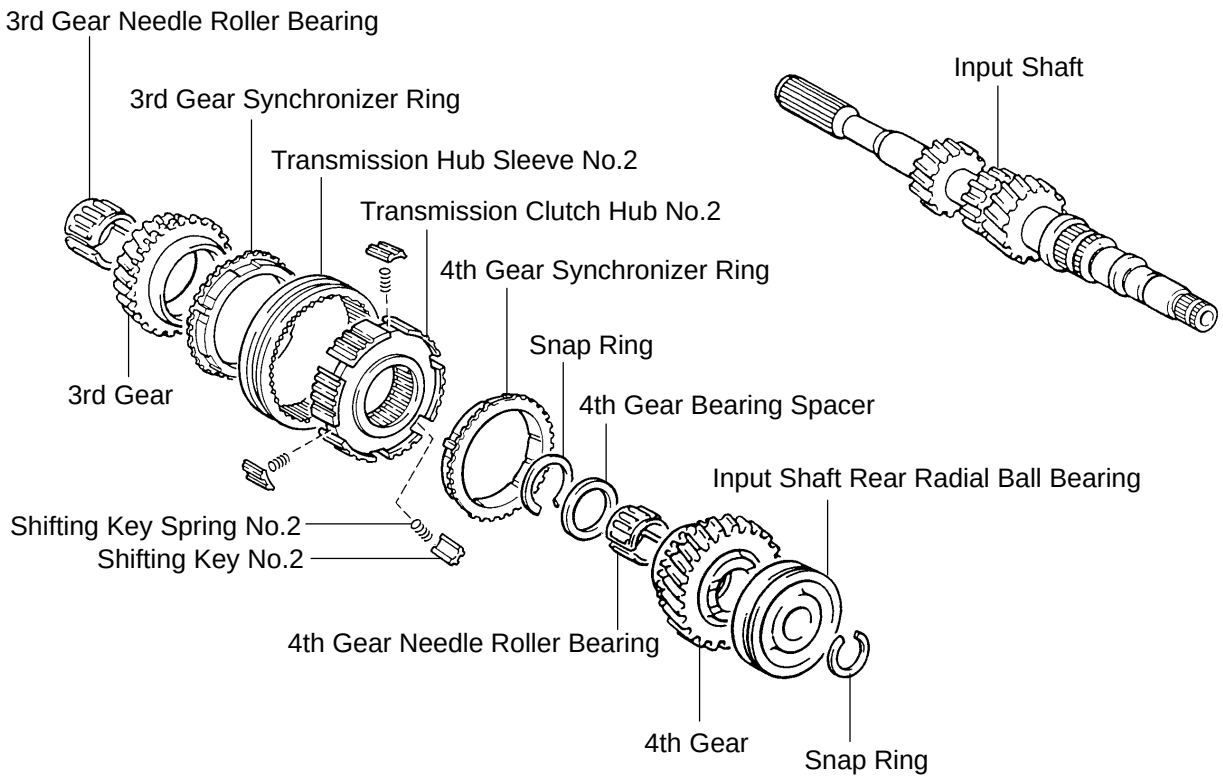

OVERHAUL

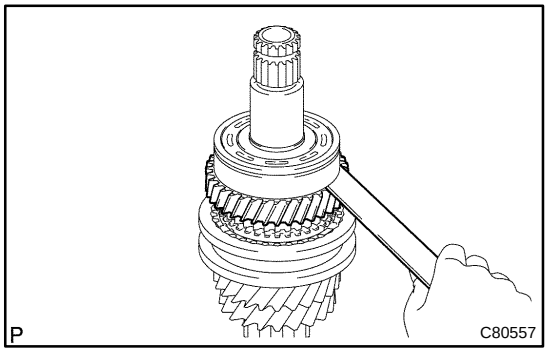

1. INSPECT 4TH GEAR THRUST CLEARANCE

(a) Using a feeler gauge, measure the 4th gear thrust clearance.

4th gear thrust clearance:

Standard clearance: mm (in.)	Maximum clearance: mm (in.)
0.10 – 0.55 (0.0039 – 0.0217)	0.55 (0.0217)

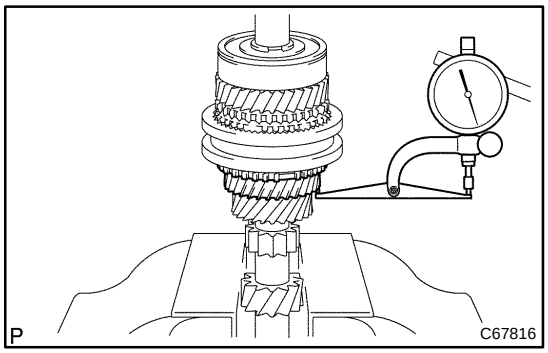

2. INSPECT 3RD GEAR THRUST CLEARANCE

(a) Using a dial indicator, measure the 3rd gear thrust clearance.

3rd gear thrust clearance:

Standard clearance: mm (in.)	Maximum clearance: mm (in.)
0.10 – 0.35 (0.0039 – 0.0138)	0.35 (0.0138)

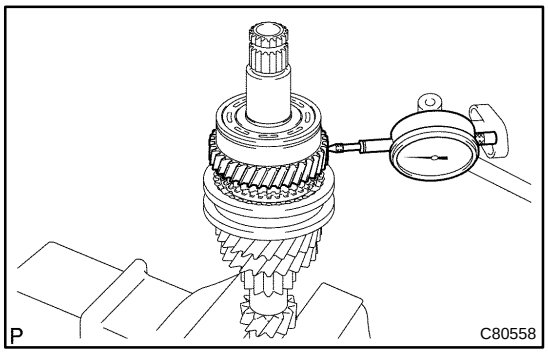

3. INSPECT 4TH GEAR RADIAL CLEARANCE

(a) Using a dial indicator, measure the 4th gear radial clearance.

4th gear radial clearance:

	Standard clearance: mm (in.)	Maximum clearance: mm (in.)
KOYO made	0.015 – 0.058 (0.0006 – 0.0023)	0.058 (0.0023)
NSK made	0.015 – 0.056 (0.0006 – 0.0022)	0.056 (0.0022)

If the clearance exceeds the maximum, replace the gear, needle roller bearing or shaft.

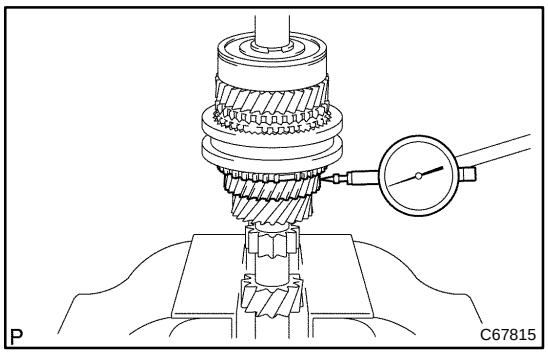

4. INSPECT 3RD GEAR RADIAL CLEARANCE

(a) Using a dial indicator, measure the 3rd gear radial clearance.

3rd gear radial clearance:

	Standard clearance: mm (in.)	Maximum clearance: mm (in.)
KOYO made	0.015 – 0.058 (0.0006 – 0.0023)	0.058 (0.0023)
NSK made	0.015 – 0.056 (0.0006 – 0.0022)	0.0056 (0.0022)

If the clearance exceeds the maximum, replace the gear, needle roller bearing or shaft.

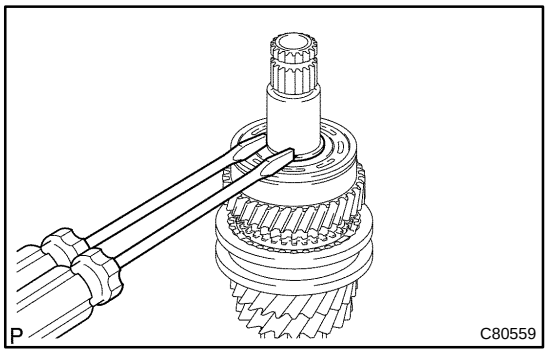

5. REMOVE 4TH GEAR

(a) Using 2 screwdrivers and a hammer, tap out the snap ring.

HINT:

Using a waste to prevent the snap ring from being scattered.

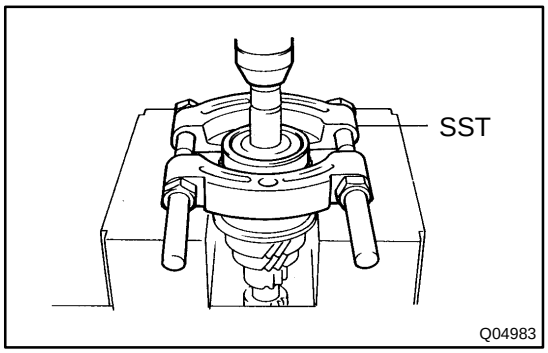

(b) Using SST and a press, remove the input shaft radial ball bearing rear and 4th gear from the input shaft.

SST 09950–00020

NOTICE:

- **Do not tighten SST excessively.**
- **Support the input shaft assy by hand so that it will not be dropped off.**

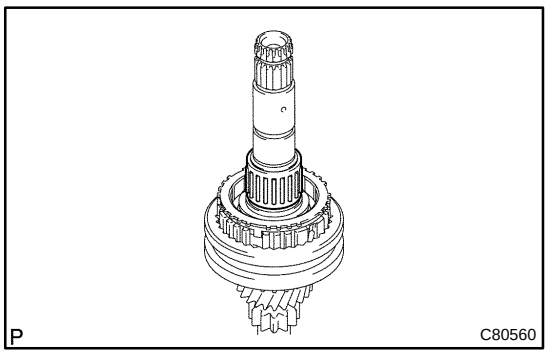

6. REMOVE 4TH GEAR NEEDLE ROLLER BEARING

(a) Remove the 4th gear needle roller bearing and 4th gear bearing spacer from the input shaft.

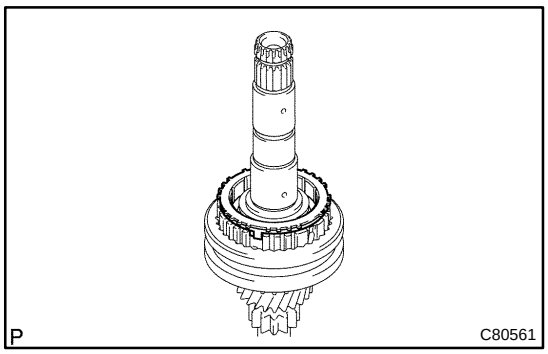

7. REMOVE 4TH GEAR SYNCHRONIZER RING

(a) Remove the 4th gear synchronizer ring from the transmission clutch hub No.2.

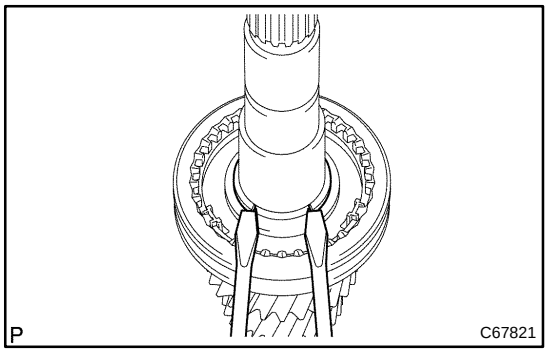

8. REMOVE 3RD GEAR

(a) Using 2 screwdrivers and a hammer, tap out the snap ring.

HINT:

Using a waste to prevent the snap ring from being scattered.

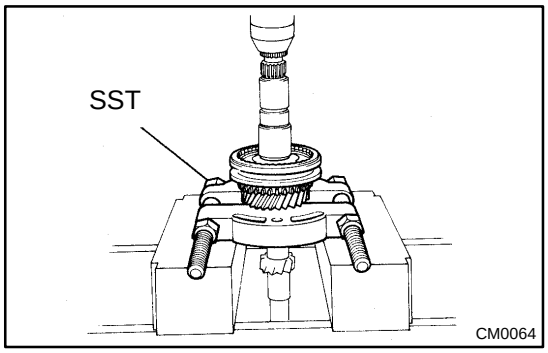

(b) Using SST and a press, remove the transmission clutch hub No.2 and 3rd gear from the input shaft.

SST 09950–00020

NOTICE:

- **Do not tighten SST excessively.**
- **Support the input shaft by hand so that it will not be dropped off.**

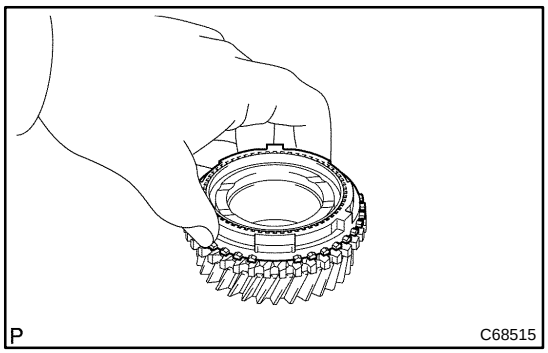

9. REMOVE 3RD GEAR SYNCHRONIZER RING

(a) Remove the 3rd gear synchronizer ring from the 3rd gear.

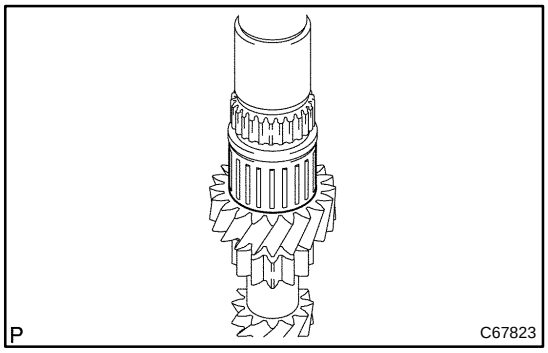

10. REMOVE 3RD GEAR NEEDLE ROLLER BEARING

(a) Remove the 3rd gear needle roller bearing from the input shaft.

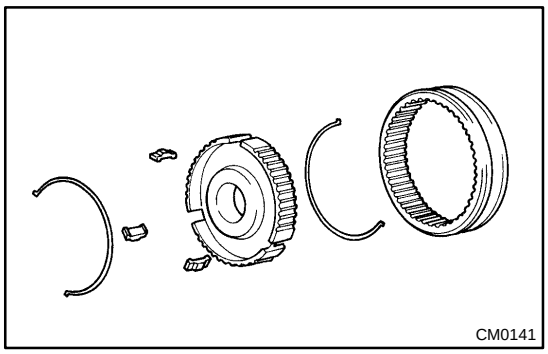

11. REMOVE TRANSMISSION HUB SLEEVE NO.2

(a) Remove the transmission hub sleeve No.2, 3 synchromesh shifting keys and 2 synchromesh shifting key springs from the transmission clutch hub No.2.

HINT:

Using a waste to prevent the shifting key and shifting key spring from being scattered.

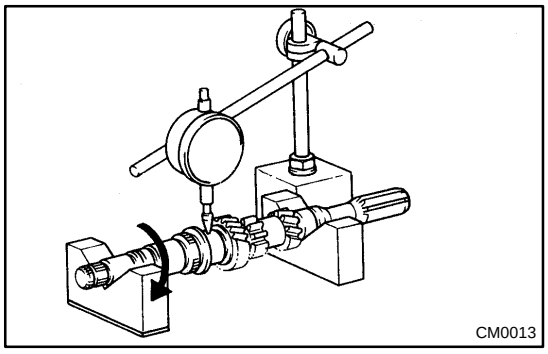

12. INSPECT INPUT SHAFT

(a) Using a dial indicator, check the shaft runout.

Maximum runout: 0.015 mm(0.0006 in.)

If the runout exceeds the maximum, replace the input shaft.

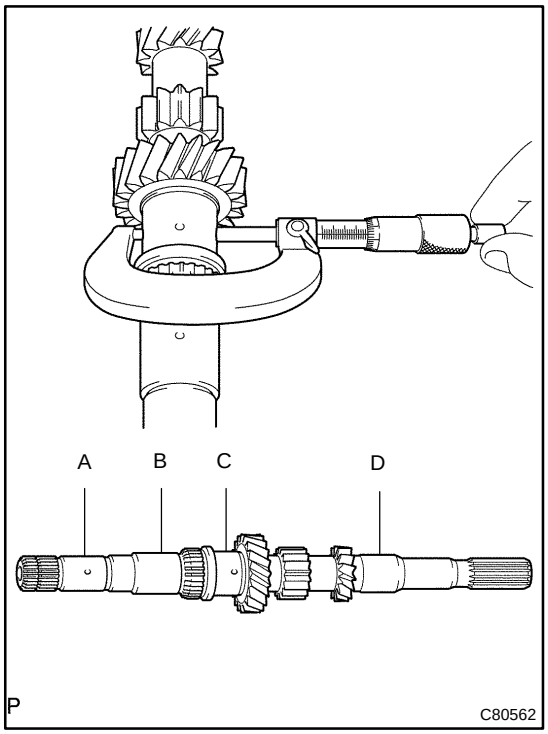

(b) Using a micrometer, measure the outer diameter of the input shaft journal surface.

Input shaft outer diameter:

Part	Standard outer diameter: mm (in.)	Minimum outer diameter: mm (in.)
A	24.885 – 24.900 (0.9797 – 0.9803)	24.885 (0.9797)
B	28.985 – 29.000 (1.1411 – 1.1417)	28.985 (1.1411)
C	30.985 – 31.000 (1.2198 – 1.2204)	30.985 (1.2198)
D	24.985–25.000 (0.9836 – 0.9842)	24.985 (0.9836)

If the outer diameter is below the minimum, replace the input shaft.

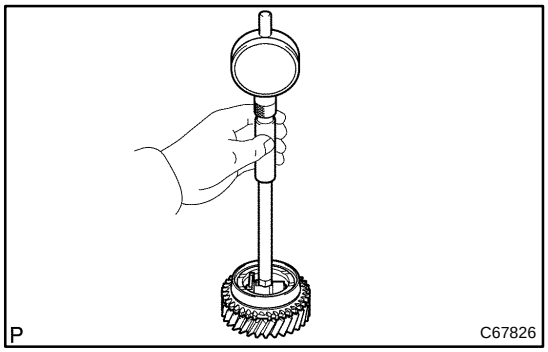

13. INSPECT 4TH GEAR

(a) Using a cylinder gauge, measure the inside diameter of the 4th gear.

Standard inside diameter:
34.015 – 34.031 mm (1.3391 – 1.3398 in.)
Maximum inside diameter:
34.031 mm (1.3398 in.)

If the inside diameter exceeds the maximum, replace the 4th gear.

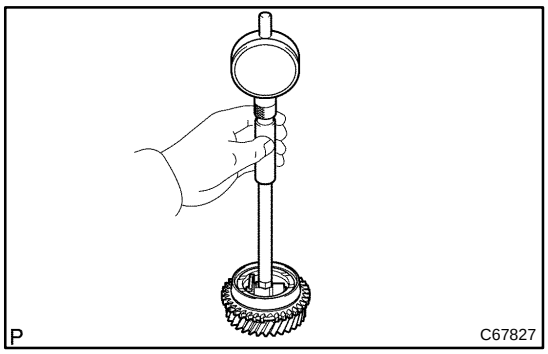

14. INSPECT 3RD GEAR

(a) Using a cylinder gauge, measure the inside diameter of the 3rd gear.

Standard inside diameter:
36.015 – 36.031 mm (1.4179 – 1.4185 in.)
Maximum inside diameter:
36.031 mm (1.4185 in.)

If the inside diameter exceeds the maximum, replace the 3rd gear.

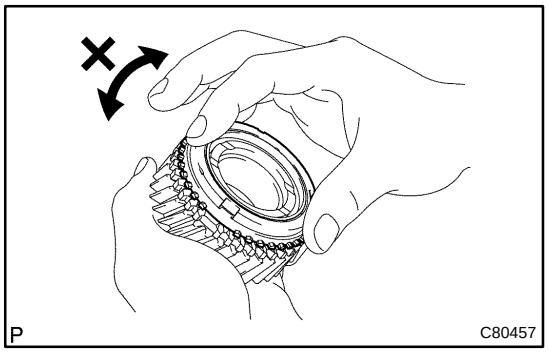

15. INSPECT 3RD GEAR SYNCHRONIZER RING

(a) Check for wear or damage.

(b) Check the braking effect of the 3rd gear synchronizer ring. Turn the 3rd gear synchronizer ring in one direction while pushing it to the gear cone. Check that the ring locks.

If the braking effect is insufficient, apply a small amount of the fine lapping compound between 3rd gear synchronizer ring and 3rd gear cone. Lightly rub the 3rd gear synchronizer ring and 3rd gear cone together.

NOTICE:

Ensure the fine lapping compound is completely washed off after rubbing.

(c) Check again the braking effect of the synchronizer ring.

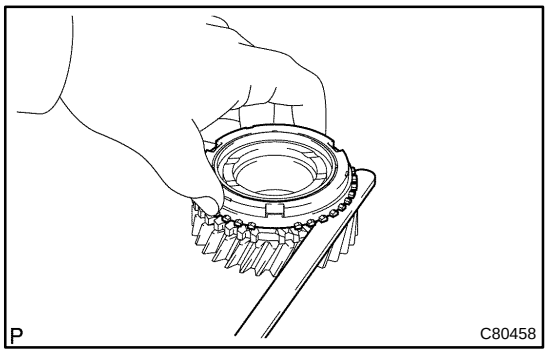

(d) Using a feeler gauge, measure the clearance between 3rd gear synchronizer ring back and 3rd gear spline end.

Minimum clearance:
0.65 mm (0.0256 in.)

If the clearance below than the minimum, replace the 3rd gear synchronizer ring, and apply small amount of the fine lapping compound on gear cone.

NOTICE:

Ensure the fine lapping compound is completely washed off after rubbing.

16. INSPECT 4TH GEAR SYNCHRONIZER RING

(a) Check for wear or damage.

(b) Check the braking effect of the 4th gear synchronizer ring. Turn the 4th gear synchronizer ring in one direction while pushing it to the gear cone. Check that the ring locks.

If the braking effect is insufficient, apply a small amount of the fine lapping compound between 4th gear synchronizer ring and 4th gear cone. Lightly rub the 4th gear synchronizer ring and 4th gear cone.

NOTICE:

Ensure the fine lapping compound is completely washed off after rubbing.

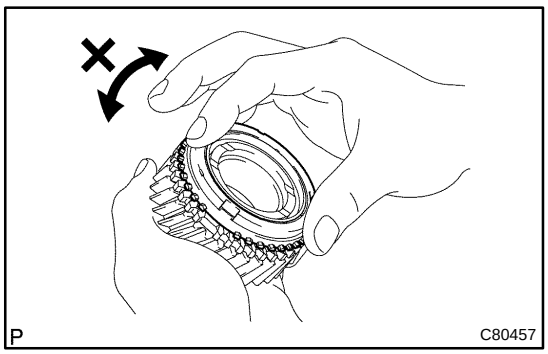

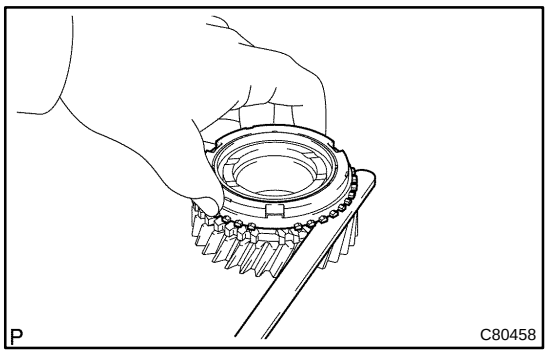

(c) Using a feeler gauge, measure the clearance between 4th gear synchronizer ring back and 4th gear spline end.
Minimum clearance: 0.75 mm (0.0295 in.)

If the clearance below than the minimum, replace the 4th gear synchronizer ring, and apply small amount of the fine lapping compound on gear cone.

NOTICE:

Ensure the fine lapping compound is completely washed off after rubbing.

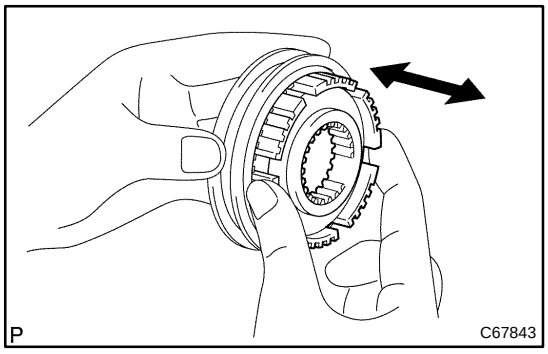

17. INSPECT TRANSMISSION HUB SLEEVE NO.2

(a) Check the sliding condition between the transmission hub sleeve No.2 and transmission clutch hub No.2.

(b) Check that the spline gear's edges of the transmission hub sleeve No.2 is not worn down.

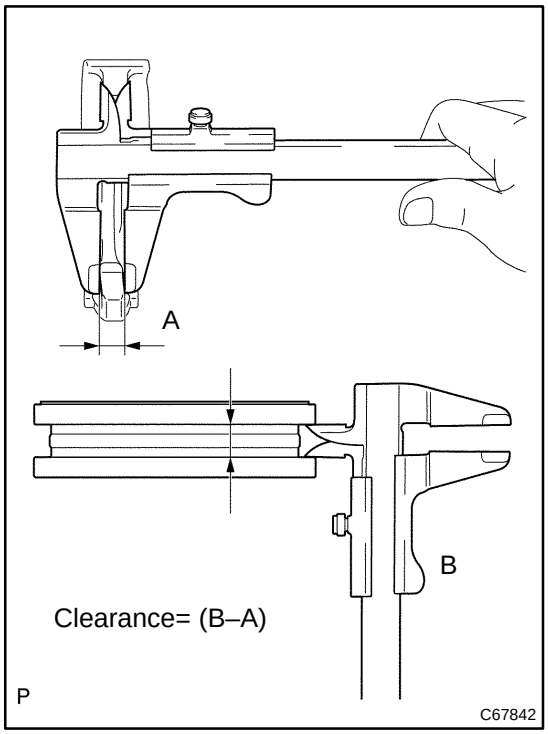

(c) Using a vernier caliper, inspect the transmission hub sleeve No.2 and gear shift fork No.2 as shown in the illustration.
Standard clearance:
0.15 – 0.35 mm (0.0059 – 0.0137 in.)

If the clearance is out of specification, replace the transmission hub sleeve No.2 and gear shift fork No.2.

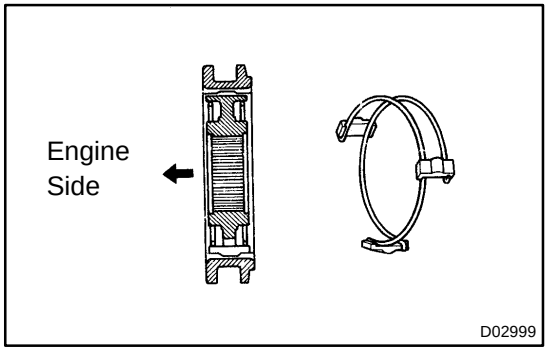

18. INSTALL TRANSMISSION HUB SLEEVE NO.2

(a) Coat the transmission hub sleeve No.2 with gear oil, install it to the transmission clutch hub No.2.

NOTICE:

Do not set the transmission clutch hub sleeve No.2 and the transmission clutch hub No.2 in incorrect orientation.

(b) Install the 2 synchromesh key springs with 3 synchromesh shifting keys to the transmission clutch hub No.2.

HINT:

Do not set the both openings of the shifting key springs in the same position.

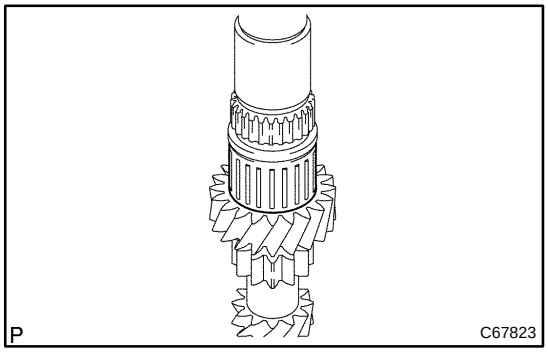

19. INSTALL 3RD GEAR NEEDLE ROLLER BEARING

(a) Coat the 3rd gear needle roller bearing with gear oil, install it to the input shaft.

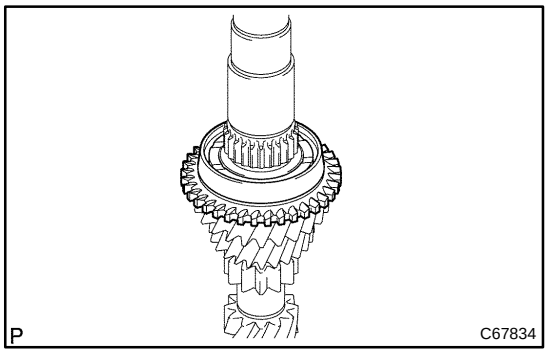

20. INSTALL 3RD GEAR

(a) Coat the 3rd gear with gear oil, install it to the input shaft.

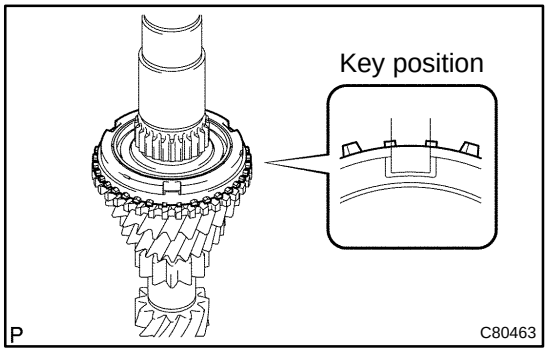

21. INSTALL 3RD GEAR SYNCHRONIZER RING

(a) Coat the 3rd gear synchronizer ring with gear oil, install it to the 3rd gear.

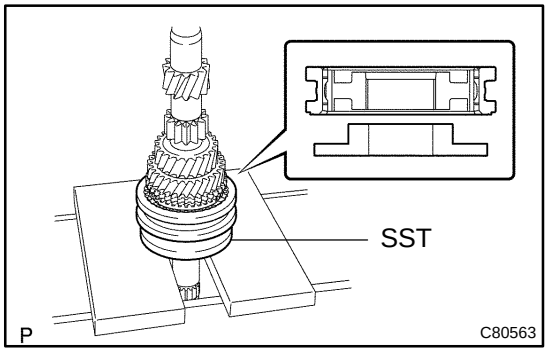

22. INSTALL TRANSMISSION CLUTCH HUB NO.2

(a) Using SST and a press, install the transmission clutch hub No.2 to the input shaft.

SST 09316–60011 (09316–00021)

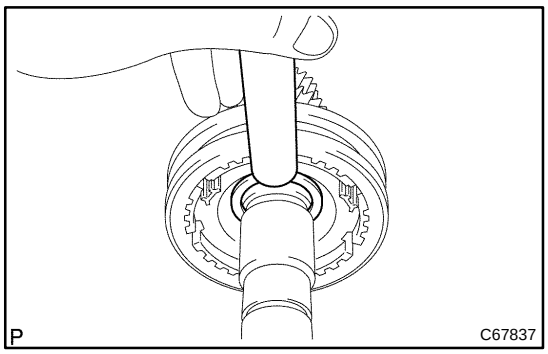

(b) Select a snap ring from the table below that will make the thrust clearance of the transmission clutch hub No.2 below 0.1 mm (0.0039 in.).

Snap ring thickness:

Mark	Thickness: mm (in.)	Mark	Thickness: mm (in.)
0	2.30 (0.0906)	3	2.48 (0.0976)
1	2.36 (0.0929)	4	2.54 (0.1000)
2	2.42 (0.0953)	5	2.60 (0.1024)

(c) Using a brass bar and a hammer, tap in the snap ring.

NOTICE:

Take care not to damage the journal surface of the input shaft.

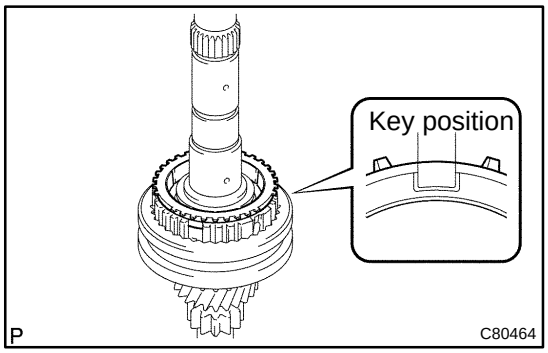

23. INSTALL 4TH GEAR SYNCHRONIZER RING

(a) Coat the 4th gear synchronizer ring with gear oil, install it to the transmission clutch hub No.2.

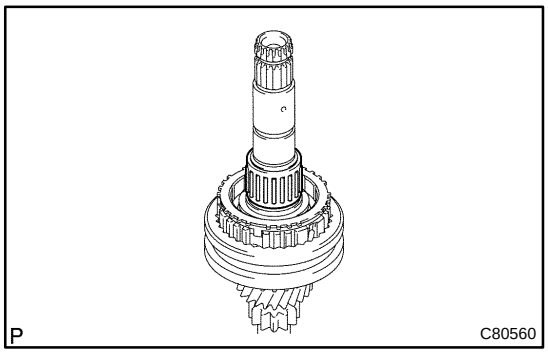

24. INSTALL 4TH GEAR NEEDLE ROLLER BEARING

(a) Coat the 4th gear needle roller bearing and 4th gear bearing spacer with gear oil, install them to the input shaft.

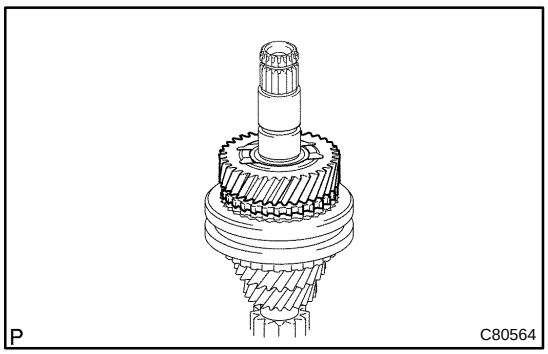

25. INSTALL 4TH GEAR

(a) Coat the 4th gear with gear oil, install it to the input shaft.

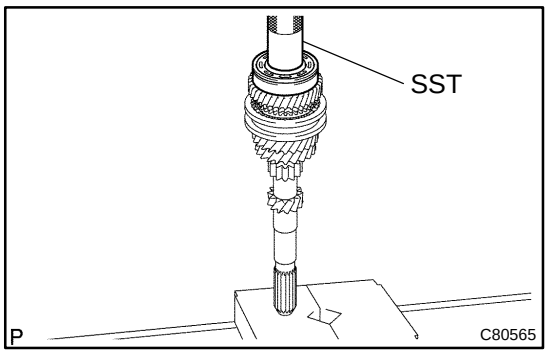

26. INSTALL INPUT SHAFT REAR RADIAL BALL BEARING

(a) Using SST and a press, install the input shaft rear radial ball bearing to the input shaft.
SST 09636–20010

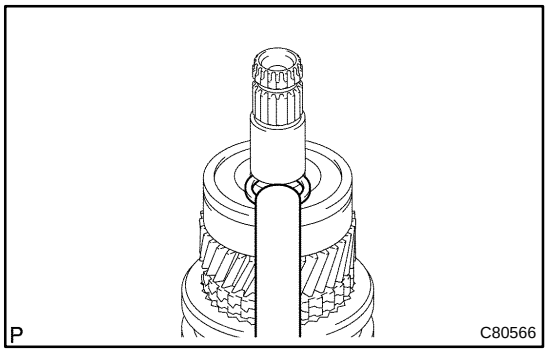

(b) Select a snap ring from the table below that will make the thrust clearance of the input shaft rear radial ball bearing below 0.1 mm (0.0039 in.).

Snap ring thickness:

Mark	Thickness: mm (in.)	Mark	Thickness: mm (in.)
0	2.29 (0.0901)	3	2.47 (0.0972)
1	2.35 (0.0925)	4	2.53 (0.0996)
2	2.41 (0.0948)	5	2.59 (0.1019)

(c) Using a brass bar and a hammer, tap in the snap ring.

NOTICE:

Take care not to damage the journal surface of the snap ring.

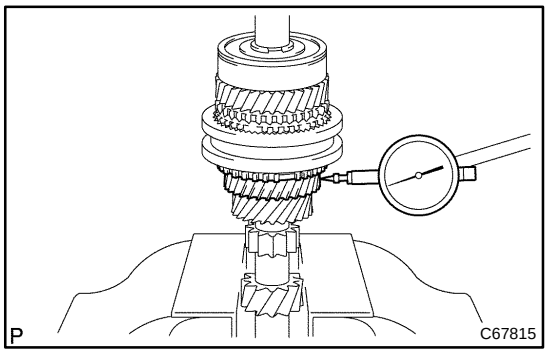

27. INSPECT 3RD GEAR RADIAL CLEARANCE

(a) Using a dial indicator, measure the 3rd gear radial clearance.

3rd gear radial clearance:

	Standard clearance: mm (in.)	Maximum clearance: mm (in.)
KOYO made	0.015 – 0.058 (0.0006 – 0.0023)	0.058 (0.0023)
NSK made	0.015 – 0.056 (0.0006 – 0.0022)	0.056 (0.0022)

If the clearance exceeds the maximum, replace the gear, needle roller bearing or shaft.

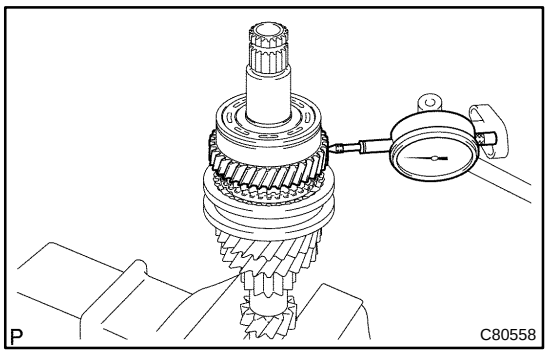

28. INSPECT 4TH GEAR RADIAL CLEARANCE

(a) Using a dial indicator, measure the 4th gear radial clearance.

4th gear radial clearance:

	Standard clearance: mm (in.)	Maximum clearance: mm (in.)
KOYO made	0.015 – 0.058 (0.0006 – 0.0023)	0.058 (0.0023)
NSK made	0.015 – 0.056 (0.0006 – 0.0022)	0.056 (0.0022)

If the clearance exceeds the maximum, replace the gear, needle roller bearing or shaft.

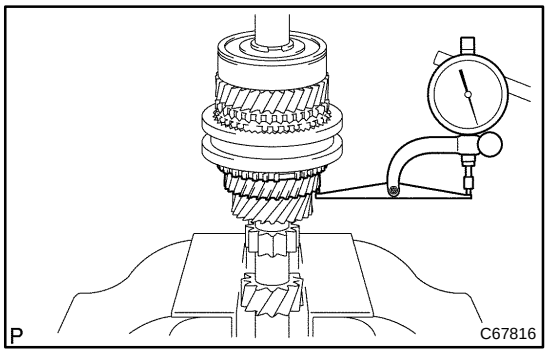

29. INSPECT 3RD GEAR THRUST CLEARANCE

(a) Using a dial indicator, measure the 3rd gear thrust clearance.

3rd gear thrust clearance:

Standard clearance: mm (in.)	Maximum clearance: mm (in.)
0.10 – 0.35 (0.0039 – 0.0138)	0.35 (0.0138)

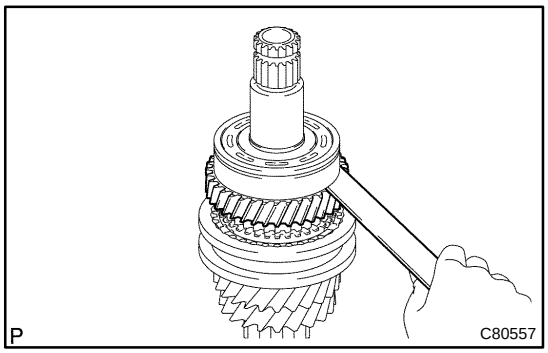

30. INSPECT 4TH GEAR THRUST CLEARANCE

(a) Using a feeler gauge, measure the 4th gear thrust clearance.

4th gear thrust clearance:

Standard clearance: mm (in.)	Maximum clearance: mm (in.)
0.10 – 0.55 (0.0039 – 0.0217)	0.55 (0.0217)

MANUAL TRANSAXLE ASSY (C59)

COMPONENTS

4107E–01

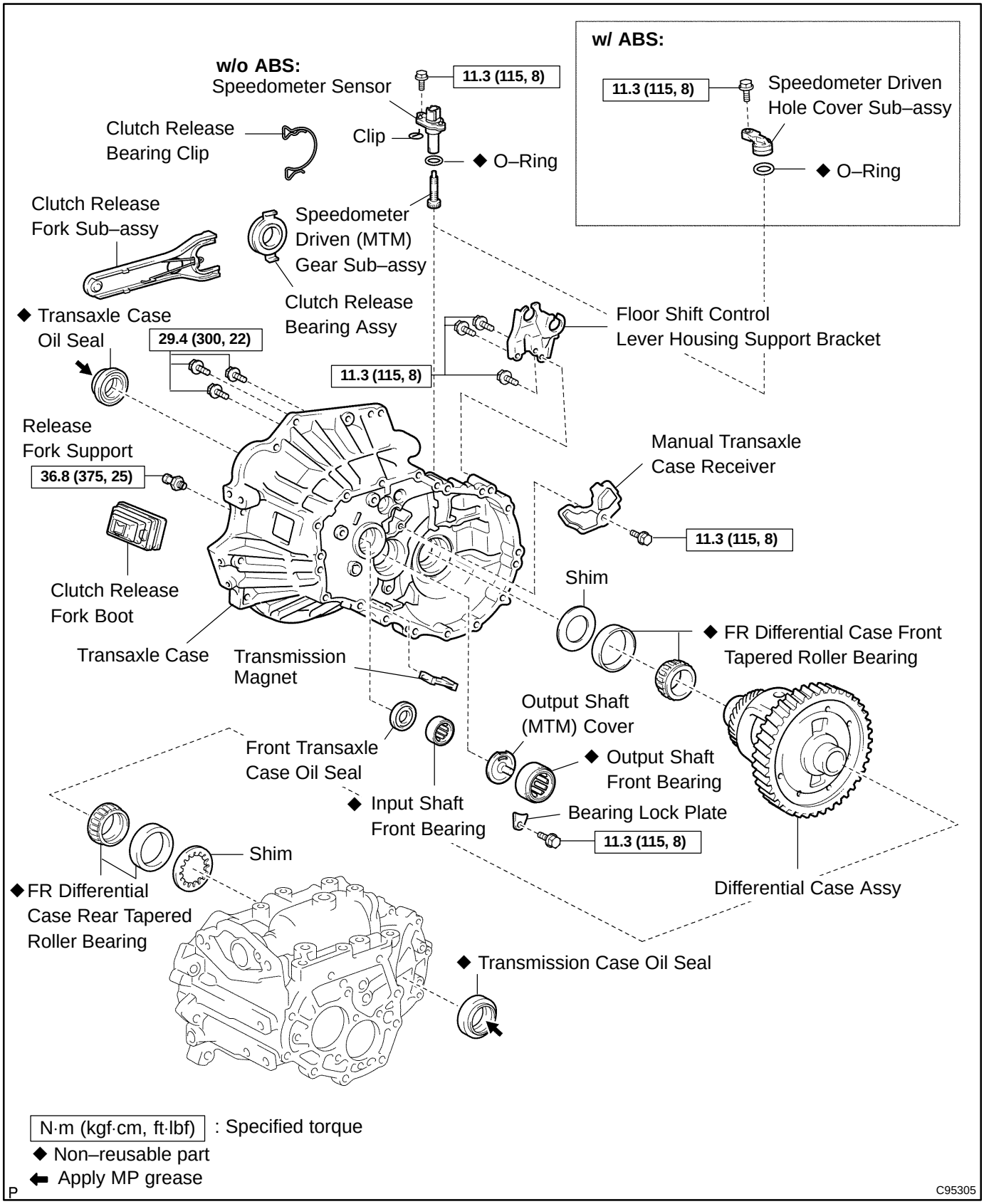

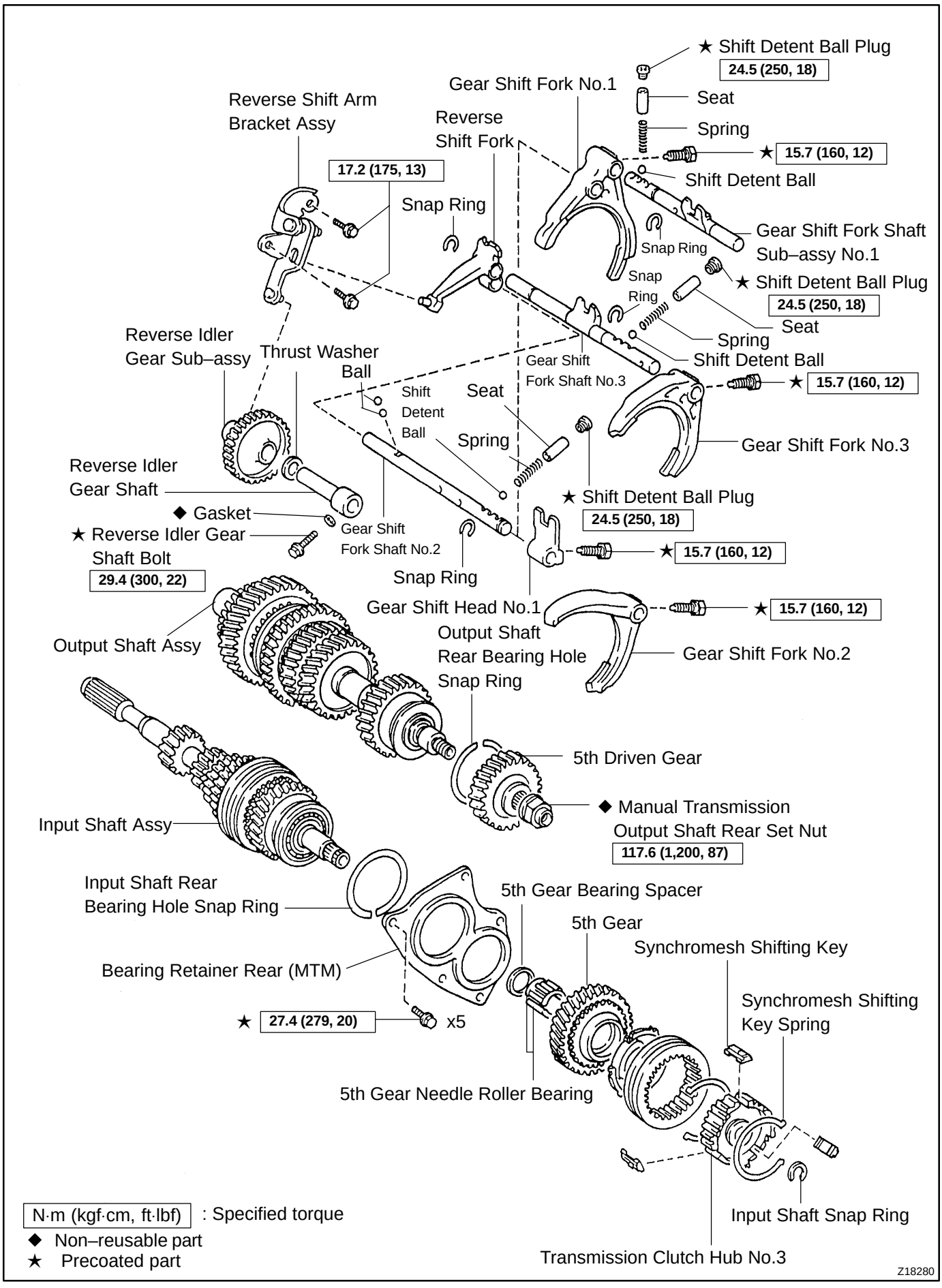
★ Shift Detent Ball Plug
24.5 (250, 18)
Gear Shift Fork No.1
Seat
Spring
★ 15.7 (160, 12)
Shift Detent Ball
Reverse Shift Arm Bracket Assy
Reverse Shift Fork
17.2 (175, 13)
Snap Ring
Snap Ring
Gear Shift Fork Shaft Sub–assy No.1
Snap Ring
★ Shift Detent Ball Plug
24.5 (250, 18)
Seat
Spring
Shift Detent Ball
Reverse Idler Gear Sub–assy
Thrust Washer
Ball
Gear Shift Fork Shaft No.3
★ 15.7 (160, 12)
Shift Detent Ball
Seat
Spring
Gear Shift Fork No.3
Reverse Idler Gear Shaft
◆ Gasket
★ Reverse Idler Gear Shaft Bolt
29.4 (300, 22)
Gear Shift Fork Shaft No.2
★ Shift Detent Ball Plug
24.5 (250, 18)
★ 15.7 (160, 12)
Snap Ring
Gear Shift Head No.1
★ 15.7 (160, 12)
Output Shaft Assy
Output Shaft Rear Bearing Hole Snap Ring
Gear Shift Fork No.2
5th Driven Gear
◆ Manual Transmission Output Shaft Rear Set Nut
117.6 (1,200, 87)
Input Shaft Assy
Input Shaft Rear Bearing Hole Snap Ring
5th Gear Bearing Spacer
5th Gear
Synchromesh Shifting Key
Bearing Retainer Rear (MTM)
★ 27.4 (279, 20) x5
Synchromesh Shifting Key Spring
5th Gear Needle Roller Bearing
Input Shaft Snap Ring
Transmission Clutch Hub No.3
N·m (kgf·cm, ft·lbf) : Specified torque
◆ Non–reusable part
★ Precoated part
Z18280

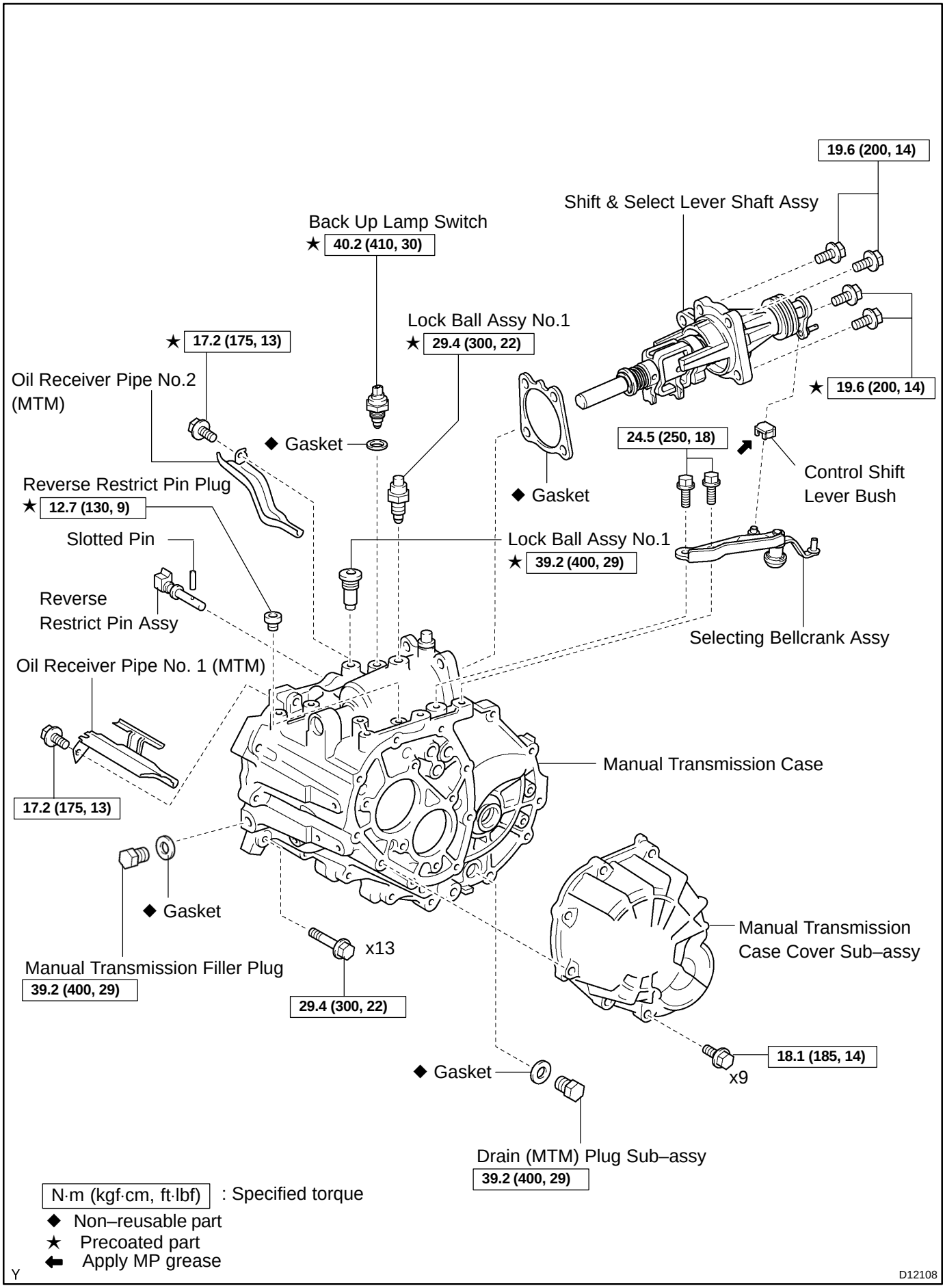
19.6 (200, 14)
Shift & Select Lever Shaft Assy
Back Up Lamp Switch
★ 40.2 (410, 30)
Lock Ball Assy No.1
★ 29.4 (300, 22)
★ 17.2 (175, 13)
Oil Receiver Pipe No.2
(MTM)
◆ Gasket
★ 19.6 (200, 14)
24.5 (250, 18)
Control Shift
Lever Bush
◆ Gasket
Reverse Restrict Pin Plug
★ 12.7 (130, 9)
Slotted Pin
Lock Ball Assy No.1
★ 39.2 (400, 29)
Reverse
Restrict Pin Assy
Selecting Bellcrank Assy
Oil Receiver Pipe No. 1 (MTM)
Manual Transmission Case
17.2 (175, 13)
◆ Gasket
Manual Transmission
Case Cover Sub–assy
x13
Manual Transmission Filler Plug
39.2 (400, 29)
29.4 (300, 22)
18.1 (185, 14)
x9
◆ Gasket
Drain (MTM) Plug Sub–assy
39.2 (400, 29)
N·m (kgf·cm, ft·lbf) : Specified torque
◆ Non–reusable part
★ Precoated part
⬅ Apply MP grease
Y
D12108

4107F–01

OVERHAUL

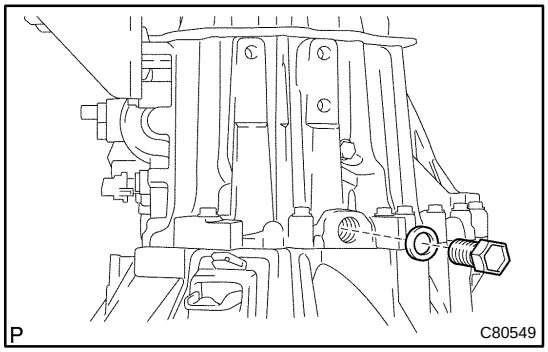

1. REMOVE MANUAL TRANSMISSION FILLER PLUG

(a) Remove the manual transmission filler plug and gasket from the manual transmission case.

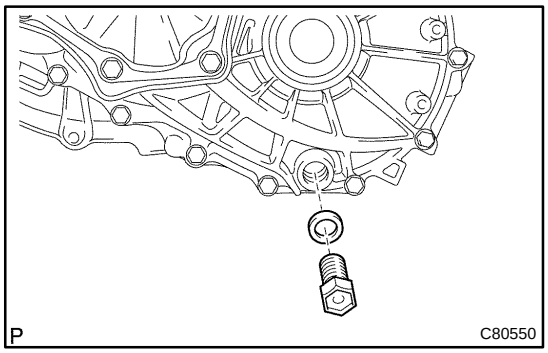

2. REMOVE DRAIN (MTM) PLUG SUB–ASSY

(a) Remove the drain (MTM) plug sub–assy and gasket from the manual transmission case.

3. REMOVE SPEEDOMETER SENSOR (W/O ABS)

(a) Remove the bolt and speedometer sensor from the transaxle case.

(b) Remove the O–ring from the speedometer sensor.

4. REMOVE SPEEDOMETER DRIVEN (MTM) GEAR SUB–ASSY (W/O ABS)

(a) Remove the clip and speedometer driven (MTM) gear sub–assy from the speedometer sensor.

5. REMOVE SPEEDOMETER DRIVEN HOLE COVER SUB–ASSY (W/ ABS)

(a) Remove the bolt and speedometer driven hole cover sub–assy from the transaxle case.

(b) Remove the O–ring from the speedometer driven hole cover.

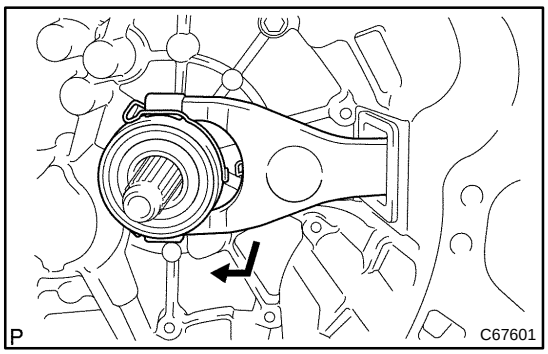

6. REMOVE CLUTCH RELEASE FORK SUB–ASSY

(a) Remove the clutch release fork sub–assy with clutch release bearing assy from the transaxle case.

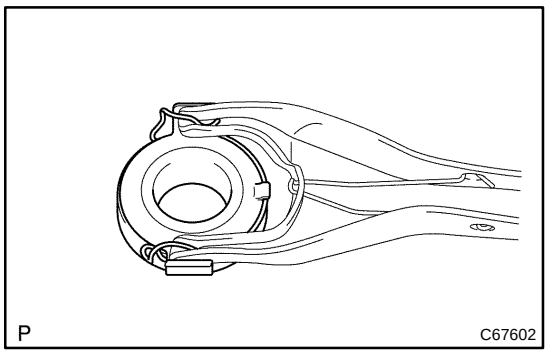

7. REMOVE CLUTCH RELEASE BEARING ASSY

(a) Remove the clutch release bearing clip and clutch release bearing assy from the clutch release fork sub–assy.

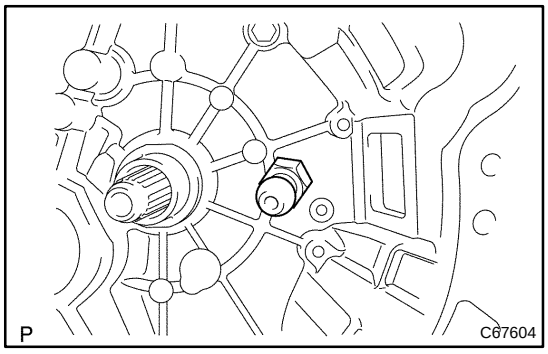

8. REMOVE RELEASE FORK SUPPORT

(a) Remove the clutch release fork support from the transaxle case.

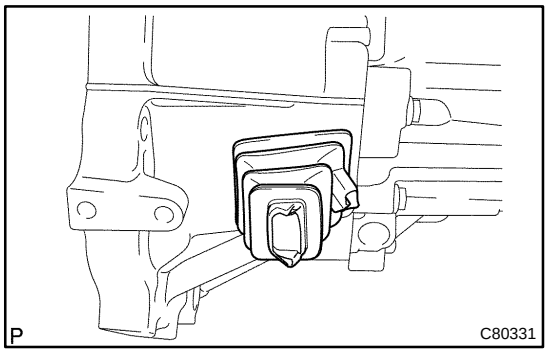

9. REMOVE CLUTCH RELEASE FORK BOOT

(a) Remove the clutch release fork boot from the transaxle case.

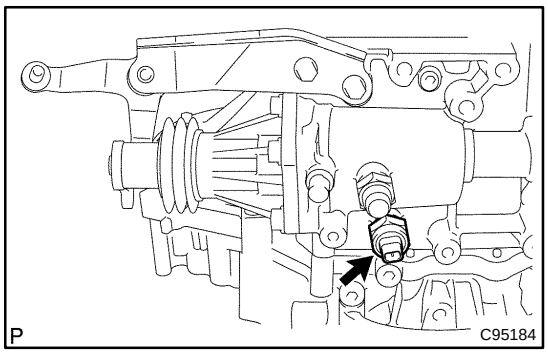

10. REMOVE BACK UP LAMP SWITCH ASSY

(a) Remove the back up lamp switch assy and gasket from the manual transmission case.

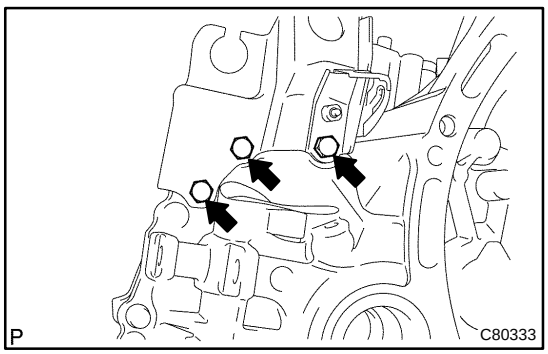

11. REMOVE FLOOR SHIFT CONTROL LEVER HOUSING SUPPORT BRACKET

(a) Remove the 3 bolts and floor shift control lever housing support bracket from the transaxle case.

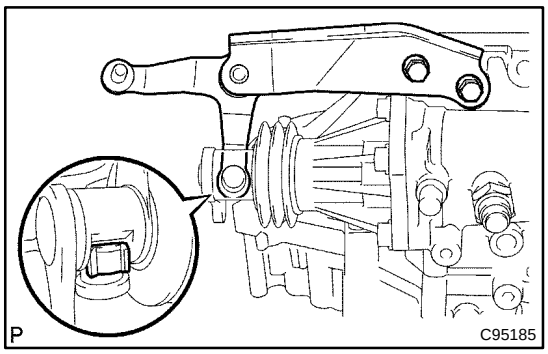

12. REMOVE SELECTING BELL CRANK ASSY

(a) Remove the 2 bolts and selecting bellcrank assy from the manual transmission case.

(b) Remove the control shift lever bush.

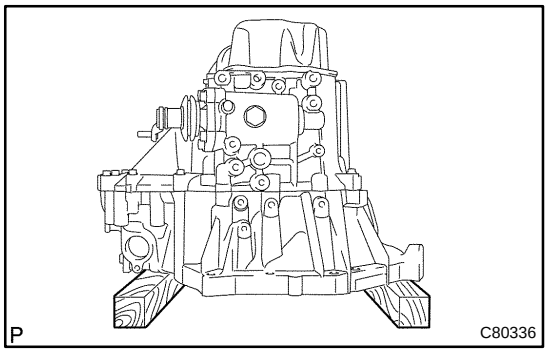

13. FIX MANUAL TRANSAXLE ASSY

(a) Using 2 wooden blocks, fix the manual transaxle assy.

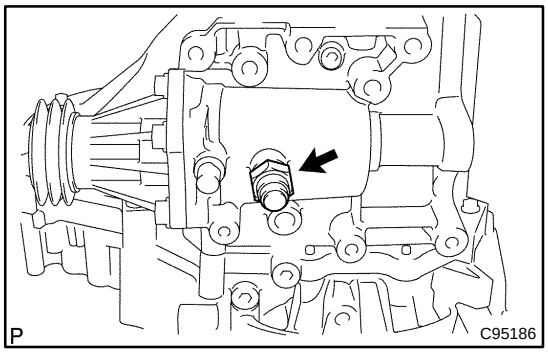

14. REMOVE LOCK BALL ASSY NO.1

(a) Remove the lock ball assy No.1 from the manual transmission case.

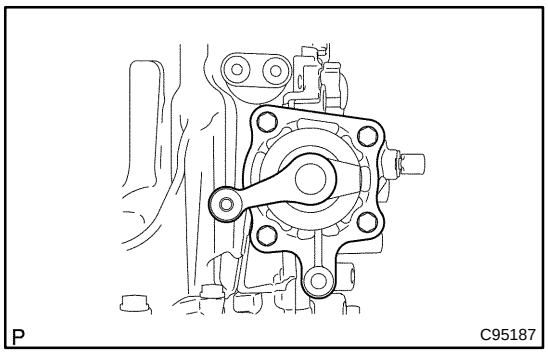

15. REMOVE SHIFT & SELECT LEVER SHAFT ASSY

(a) Remove the 4 bolts, shift & select lever shaft assy and gasket from the manual transmission case.

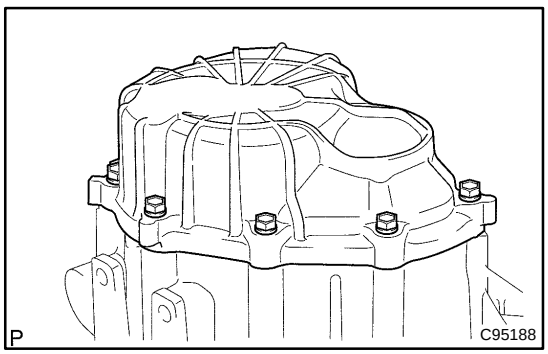

16. REMOVE MANUAL TRANSMISSION CASE COVER SUB–ASSY

(a) Remove the 9 bolts.

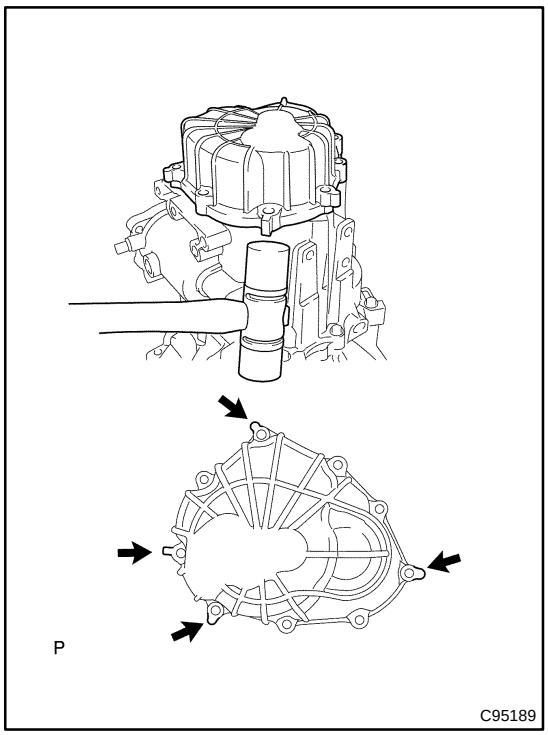

(b) Using a plastic hammer, carefully tap the projection of the manual transmission case cover sub–assy to remove it from the manual transmission case.

NOTICE:

Do not damage the manual transmission case.

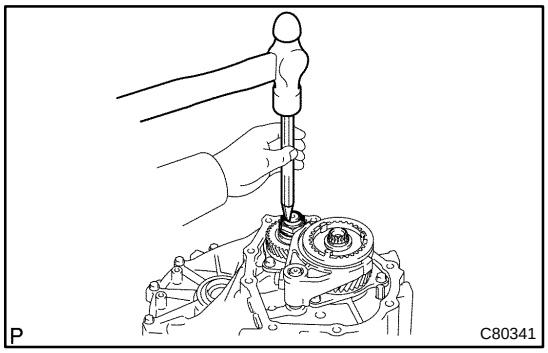

17. REMOVE MANUAL TRANSMISSION OUTPUT SHAFT REAR SET NUT

(a) Using a chisel and a hammer, loosen the staked part of the manual transmission output shaft rear set nut.

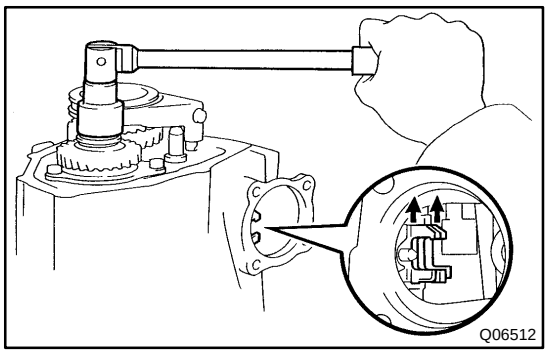

(b) Engage the gear to the double meshing.

(c) Remove the manual transmission output shaft rear set nut.

(d) Disengage the double mashing of the gear.

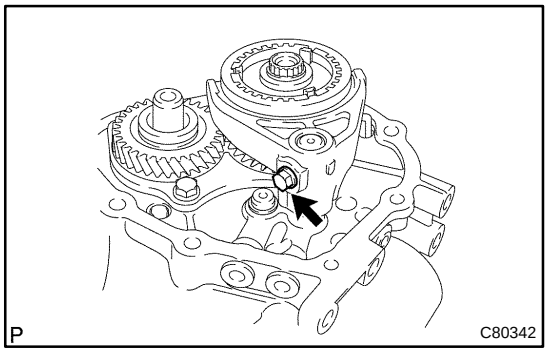

18. REMOVE GEAR SHIFT FORK NO.3

(a) Remove the gear shift fork lock bolt from the gear shift fork No.3.

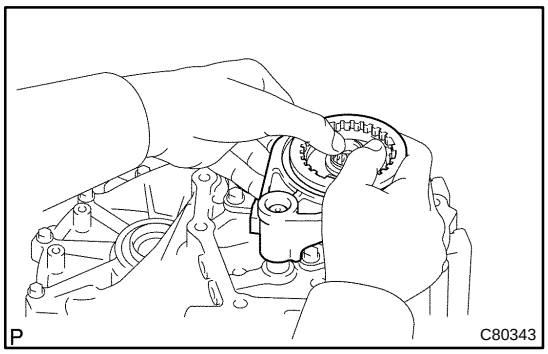

(b) Remove the transmission hub sleeve No.3 with gear shift fork No.3 from the transmission clutch hub No.3.

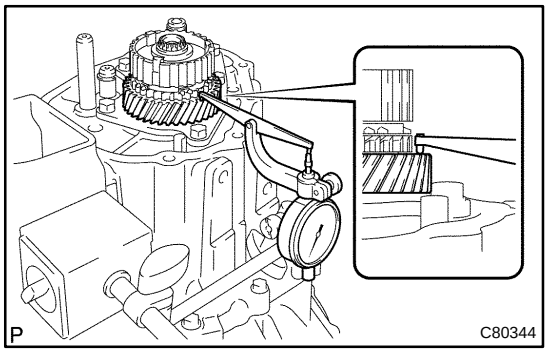

19. INSPECT 5TH GEAR THRUST CLEARANCE

(a) Using a dial indicator, measure the 5th gear thrust clearance.

5th gear thrust clearance:

Standard clearance: mm (in.)	Maximum clearance: mm (in.)
0.10 – 0.57 (0.0039 – 0.0224)	0.57 (0.0224)

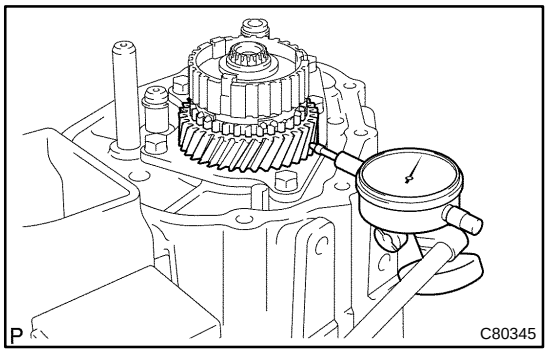

20. INSPECT 5TH GEAR RADIAL CLEARANCE

(a) Using a dial indicator, measure the 5th gear radial clearance.

5th gear radial clearance: mm (in.)

Standard clearance: mm (in.)	Maximum clearance: mm (in.)
KOYO made: 0.015 – 0.058 (0.0006 – 0.0023)	KOYO made: 0.058 (0.0023)
NSK made: 0.015 – 0.056 (0.0006 – 0.0022)	NSK made: 0.056 (0.0022)

If the clearance exceeds the maximum, replace the gear, needle roller bearing or shaft.

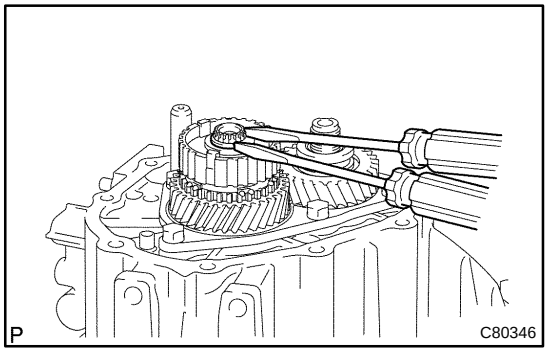

21. REMOVE TRANSMISSION CLUTCH HUB NO.3

(a) Using 2 screwdrivers and a hammer, tap out the snap ring.

HINT:

Using a waste to prevent the snap ring from being scattered.

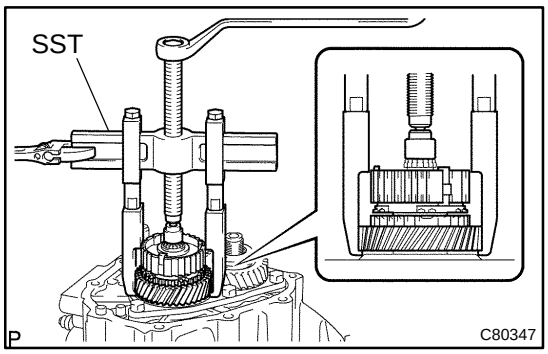

(b) Using SST, remove the transmission clutch hub No.3, 5th gear and synchronizer ring No.3 from the input shaft.

SST 09950–40011 (09951–04020, 09952–04010, 09953–04030, 09954–04010, 09955–04071, 09957–04010), 09950–60010 (09951–00200)

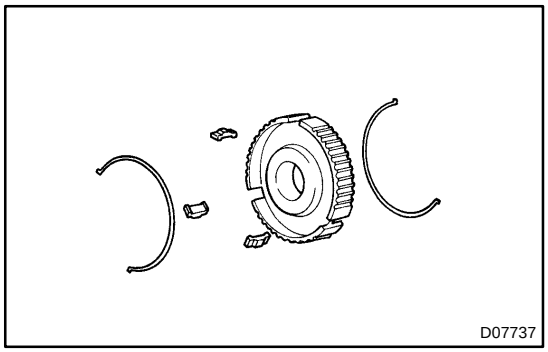

(c) Remove the 3 synchromesh shifting keys and 2 synchromesh shifting key springs from the transmission clutch hub No.3.

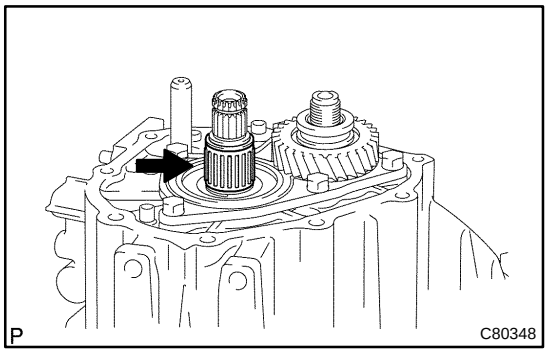

22. REMOVE 5TH GEAR NEEDLE ROLLER BEARING

(a) Remove the 5th gear needle roller bearing and 5th gear bearing spacer from the input shaft.

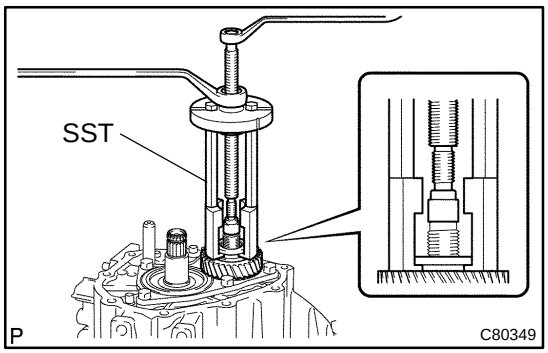

23. REMOVE 5TH DRIVEN GEAR

(a) Using SST, remove the 5th driven gear from the output shaft.

SST 09950–30012 (09951–03010, 09953–03010, 09954–03010, 09955–03011, 09957–04010), 09950–60010 (09951–00190)

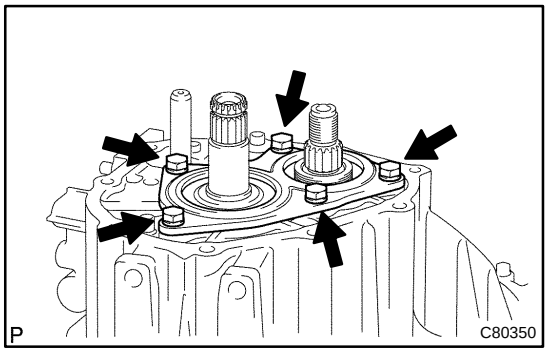

24. REMOVE BEARING RETAINER REAR (MTM)

(a) Remove the 5 bolts and bearing retainer rear (MTM) from the manual transmission case.

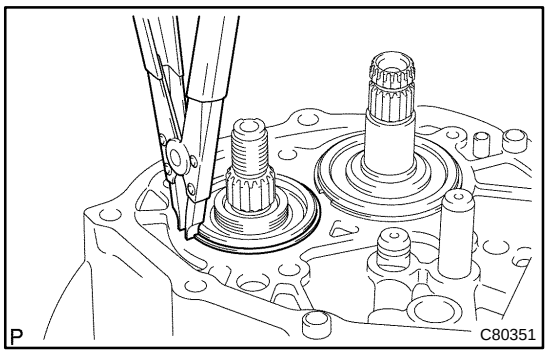

25. REMOVE OUTPUT SHAFT REAR BEARING HOLE SNAP RING

(a) Using a snap ring expander, remove the output shaft rear bearing hole snap ring from the output shaft.

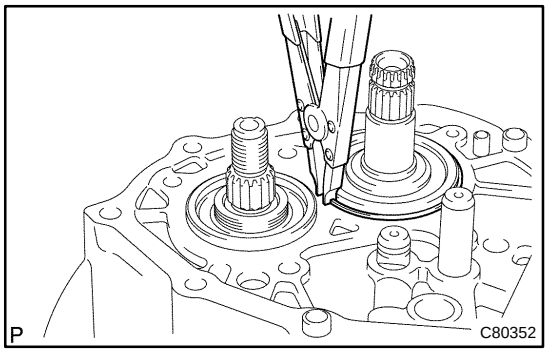

26. REMOVE INPUT SHAFT REAR BEARING HOLE SNAP RING

(a) Using a snap ring expander, remove the input shaft rear bearing hole snap ring from the input shaft.

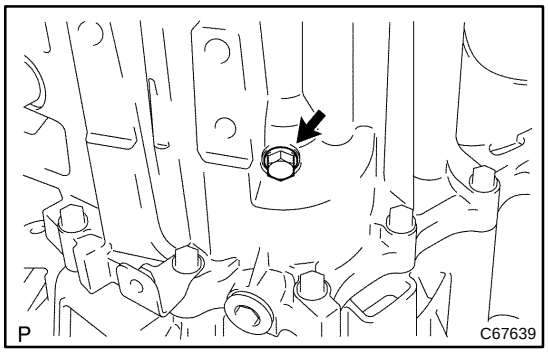

27. REMOVE REVERSE IDLER GEAR SHAFT BOLT

(a) Remove the reverse idler gear shaft bolt and gasket from the manual transmission case.

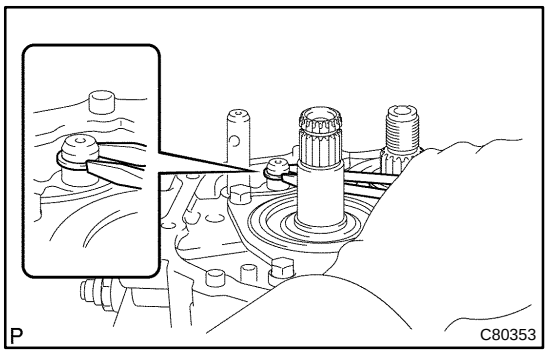

28. REMOVE SHIFT FORK SHAFT SHAFT SNAP RING

(a) Using 2 screwdrivers and a hammer, tap out the snap ring from the gear shift fork shaft No.2.

HINT:

Using a waste to prevent the snap ring from being scattered.

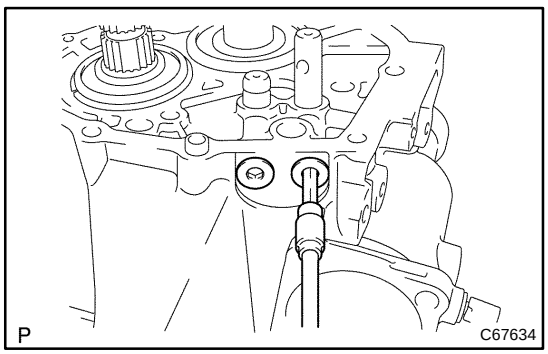

29. REMOVE SHIFT DETENT BALL

(a) Using a hexagon wrench, remove the 2 shift detent ball plugs from the manual transmission case.

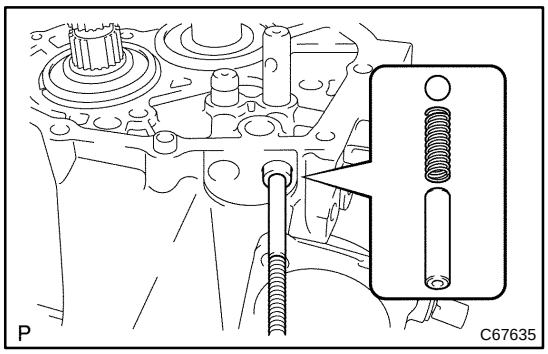

(b) Using a magnetic finger, remove the 2 seats, 2 springs and 2 shift detent balls from the manual transmission case.

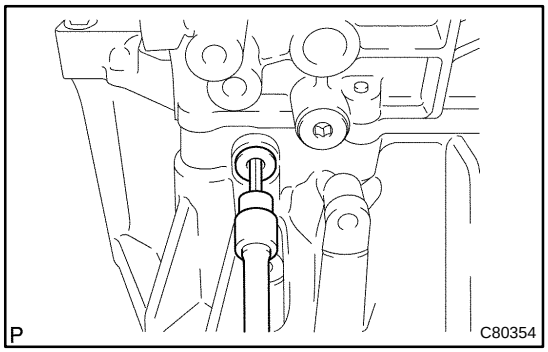

(c) Using a hexagon wrench, remove the shift detent ball plug from the transaxle case.

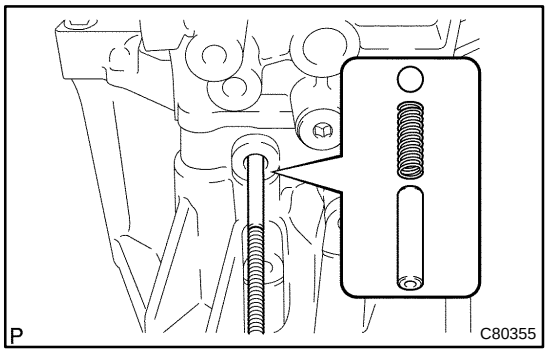

(d) Using a magnetic finger, remove the seat, spring and shift detent ball from the transaxle case.

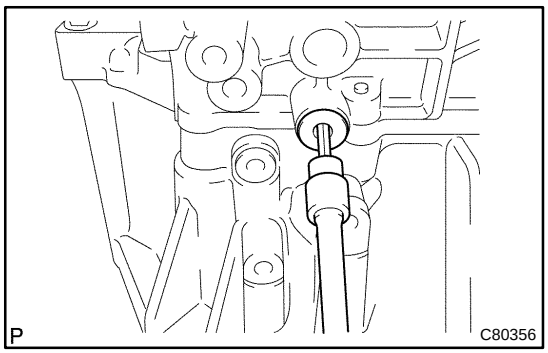

30. REMOVE LOCK BALL ASSY NO.1

(a) Using a hexagon wench, remove the lock ball assy No.1 from the manual transmission case.

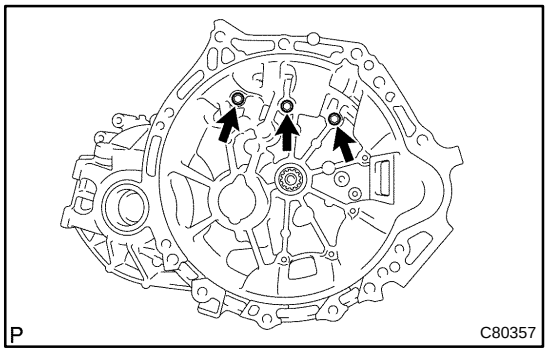

31. REMOVE MANUAL TRANSMISSION CASE

(a) Remove the 3 bolts from the transaxle case side.

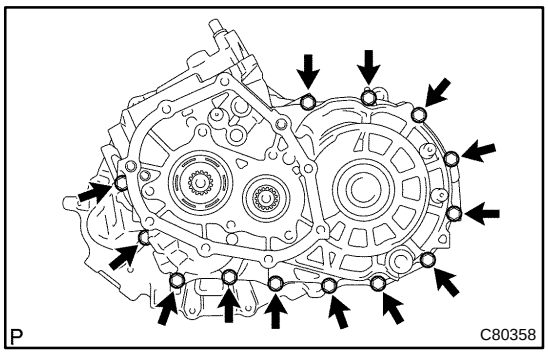

(b) Remove the 13 bolts from the manual transmission case side.

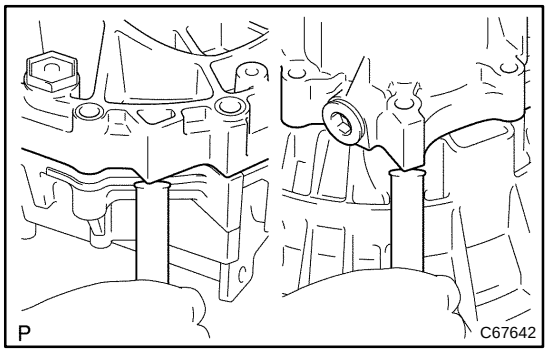

(c) Using a brass bar and a hammer, carefully tap the projection of the manual transmission case to remove it from the transaxle case.

NOTICE:

Do not damage the manual transmission case and transaxle case.

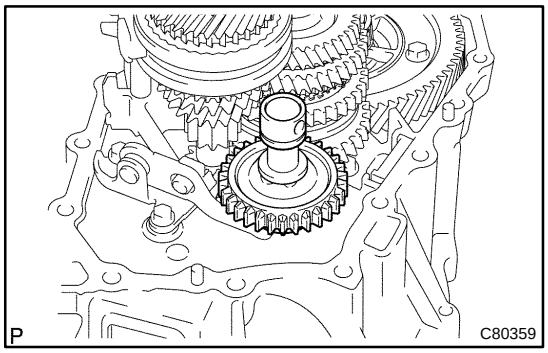

32. REMOVE REVERSE IDLER GEAR SUB–ASSY

(a) Remove the reverse idler gear sub–assy, thrust washer and reverse idler gear shaft from the transaxle case.

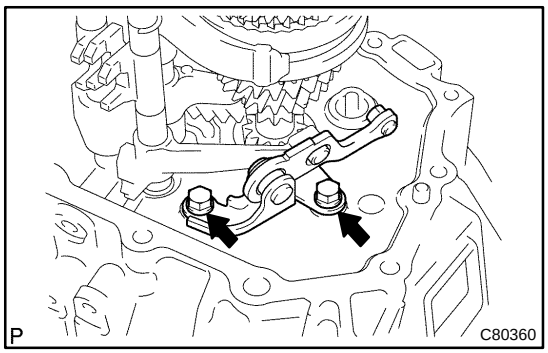

33. REMOVE REVERSE SHIFT ARM BRACKET ASSY

(a) Remove the 2 bolts and reverse shift arm bracket assy from the transaxle case.

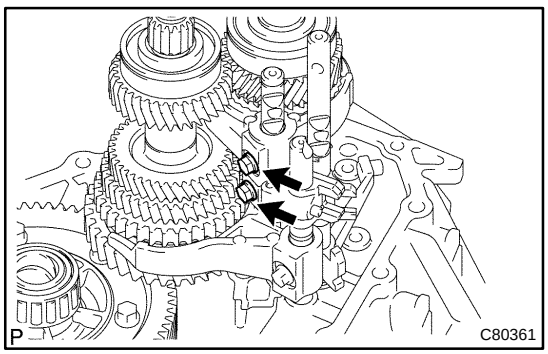

34. REMOVE GEAR SHIFT FORK SHAFT NO.2

(a) Remove the 2 bolts from the gear shift fork No. 2 and gear shift head No.1.

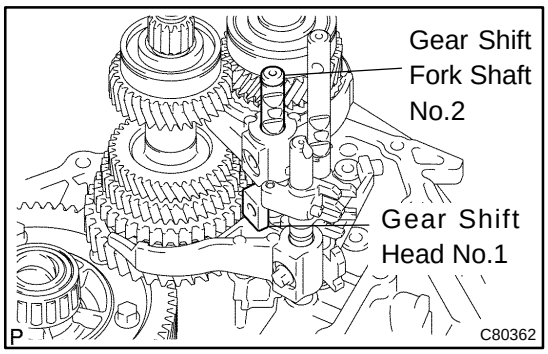

(b) Remove the gear shift fork shaft No.2 and gear shift head No.1 from the transaxle case.

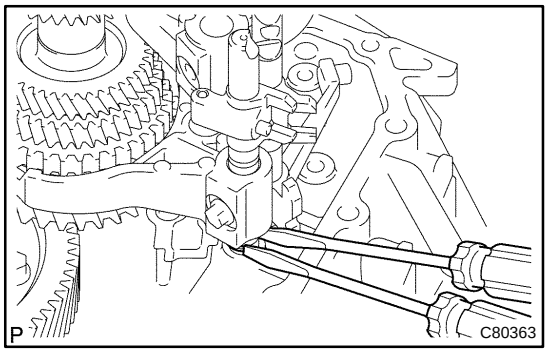

35. REMOVE GEAR SHIFT FORK SHAFT SUB–ASSY NO.1

(a) Using 2 screwdrivers and a hammer, tap out the snap rings.

HINT:

Using a waste to prevent the snap ring from being scattered.

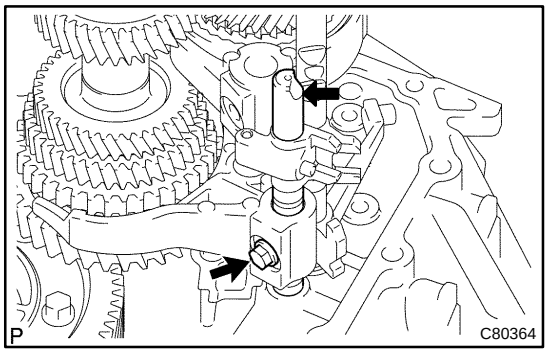

(b) Remove the gear shift fork lock bolt and gear shift fork shaft sub–assy No.1 from the gear shift fork No.1.

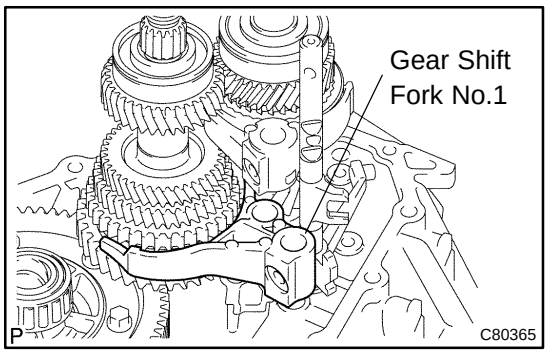

(c) Remove the gear shift fork No.1.

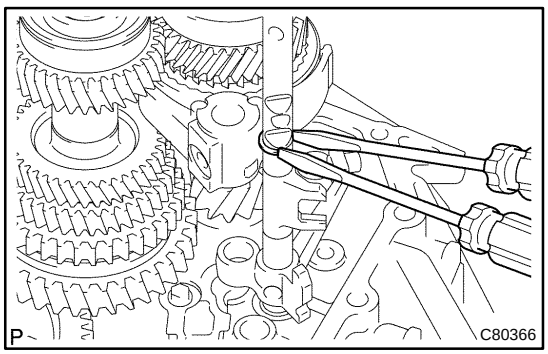

36. REMOVE GEAR SHIFT FORK SHAFT NO.3

(a) Using 2 screwdrivers and a hammer, tap out the snap ring from the gear shift fork shaft No.3.

HINT:

Using a waste to prevent the snap ring from being scattered.

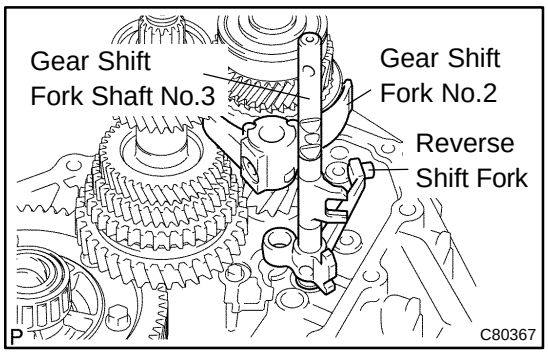

(b) Remove the shift fork shaft No.3 with reverse shift fork and gear shift fork No.2 from the transaxle case.

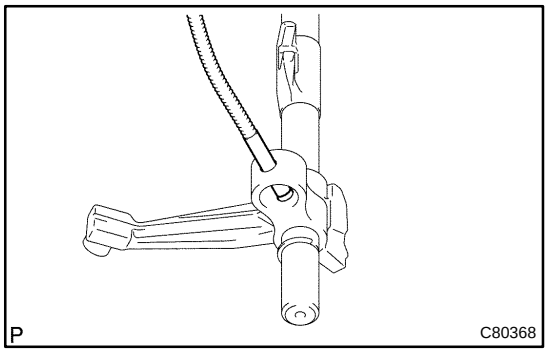

(c) Using a magnetic finger, remove the 2 balls from the reverse shift fork.

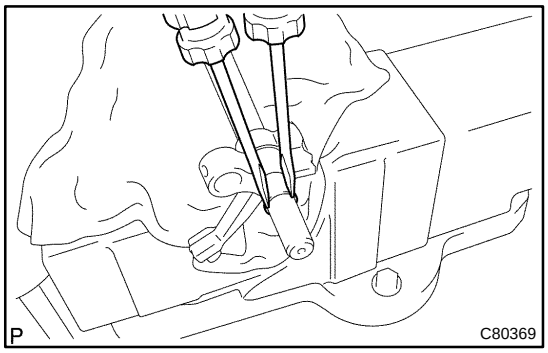

(d) Using 2 screwdrivers and a hammer, tap out the snap ring.

HINT:

Using a waste to prevent the snap ring from being scattered.

(e) Remove the reverse shift fork from the gear shift fork shaft No.3.

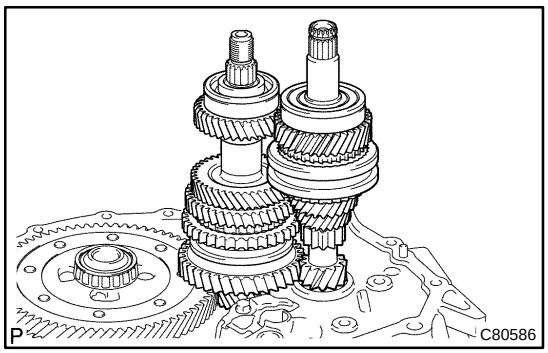

37. REMOVE INPUT SHAFT ASSY

(a) Remove the input and output shaft assy from the transaxle case.

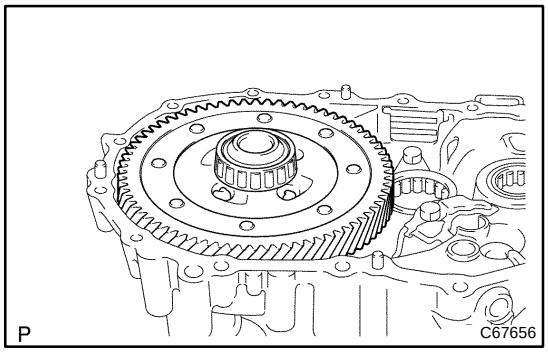

38. REMOVE DIFFERENTIAL CASE ASSY

(a) Remove the differential case assy from the transaxle case.

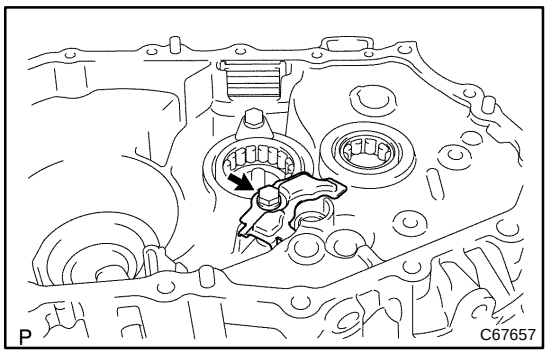

39. REMOVE MANUAL TRANSAXLE CASE RECEIVER

(a) Remove the bolt and manual transaxle case receiver from the transaxle case.

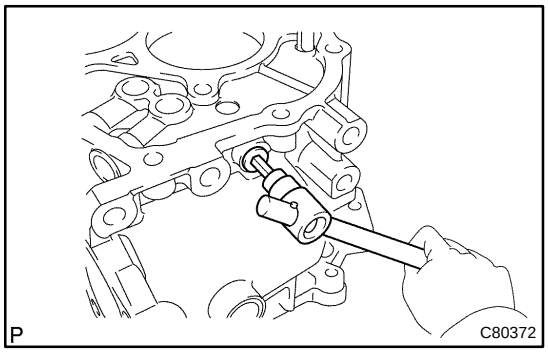

40. REMOVE REVERSE RESTRICT PIN ASSY

(a) Using a hexagon wrench, remove the reverse restrict pin plug from the manual transmission case.

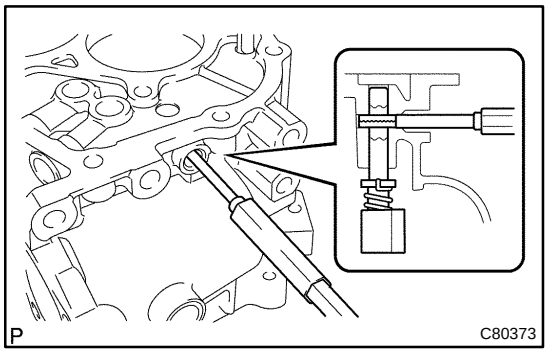

(b) Using a pin punch (ϕ 5 mm) and a hammer, drive out the slotted spring pin and remove the reverse restrict pin assy from the manual transmission case.

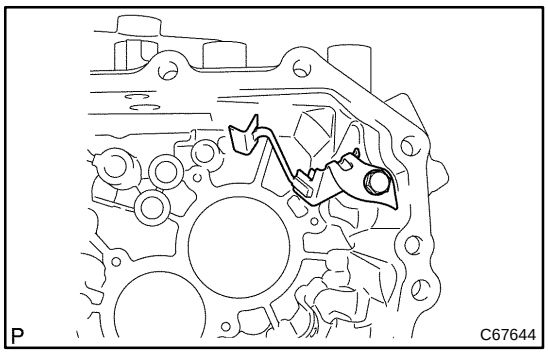

41. REMOVE OIL RECEIVER PIPE NO.1 (MTM)

(a) Remove the bolt and oil receiver pipe No.1 (MTM) from the manual transmission case.

NOTICE:

Be careful not to damage the oil receiver pipe No.1 (MTM).

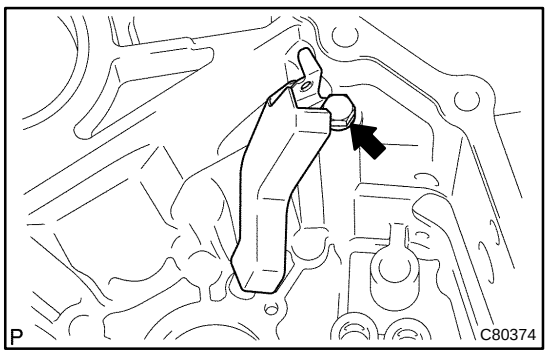

42. REMOVE OIL RECEIVER PIPE NO.2 (MTM)

(a) Remove the bolt and oil receiver pipe No.2 (MTM) from the manual transmission case.

NOTICE:

Be careful not to damage the oil receiver pipe No.2 (MTM).

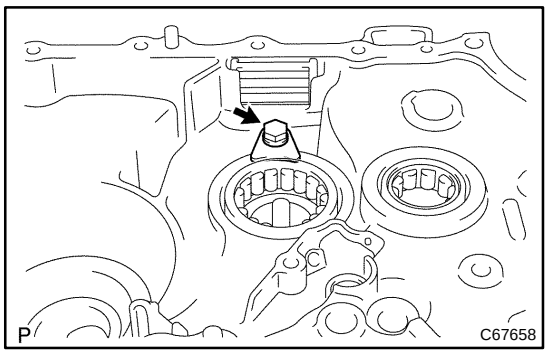

43. REMOVE BEARING LOCK PLATE

(a) Remove the bolt and bearing lock plate from the transaxle case.

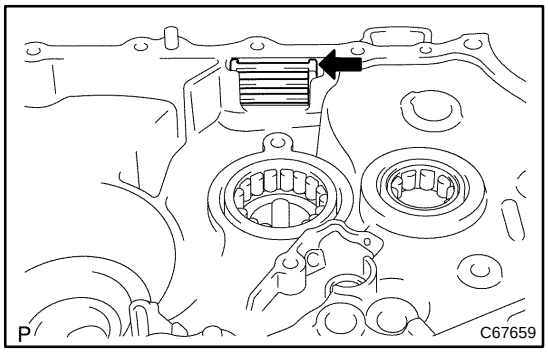

44. REMOVE TRANSMISSION MAGNET

(a) Remove the transmission magnet from the transaxle case.

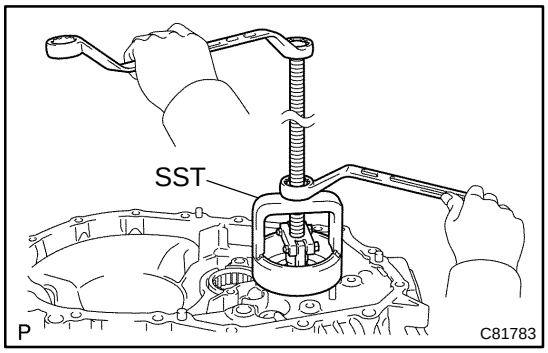

45. REMOVE INPUT SHAFT FRONT BEARING

(a) Using SST, remove the input shaft front bearing from the transaxle case.

SST 09612–65014 (09612–01050, 09612–01060)

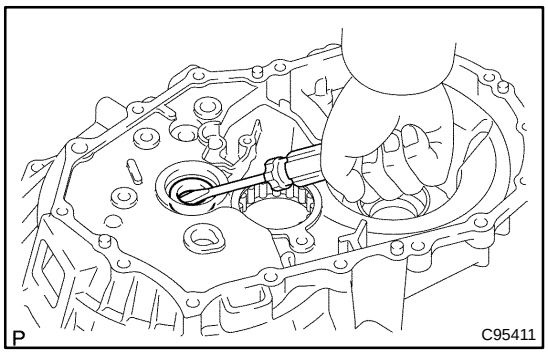

46. REMOVE FRONT TRANSAXLE CASE OIL SEAL

(a) Using a screwdriver, remove the front transaxle case oil seal from the transaxle case.

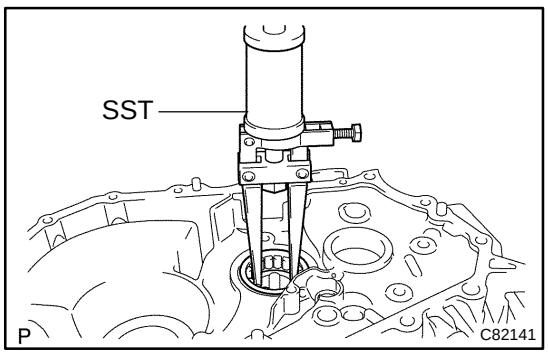

47. REMOVE OUTPUT SHAFT FRONT BEARING

(a) Using SST, remove the output shaft front bearing from the transaxle case.

SST 09308–00010

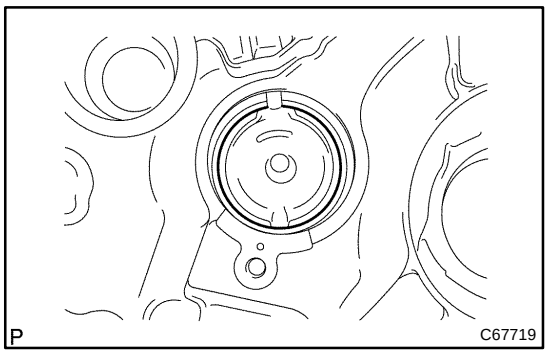

48. REMOVE OUTPUT SHAFT (MTM) COVER

(a) Remove the output shaft (MTM) cover from the transaxle case.

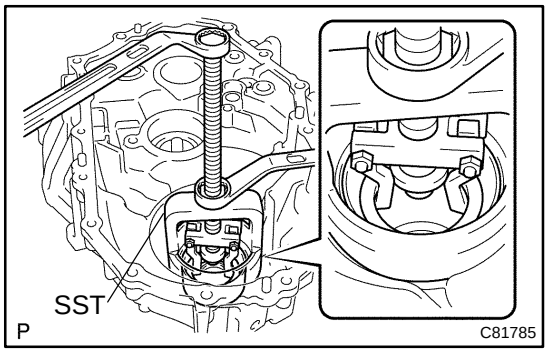

49. REMOVE FR DIFFERENTIAL CASE FRONT TAPERED ROLLER BEARING

(a) Using SST, remove the FR differential case front tapered roller bearing (outer race) and shim from the transaxle case.

SST 09612–65014 (09612–01040, 09612–01050)

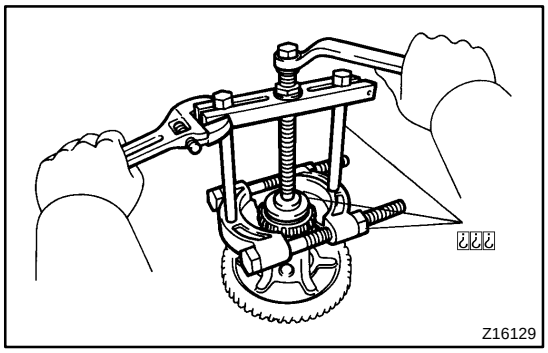

(b) Using SST, remove FR differential case front tapered roller bearing (inner race) from the front differential case.

SST 09950–00020, 09950–00030, 09950–40011 (09957–04010), 09950–60010 (09951–00360)

NOTICE:

Be careful not to damage bearing.

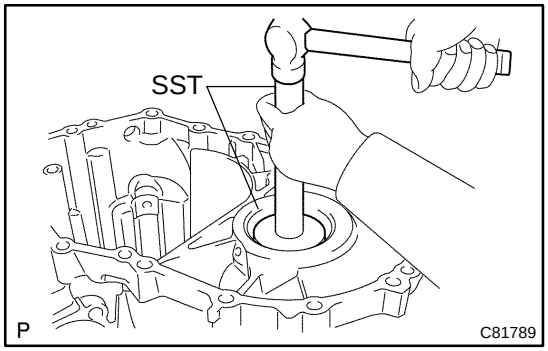

50. REMOVE TRANSAXLE CASE OIL SEAL

(a) Using SST and a hammer, drive out the transaxle case oil seal from the transaxle case.

SST 09950–60010 (09951–00530), 09950–70010 (09951–07150)

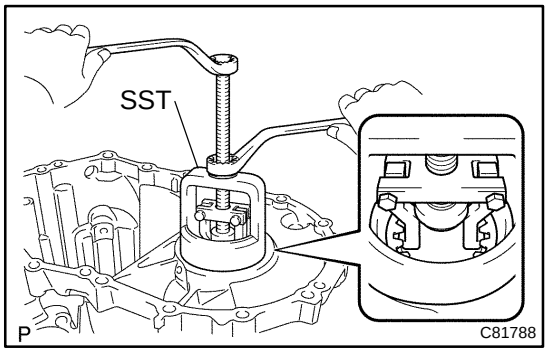

51. REMOVE FR DIFFERENTIAL CASE REAR TAPERED ROLLER BEARING

(a) Using SST, remove the FR differential case rear tapered roller bearing (outer race) and shim from the manual transmission case.

SST 09612–65014 (09612–01040, 09612–01050)

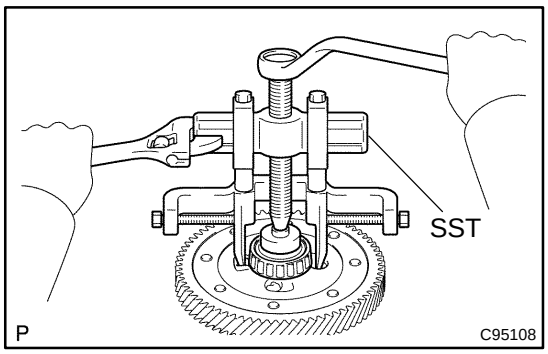

(b) Using SST and a hammer, remove the FR differential case rear tapered roller bearing (inner race) from the front differential case.

SST 09950–40011 (09951–04010, 09952–04010, 09953–04020, 09954–04010, 09955–04061, 09957–04010, 09958–04011), 09950–60010 (09951–00360)

NOTICE:

Be careful not to damage bearing.

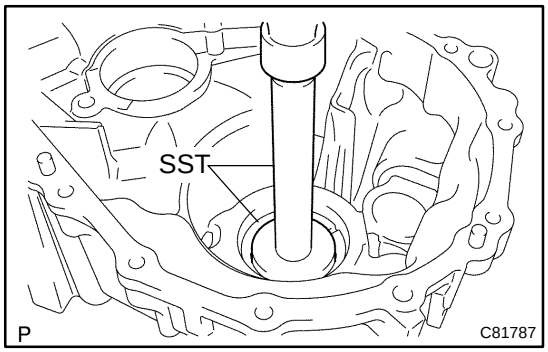

52. REMOVE TRANSMISSION CASE OIL SEAL

(a) Using SST and a hammer, remove the transmission case oil seal from the manual transmission case.

SST 09950–60010 (09951–00600), 09950–70010 (09951–07100)

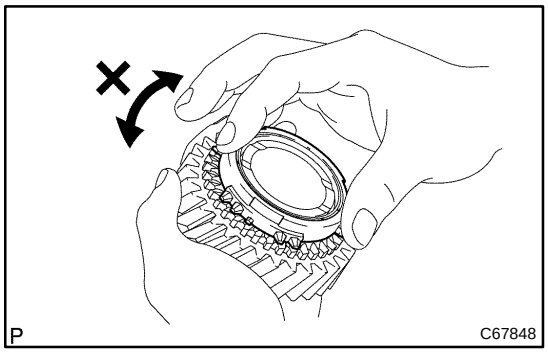

53. INSPECT SYNCHRONIZER RING NO.3

(a) Check for wear or damage.

(b) Check the braking effect of the synchronizer ring. Turn the synchronizer ring in one direction while pushing it to the gear cone, check that the ring locks.

If the braking effect is insufficient, apply a small amount of the fine lapping compound between the synchronizer ring and gear cone. Lightly rub the synchronizer ring and gear cone together.

NOTICE:

Ensure the file lapping compound is completely washed off after rubbing.

(c) Check again the breaking effect of the synchronizer ring.

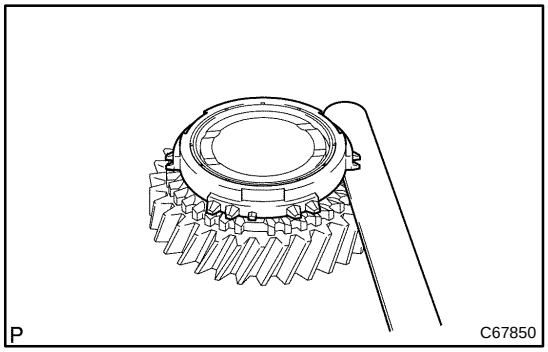

(d) Using a feeler gauge, measure the clearance between the synchronizer ring back and gear spline end.

Minimum clearance: 0.75 mm (0.0295 in.)

If the clearance is less than minimum, replace the synchronizer ring and gear cone by applying a small amount of the fine lapping compound on gear cone.

NOTICE:

Ensure the fine lapping compound is completely washed off after rubbing.

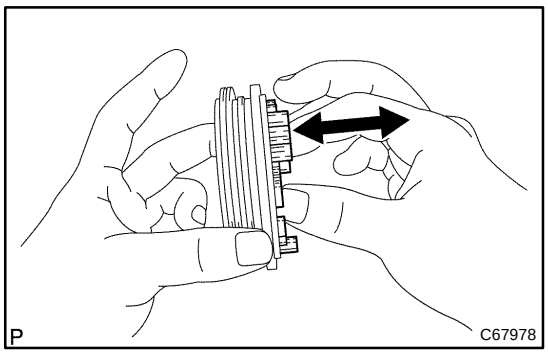

54. INSPECT TRANSMISSION HUB SLEEVE NO.3

(a) Check the sliding condition between the transmission hub sleeve No. 3 and transmission clutch hub No.3.

(b) Check that spline gear's of the transmission hub sleeve No.3 is not worn down.

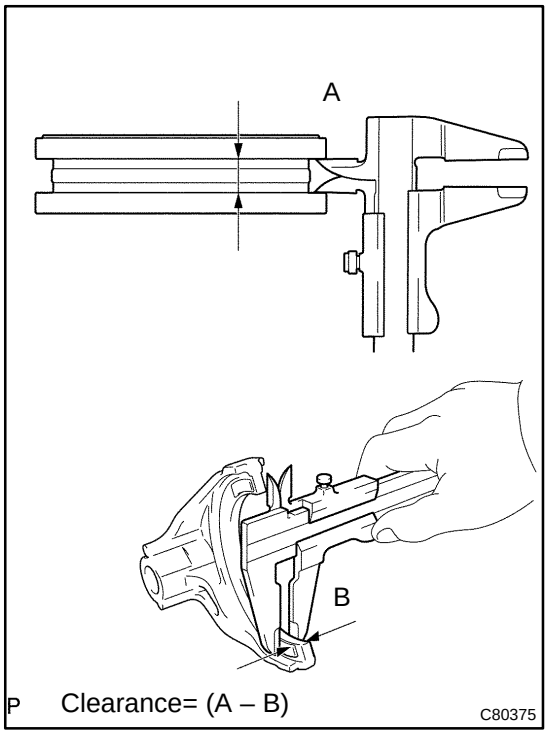

(c) Using a vernier calipers, inspect the transmission hub sleeve No.3 and gear shift fork No.3 as shown in the illustration.

Standard clearance:

0.3 – 0.5 mm (0.012 – 0.020 in.)

If the clearance is out of specification, replace the transmission hub sleeve No.3 and gear shift fork No.3.

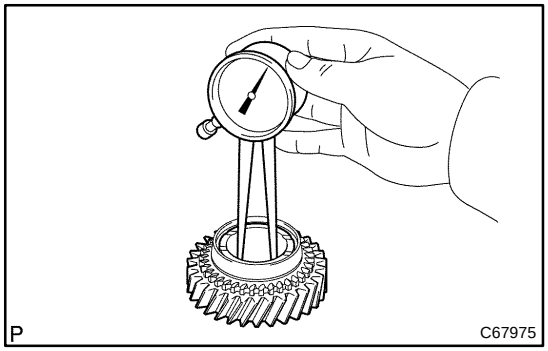

55. INSPECT 5TH GEAR

(a) Using a caliper gauge, inspect 5th gear as shown in the illustration.

5th gear inner diameter:

Standard inner diameter: mm (in.)	Maximum inner diameter: mm (in.)
29.915 – 29.931 (1.1778 – 1.1783)	29.931 (1.1783)

If the inner diameter exceeds the maximum, replace the 5th gear.

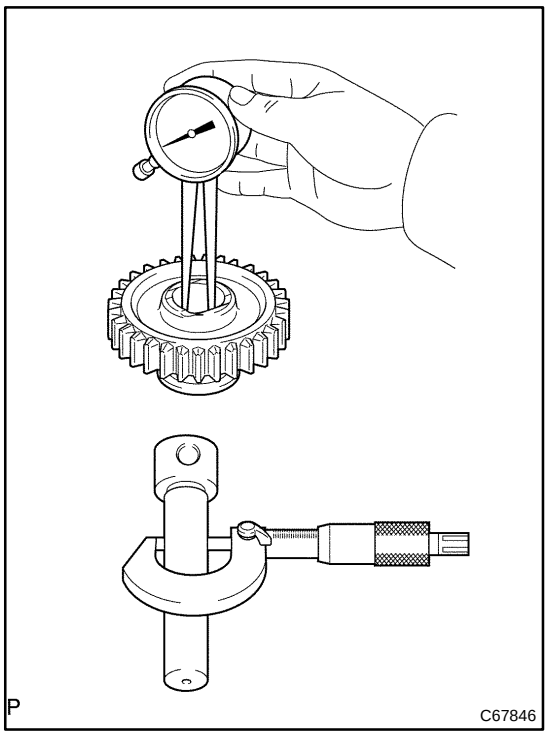

56. INSPECT REVERSE IDLER GEAR SUB–ASSY

(a) Using a caliper gauge, inspect the reverse idler gear sub–assy as shown in the illustration.

Reverse idler gear sub–assy inner diameter:

Standard inner diameter: mm (in.)	Maximum inner diameter: mm (in.)
18.040 – 18.058 (0.7102 – 0.7109)	18.058 (0.7109)

If the inner diameter exceeds the maximum, replace the reverse idler gear sub–assy.

(b) Using a micrometer, inspect the reverse idler gear shaft as shown in the illustration.

Reverse idler gear shaft outer diameter:

Standard inner diameter: mm (in.)	Minimum outer diameter: mm (in.)
17.966 – 17.984 (0.7073 – 0.7080)	17.966 (0.7073)

If the outer diameter is below the minimum, replace the reverse idler gear shaft.

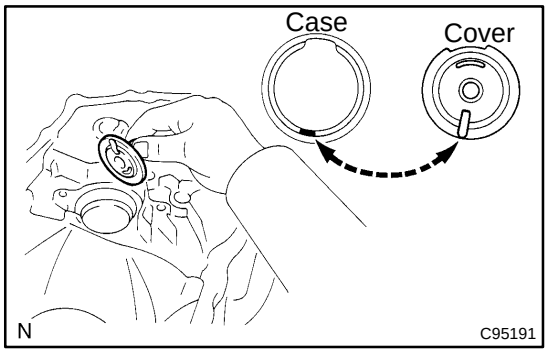

57. INSTALL OUTPUT SHAFT (MTM) COVER

(a) Coat the output shaft (MTM) cover with MP grease, install it to the transaxle case.

NOTICE:

Install the output shaft (MTM) cover projection into the case side hollow.

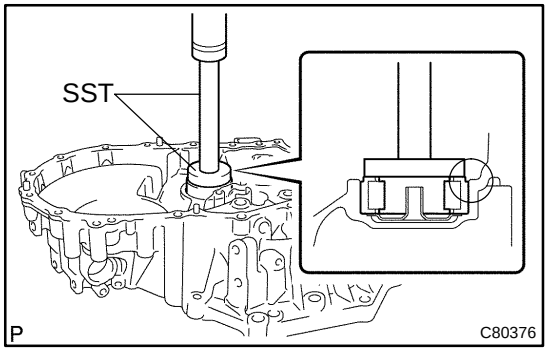

58. INSTALL OUTPUT SHAFT FRONT BEARING

(a) Coat a new output shaft front bearing with gear oil, using SST and a press, install it to the transaxle case.

SST 09950–60010 (09951–00550), 09950–70010 (09951–07150)

NOTICE:

- **Be sure to install a new bearing in the correct direction, as shown in the illustration.**
- **When replacing the output shaft front bearing, replace the output shaft front bearing inner race along with it.**

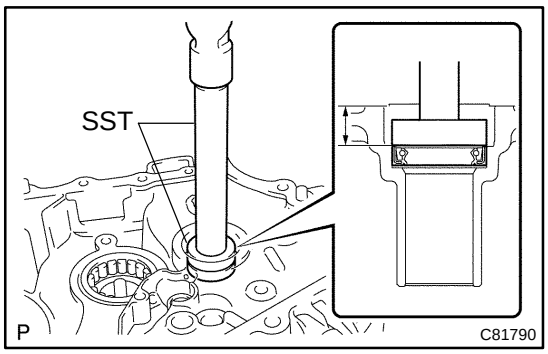

59. INSTALL FRONT TRANSAXLE CASE OIL SEAL

(a) Using SST and a hammer, install a new front transaxle case oil seal to the transaxle case.

SST 09950–60010 (09951–00370), 09950–70010 (09951–07150)

Drive in depth: 15.6 – 16.0 mm (0.6142 – 0.6299 in.)

(b) Coat the lip of the front transaxle case oil seal with MP grease.

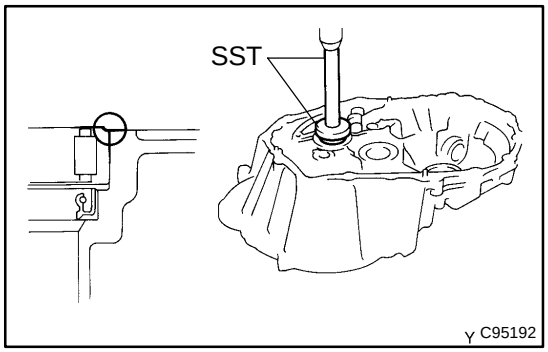

60. INSTALL INPUT SHAFT FRONT BEARING

(a) Coat a new input shaft front bearing with MP grease, using SST and a press, install it to the transaxle case.

SST 09950–60010 (09951–00420), 09950–70010 (09951–07150)

Drive in depth: 0 – 0.3 mm (0 – 0.012 in.)

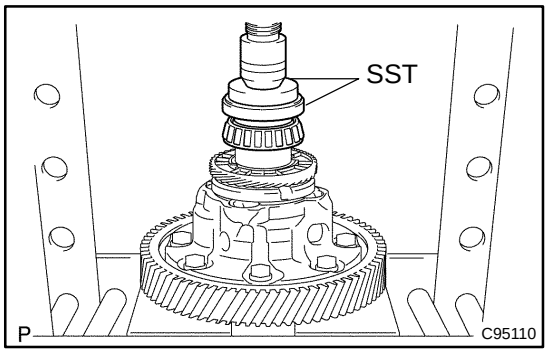

61. INSTALL FR DIFFERENTIAL CASE FRONT TAPERED ROLLER BEARING

(a) Using SST and a press, install a new FR differential case front tapered roller bearing (inner race) to the front differential case.

SST 09350–32014 (09351–32120), 09950–60010 (09951–00530)

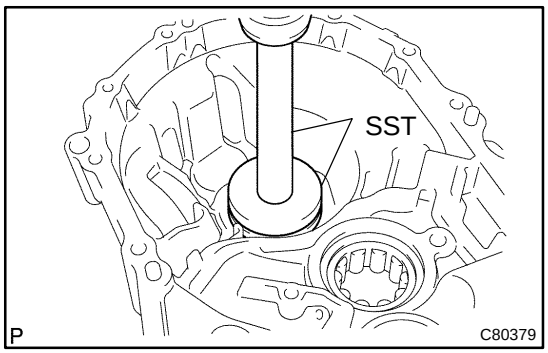

(b) Using SST and a press, install a new FR differential case front tapered roller bearing (outer race) with shim to the transaxle case.

SST 09950–60020 (09951–00680), 09950–70010 (09951–07150)

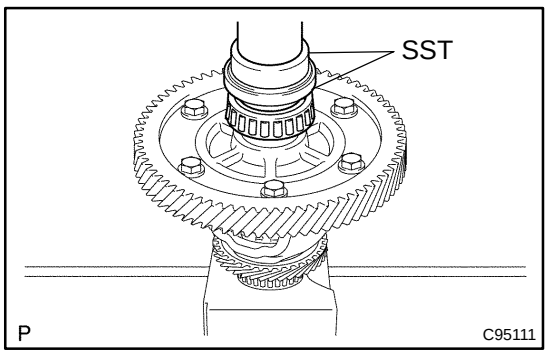

62. INSTALL FR DIFFERENTIAL CASE REAR TAPERED ROLLER BEARING

(a) Using SST and a press, install a new FR differential case rear tapered roller bearing (inner race) to the front differential case.

SST 09350–32014 (09351–32120), 09950–60010 (09951–00530)

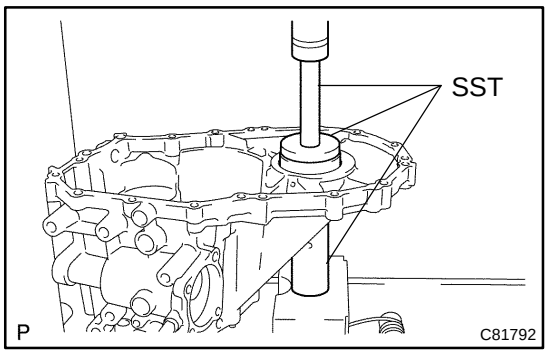

(b) Using SST and a press, install a new FR differential case rear tapered roller bearing (outer race) with shim to the manual transmission case.
SST 09309–36010, 09950–60020 (09951–00710), 09950–70010 (09951–07150)

HINT:
Use a shim of the same thickness with the removed one.

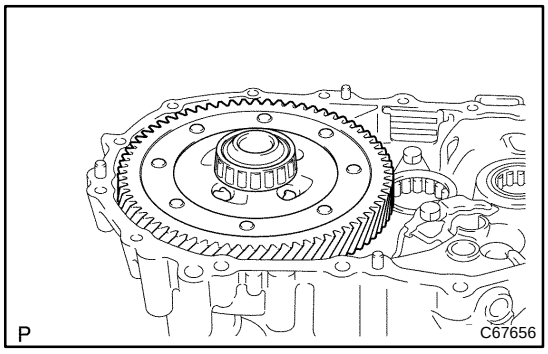

63. ADJUST DIFFERENTIAL SIDE BEARING RRELOAD

(a) Coat the differential case assy with gear oil, install it to the transaxle case.

(b) Install the manual transmission case with 16 bolts.
Torque: 29.4 N·m (300 kgf·cm, 22 ft·lbf)

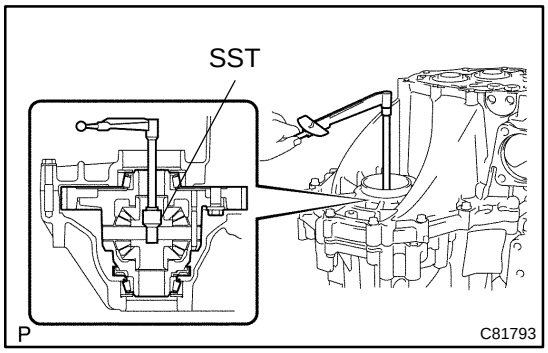

(c) Using SST and a torque wrench, turn the differential case assy to the right and left 2 or 3 times to allow the bearings to settle.
SST 09564–32011

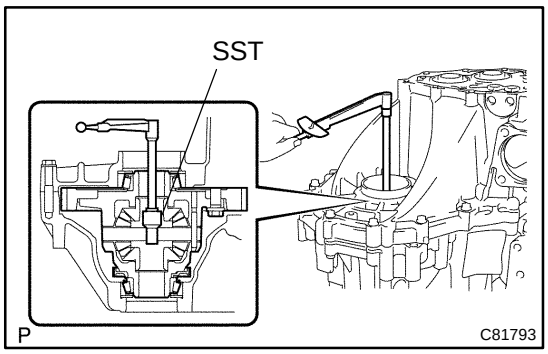

(d) Using SST and a torque wrench, measure the preload.
SST 09564–32011
Preload (at starting):
New bearing:
0.78 – 1.57 N·m (8 – 16 kgf·cm, 6.9 – 13.9 in.·lbf)

If the preload is out of specification, select another shim.

Shim thickness:

Mark	Thickness: mm (in.)	Mark	Thickness: mm (in.)
AA	2.10 (0.0827)	LL	2.60 (0.1024)
BB	2.15 (0.0846)	MM	2.65 (0.1043)
CC	2.20 (0.0866)	NN	2.70 (0.1063)
DD	2.25 (0.0886)	PP	2.75 (0.1083)
EE	2.30 (0.0906)	QQ	2.80 (0.1102)
FF	2.35 (0.0925)	RR	2.85 (0.1122)
GG	2.40 (0.0945)	SS	2.90 (0.1142)
HH	2.45 (0.0965)	TT	2.95 (0.1161)
JJ	2.50 (0.0984)	UU	3.00 (0.1181)
KK	2.55 (0.1004)	–	–

HINT:
The preload will change by about 0.3 – 0.4 N·m (3 – 4 kgf·cm, 2.6 – 3.5 in.·lbf) corresponding to a change of 0.05 mm (0.0020 in.) in shim thickness.

(e) Remove the 16 bolts and manual transmission case from the transaxle case.

(f) Remove the differential case assy from the transaxle case.

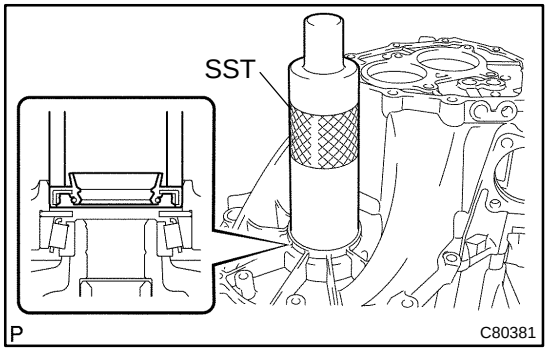

64. INSTALL TRANSMISSION CASE OIL SEAL

(a) Using SST and a hammer, install a new transmission case oil seal to the manual transmission case.
SST 09316–60011 (09316–00011)
Drive in depth: 9.9 ± 0.3 mm (0.390 ± 0.012 in.)

(b) Coat the lip of the transmission case oil seal with MP grease.

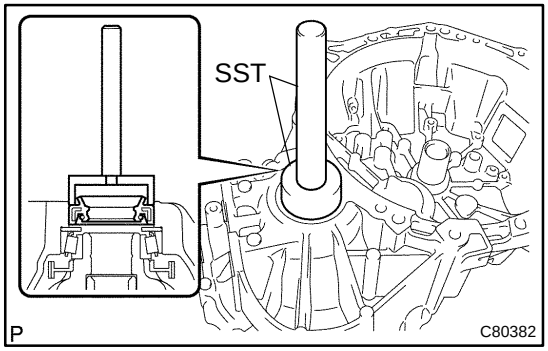

65. INSTALL TRANSAXLE CASE OIL SEAL

(a) Using SST and a hammer, install a new transaxle case oil seal in the transaxle case.
SST 09710–20011 (09710–06071), 09950–70010 (09951–07150)
Drive in depth: 1.9 ± 0.3 mm (0.075 ± 0.012 in.)

(b) Coat the lip of the transaxle case oil seal with MP grease.

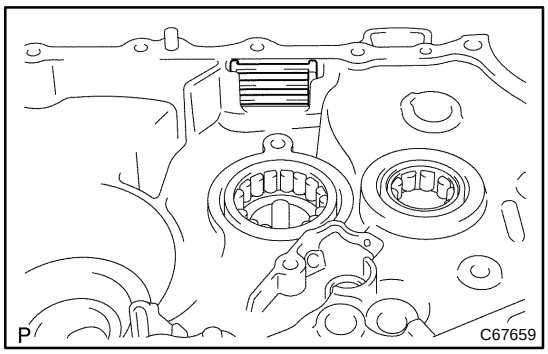

66. INSTALL TRANSMISSION MAGNET

(a) Clean the transmission magnet, install it to the transaxle case.

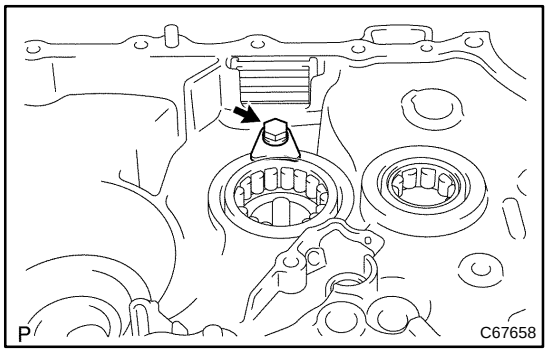

67. INSTALL BEARING LOCK PLATE

(a) Install the bearing lock plate with the bolt.
Torque: 11.3 N·m (115 kgf·cm, 8 ft·lbf)

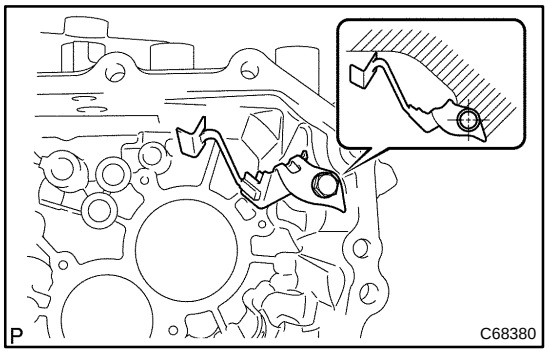

68. INSTALL OIL RECEIVER PIPE NO.1 (MTM)

(a) Install the oil receiver pipe No.1 (MTM) with bolt to the manual transmission case.
Torque: 17.2 N·m (175 kgf·cm, 13 ft·lbf)

NOTICE:

- **Prevent the oil receiver pipe No.1 (MTM) from being deformed.**
- **Install the oil receiver pipe No.1 (MTM) while placing it against the manual transmission case, as shown in the illustration.**

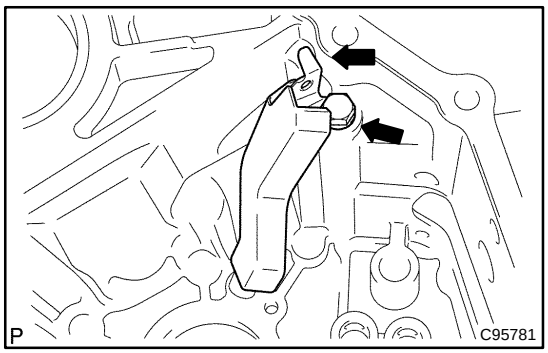

69. INSTALL OIL RECEIVER PIPE NO.2 (MTM)

(a) Install the oil receiver pipe No.2 (MTM) with bolt to the manual transmission case.
Torque: 17.2 N·m (175 kgf·cm, 13 ft·lbf)

NOTICE:

- **Prevent the oil receiver pipe No.2 (MTM) from being deformed.**
- **Install the oil receiver pipe No.2 (MTM) while placing it against the manual transmission case, as shown in the illustration.**

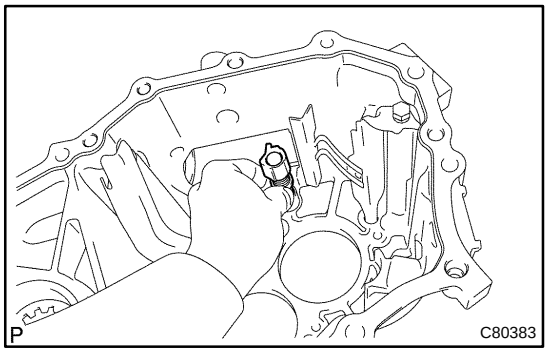

70. INSTALL REVERSE RESTRICT PIN ASSY

(a) Install the reverse restrict pin assy to the manual transmission case.

NOTICE:

Do not set the reverse restrict pin assy in incorrect orientation.

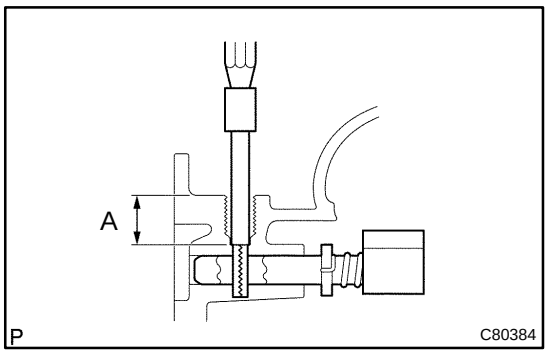

(b) Using a pin punch (ϕ 5 mm) and hammer, install the slotted pin to the reverse restrict pin assy.
Drive in depth (A):
15.5 – 16.5 mm (0.6102 – 0.6496 in.)

(c) Apply sealant to the reverse restrict pin plug.
Sealant:
Part No. 08833–00080, THREE BOND 1344, LOCTITE 242 or equivalent

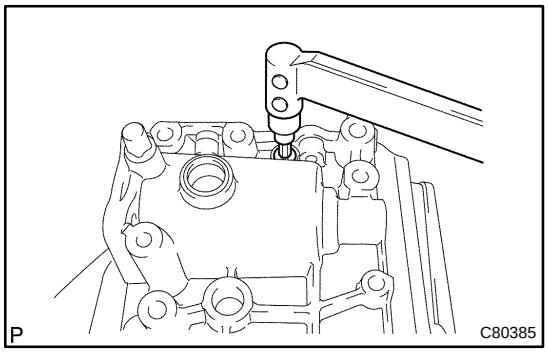

(d) Using a hexagon wrench and a torque wrench, install the reverse restrict pin plug to the manual transmission case.
Torque: 12.7 N·m (130 kgf·cm, 9 ft·lbf)

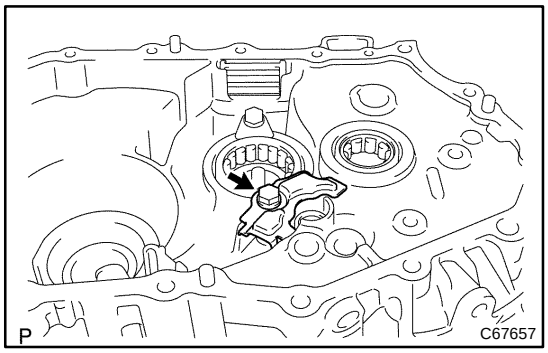

71. INSTALL MANUAL TRANSAXLE CASE RECEIVER

(a) Install the manual transaxle case receiver with the bolt to the transaxle case.
Torque: 11.3 N·m (115 kgf·cm, 8 ft·lbf)

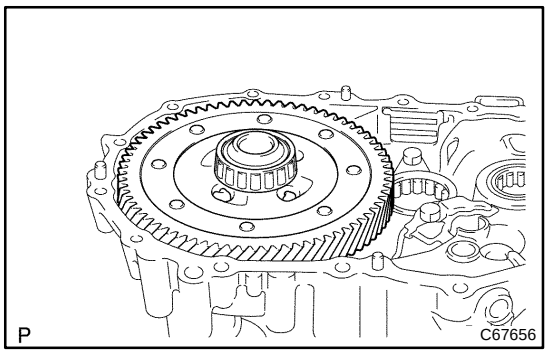

72. INSTALL DIFFERENTIAL CASE ASSY

(a) Coat the differential case tapered roller bearing with gear oil, install the differential case assy to the transaxle case.

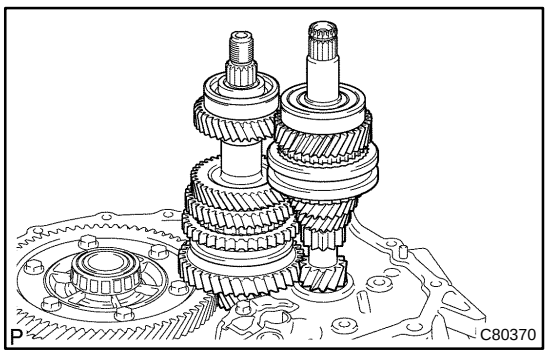

73. INSTALL INPUT SHAFT ASSY

(a) Coat the sliding and rotating surface of the input and out put shafts with gear oil, install them to the transaxle case.

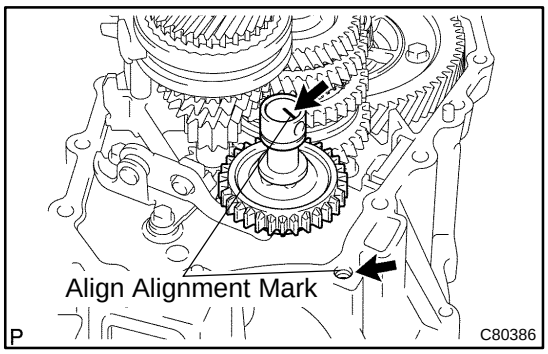

74. INSTALL REVERSE IDLER GEAR SUB–ASSY

(a) Coat the reverse idler gear sub–assy, thrust washer and reverse idler gear shaft with gear oil, install them as shown in the illustration.

HINT:

Align the mark on the reverse idler gear shaft with the bolt hole shown in the illustration.

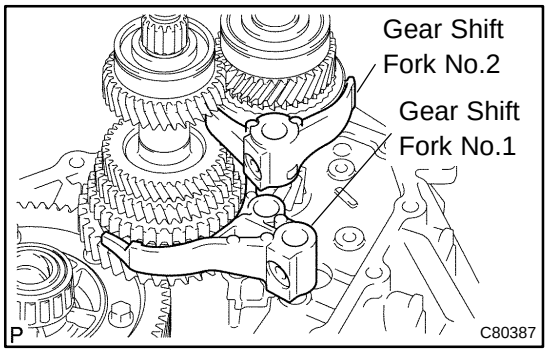

75. INSTALL GEAR SHIFT FORK SHAFT SUB–ASSY NO.1

(a) Coat the gear shift fork No.1 and gear shift fork No.2 with gear oil, install them.

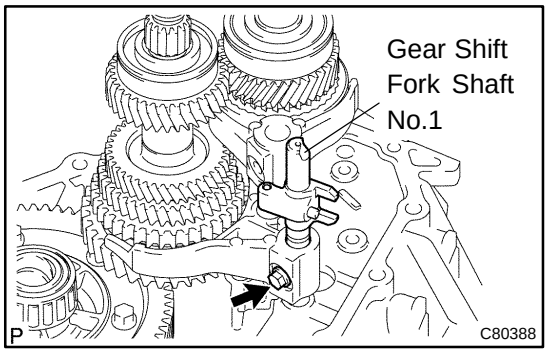

(b) Coat the gear shift fork shaft sub–assy No.1 with gear oil, install it.

(c) Apply sealant to the shift fork lock bolt.
Sealant:
Part No. 08833–00080, THREE BOND 1344, LOCTITE 242 or equivalent

(d) Install the gear shift fork lock bolt.
Torque: 15.7 N·m (160 kgf·cm, 12 ft·lbf)

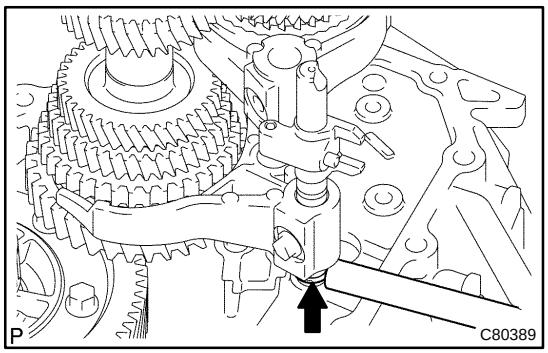

(e) Using a brass bar and a hammer, install the shaft snap ring to the gear shift fork shaft No.1.

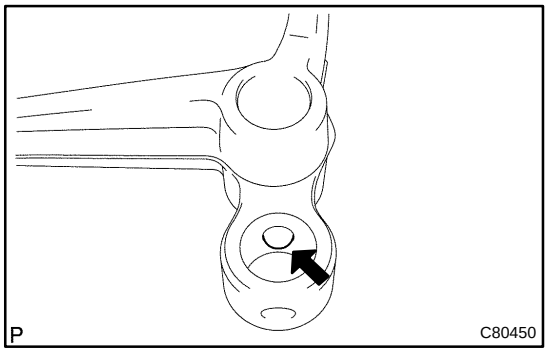

76. INSTALL GEAR SHIFT FORK SHAFT NO.3

(a) Coat the 2 balls with MP grease, install them to the reverse shift fork.

(b) Install the reverse shift fork to the gear shift fork shaft No.3.

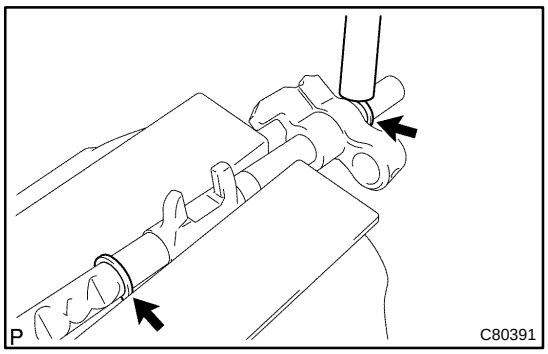

(c) Using a brass bar and a hammer, install the 2 shift fork shaft snap rings to the gear shift fork shaft No.3.

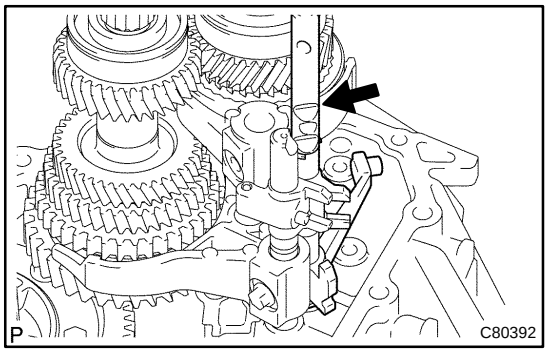

(d) Coat the gear shift fork shaft No.3 with gear oil, install it.

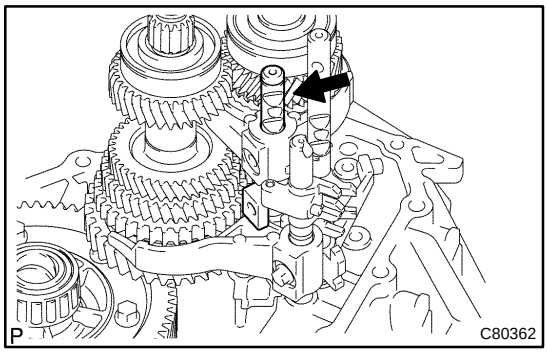

77. INSTALL GEAR SHIFT FORK SHAFT NO.2

(a) Coat the gear shift head No.1 and gear shift fork shaft No.2 with gear oil, install them.

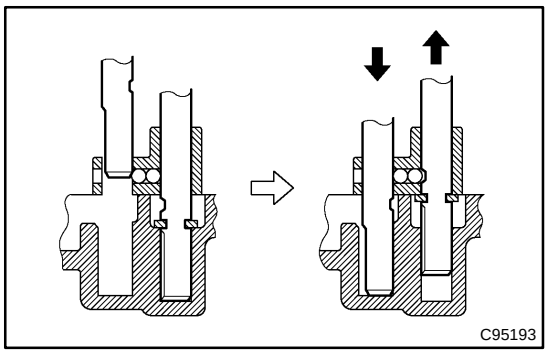

NOTICE:
To avoid the interference of the 2 shift fork balls, lift up the gear shift fork shaft NO.3 at the position shown in the illustration.

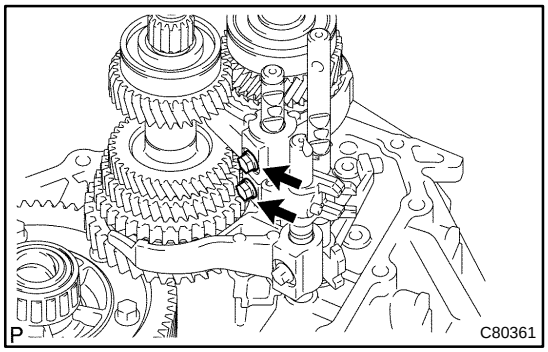

(b) Coat the 2 shift lock bolts with sealant, install then to the gear shift fork No.2 and gear shift head No.1.
Sealant:
Part No. 08833–00080, THREE BOND 1344, LOCTITE 242 or equivalent
Torque: 15.7 N·m (160 kgf·cm, 12 ft·lbf)

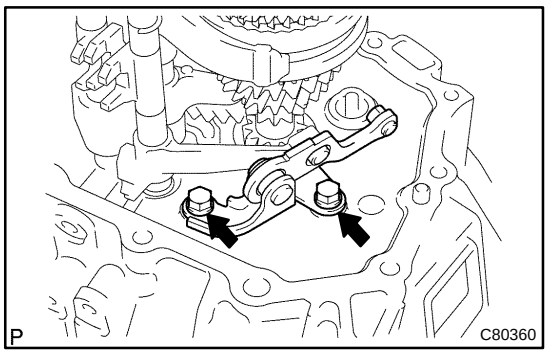

78. INSTALL REVERSE SHIFT ARM BRACKET ASSY

(a) Install the reverse shift arm bracket assy with 2 bolts to the transaxle case.
Torque: 17.2 N·m (175 kgf·cm, 13 ft·lbf)

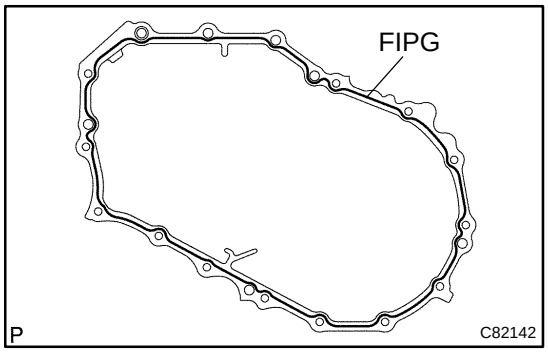

79. INSTALL MANUAL TRANSMISSION CASE

(a) Apply FIPG to the manual transmission case, as shown in the illustration.
FIPG:
Part No. 08826–00090, THREE BOND 1281 or equivalent

NOTICE:
Parts must be assembled within 10 minutes of application. Otherwise, the packing (FIPG) material must be removed and reapplied.

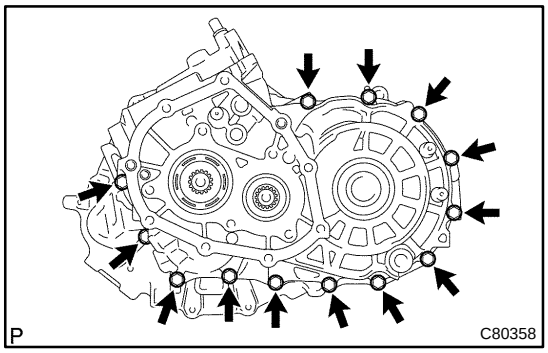

(b) Coat the 13 bolts with sealant, install them to the manual transmission case.
Sealant:
Part No. 08833–00080, THREE BOND 1344, LOCTITE 242 or equivalent
Torque: 29.4 N·m (300 kgf·cm, 22 ft·lbf)

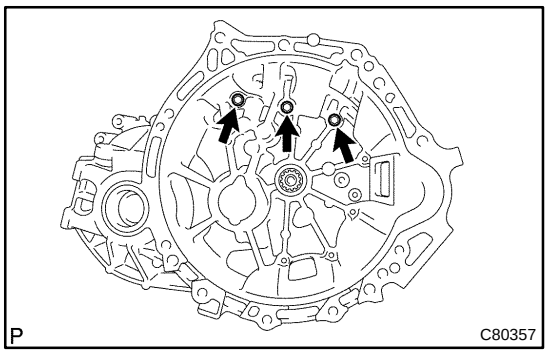

(c) Coat the 3 bolts with sealant, install them to the transaxle case.
Sealant:
Part No. 08833–00080, THREE BOND 1344, LOCTITE 242 or equivalent
Torque: 29.4 N·m (300 kgf·cm, 22 ft·lbf)

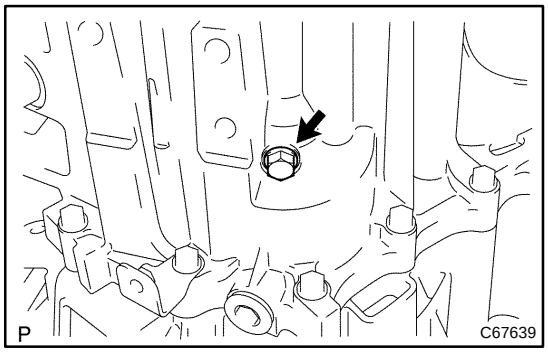

80. INSTALL REVERSE IDLER GEAR SHAFT BOLT

(a) Coat the reverse idler gear shaft bolt with sealant, install it with a new gasket.
Sealant:
Part No. 08833–00080, THREE BOND 1344, LOCTITE 242 or equivalent
Torque: 29.4 N·m (300 kgf·cm, 22 ft·lbf)

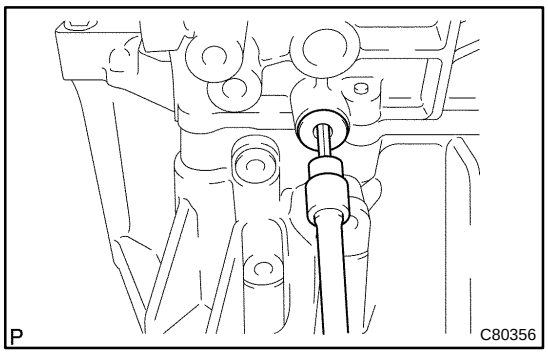

81. INSTALL LOCK BALL ASSY NO.1

(a) Coat the lock ball assy No.1 with sealant, install it with using a hexagon wrench.
Sealant:
Part No. 08833–00080, THREE BOND 1344, LOCTITE 242 or equivalent
Torque: 39.2 N·m (400 kgf·cm, 29 ft·lbf)

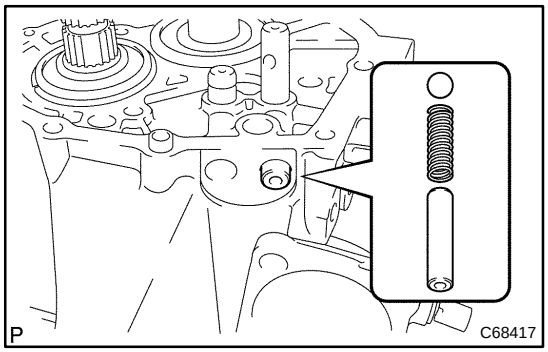

82. INSTALL SHIFT DETENT BALL

(a) Install the 2 shift detent balls, 2 springs with 2 seats to the manual transmission case.

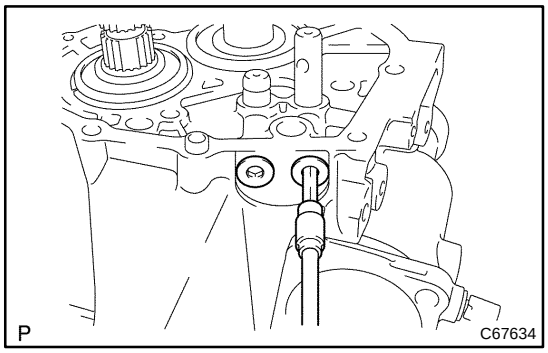

(b) Coat the 2 shift detent ball plugs with sealant, install them with using a hexagon wrench.
Sealant:
Part No. 08833–00080, THREE BOND 1344, LOCTITE 242 or equivalent
Torque: 24.5 N·m (250 kgf·cm, 18 ft·lbf)

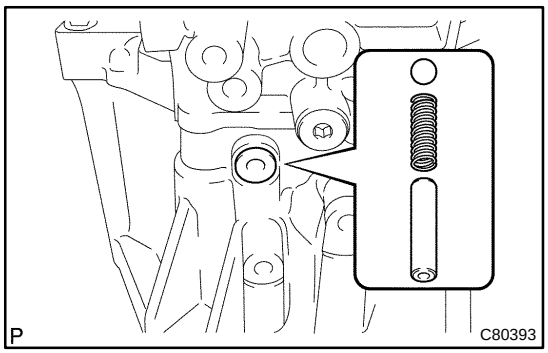

(c) Install the shift detent ball, spring and seat to the transaxle case.

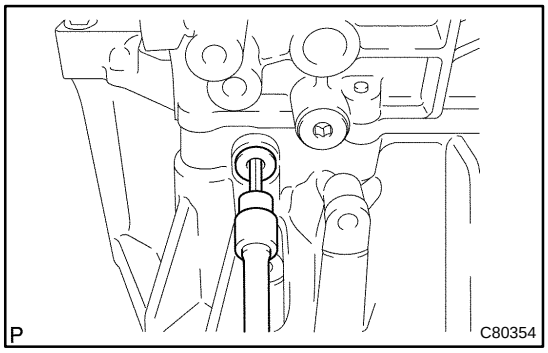

(d) Coat the shift detent ball plug with sealant, install it with using a hexagon wrench.
Sealant:
Part No. 08833–00080, THREE BOND 1344, LOCTITE 242 or equivalent
Torque: 24.5 N·m (250 kgf·cm, 18 ft·lbf)

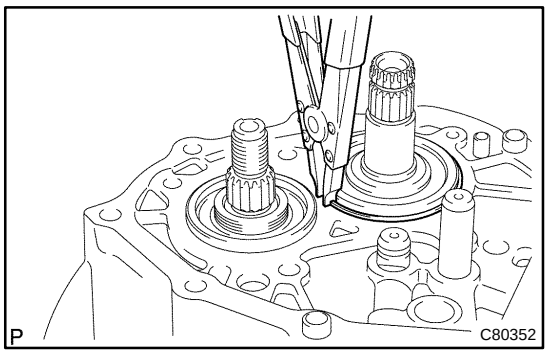

83. INSTALL INPUT SHAFT REAR BEARING HOLE SNAP RING

(a) Using a snap ring expander, install the input shaft rear bearing hole snap ring to the input shaft.

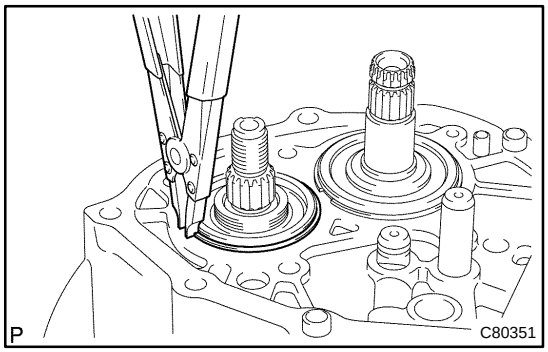

84. INSTALL OUTPUT SHAFT REAR BEARING HOLE SNAP RING

(a) Using a snap ring expander, install the output shaft rear bearing hole snap ring to the output shaft.

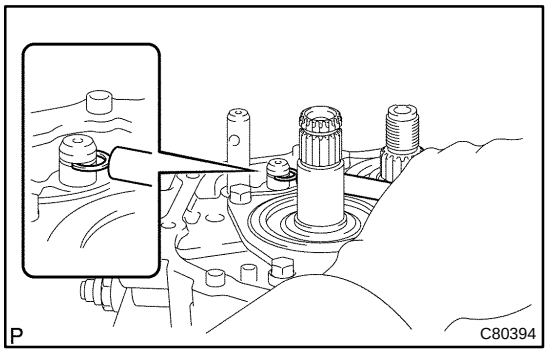

85. INSTALL SHIFT FORK SHAFT SHAFT SNAP RING

(a) Using a brass bar and a hammer, install the shift fork shaft shaft snap ring to the shift fork shaft No.2.

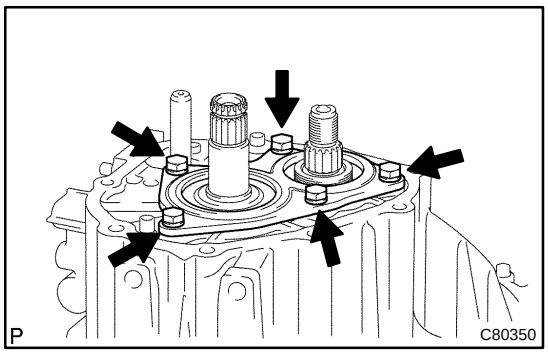

86. INSTALL BEARING RETAINER REAR (MTM)

(a) Coat the 5 bolts with sealant, install them and bearing retainer rear (MTM) to the manual transmission case.
Torque: 27.4 N·m (279 kgf·cm, 20 ft·lbf)

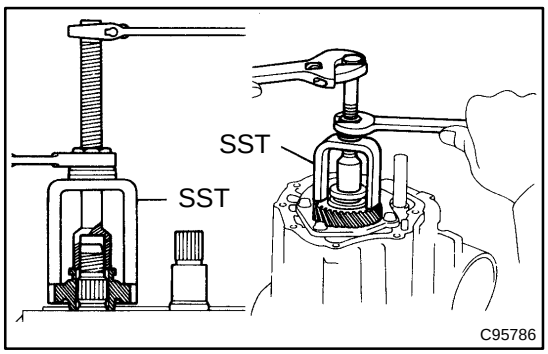

87. INSTALL 5TH DRIVEN GEAR

(a) Using SST, install the 5th driven gear to the output shaft.
SST 09309–12020

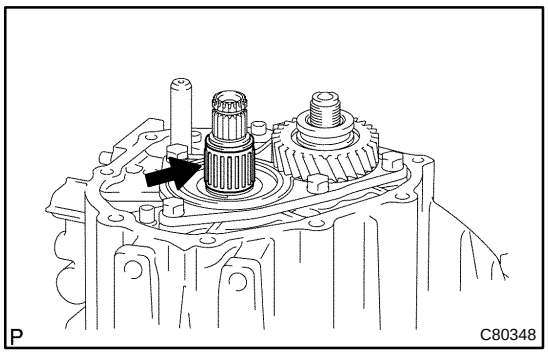

88. INSTALL 5TH GEAR NEEDLE ROLLER BEARING

(a) Coat the 5th gear needle roller bearing and 5th gear bearing spacer with gear oil, install them to the input shaft.

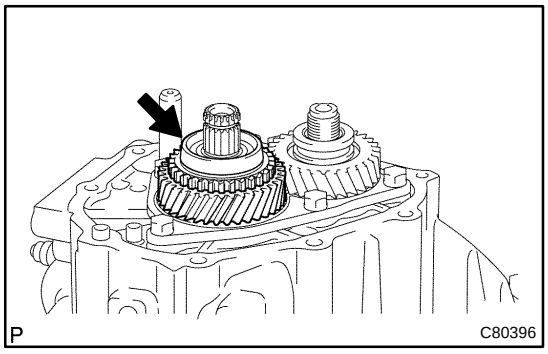

89. INSTALL 5TH GEAR

(a) Coat the 5th gear with gear oil, install it to the input shaft.

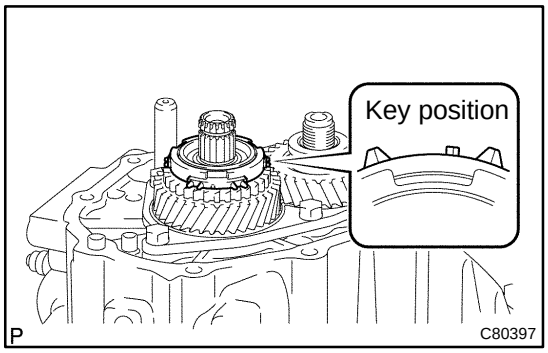

90. INSTALL SYNCHRONIZER RING NO.3

(a) Coat the synchronizer ring No.3 with gear oil, install it to the 5th gear.

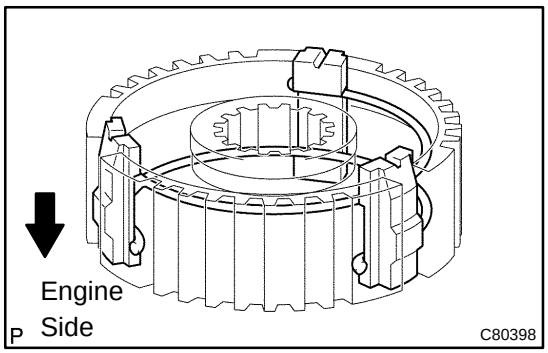

91. INSTALL TRANSMISSION CLUTCH HUB NO.3

(a) Install the 3 synchromesh shifting keys and 2 synchromesh shifting key springs to the transmission clutch hub No.3.

HINT:

Do not set both openings of the shifting key springs in the same position.

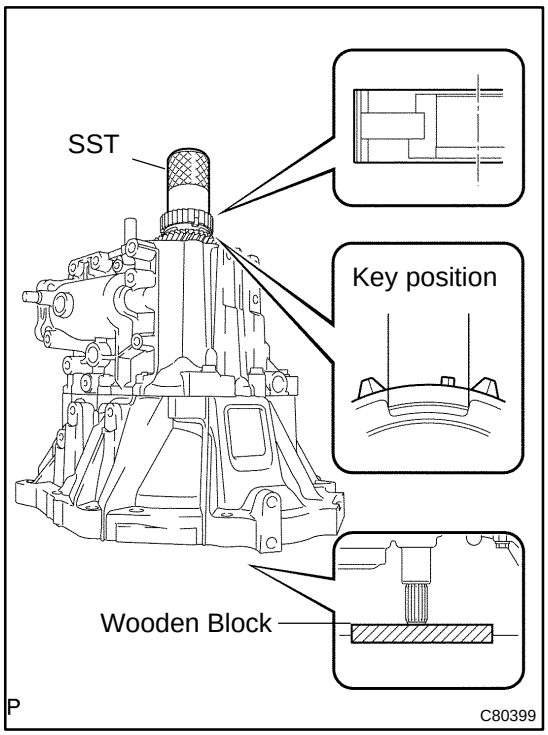

(b) Using SST and a hammer, install the transmission clutch hub No.3 to the input shaft.
SST 09636–20010

HINT:

- Before driving in the No.3 clutch hub assy, place the suitable sized wooden block on the rear side of the input shaft, as shown in the illustration.
- When driving it in, fix the input shaft firmly so that it is not pushed downward. Otherwise the input shaft rear bearing is over loaded, it might be damaged.

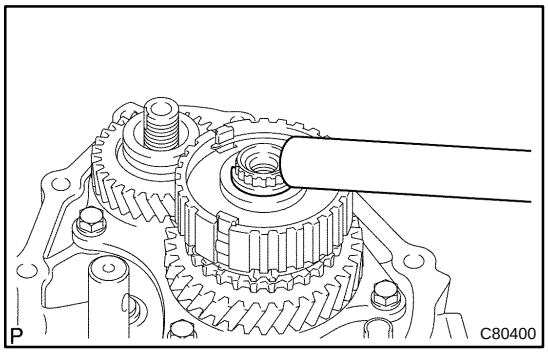

(c) Select a snap ring from the table below that will make the thrust clearance of the transmission clutch hub No.3 below 0.1 mm (0.0039 in.).

Snap ring thickness:

Mark	Thickness: mm (in.)	Mark	Thickness: mm (in.)
A	2.25 (0.0886)	E	2.49 (0.0980)
B	2.31 (0.0909)	F	2.55 (0.1004)
C	2.37 (0.0933)	G	2.61 (0.1028)
D	2.43 (0.0957)	–	–

(d) Using a brass bar and a hammer, install the snap ring to the input shaft.

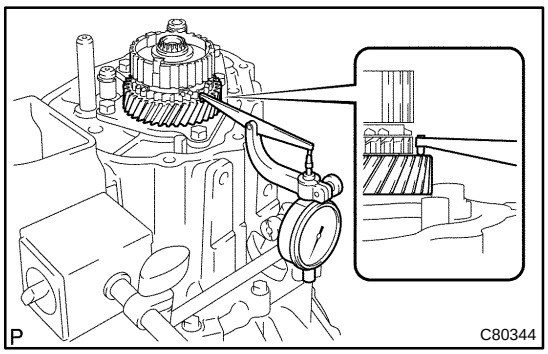

92. INSPECT 5TH GEAR THRUST CLEARANCE

(a) Using a dial indicator, measure the 5th gear thrust clearance.

5th gear thrust clearance:

Standard clearance: mm (in.)	Maximum clearance: mm (in.)
0.10 – 0.57 (0.0039 – 0.0224)	0.57 (0.0224)

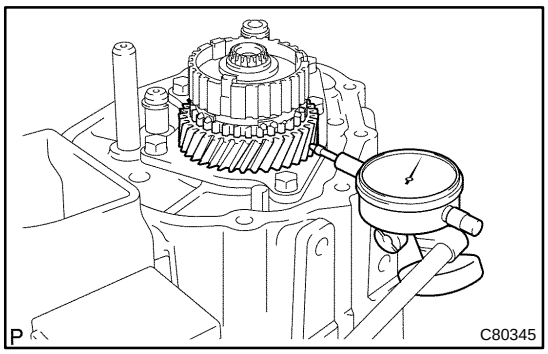

93. INSPECT 5TH GEAR RADIAL CLEARANCE

(a) Using a dial indicator, measure the 5th gear radial clearance.

5th gear radial clearance:

Standard clearance: mm (in.)	Maximum clearance: mm (in.)
KOYO made: 0.015 – 0.058 (0.0006 – 0.0023)	KOYO made: 0.058 (0.0023)
NSK made: 0.015 – 0.056 (0.0006 – 0.0022)	NSK made: 0.056 (0.0022)

If the clearance exceed the maximum value, replace the gear, needle roller bearing or shaft.

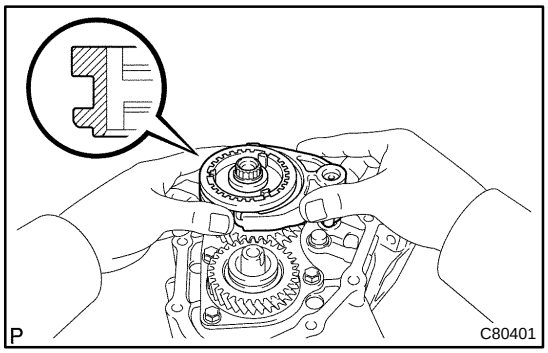

94. INSTALL GEAR SHIFT FORK NO.3

(a) Coat the transmission clutch hub sleeve No.3 with gear oil, install it and gear shift fork No.3 to the transmission clutch hub No.3.

HINT:

Do not set the transmission clutch hub No.3 in incorrect orientation.

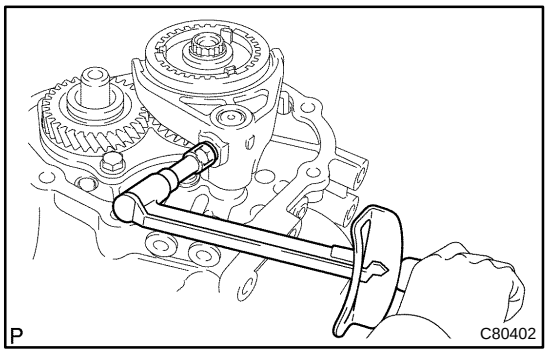

(b) Coat the gear shift lock fork ball with sealant, install it to the gear shift fork No.3.

Sealant:

Part No. 08833–00080, THREE BOND 1344, LOCTITE 242 or equivalent

Torque: 15.7 N·m (160 kgf·cm, 12 ft·lbf)

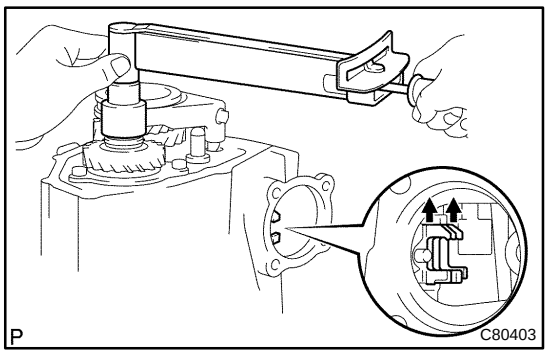

95. INSTALL MANUAL TRANSMISSION OUTPUT SHAFT REAR SET NUT

(a) Engage the gear double meshing.

(b) Install a new manual transmission output shaft rear set nut.

Torque: 117.6 N·m (1,200 kgf·cm, 87 ft·lbf)

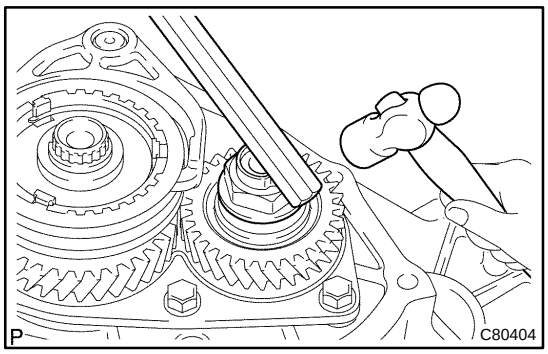

(c) Using a chisel and a hammer, stake the manual transmission output shaft rear set nut.

(d) Disengage the gear double meshing.

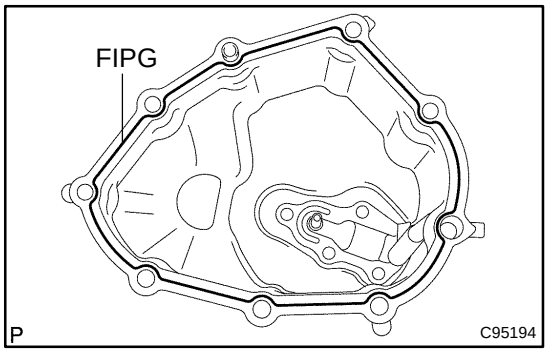

96. INSTALL MANUAL TRANSMISSION CASE COVER SUB–ASSY

(a) Apply FIPG to the manual transmission case cover sub–assy as shown in the illustration.

FIPG:

Part No. 08826–00090, THREE BOND 1281 or equivalent

NOTICE:

Parts must be assembled within 10 minutes of application. Otherwise, the packing (FIPG) material must be removed and reapplied.

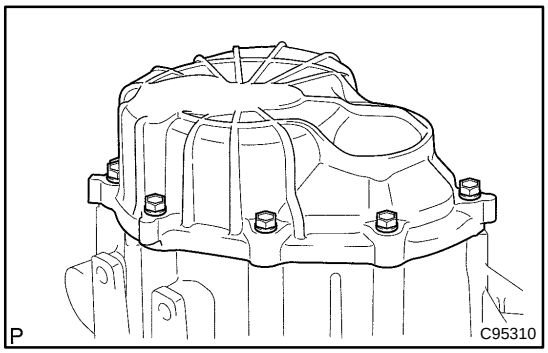

(b) Install the manual transmission case cover sub–assy with the 9 bolts to the manual transmission case.

Torque: 18.1 N·m (185 kgf·cm, 14 ft·lbf)

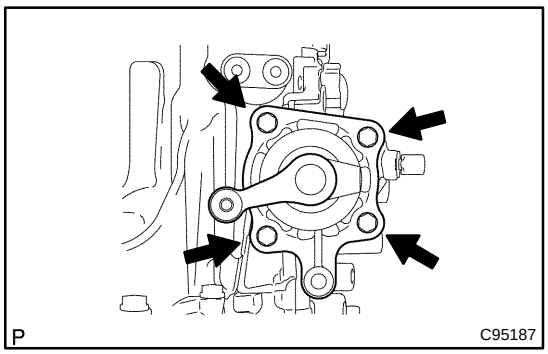

97. INSTALL SHIFT & SELECT LEVER SHAFT ASSY

(a) Coat the 4 bolts with sealant, install them, new gasket and shift & select lever shaft assy to the manual transmission case.

Sealant:

Part No. 08833–00080, THREE BOND 1344, LOCTITE 242 or equivalent

Torque: 19.6 N·m (200 kgf·cm, 14 ft·lbf)

NOTICE:

Set the claws of the shift interlock plate into the shift head part of the gear shift fork shaft securely.

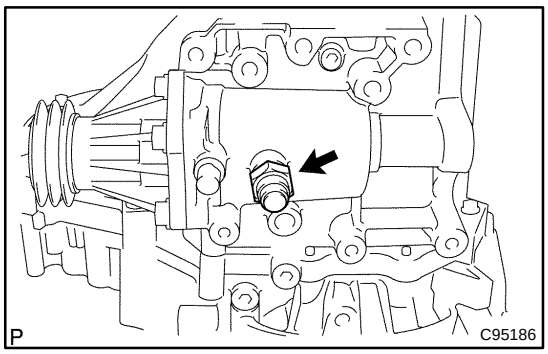

98. INSTALL LOCK BALL ASSY NO.1

(a) Coat the lock ball assy No.1 with sealant, install it to the manual transmission case.
Sealant:
Part No. 08833–00080, THREE BOND 1344, LOCTITE 242 or equivalent
Torque: 29.4 N·m (300 kgf·cm, 22 ft·lbf)

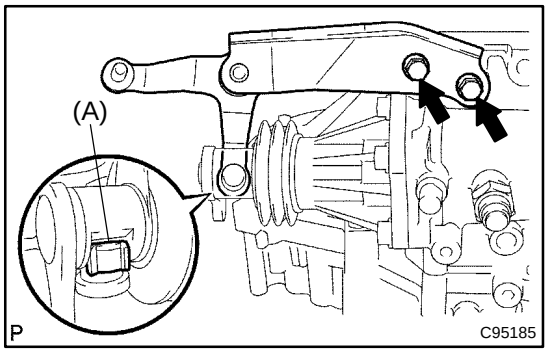

99. INSTALL SELECTING BELL CRANK ASSY

(a) Install the selecting bellcrank assy with control shift lever bush with the 2 bolts to the manual transmission case.
Torque: 24.5 N·m (250 kgf·cm, 18 ft·lbf)

NOTICE:
Apply MP grease to the inside circumferential surface of the control shift lever bush (A).

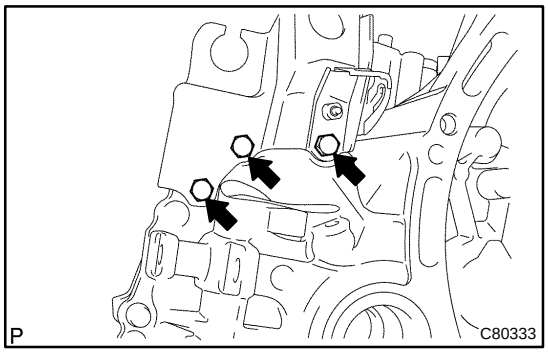

100. INSTALL FLOOR SHIFT CONTROL LEVER HOUSING SUPPORT BRACKET

(a) Install the floor shift control lever housing support bracket with the 3 bolts to the transaxle case.
Torque: 11.3 N·m (115 kgf·cm, 8 ft·lbf)

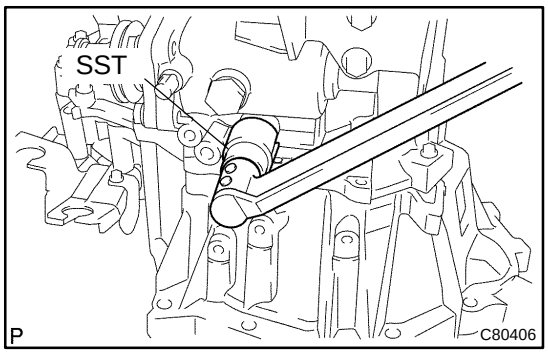

101. INSTALL BACK UP LAMP SWITCH ASSY

(a) Using SST, install the backup lamp switch assy with a new gasket to the manual transmission case.
Torque: 40.2 N·m (410 kgf·cm, 30 ft·lbf)
SST 09817–16011

102. INSTALL SPEEDOMETER DRIVEN HOLE COVER SUB–ASSY (W/ ABS)

(a) Install a new O–ring to the speedometer driver hole cover sub–assy.
(b) Install the speedometer driver hole cover sub–assy with the bolt.
Torque: 11.3 N·m (115 kgf·cm, 8 ft·lbf)

103. INSTALL SPEEDOMETER DRIVEN (MTM) GEAR SUB–ASSY (W/O ABS)

(a) Install the speedometer driven (MTM) gear sub–assy with clip to the speedometer sensor.

104. INSTALL SPEEDOMETER SENSOR (W/O ABS)

(a) Install a new O–ring to the speedometer sensor.
(b) Install the speedometer sensor with the bolt.
Torque: 11.3 N·m (115 kgf·cm, 8 ft·lbf)

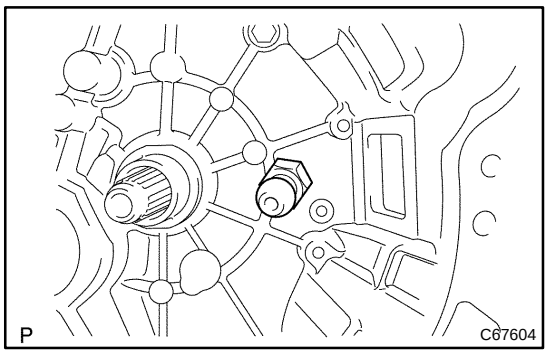

105. INSTALL RELEASE FORK SUPPORT

(a) Install the release fork support to the transaxle case.
Torque: 36.8 N·m (375 kgf·cm, 25 ft·lbf)

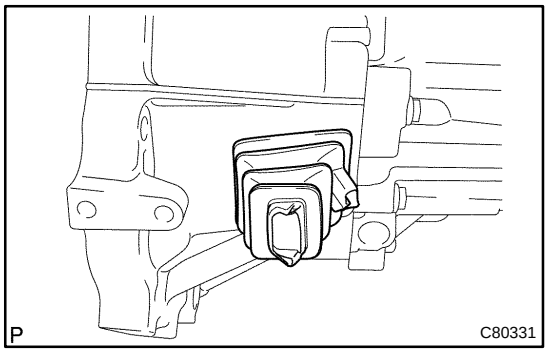

106. INSTALL CLUTCH RELEASE FORK BOOT

(a) Install the clutch release fork boot to the transaxle case.

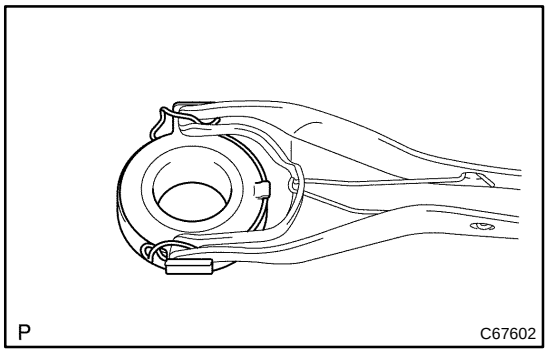

107. INSTALL CLUTCH RELEASE BEARING ASSY

(a) Coat the clutch release bearing assy with the release hub grease, install it to the clutch release fork sub–assy.
Sealant:
Part No. 08887–01806, RELEASE HUB GREASE or equivalent

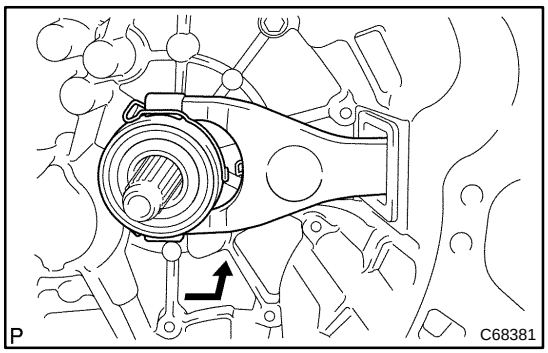

108. INSTALL CLUTCH RELEASE FORK SUB–ASSY

(a) Install the clutch release fork sub–assy to the input shaft.
(b) Apply clutch spline grease to spline of the input shaft.
Sealant:
Part No. 08887–01806, CLUTCH SPLINE GREASE or equivalent

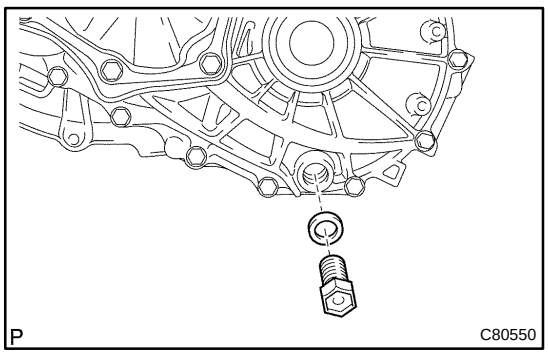

109. INSTALL DRAIN (MTM) PLUG SUB–ASSY

(a) Install a new gasket with the drain (MTM) plug sub–assy.
Torque: 39.2 N·m (400 kgf·cm, 29 ft·lbf)

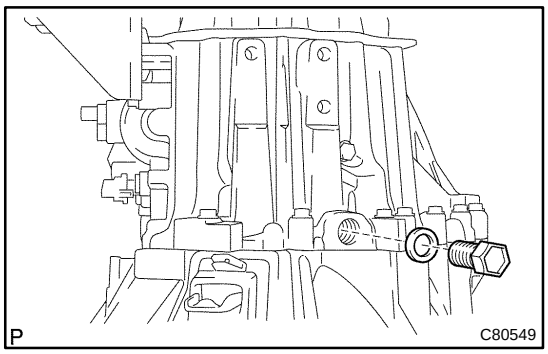

110. INSTALL MANUAL TRANSMISSION FILLER PLUG

(a) Install a new gasket with the manual transmission filler plug.

Torque: 39.2 N·m (400 kgf·cm, 29 ft·lbf)

MANUAL TRANSAXLE OIL

41076–01

ON–VEHICLE INSPECTION

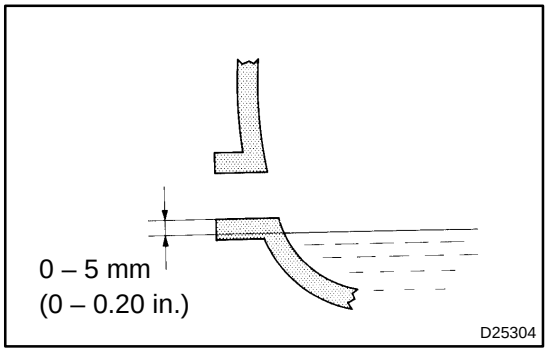

1. INSPECT TRANSAXLE OIL

(a) Stop the vehicle on the level place.

(b) Remove the transmission filler plug and gasket.

(c) Check that the oil surface is within 5 mm (0.20 in.) from the lowest position of the inner surface of the transmission filler plug opening.

NOTICE:

- **Excessively large or small amount of oil may cause troubles.**
- **After replacing oil, drive the vehicle and check the oil level.**

(d) Check for oil leakage when the oil level is low.

(e) Install the transmission filler plug and new gasket.
Torque: 39.2 N·m (400 kgf·cm, 29 ft·lbf)

OUTPUT SHAFT ASSY (C59)

COMPONENTS

4107I–01

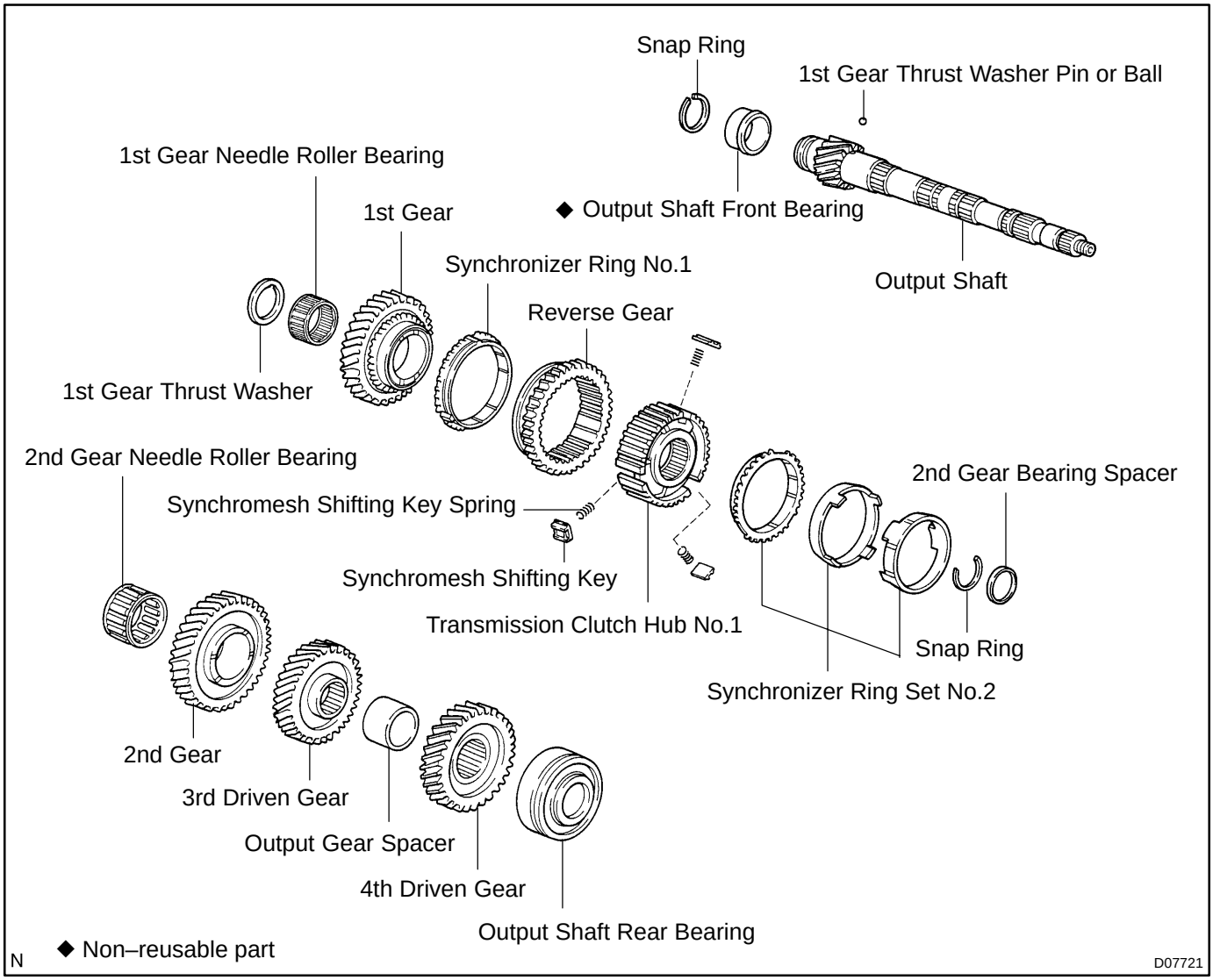

4107J–01

OVERHAUL

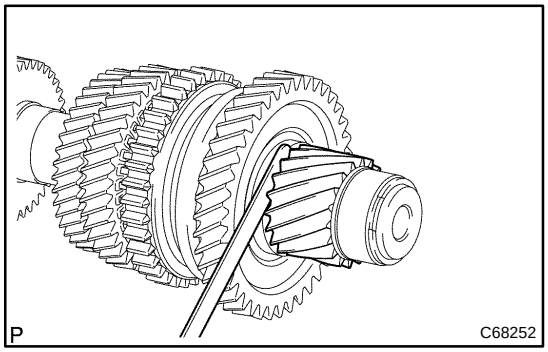

1. INSPECT 1ST GEAR THRUST CLEARANCE

(a) Using a feeler gauge, measure the 1st gear thrust clearance.

Standard clearance:
0.10 – 0.40 mm (0.0039 – 0.0157 in.)

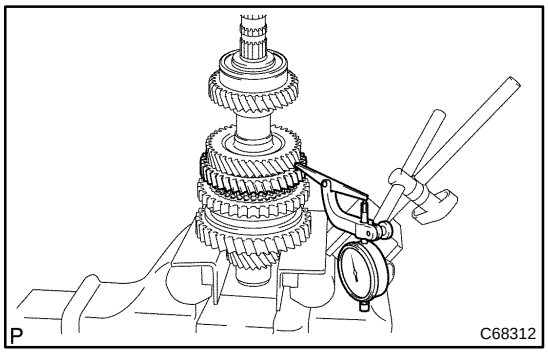

2. INSPECT 2ND GEAR THRUST CLEARANCE

(a) Using a dial indicator, measure the 2nd gear thrust clearance.

Standard clearance:
0.10 – 0.45 mm (0.0039 – 0.0177 in.)

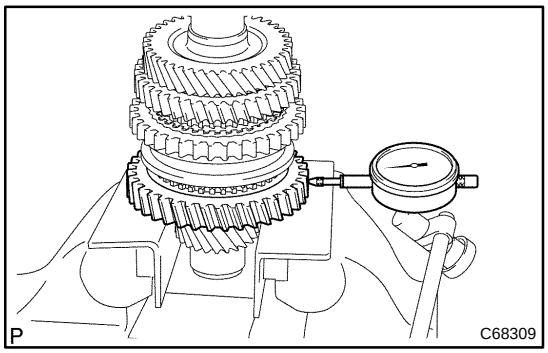

3. INSPECT 1ST GEAR RADIAL CLEARANCE

(a) Using a dial indicator, measure the 1st gear radial clearance.

Standard clearance:

Bearing	Clearance: mm (in.)
KOYO made	0.015 – 0.058 (0.0006 – 0.0023)
NSK made	0.015 – 0.056 (0.0006 – 0.0022)

If the clearance is out of specification, replace the 1st gear needle roller bearing.

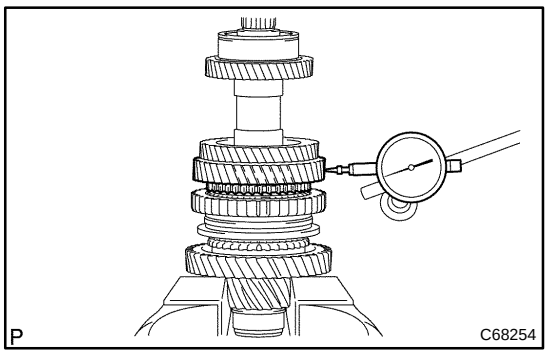

4. INSPECT 2ND GEAR RADIAL CLEARANCE

(a) Using a dial indicator, measure the 2nd gear radial clearance.

Standard clearance:

Bearing	Clearance: mm (in.)
KOYO made	0.015 – 0.058 (0.0006 – 0.0023)
NSK made	0.015 – 0.056 (0.0006 – 0.0022)

If the clearance is out of specification, replace the 2nd gear needle roller bearing.

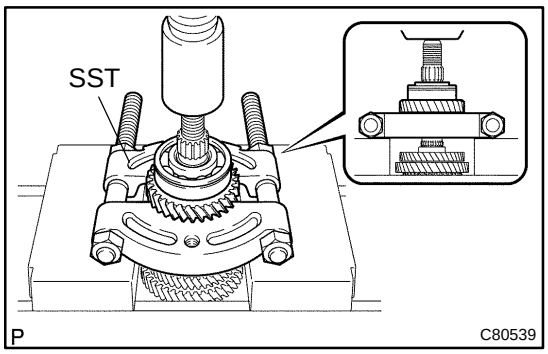

5. REMOVE 4TH DRIVEN GEAR

(a) Using SST and a press, remove the output shaft rear bearing with 4th driven gear from the output shaft.
SST 09950–00020

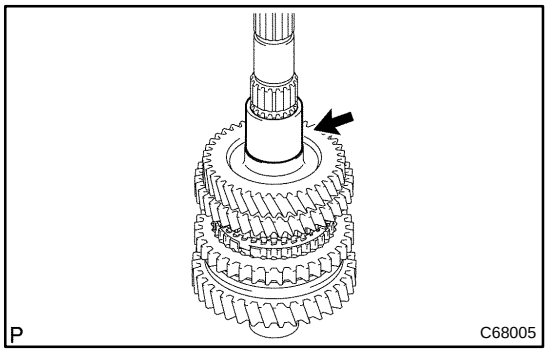

6. REMOVE OUTPUT GEAR SPACER

(a) Remove the output gear spacer from the output shaft.

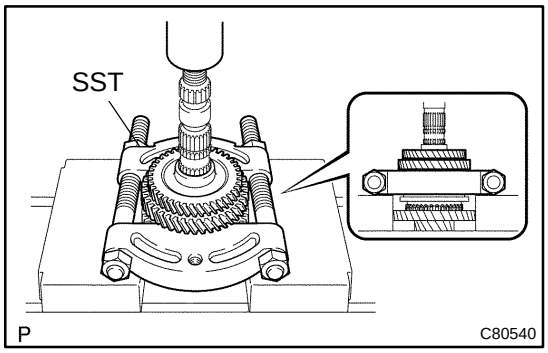

7. REMOVE 2ND GEAR

(a) Using SST and a press, remove the 3rd driven gear with 2nd gear from the output shaft.
SST 09950–00020

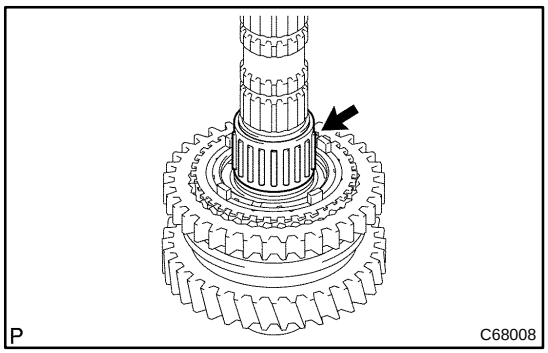

8. REMOVE 2ND GEAR NEEDLE ROLLER BEARING

(a) Remove the 2nd gear needle roller bearing from the output shaft.

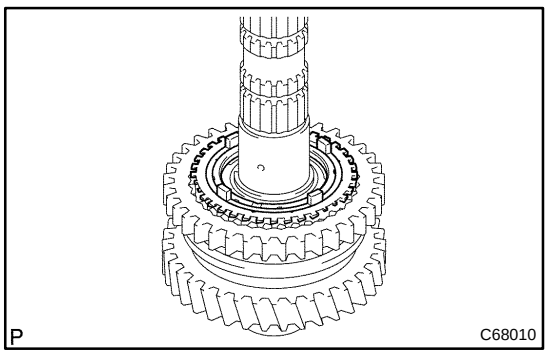

9. REMOVE SYNCHRONIZER RING SET NO.2

(a) Remove the synchronizer ring set No.2 from the output shaft.

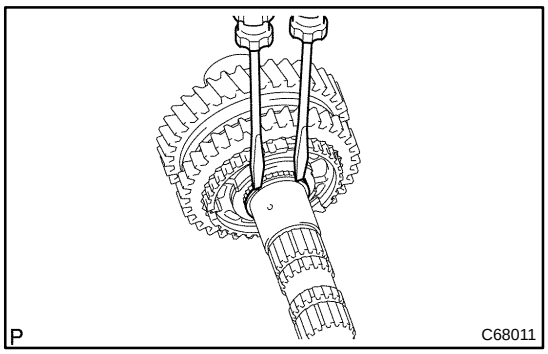

10. REMOVE 1ST GEAR

(a) Using 2 screwdrivers and a hammer, tap out the snap ring.

HINT:

Using a waste to prevent the snap ring from being scattered.

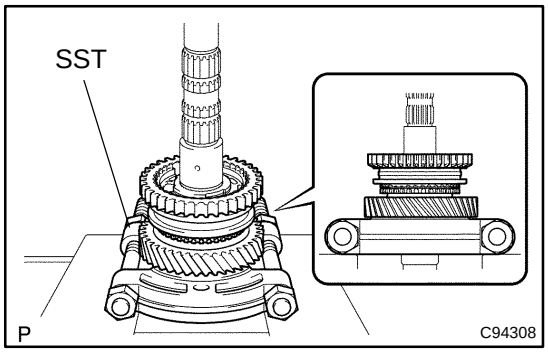

(b) Using SST and a press, remove the transmission clutch hub No.1 with 1st gear from the output shaft.

SST 09950–00020

NOTICE:

- **Do not tighten SST excessively.**
- **Support the input shaft by hand so that it will not be dropped off.**

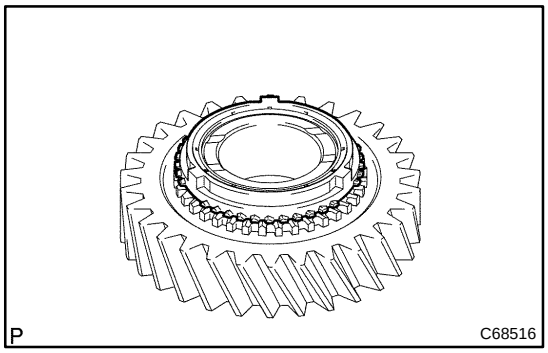

11. REMOVE SYNCHRONIZER RING NO.1

(a) Remove the synchronizer ring No.1 from the 1st gear.

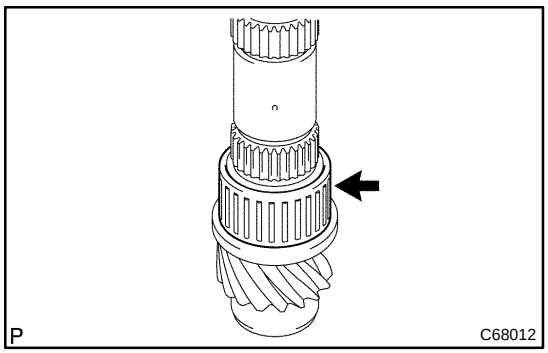

12. REMOVE 1ST GEAR NEEDLE ROLLER BEARING

(a) Remove the 1st gear needle roller bearing from the output shaft.

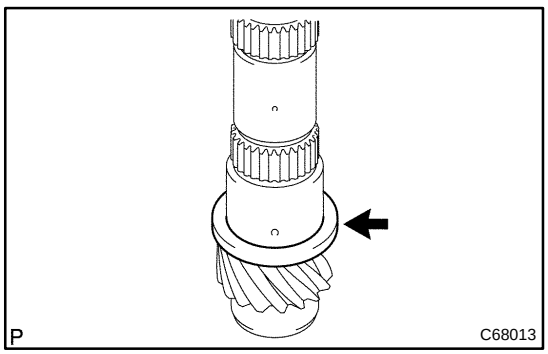

13. REMOVE 1ST GEAR THRUST WASHER

(a) Remove the 1st gear thrust washer from the output shaft.

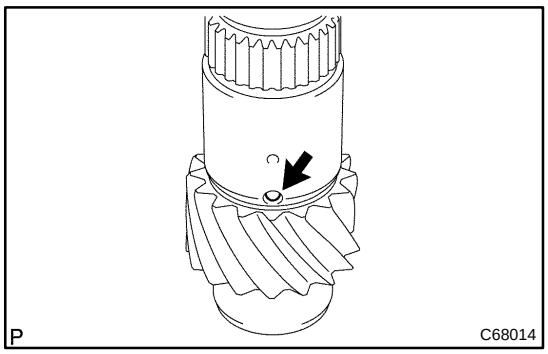

14. REMOVE 1ST GEAR THRUST WASHER PIN OR BALL

(a) Remove the 1st gear thrust washer pin or ball from the output shaft.

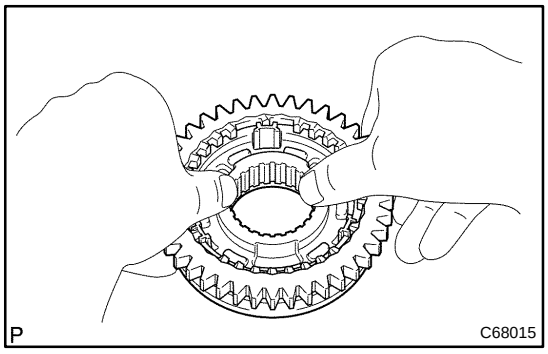

15. REMOVE REVERSE GEAR

(a) Remove the 3 synchromesh shifting keys, 3 synchromesh shifting key springs and reverse gear.

NOTICE:

Using a waste to prevent the synchromesh shifting key and spring from being scattered.

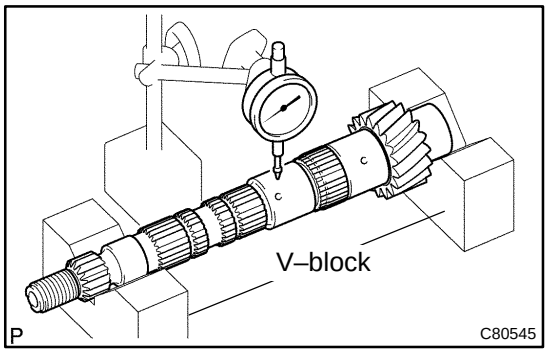

16. INSPECT OUTPUT SHAFT

(a) Using a dial indicator and 2 V–blocks, measure the shaft runout.

Maximum runout: 0.015 mm (0.0006 in.)

If the runout exceeds the maximum, replace the output shaft.

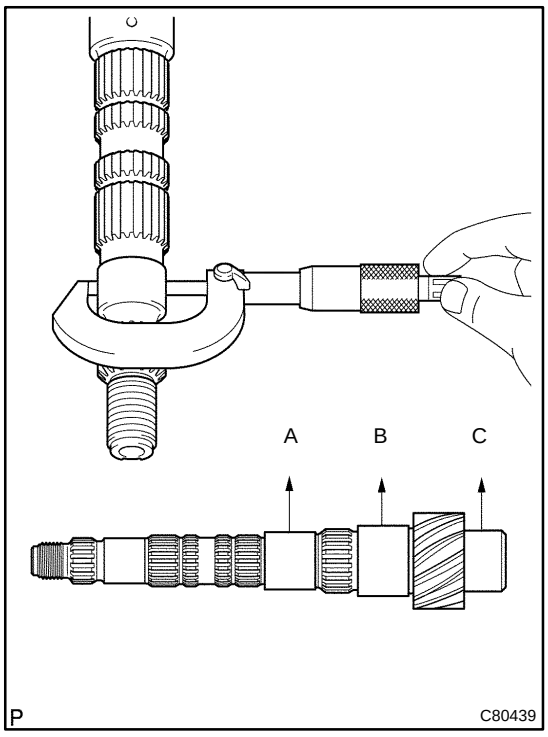

(b) Using a micrometer, measure the outer diameter of the output shaft journal surface.

Outer diameter:

Part A: 31.985 mm (1.2592 in.)

Part B: 37.985 mm (1.4955 in)

Part C: 32.985 mm (1.2986 in)

If the outer diameter is below the minimum, replace the output shaft.

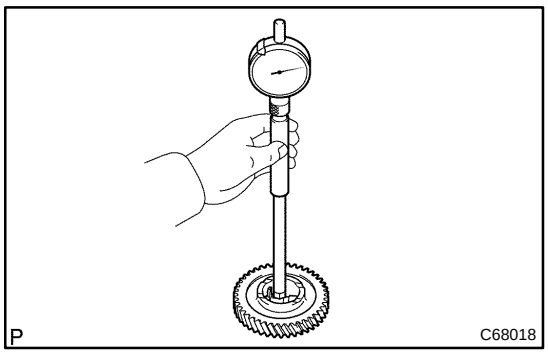

17. INSPECT 2ND GEAR

(a) Using a cylinder gauge, measure the inside diameter of the 2nd gear.

Inside diameter:

New gear: mm (in.)	Maximum inside diameter: mm (in.)
38.015 – 38.031 (1.4967 – 1.4973)	38.031 (1.4973)

If the inside diameter exceeds the maximum, replace the 2nd gear.

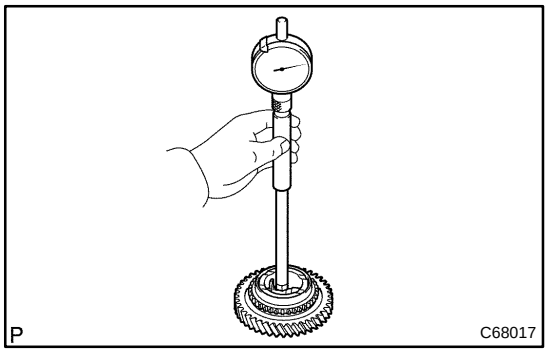

18. INSPECT 1ST GEAR

(a) Using a cylinder gauge, measure the inside diameter of the 1st gear.

Inside diameter:

New gear: mm (in.)	Maximum inside diameter: mm (in.)
44.015 – 44.031 (1.7329 – 1.7335)	44.031 (1.7335)

If the inside diameter exceeds the maximum, replace the 1st gear.

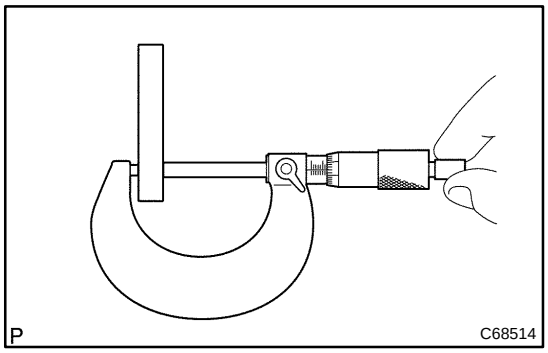

19. INSPECT 1ST GEAR THRUST WASHER

(a) Using a micrometer, measure the thickness of 1st gear thrust washer.

Thickness:

New thrust washer: mm (in.)	Minimum thickness: mm (in.)
5.975 – 6.025 (0.2352 – 0.2372)	5.9755 (0.2352)

If the thickness is below the minimum, replace the 1st gear thrust washer.

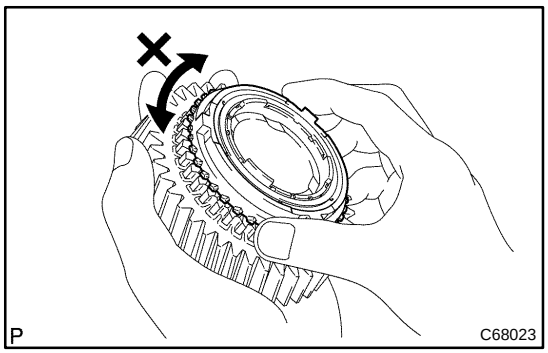

20. INSPECT SYNCHRONIZER RING SET NO.2

(a) Coat the 2nd gear cone with gear oil.
Check the braking effect of the synchronizer ring set No.2.

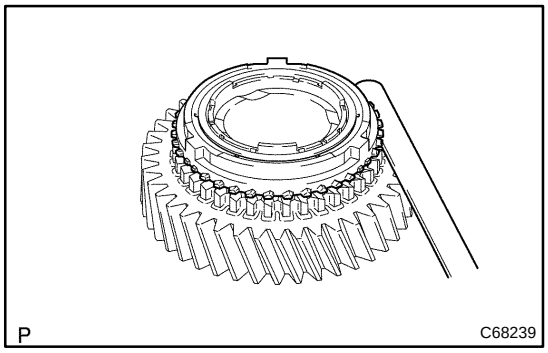

(b) Using a feeler gauge, measure the clearance between the synchronizer ring back and gear spline end.

Standard clearance: 0.7 – 1.3 mm (0.0276 – 0.0512 in.)

If the clearance is out of specification, replace the synchronizer ring set No.2.

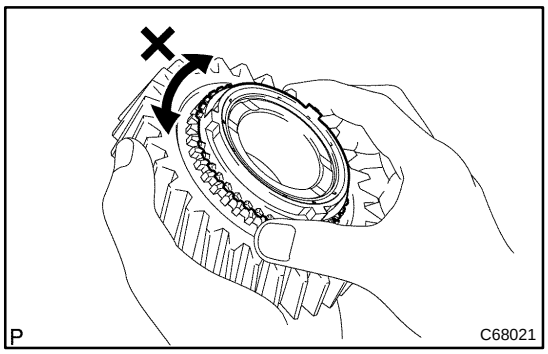

21. INSPECT SYNCHRONIZER RING NO.1

(a) Coat the 1st gear cone with gear oil.
Check the braking effect of the synchronizer ring No.1.

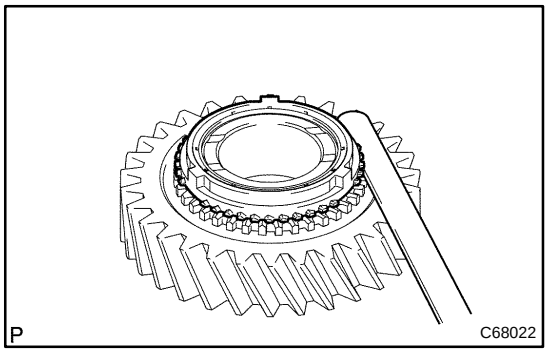

(b) Using a feeler gauge, measure the clearance between the synchronizer ring back and gear spline end.
Standard clearance:
0.75 – 1.65 mm (0.0295 – 0.065 in.)

If the clearance is out of specification, replace the synchronizer ring No.1.

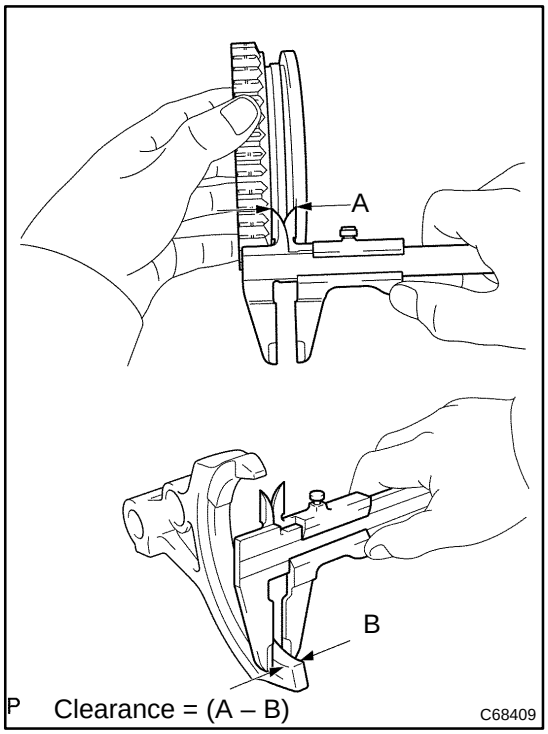

22. INSPECT REVERSE GEAR

(a) Using a vernier caliper gauge, measure the clearance between reverse gear and shift fork.
Standard clearance:
0.15 – 0.35 mm (0.0059 – 0.0138 in.)

If the clearance is out of specification, replace the reverse gear and reverse shift fork.

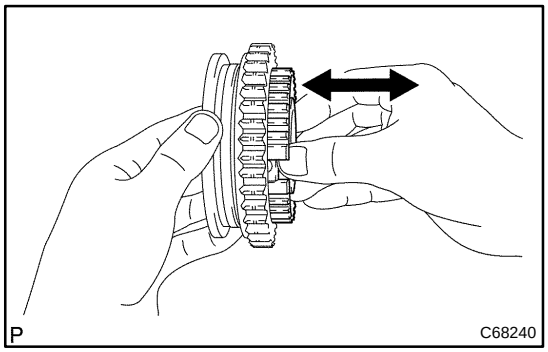

23. INSPECT TRANSMISSION CLUTCH HUB NO.1

(a) Check that the transmission clutch hub No.1 and reverse gear sub–assy slides smoothly.

(b) Check that the spline gear's edges of the reverse gear sub–assy is not worn down.

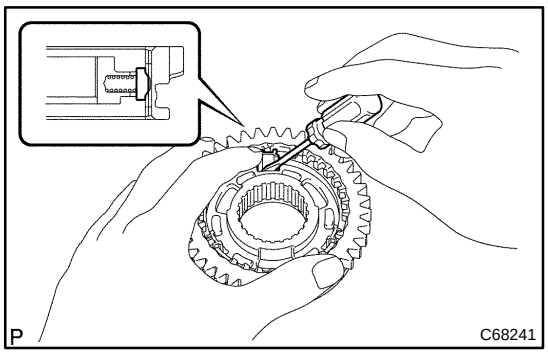

24. INSTALL REVERSE GEAR

(a) Coat the reverse gear with gear oil, install it to the transmission clutch hub No.1.

NOTICE:

Be sure to set the reverse gear and transmission clutch hub No.1 in incorrect orientation.

(b) Using a screwdriver, install the 3 synchromesh shifting key springs and 3 synchromesh shifting keys.

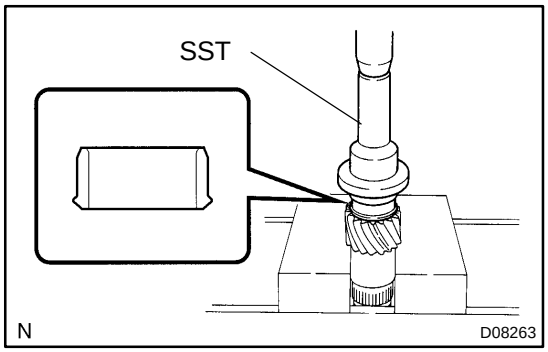

25. INSTALL OUTPUT SHAFT FRONT BEARING

(a) Using SST and a press, install the output shaft front bearing (inner race) to the output shaft.

SST 09223–50010

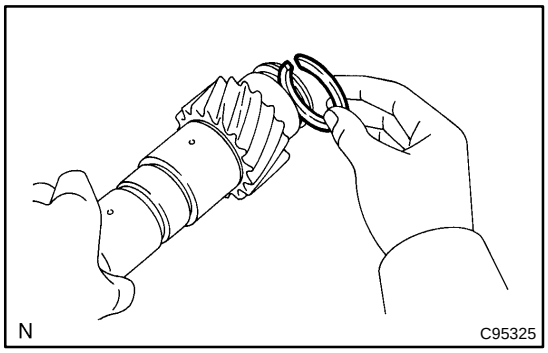

(b) Select a snap ring from the table below that will make the thrust clearance of the output shaft front bearing (inner race) below 0.1 mm (0.0039 in.).

Snap ring thickness:

Part No.	Thickness: mm (in.)	Mark
90520 – 30032	1.85 – 1.90 (0.0728 – 0.0748)	7
90520 – 30033	1.90 – 1.95 (0.0748 – 0.0768)	8
90520 – 30002	1.95 – 2.00 (0.0768 – 0.0787)	1
90520 – 30003	2.00 – 2.05 (0.0787 – 0.0807)	2
90520 – 30004	2.05 – 2.10 (0.0807 – 0.0827)	3
90520 – 30005	2.10 – 2.15 (0.0827 – 0.0846)	4
90520 – 30006	2.15 – 2.20 (0.0846 – 0.0866)	5
90520 – 30007	2.20 – 2.25 (0.0866 – 0.0886)	6

(c) Using a brass bar and a hammer, tap in the snap ring.

NOTICE:

Take care not to damage the journal surface of the output shaft.

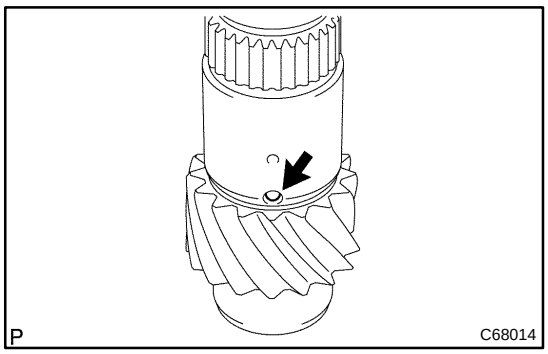

26. INSTALL 1ST GEAR THRUST WASHER PIN OR BALL

(a) Coat the 1st gear thrust washer pin or ball with MP grease, install it to the output shaft.

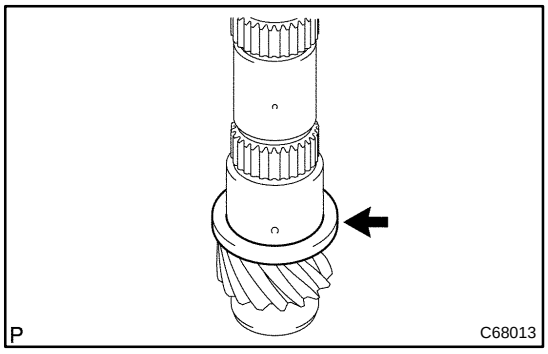

27. INSTALL 1ST GEAR THRUST WASHER

(a) Coat the 1st gear thrust washer with gear oil, install it to the output shaft.

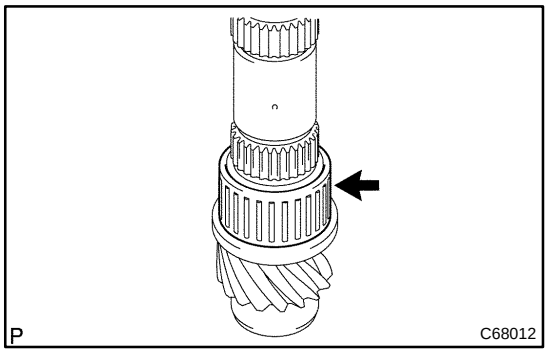

28. INSTALL 1ST GEAR NEEDLE ROLLER BEARING

(a) Coat the 1st gear needle roller bearing with gear oil, install it to the output shaft.

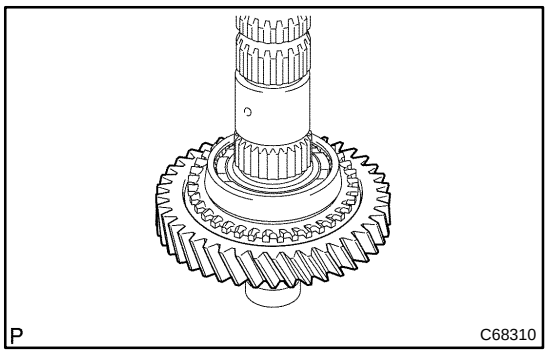

29. INSTALL 1ST GEAR

(a) Coat the 1st gear with gear oil, install it to the output shaft.

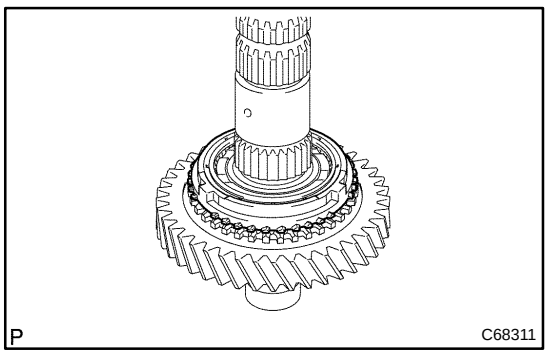

30. INSTALL SYNCHRONIZER RING NO.1

(a) Coat the synchronizer ring No.1 with gear oil, install it to the 1st gear.

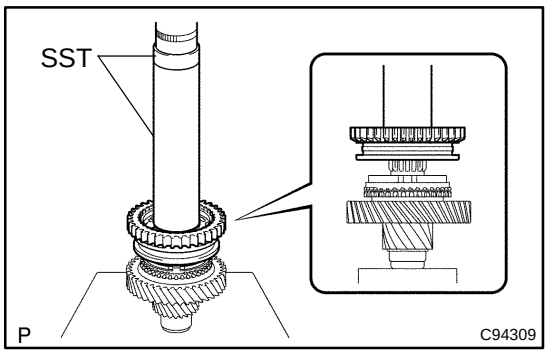

31. INSTALL TRANSMISSION CLUTCH HUB NO.1

(a) Using SST and a press, install the transmission clutch hub No.1 to the output shaft.
SST 09316–60011 (09316–00031)

NOTICE:
The 1st gear can be turned.

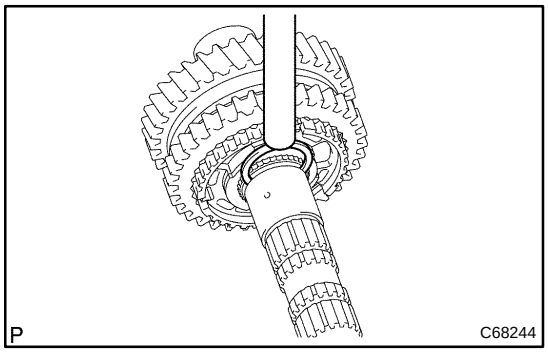

(b) Select a snap ring from the table below that will make the thrust clearance of the transmission clutch hub No.1 below 0.1 mm (0.0039 in.).

Snap ring thickness:

Part No.	Thickness: mm (in.)	Mark
90520 – 29018	2.50 (0.0984)	A
90520 – 29019	2.56 (0.1008)	B
90520 – 29020	2.62 (0.1031)	C
90520 – 29021	2.68 (0.1055)	D
90520 – 29022	2.74 (0.1079)	E
90520 – 29023	2.80 (0.1102)	F

(c) Using a brass bar and a hammer, install the snap ring to the output shaft.

NOTICE:
Take care not to damage the journal surface of the output shaft.

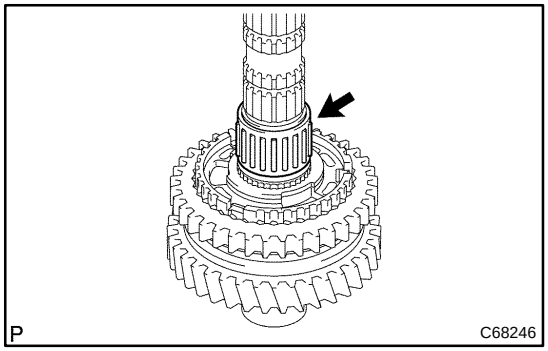

32. INSTALL 2ND GEAR NEEDLE ROLLER BEARING

(a) Coat the 2nd gear needle roller bearing with gear oil, install it to the output shaft.

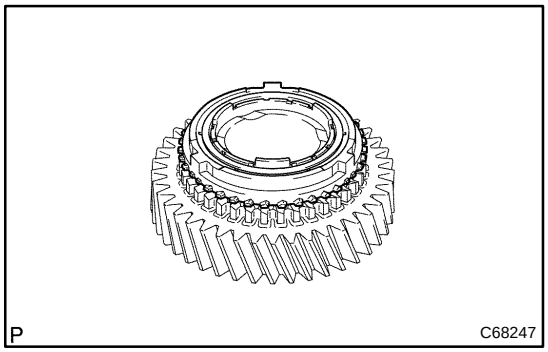

33. INSTALL SYNCHRONIZER RING SET NO.2

(a) Coat the synchronizer ring set No.2 with gear oil, install it to the 2nd gear.

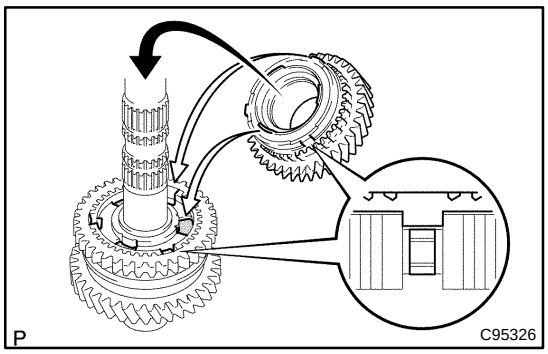

34. INSTALL 2ND GEAR

(a) Coat the 2nd gear with gear oil, install it to the output shaft.

NOTICE:

Fit the synchronizer inner ring claws into the slots in the transmission clutch hub No.1.

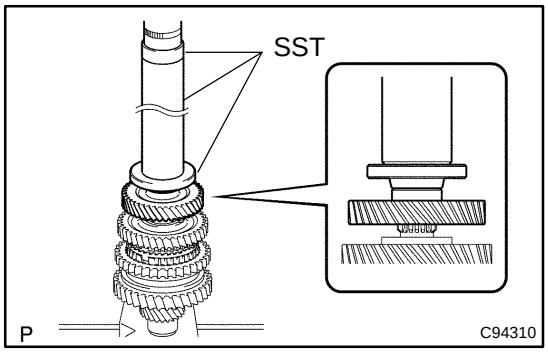

35. INSTALL 3RD DRIVEN GEAR

(a) Using SST and a press, install the 3rd driven gear to the output shaft.

SST 09309–36100 (09309–03610), 09608–00071, 09950–60010 (09951–00450)

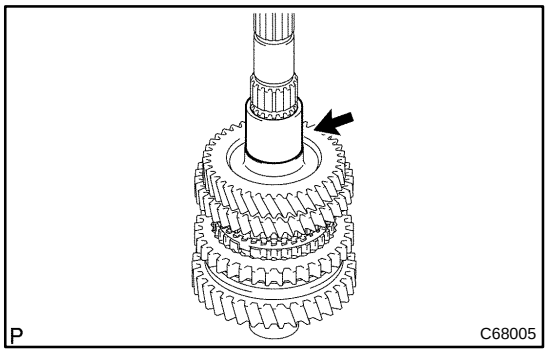

36. INSTALL OUTPUT GEAR SPACER

(a) Install the output gear spacer to the output shaft.

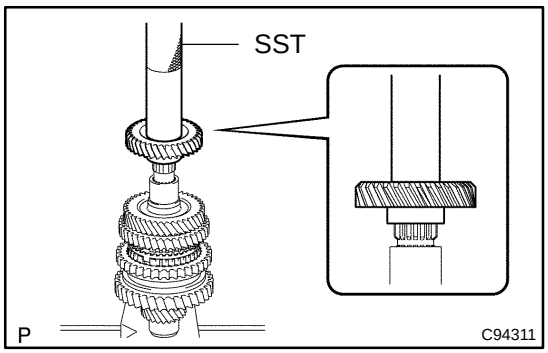

37. INSTALL 4TH DRIVEN GEAR

(a) Using SST and a press, install 4th driven gear to the output shaft.

SST 09612–22011

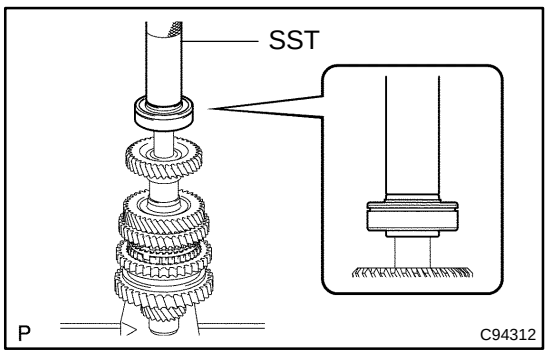

38. INSTALL OUTPUT SHAFT REAR BEARING

(a) Using SST and a press, install output shaft rear bearing to the output shaft.

SST 09612–22011

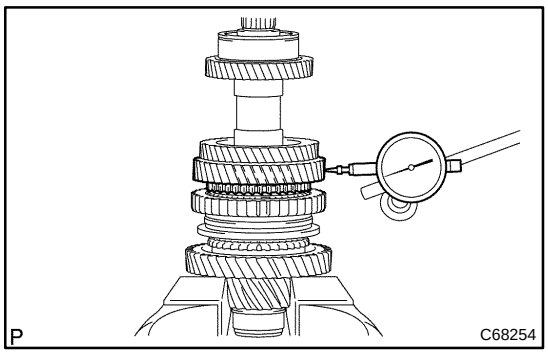

39. INSPECT 2ND GEAR RADIAL CLEARANCE

(a) Using a dial indicator, measure the 2nd gear radial clearance.

Standard clearance:

Bearing	Clearance: mm (in.)
KOYO made	0.015 – 0.058 (0.0006 – 0.0023)
NSK made	0.015 – 0.056 (0.0006 – 0.0022)

If the clearance is out of specification, replace the 2nd gear needle roller bearing.

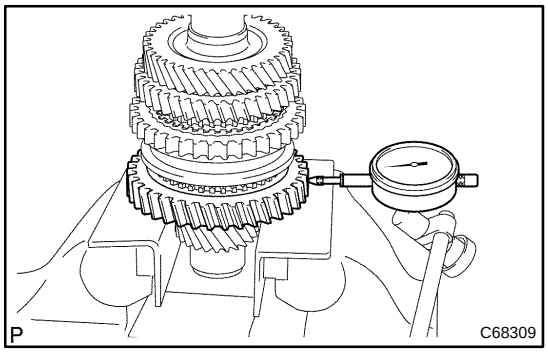

40. INSPECT 1ST GEAR RADIAL CLEARANCE

(a) Using a dial indicator, measure the 1st gear radial clearance.

Standard clearance:

Bearing	Clearance: mm (in.)
KOYO made	0.015 – 0.058 (0.0006 – 0.0023)
NSK made	0.015 – 0.056 (0.0006 – 0.0022)

If the clearance is out of specification, replace the 1st gear needle roller bearing.

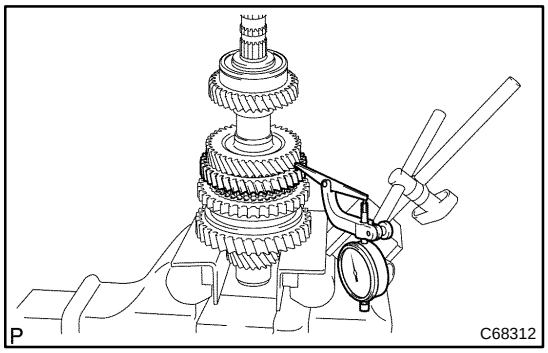

41. INSPECT 2ND GEAR THRUST CLEARANCE

(a) Using a dial indicator, measure the 2nd gear thrust clearance.

Standard clearance:
0.10 – 0.45 mm (0.0039 – 0.0177 in.)

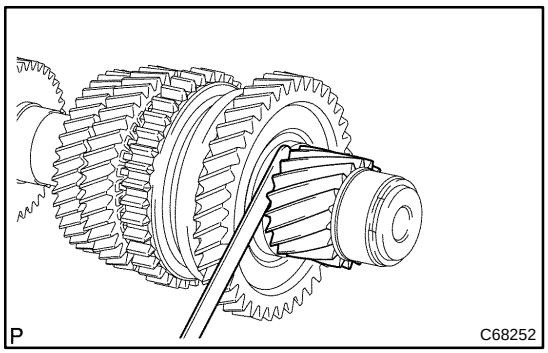

42. INSPECT 1ST GEAR THRUST CLEARANCE

(a) Using a feeler gauge, measure the 1st gear thrust clearance.

Standard clearance:
0.10 – 0.40 mm (0.0039 – 0.0157 in.)

4107D–02

REPLACEMENT

HINT:

COMPONENTS: See page 41–15

1. **PLACE FRONT WHEELS FACING STRAIGHT AHEAD**
2. **REMOVE FRONT WHEELS**
3. **REMOVE ENGINE UNDER COVER LH**
4. **REMOVE ENGINE UNDER COVER RH**
5. **REMOVE EXHAUST PIPE (See page 15–2)**
6. **DRAIN TRANSAXLE OIL**
7. **REMOVE HOOD SUB–ASSY**
8. **REMOVE CYLINDER HEAD COVER NO.2**
9. **REMOVE AIR CLEANER ASSY**
10. **REMOVE BATTERY CLAMP SUB–ASSY**
11. **REMOVE BATTERY**
12. **REMOVE BATTERY TRAY**

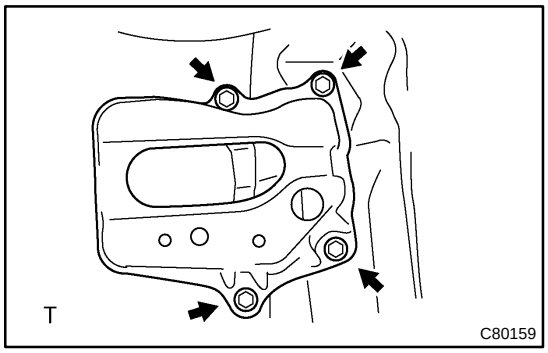

13. **REMOVE BATTERY CARRIER**

(a) Remove the 4 bolts and battery carrier.

14. **REMOVE CRUISE CONTROL ACTUATOR ASSY (W/ CRUISE CONTROL) (See page 82–4)**

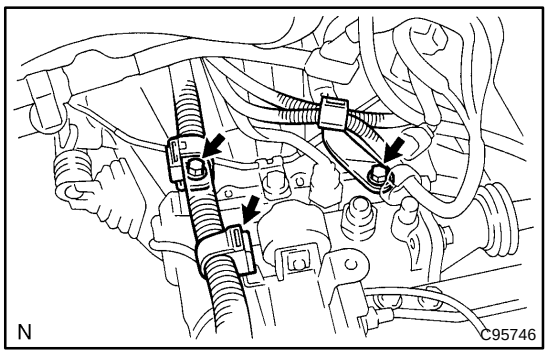

15. **DISCONNECT WIRE HARNESS**

(a) Disconnect the wire harness clamp.

(b) Remove the 2 bolts and disconnect the 2 wire harness brackets.

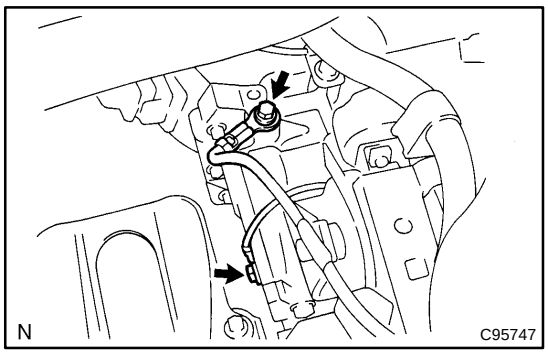

(c) Remove the 2 bolts and 2 ground cables.

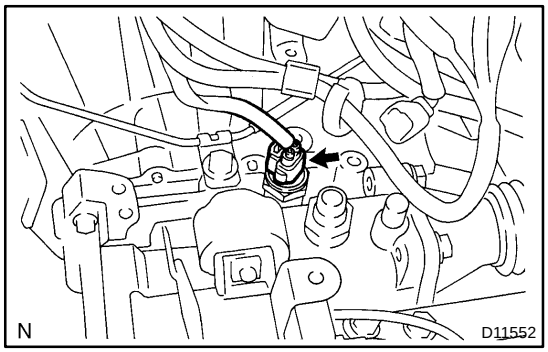

16. DISCONNECT CONNECTOR

(a) Disconnect the back–up lamp switch connector.

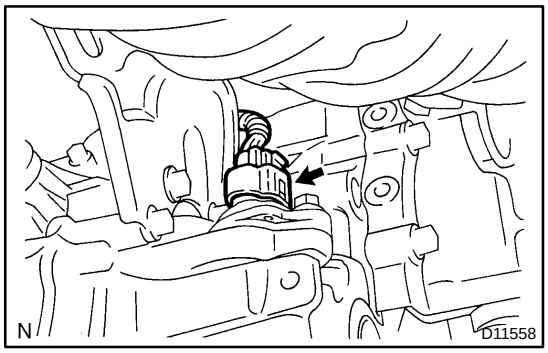

(b) w/o ABS:
Disconnect the speed sensor connector.

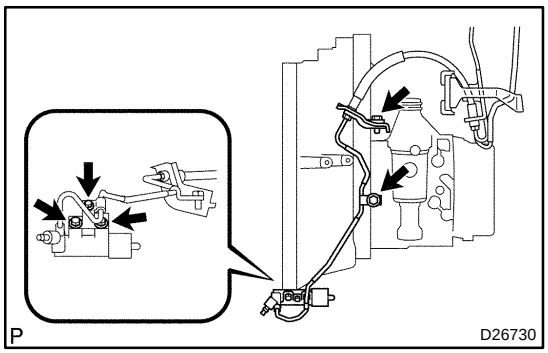

17. SEPARATE CLUTCH RELEASE CYLINDER ASSY

(a) Remove the 5 bolts, separate the release cylinder assy with clutch piping from the transaxle.

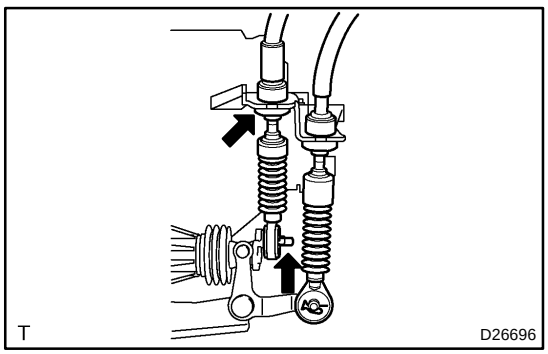

18. SEPARATE FLOOR SHIFT CABLE TRANSMISSION CONTROL SHIFT

(a) Remove the clip, washer and disconnect the shift cable from the transaxle.

(b) Remove the clip and disconnect the shift cable from the bracket.

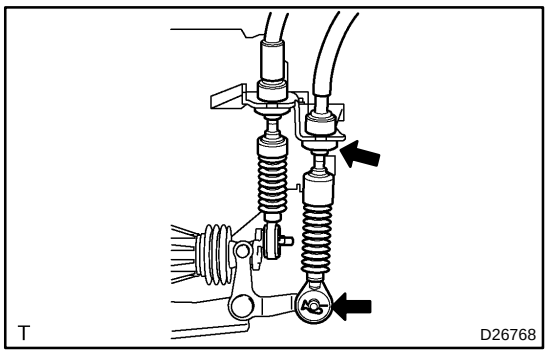

19. SEPARATE FLOOR SHIFT CABLE TRANSMISSION CONTROL SELECT

(a) Remove the clip, washer and disconnect the select cable from the transaxle.

(b) Remove the clip and disconnect the select cable from the bracket.

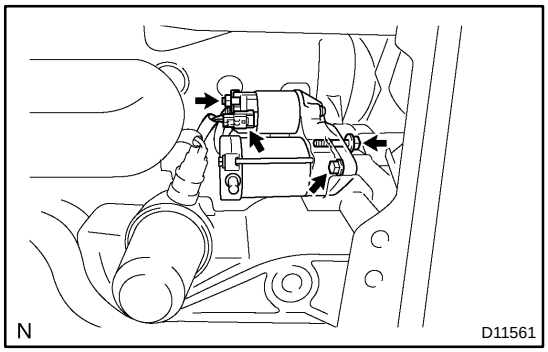

20. REMOVE STARTER ASSY

(a) Remove the nut and disconnect the starter wire.

(b) Disconnect the connector.

(c) Remove the 2 bolts and starter assy.

21. SEPARATE STEERING INTERMEDIATE SHAFT (See page 51–18)

22. REMOVE FRONT DRIVE SHAFT ASSY LH (See page 30–6)

SST 09520–01010, 09520–24010 (09520–32040)

23. REMOVE FRONT DRIVE SHAFT ASSY RH

HINT:

Remove the RH side by the same procedures as LH side.

SST 09520–01010, 09520–24010 (09520–32040)

24. SEPARATE RETURN TUBE SUB–ASSY (See page 51–18)

SST 09023–12700

25. SEPARATE PRESSURE FEED TUBE ASSY (See page 51–18)

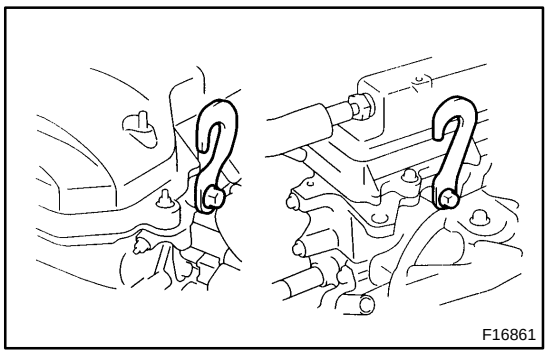

26. SUSPEND ENGINE ASSY

(a) Remove the 2 PCV hoses.

(b) Install the 2 hangers in the correct direction.

Parts No.:
Engine hanger: 12281–22021
No.1 engine hanger: 12281–15040
Bolt: 91512–B1016
Torque: 38 N·m (387 kgf·cm, 28 ft·lbf)

(c) Attach the engine chain hoist to the hangers.

CAUTION:
Do not attempt to hang the engine by hooking the chain to any other part.

27. REMOVE FRONT SUSPENSION CROSSMEMBER SUB–ASSY (See page 26–13)

28. SUPPORT MANUAL TRANSAXLE ASSY

(a) Support the transaxle with a transmission jack.

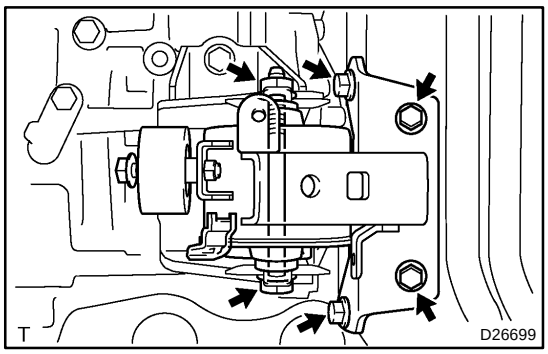

29. REMOVE TRANSVERSE ENGINE ENGINE MOUNTING INSULATOR

(a) Remove the 5 bolts, nut and engine mounting insulator LH from the body.

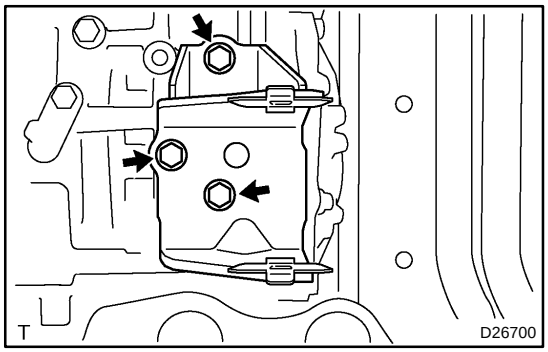

30. REMOVE TRANSVERSE ENGINE ENGINE MOUNTING BRACKET

(a) Remove the 3 bolts and engine mounting bracket LH from the transaxle.

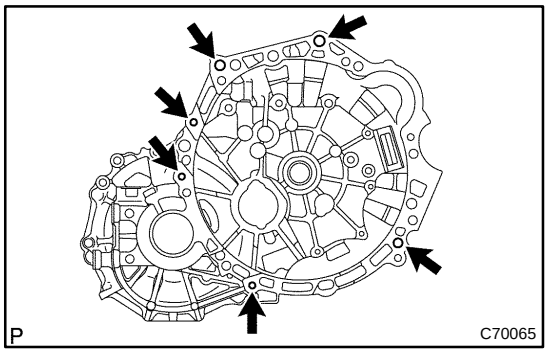

31. REMOVE MANUAL TRANSAXLE ASSY

(a) Remove the 6 bolts and transaxle from the engine.

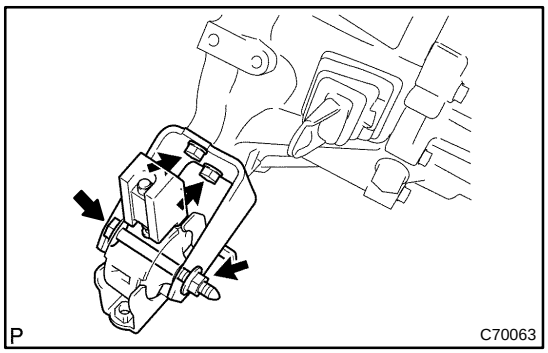

32. REMOVE TRANSVERSE ENGINE ENGINE MOUNTING BRACKET

(a) Remove the bolt, nut and engine mounting insulator FR from the engine mounting bracket FR.

(b) Remove the 2 bolts and engine mounting bracket FR from the transaxle.

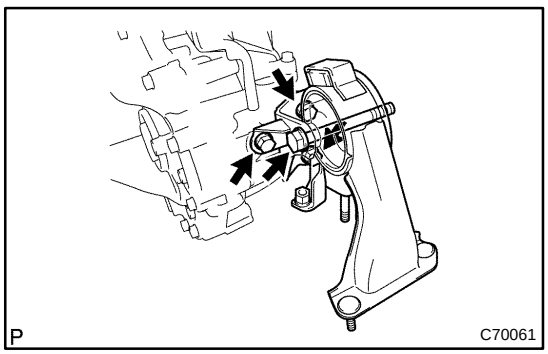

33. REMOVE TRANSVERSE ENGINE ENGINE MOUNTING BRACKET

(a) Remove the bolt and engine mounting insulator RR from the engine mounting bracket RR.

(b) Remove the 3 bolts and engine mounting bracket RR from the transaxle.

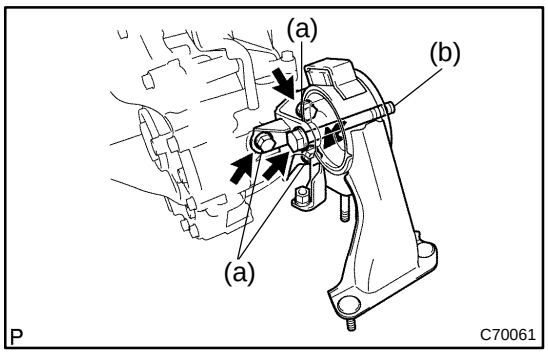

34. INSTALL TRANSVERSE ENGINE ENGINE MOUNTING BRACKET

(a) Install the engine mounting bracket RR and 3 bolts to the transaxle.
Torque: 64 N·m (653 kgf·cm, 47 ft·lbf)

(b) Install the engine mounting insulator RR and bolt to the engine mounting bracket RR.
Torque: 87 N·m (888 kgf·cm, 64 ft·lbf)

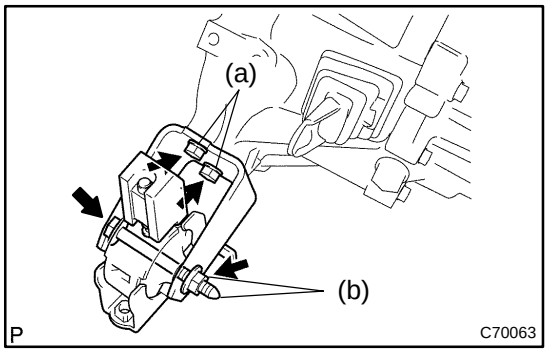

35. INSTALL TRANSVERSE ENGINE ENGINE MOUNTING BRACKET

(a) Install the engine mounting bracket FR and 2 bolts to the transaxle.
Torque: 64 N·m (653 kgf·cm, 47 ft·lbf)

(b) Install the engine mounting insulator FR, bolt and nut to the engine mounting bracket FR.
Torque: 52 N·m (530 kgf·cm, 38 ft·lbf)

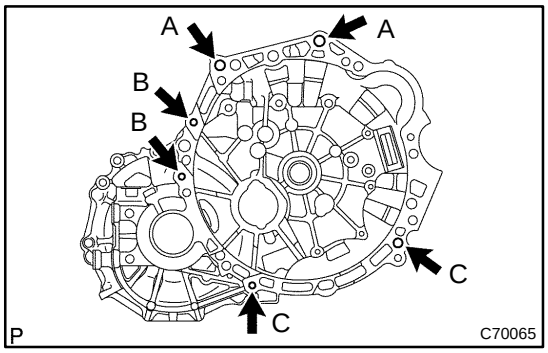

36. INSTALL MANUAL TRANSAXLE ASSY

(a) Align the input shaft with the clutch disc and install the transaxle to the engine.

(b) Install the 6 bolts.
Torque:
Bolt A: 64 N·m (650 kgf·cm, 47 ft·lbf)
Bolt B: 47 N·m (480 kgf·cm, 35 ft·lbf)
Bolt C: 23 N·m (230 kgf·cm, 17 ft·lbf)

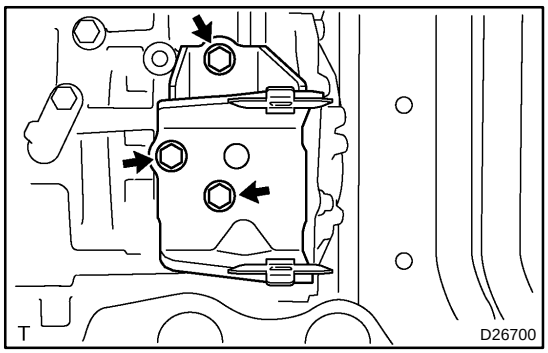

37. INSTALL TRANSVERSE ENGINE ENGINE MOUNTING BRACKET

(a) Install the engine mounting bracket LH to the transaxle with the 3 bolts.
Torque: 52 N·m (530 kgf·cm, 38 ft·lbf)

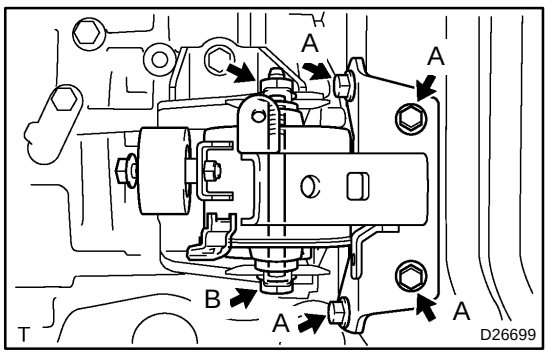

38. INSTALL TRANSVERSE ENGINE ENGINE MOUNTING INSULATOR

(a) Install the engine mounting insulator LH with the 5 bolts and nut.
Torque:
Bolt A: 52 N·m (530 kgf·cm, 38 ft·lbf)
Bolt B: 80 N·m (816 kgf·cm, 59 ft·lbf)

39. INSTALL FRONT SUSPENSION CROSSMEMBER SUB–ASSY (See page 26–13)
SST 09670–00010

40. CONNECT STEERING INTERMEDIATE SHAFT (See page 51–18)

41. INSTALL COLUMN HOLE COVER SILENCER SHEET (See page 51–18)

42. CONNECT RETURN TUBE SUB–ASSY (See page 51–18)
SST 09023–12700

43. CONNECT PRESSURE FEED TUBE ASSY (See page 51–18)
SST 09023–12700

44. INSTALL FRONT DRIVE SHAFT ASSY LH (See page 30–6)

45. INSTALL FRONT DRIVE SHAFT ASSY RH

HINT:
Install the RH side by the same procedures as LH side.

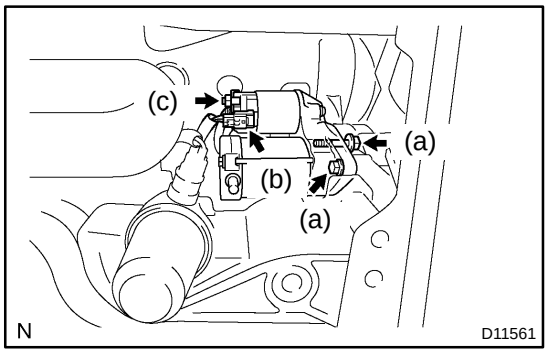

46. INSTALL STARTER ASSY
(a) Install the starter assy and 2 bolts to the transaxle.
Torque: 37 N·m (378 kgf·cm, 27 ft·lbf)
(b) Connect the starter connector.
(c) Install the wire and nut to starter assy.
Torque: 9.8 N·m (100 kgf·cm, 87 in.·lbf)

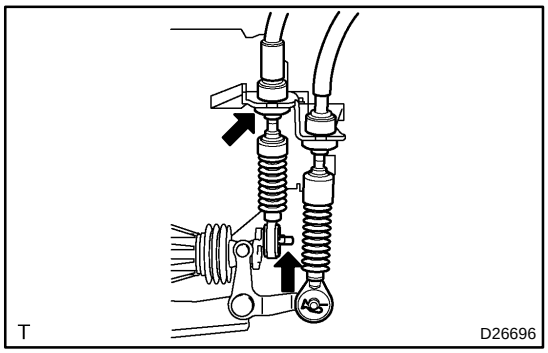

47. CONNECT FLOOR SHIFT CABLE TRANSMISSION CONTROL SHIFT
(a) Connect the shift cable end, and install the washer and clip.

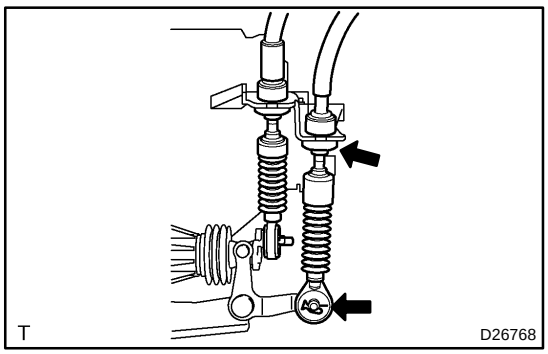

48. CONNECT FLOOR SHIFT CABLE TRANSMISSION CONTROL SELECT
(a) Connect the select cable end, and install the washer and clip.

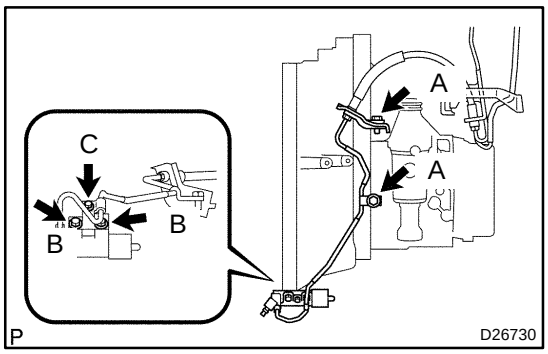

49. CONNECT CLUTCH RELEASE CYLINDER ASSY

(a) Install the release cylinder with the 5 bolts.

Torque:
Bolt A: 25 N·m (250 kgf·cm, 19 ft·lbf)
Bolt B: 12 N·m (120 kgf·cm, 9 ft·lbf)
Bolt C: 5.0 N·m (51 kgf·cm, 44 in.·lbf)

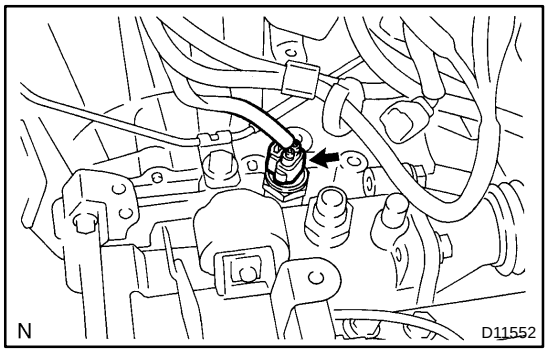

50. CONNECT CONNECTOR

(a) Connect the back–up lamp switch connector.

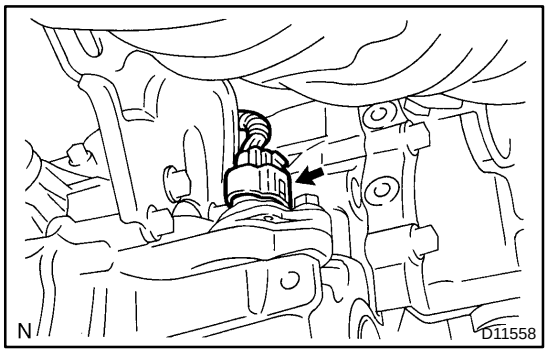

(b) w/o ABS:
Connect the speed sensor connector.

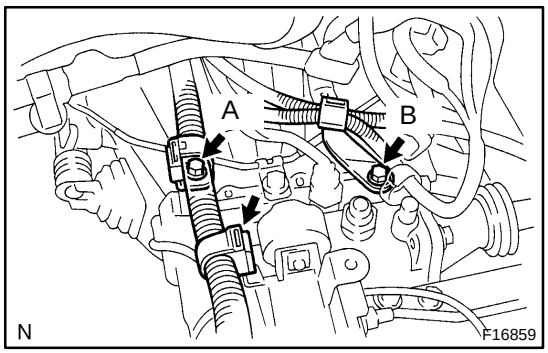

51. CONNECT WIRE HARNESS

(a) Install the 2 wire harness clamps to the transaxle with the 2 bolts.

Torque:
Bolt A: 25.5 N·m (260 kgf·cm, 19 ft·lbf)
Bolt B: 12.8 N·m (131 kgf·cm, 9 ft·lbf)

(1) Connect the wire harness clamp.

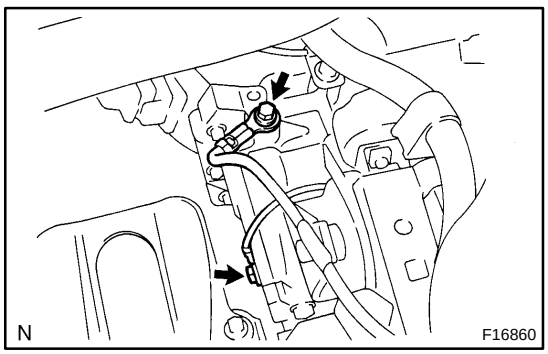

(b) Install the 2 bolts and 2 ground cables.

Torque: 13 N·m (133 kgf·cm, 10 ft·lbf)

52. INSTALL CRUISE CONTROL ACTUATOR ASSY (W/ CRUISE CONTROL) (See page 82–4)

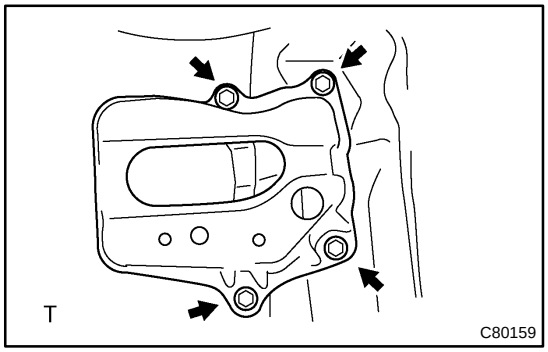

53. INSTALL BATTERY CARRIER

(a) Install the battery carrier and 4 bolts.
Torque: 13 N·m (133 kgf·cm, 10 ft·lbf)

54. INSTALL BATTERY TRAY
55. INSTALL BATTERY
56. INSTALL BATTERY CLAMP SUB–ASSY
Torque:
Bolt: 5.0 N·m (51 kgf·cm, 44 in.·lbf)
Nut: 3.5 N·m (36 kgf·cm, 31 in.·lbf)
57. INSTALL AIR CLEANER ASSY
Torque: 7.0 N·m (71 kgf·cm, 62 in.·lbf)
58. INSTALL CYLINDER HEAD COVER NO.2
Torque: 7.0 N·m (71 kgf·cm, 62 in.·lbf)
59. INSTALL HOOD SUB–ASSY
Torque: 13 N·m (133 kgf·cm, 10 ft·lbf)
60. INSPECT HOOD SUB–ASSY
61. ADJUST HOOD SUB–ASSY (See page 75–1)
62. ADD TRANSAXLE OIL (See page 41–2)
63. INSPECT TRANSAXLE OIL (See page 41–2)
64. BLEED POWER STEERING FLUID (See page 51–3)
65. INSTALL FRONT WHEELS
Torque: 103 N·m (1,050 kgf·cm, 76 ft·lbf)
66. PLACE FRONT WHEELS FACING STRAIGHT AHEAD
67. INSTALL EXHAUST PIPE (See page 15–2)
68. INSTALL ENGINE UNDER COVER LH
69. INSTALL ENGINE UNDER COVER RH
70. INSPECT FRONT WHEEL ALIGNMENT (See page 26–5)
71. CHECK ABS SPEED SENSOR SIGNAL (See page 05–297)

SHIFT & SELECT LEVER SHAFT ASSY (C59)

4107M–01

COMPONENTS

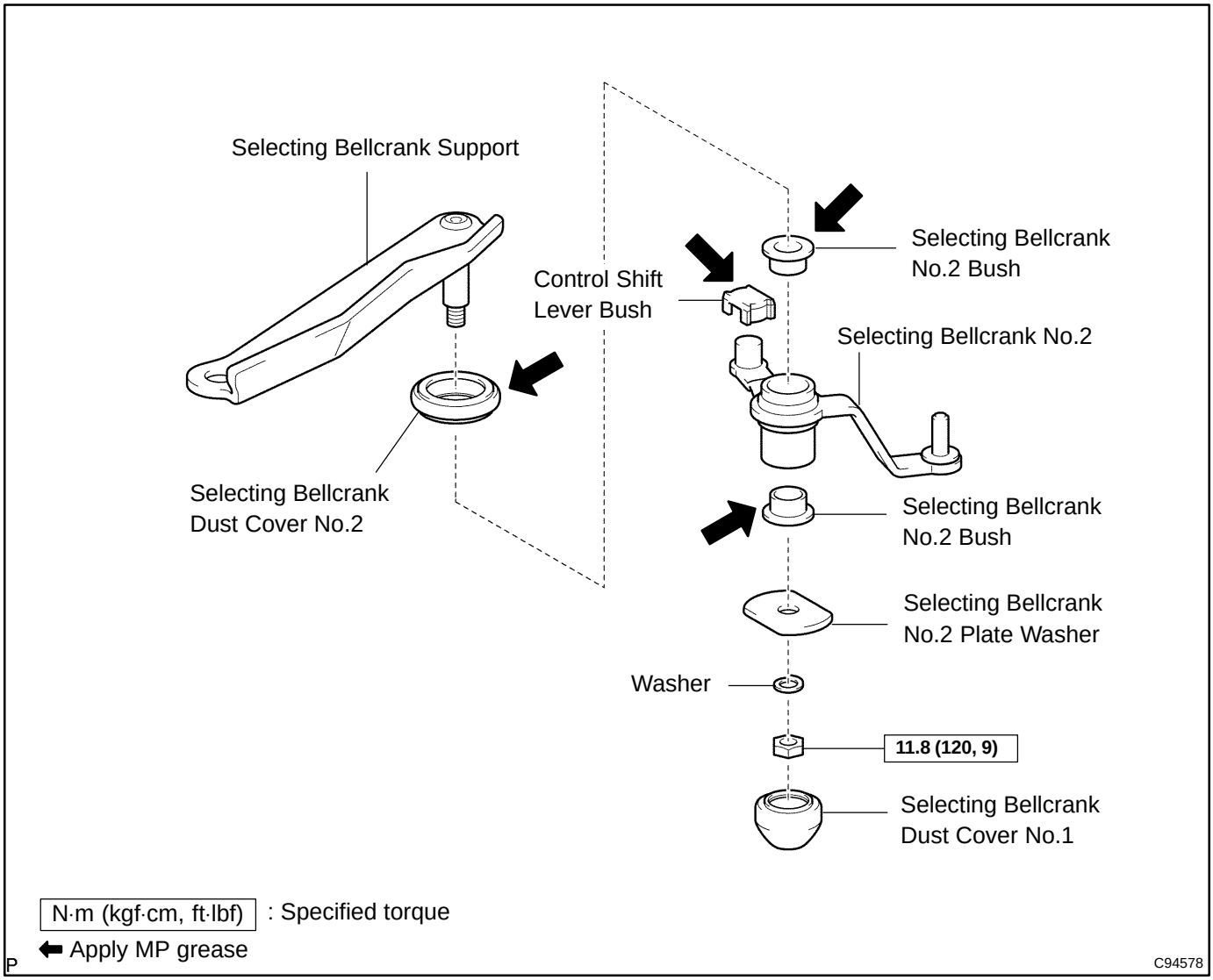

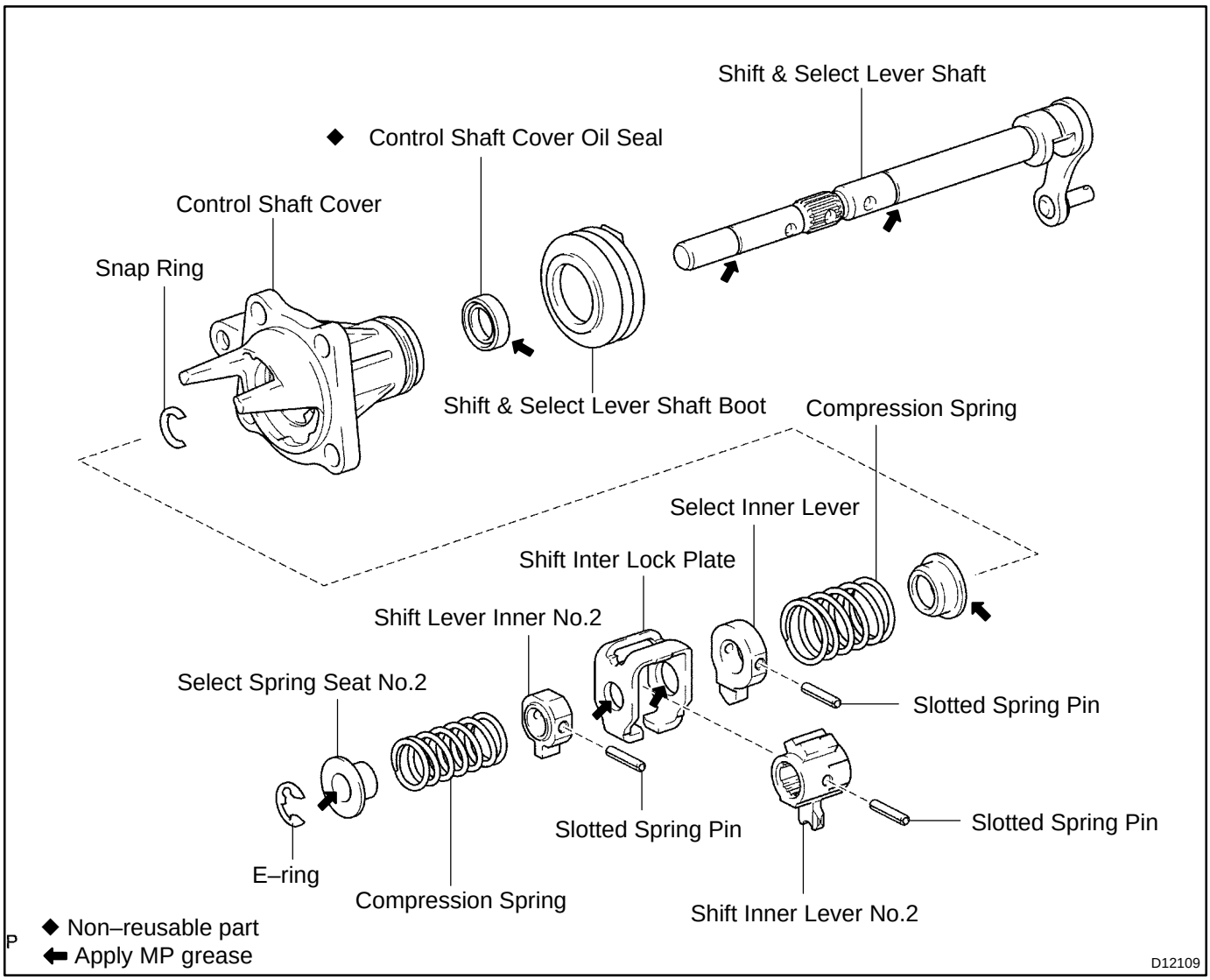
Shift & Select Lever Shaft
◆ Control Shaft Cover Oil Seal
Control Shaft Cover
Snap Ring
Shift & Select Lever Shaft Boot
Compression Spring
Select Inner Lever
Shift Inter Lock Plate
Shift Lever Inner No.2
Select Spring Seat No.2
Slotted Spring Pin
Slotted Spring Pin
Slotted Spring Pin
E–ring
Compression Spring
Shift Inner Lever No.2
◆ Non–reusable part
Apply MP grease
P
D12109

OVERHAUL

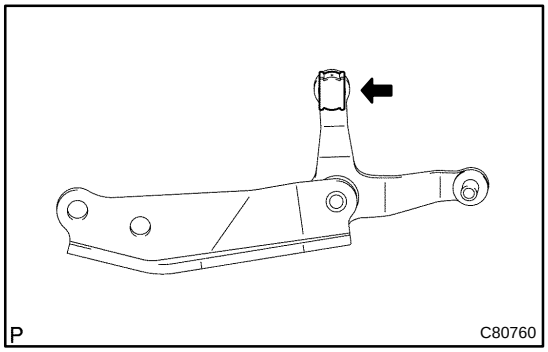

1. REMOVE CONTROL SHIFT LEVER BUSH

(a) Remove the control shift lever bush from the selecting bellcrank assy.

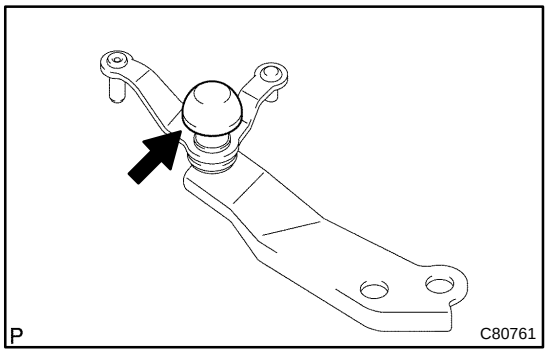

2. REMOVE SELECTING BELLCRANK DUST COVER NO.1

(a) Remove the selecting bellcrank dust cover No.1 from the selecting bellcrank assy.

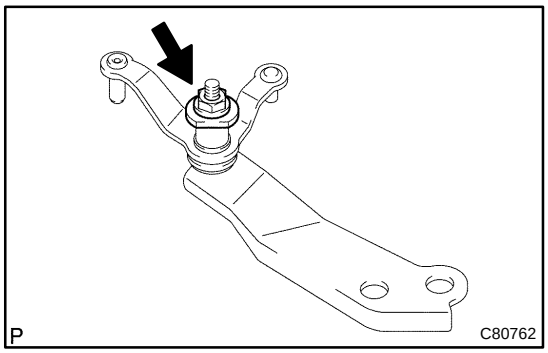

3. REMOVE SELECTING BELL CRANK NO.2

(a) Remove the nut, spring washer and selecting bellcrank No.2 plate washer.

(b) Remove the selecting bellcrank No.2 from the selecting bellcrank support.

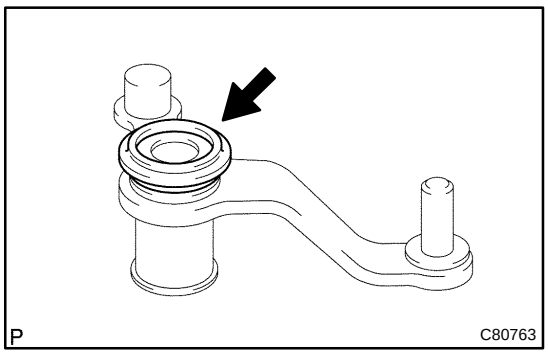

4. REMOVE SELECTING BELLCRANK DUST COVER NO.2

(a) Remove the selecting bellcrank dust cover No.2 from the selecting bellcrank No.2.

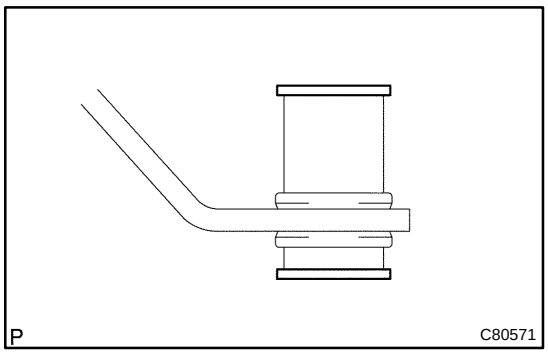

5. REMOVE SELECTING BELLCRANK NO.2 BUSH

(a) Remove the 2 selecting bellcrank No.2 bushes from the selecting bellcrank No.2.

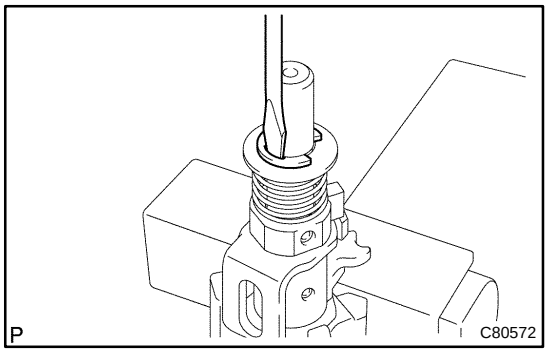

6. REMOVE SELECT SPRING SEAT NO.2

(a) Using a screwdriver, remove the E–ring, select spring seat No.2 and select return spring No.2 from the shift & select lever shaft.

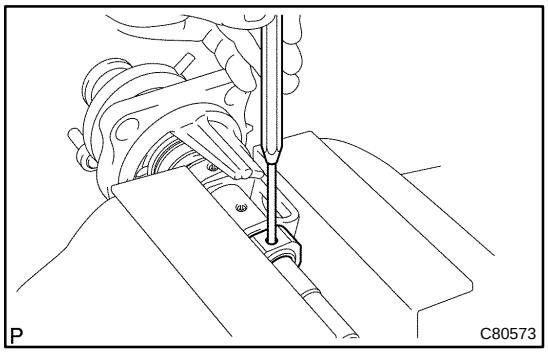

7. REMOVE SHIFT LEVER INNER NO.2

(a) Using a pin punch (ϕ 5 mm) and a hammer, remove the slotted pin and shift lever inner No.2 from the shift & select lever shaft.

HINT:

Make sure the orientation of the shift lever inner No.2.

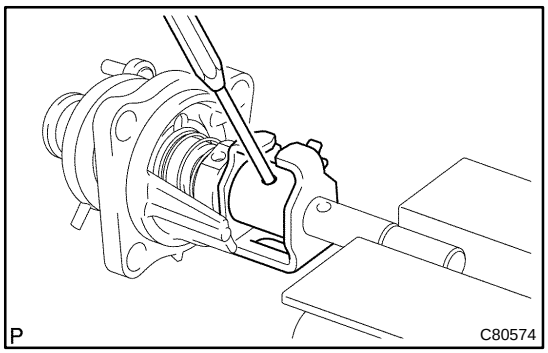

8. REMOVE SHIFT LEVER INNER NO.1

(a) Using a pin punch (ϕ 5 mm) and a hammer, remove the slotted pin, shift lever inner No.1 and shift inter lock plate from the shift & select lever shaft.

HINT:

Make sure the orientation of the shift lever inner No.1.

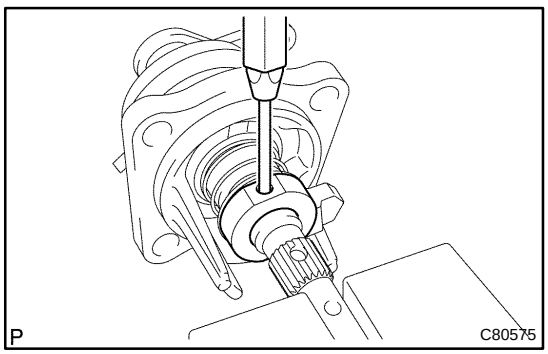

9. REMOVE SELECT INNER LEVER

(a) Using a pin punch (ϕ 5 mm) and a hammer, remove the slotted pin, select inner lever, select return spring No.1 and select return spring seat No.1.

HINT:

Make sure the orientation of the select inner lever.

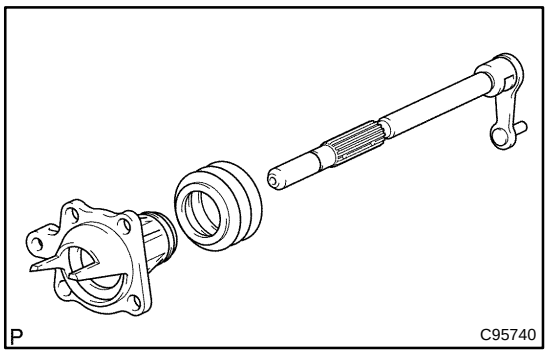

10. REMOVE CONTROL SHAFT COVER

(a) Using 2 screwdrivers and a hammer, tap out the snap ring.

(b) Remove the control shaft cover and shift & select lever shaft dust boot.

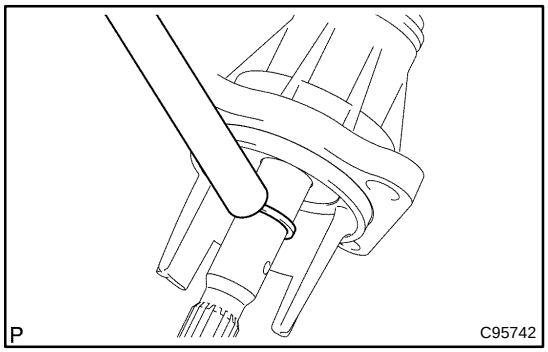

11. REMOVE CONTROL SHAFT COVER OIL SEAL

(a) Using a screwdriver, remove the control shaft cover oil seal from the control shaft cover.

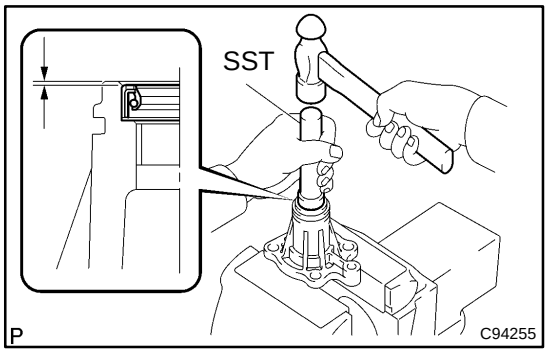

12. INSTALL CONTROL SHAFT COVER OIL SEAL

(a) Using SST and a hammer, install a new control shaft cover oil seal to the control shaft cover.

SST 09950–60010 (09951–00220), 09950–70010 (09951–07100)

Drive in depth: 0.7 ± 0.5 mm (0.0276 ± 0.0197 in.)

(b) Coat the lip of control shaft cover oil seal with MP grease.

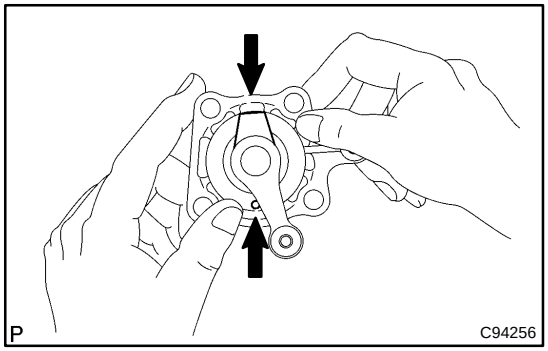

13. INSTALL CONTROL SHAFT COVER

(a) Coat the shift & select lever shaft boot with MP grease, install it to the control shaft cover.

(b) Install the control shaft cover to the shift & select lever.

HINT:

Install the dust boot with the projection up and the hole side down.

(c) Coat the shift & select lever shaft with MP grease.

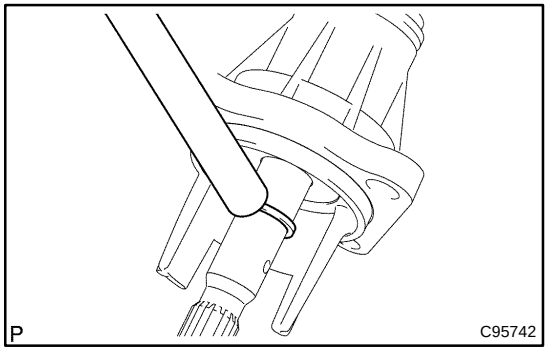

(d) Using a brass bar and a hammer, tap in the snap ring to the shift & select lever shaft.

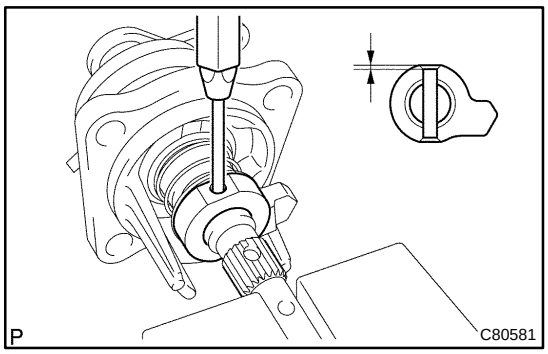

14. INSTALL SELECT INNER LEVER

(a) Coat the select spring seat No.1 with MP grease, install it to the shift & select lever shaft.

(b) Install the select return spring and select inner lever to the shift & select lever shaft.

(c) Using a pin punch (ϕ 5 mm) and a hammer, install the slotted pin to the select lever inner lever.
Drive in depth: 3.0 – 4.0 mm (0.1181 – 0.1575 in.)

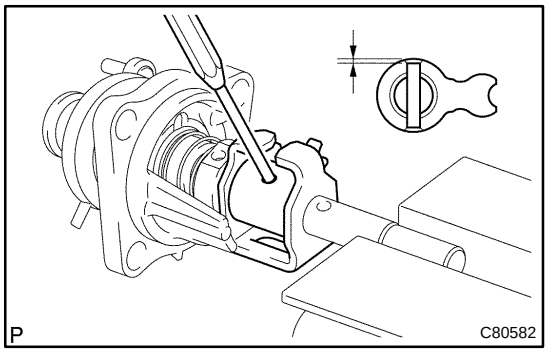

15. INSTALL SHIFT LEVER INNER NO.1

(a) Coat the shift interlock plate and shift lever inner No.1 with MP grease.

(b) Install the shift interlock plate with shift lever inner No.1 to the shift & select lever shaft.

(c) Using a pin punch (ϕ 5 mm) and a hammer, install the slotted pin to the shift lever inner No.1.
Drive in depth: 0 ± 0.5 mm (0 ± 0.0197 in.)

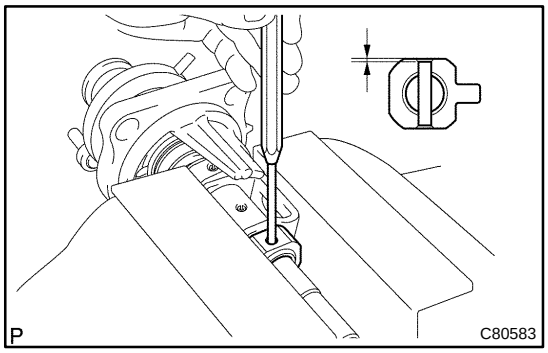

16. INSTALL SHIFT LEVER INNER NO.2

(a) Install the shift lever inner No.2 to the shift & select lever shaft.

(b) Using a pin punch (ϕ 5 mm) and a hammer, install the slotted pin to the shift lever inner No.2.
Drive in depth: 0 ± 0.5 mm (0 ± 0.0197 in.)

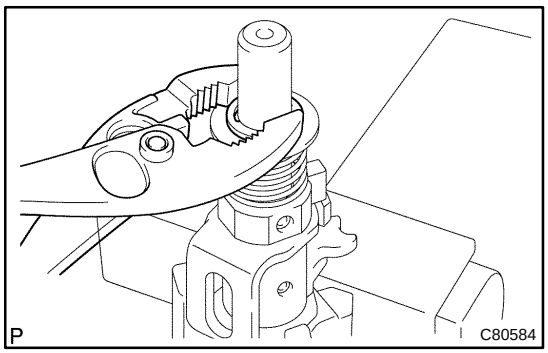

17. INSTALL SELECT SPRING SEAT NO.2

(a) Coat the select spring seat No.2 with MP grease, install it with select return spring to the shift & select lever shaft.

(b) Using a plier, install the E–ring to the shift & select lever shaft.

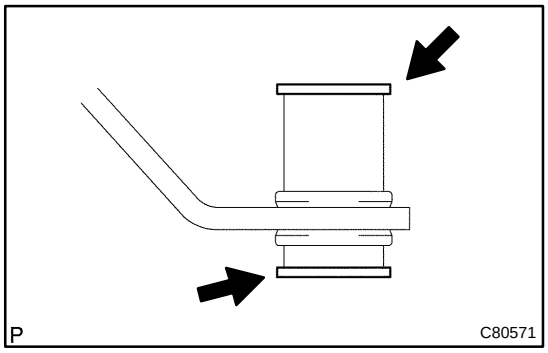

18. INSTALL SELECTING BELLCRANK NO.2 BUSH

(a) Coat the selecting bellcrank No.2 bushes with MP grease, install them to the selecting bellcrank.

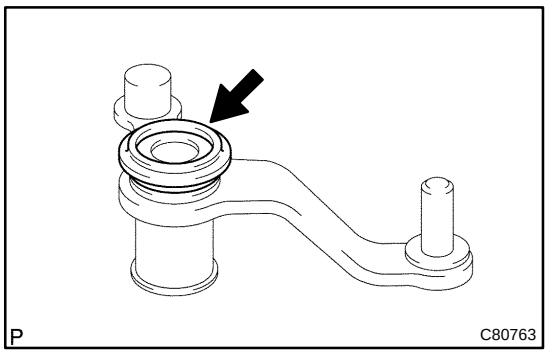

19. INSTALL SELECTING BELLCRANK DUST COVER NO.2

(a) Coat the selecting bellcrank dust cover No.2 with MP grease, install it to the selecting bellcrank No.2.

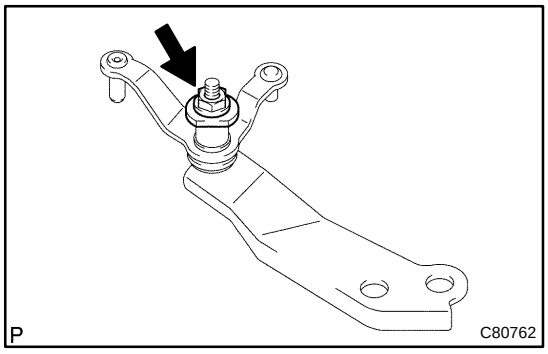

20. INSTALL SELECTING BELL CRANK NO.2

(a) Install the selecting bellcrank No.2, selecting bellcrank No.2 plate washer and spring washer with nut.
Torque: 11.8 N·m (120 kgf·cm, 9 ft·lbf)

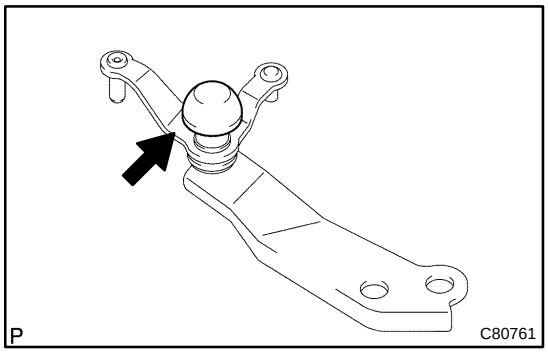

21. INSTALL SELECTING BELLCRANK DUST COVER NO.1

(a) Install the selecting bellcrank dust cover No.1 to the selecting bellcrank assy.

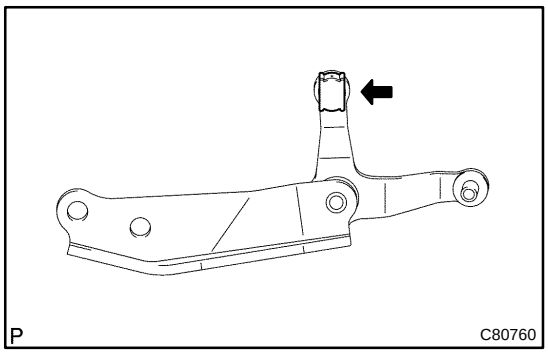

22. INSTALL CONTROL SHIFT LEVER BUSH

(a) Coat the control shift lever bush with MP grease, install it to the selecting bellcrank assy.

MANUAL TRANSAXLE SYSTEM

41075–01

PROBLEM SYMPTOMS TABLE

Use the table below to help you find the cause of the problem. The numbers indicate the priority of the likely cause of the problem. Check each part in order. If necessary, replace parts.

Symptom	Suspect Area	See page
Noise	6. Oil (Level low)	41–2
	7. Oil (Wrong)	41–2
	8. Gear (Worn or damaged)	41–63 41–74
	9. Bearing (Worn or damaged)	41–63 41–74
Oil leakage	1. Oil (Level too high)	41–2
	2. Gasket (Damaged)	41–28
	3. Oil seal (Worn or damaged)	41–3
	4. O–Ring (Worn or damaged)	41–28
Hard to shift or will not shift	1. Control cable (Faulty)	41–9 41–12
	2. Synchronizer ring (Worn or damaged)	41–63 41–74
	3. Shifting key spring (Damaged)	41–63 41–74
Jumps out of gear	1. Locking ball spring (Damaged)	41–28
	2. Gear Shift fork (Worn)	41–28
	3. Gear (Worn or damaged)	41–63 41–74
	4. Bearing (Worn or damaged)	41–63 41–74

CLUTCH MASTER CYLINDER ASSY (MTM)

COMPONENTS

4203O–01

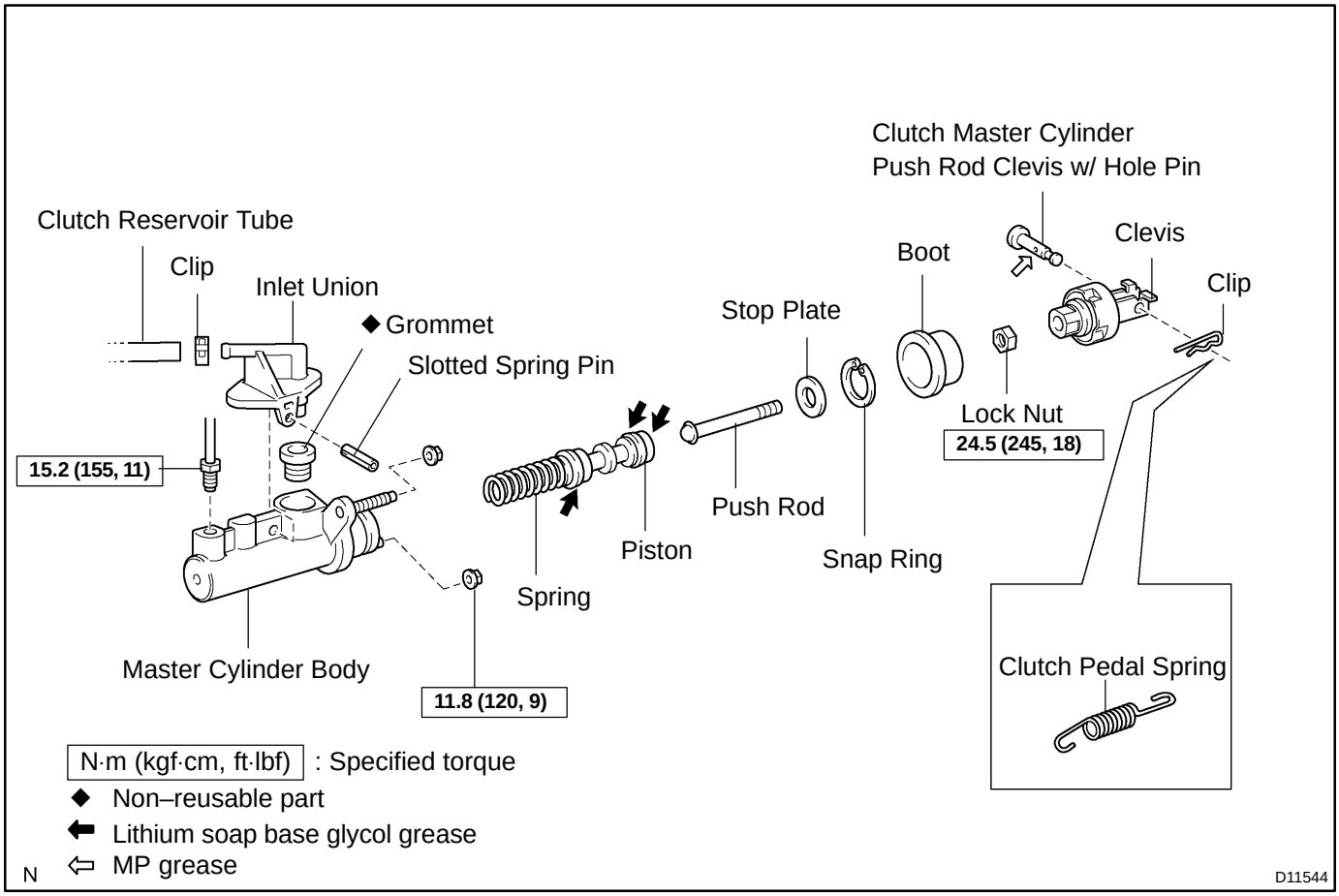

4203P–02

OVERHAUL

1. DRAIN CLUTCH FLUID

2. REMOVE BRAKE MASTER CYLINDER SUB–ASSY (See page 32–13)

3. REMOVE BRAKE BOOSTER ASSY (See page 32–20)

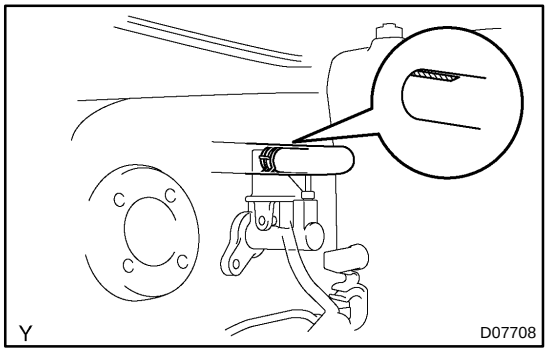

4. DISCONNECT CLUTCH RESERVOIR TUBE

(a) Loosen the clip and disconnect the clutch reservoir tube from the clutch master cylinder assy.

HINT:

Use a container to catch the fluid.

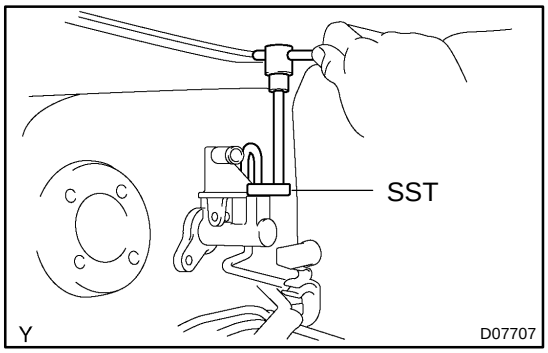

5. DISCONNECT CLUTCH MASTER CYLINDER TO FLEXIBLE HOSE TUBE

(a) Using SST, disconnect the flexible hose tube.

SST 09023–00100

HINT:

Use a container to catch the fluid.

6. REMOVE CLUTCH PEDAL SPRING

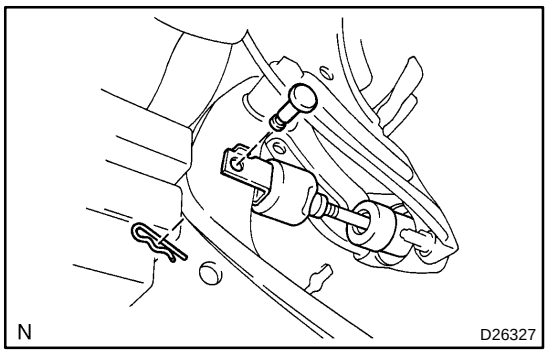

7. REMOVE CLUTCH MASTER CYLINDER PUSH ROD CLEVIS W/HOLE PIN

(a) Remove the clip and hole pin.

8. REMOVE CLUTCH MASTER CYLINDER ASSY

(a) Remove the 2 nuts and clutch master cylinder assy.

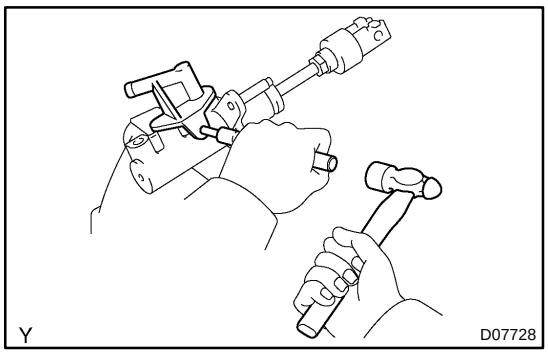

9. REMOVE CLUTCH MASTER CYLINDER KIT

(a) Using a pin punch and a hammer, drive out the slotted spring pin.
(b) Remove the inlet union and grommet.
(c) Loosen the lock nut, and remove the clevis.
(d) Remove the lock nut from the push rod.
(e) Remove the boot from the cylinder body.

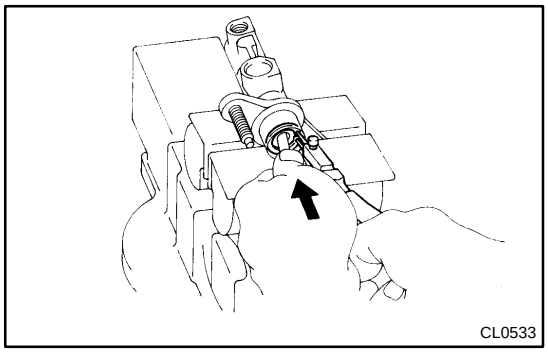

(f) While pushing the push rod, using snap ring pliers, remove the snap ring.
(g) Remove the push rod from the cylinder body.

NOTICE:

The piston may pop up out of the cylinder body. Therefore, slowly remove the push rod from the cylinder body.

(h) Remove the stop plate from the push rod.
(i) Remove the piston with spring from the cylinder.

NOTICE:

Be careful not to damage the inside of the cylinder body.

10. INSTALL CLUTCH MASTER CYLINDER KIT

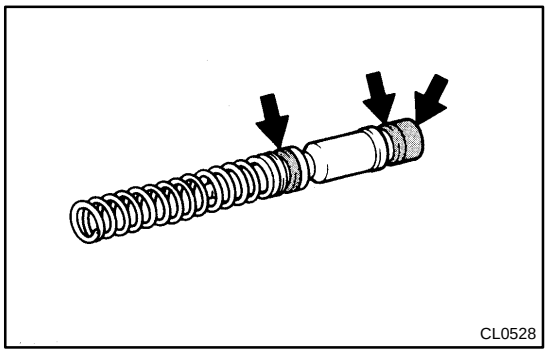

(a) Coat parts with lithium soap base glycol grease, as shown in the illustration.
(b) Install the piston with spring into the cylinder.

NOTICE:

Be careful not to damage the inside of the cylinder body.

(c) Install the stop plate to the push rod.
(d) Install the push rod to the cylinder body.

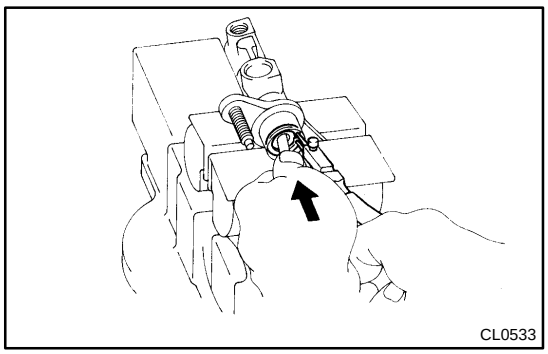

(e) While pushing the push rod, using snap ring pliers, install the snap ring.
(f) Install the boot to the cylinder body.
(g) Install the lock nut to the push rod.
(h) Temporarily install the clevis with the lock nut to the push rod.
(i) Install the inlet union and a new grommet.

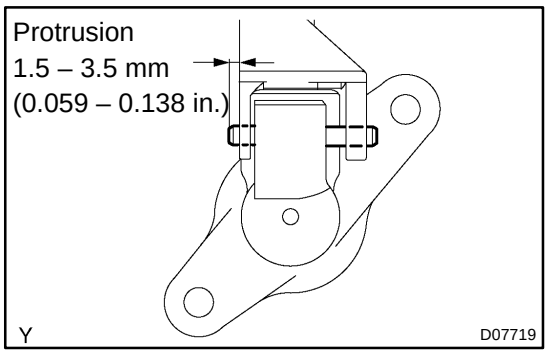

(j) Using a pin punch and a hammer, drive in the slotted spring pin.

11. INSTALL CLUTCH MASTER CYLINDER ASSY

(a) Install the clutch master cylinder assy with the 2 nuts.
Torque: 11.8 N·m (120 kgf·cm, 9 ft·lbf)

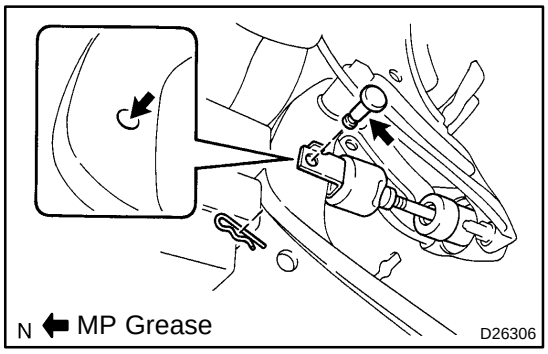

12. INSTALL CLUTCH MASTER CYLINDER PUSH ROD CLEVIS W/HOLE PIN

(a) Apply MP grease to the contact surface of the hole pin and clevis bush.

(b) Connect the clevis to the clutch pedal sub–assy with the hole pin.

HINT:

Install the hole pin from the right side of the vehicle.

(c) Install the clip to the hole pin.

13. INSTALL CLUTCH PEDAL SPRING

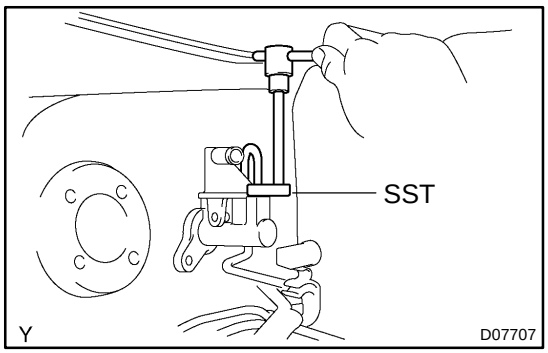

14. CONNECT CLUTCH MASTER CYLINDER TO FLEXIBLE HOSE TUBE

(a) Using SST, connect the flexible hose tube.
SST 09023–00100
Torque: 15.2 N·m (155 kgf·cm, 11 ft·lbf)

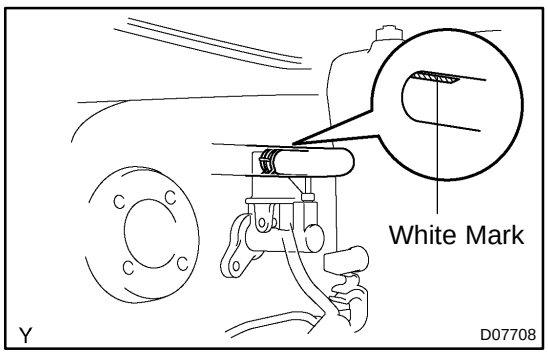

15. CONNECT CLUTCH RESERVOIR TUBE

(a) Connect the clutch reservoir tube with the clip to the clutch master cylinder assy.

NOTICE:

Facing the white mark upward.

16. INSTALL BRAKE BOOSTER ASSY (See page 32–20)
17. INSTALL BRAKE MASTER CYLINDER SUB–ASSY (See page 32–13)
18. BLEED BRAKE LINE (See page 32–4)
19. BLEED CLUTCH PIPE LINE
(a) Fill the brake reservoir tank with clutch fluid and bleed clutch system.
Torque: 8.4 N·m (85 kgf·cm, 73 in.·lbf)
20. CHECK AND ADJUST BRAKE PEDAL HEIGHT (See page 32–6)
21. INSPECT AND ADJUST CLUTCH PEDAL SUB–ASSY (See page 42–2)
22. CHECK BRAKE FLUID LEAKAGE
23. CHECK CLUTCH FLUID LEAKAGE
24. CHECK FLUID LEVEL IN RESERVOIR

CLUTCH PEDAL SUB–ASSY (MTM)

4203L–01

ADJUSTMENT

1. INSPECT AND ADJUST CLUTCH PEDAL SUB–ASSY

(a) Turn over the floor carpet.

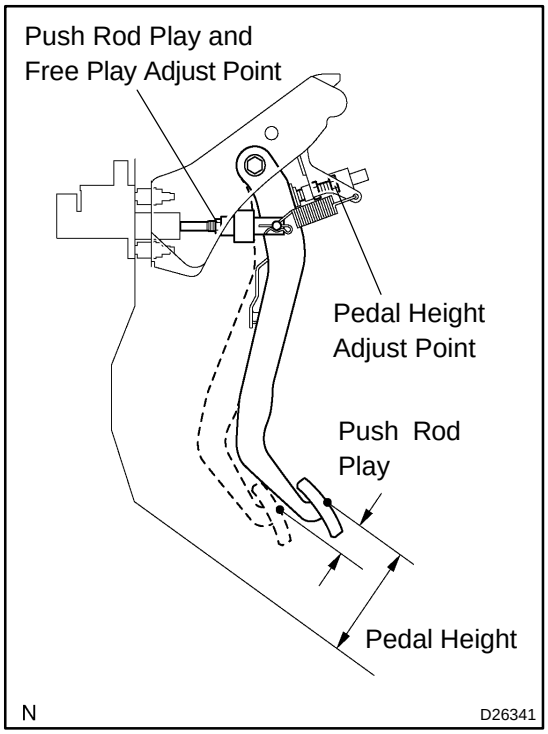

(b) Check that the pedal height is correct.
Pedal height from asphalt sheet:
135.8 – 145.8 mm (5.346 – 5.740 in.)

(c) Adjust the pedal height.
(1) Loosen the lock nut and turn the stopper bolt until the height is correct. Tighten the lock nut.
Torque: 24.5 N·m (245 kgf·cm, 18 ft·lbf)

(d) Check that the pedal free play and push rod play are correct.
(1) Depress the pedal until the clutch resistance begin to be felt.
Pedal free play: 5.0 – 15.0 mm (0.197 – 0591 in.)
(2) Gently depress the pedal until the resistance begins to increase a little.
Push rod play at pedal top:
1.0 – 5.0 mm (0.039 – 0.197 in.)

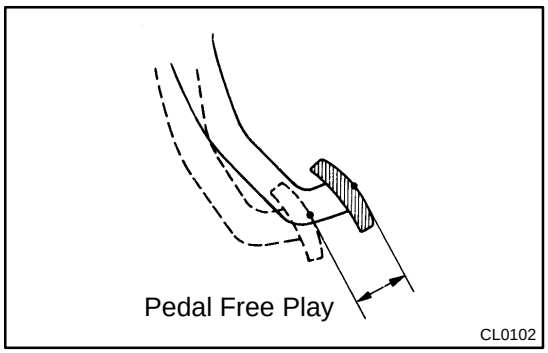

(e) Adjust the pedal free play and push rod play.
(1) Loosen the lock nut and turn the push rod until the free play and push rod play are correct.
(2) Tighten the lock nut.
(3) After adjusting the pedal free play, check the pedal height.
(4) Connect the air duct and install the lower finish panel.

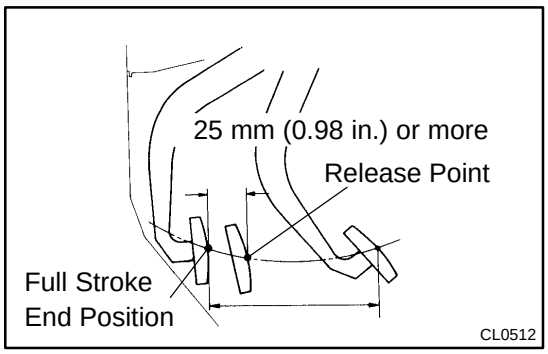

(f) Check the clutch release point.

(1) Pull the parking brake lever and install wheel stopper.

(2) Start the engine and idle the engine.

(3) Without depressing the clutch pedal, slowly shift the shift lever into reverse position until the gears contact.

(4) Gradually depress the clutch pedal and measure the stroke distance from the point that the gear noise stops (release point) up to the full stroke end position.

Standard distance: 25 mm (0.98 in.) or more
(From pedal stroke end position to release point)

If the distance is not as specified, perform the following operations.

- Check pedal height.
- Check push rod play and pedal free play.
- Bleed the clutch line.
- Check the clutch cover assy and disc assy.

4203M–01

COMPONENTS

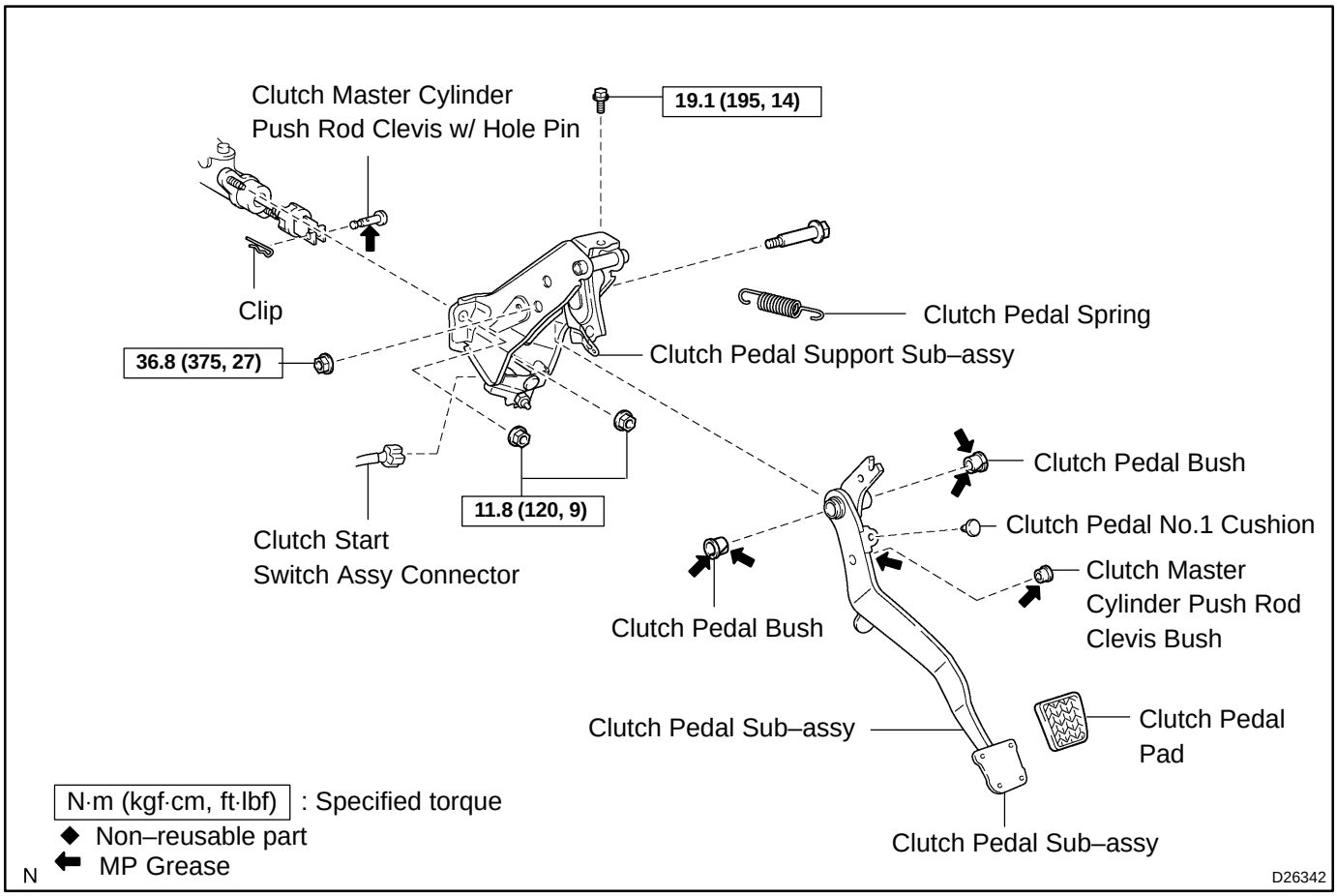

4203N–02

REPLACEMENT

1. REMOVE INSTRUMENT PANEL SUB–ASSY LOWER (See page 71–10)

2. REMOVE CLUTCH PEDAL SPRING

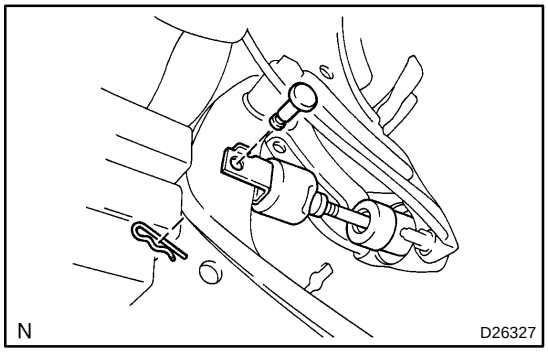

3. REMOVE CLUTCH MASTER CYLINDER PUSH ROD CLEVIS W/HOLE PIN

(a) Remove the clip and hole pin.

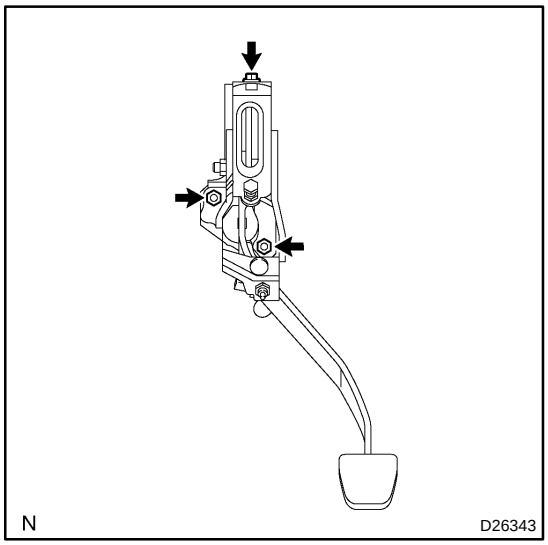

4. REMOVE CLUTCH PEDAL SUPPORT SUB–ASSY

(a) w/ Cruise control:
Disconnect the clutch switch assy connector.

(b) Disconnect the clutch start switch assy connector.

(c) Remove the 2 nuts, bolt and clutch pedal support assy.

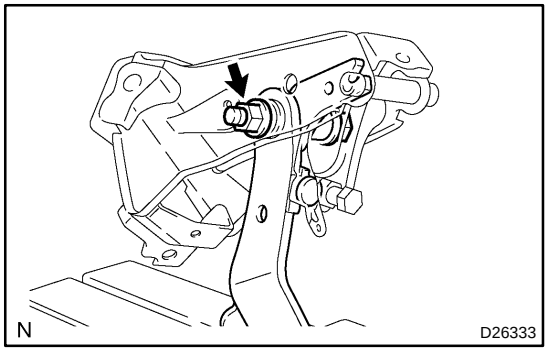

5. REMOVE CLUTCH PEDAL SUB–ASSY

(a) Remove the bolt and nut.

(b) Remove the clutch pedal sub–assy from the clutch pedal support.

6. REMOVE CLUTCH PEDAL PAD

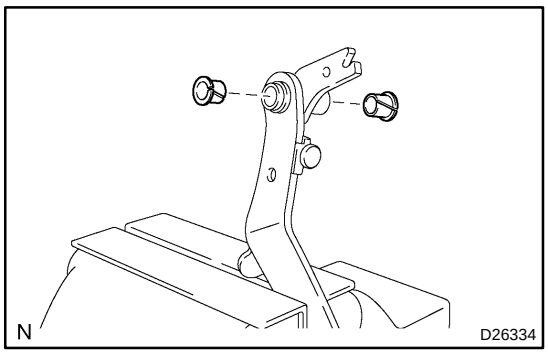

7. REMOVE CLUTCH PEDAL BUSH

(a) Remove the 2 bushes from the clutch pedal.

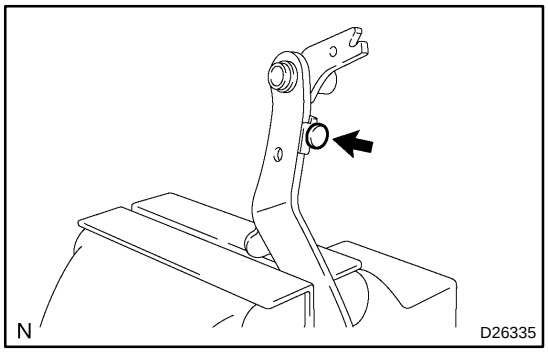

8. REMOVE CLUTCH PEDAL NO.1 CUSHION

(a) Using needle–nose pliers, remove the No.1 cushion from the clutch pedal.

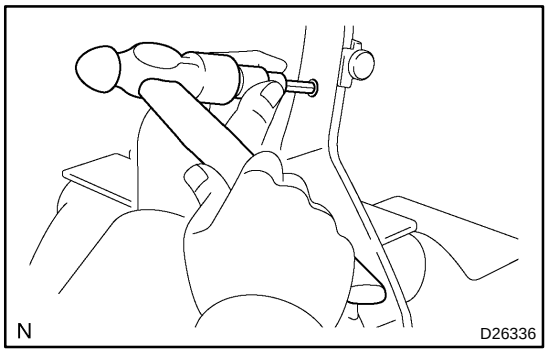

9. REMOVE CLUTCH MASTER CYLINDER PUSH ROD CLEVIS BUSH

(a) Using a 8 mm hexagon wrench and a hammer, remove the clevis bush from the clutch pedal sub–assy.

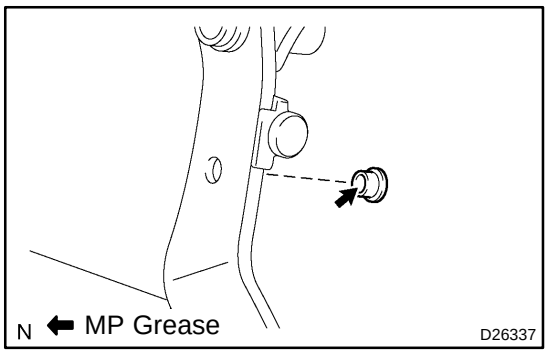

10. INSTALL CLUTCH MASTER CYLINDER PUSH ROD CLEVIS BUSH

(a) Apply MP grease to inside of a new clevis bush.

(b) Install the clevis bush to the clutch pedal.

HINT:

Install the clevis bush from the right side of the vehicle.

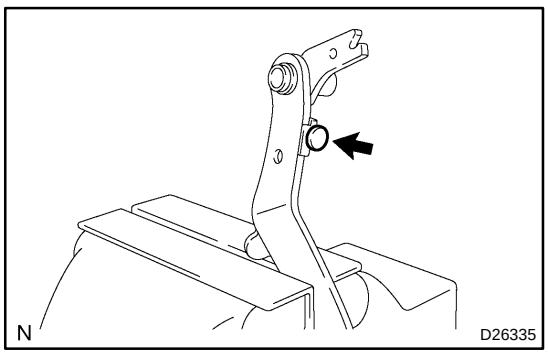

11. INSTALL CLUTCH PEDAL NO.1 CUSHION

(a) Using needle–nose pliers, install the No.1 cushion to the clutch pedal.

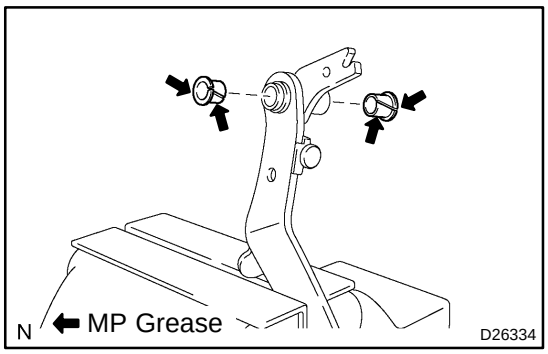

12. INSTALL CLUTCH PEDAL BUSH

(a) Apply MP grease to both side of 2 new bushes.

(b) Install the 2 bushes to the clutch pedal.

13. INSTALL CLUTCH PEDAL PAD

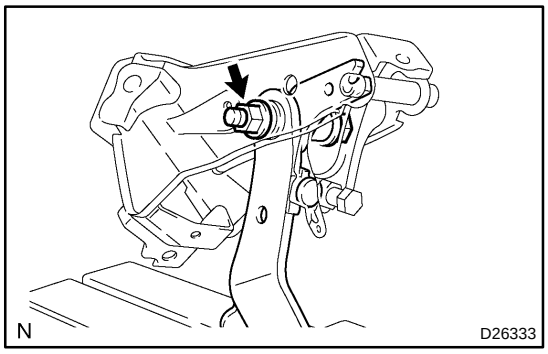

14. INSTALL CLUTCH PEDAL SUB–ASSY

(a) Install the clutch pedal sub–assy to the clutch pedal support with the bolt and nut.

Torque: 36.8 N·m (375 kgf·cm, 27 ft·lbf)

HINT:

Install the bolt from the right side of the vehicle.

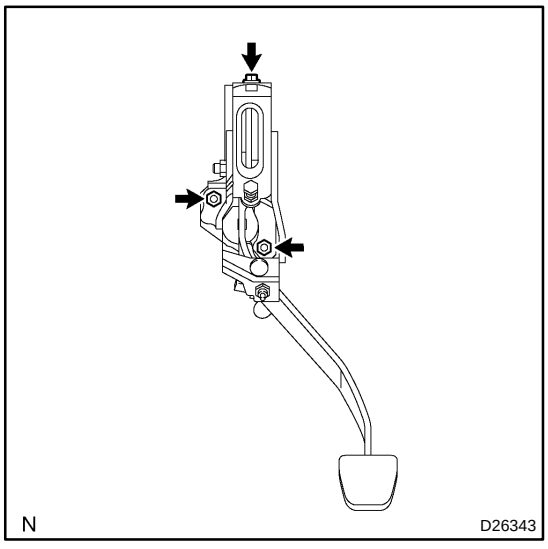

15. INSTALL CLUTCH PEDAL SUPPORT SUB–ASSY

(a) Install the clutch pedal support to the vehicle with the 2 nuts and bolt.

Torque:

Bolt: 19.1 N·m (195 kgf·cm, 14 ft·lbf)

Nut: 11.8 N·m (120 kgf·cm, 9 ft·lbf)

(b) Connect the clutch start switch assy connector.

(c) w/ Cruise control:

Connect the clutch switch assy connector.

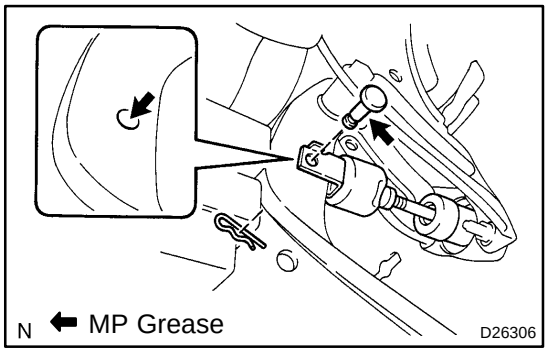

16. INSTALL CLUTCH MASTER CYLINDER PUSH ROD CLEVIS W/HOLE PIN

(a) Apply MP grease to the contact surface of the hole pin and clevis bush.

(b) Connect the clevis to the clutch pedal sub–assy with the hole pin.

HINT:

Install the hole pin from the right side of the vehicle.

(c) Install the clip to the hole pin.

17. INSTALL CLUTCH PEDAL SPRING
18. INSTALL INSTRUMENT PANEL SUB–ASSY LOWER
19. INSPECT SRS WARNING LIGHT (See page 05–424)
20. INSPECT AND ADJUST CLUTCH PEDAL SUB–ASSY (See page 42–2)

CLUTCH RELEASE CYLINDER ASSY (MTM)

4203Q–01

COMPONENTS

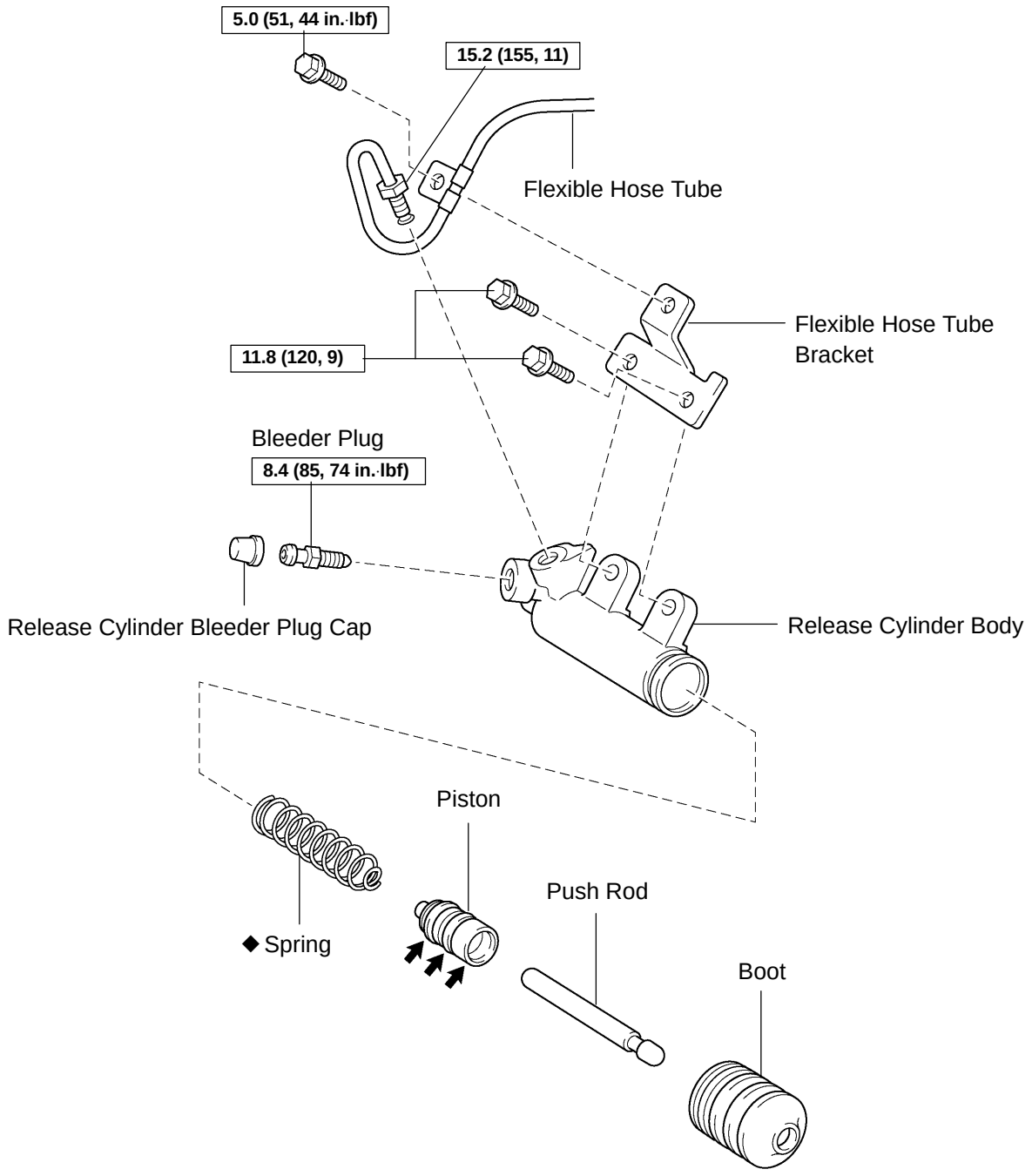

N·m (kgf·cm, ft·lbf) : Specified torque

◆ Non–reusable part

⬅ Lithium soap base glycol grease

N

D11545

OVERHAUL

1. DRAIN CLUTCH FLUID

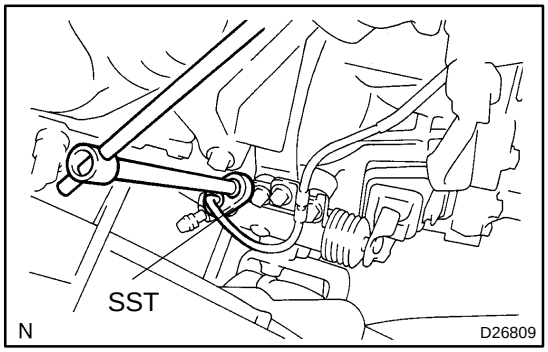

2. DISCONNECT CLUTCH RELEASE CYLINDER TO FLEXIBLE HOSE TUBE

(a) Using SST, disconnect the flexible hose tube.
SST 09023–00100

HINT:
Use a container to catch the fluid.

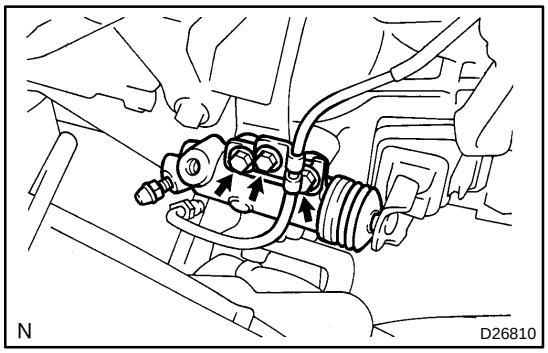

3. REMOVE CLUTCH RELEASE CYLINDER ASSY

(a) Remove the 3 bolts, clutch release cylinder assy and clutch line bracket.

4. REMOVE CLUTCH RELEASE CYLINDER KIT

(a) Remove the boot from the cylinder body.
(b) Remove the push rod from the cylinder body.
(c) Remove the piston from the cylinder body.

NOTICE:

Be careful not to damage the inside of the cylinder body.

(d) Remove the spring from the cylinder body.
(e) Remove the bleeder plug cap from the bleeder plug.

5. REMOVE RELEASE CYLINDER BLEEDER PLUG

6. INSTALL RELEASE CYLINDER BLEEDER PLUG

Torque: 8.4 N·m (85 kgf·cm, 74 in.·lbf)

7. INSTALL CLUTCH RELEASE CYLINDER KIT

(a) Install the bleeder plug cap to the bleeder plug.

(b) Install a new spring to the cylinder body.

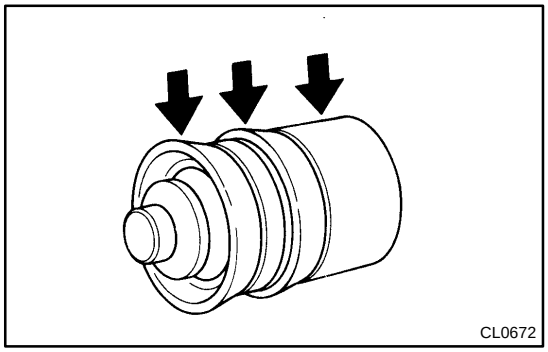

(c) Coat parts with lithium soap base glycol grease, as shown in the illustration.

(d) Install the piston to the cylinder body.

NOTICE:

Be careful not to damage the inside of the cylinder body.

(e) Install the push rod to the cylinder body.

(f) Install the boot to the cylinder body.

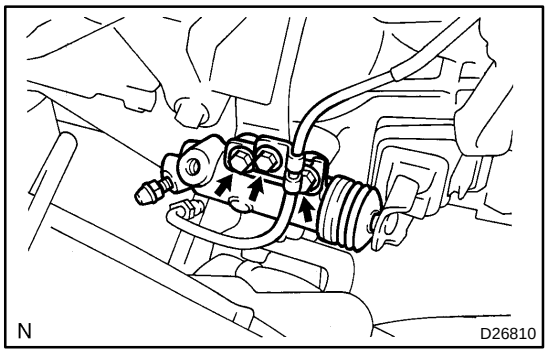

8. INSTALL CLUTCH RELEASE CYLINDER ASSY

(a) Install the clutch release cylinder and clutch line bracket with the 2 bolts.

Torque: 11.8 N·m (120 kgf·cm, 9 ft·lbf)

(b) Install the flexible hose tube with the bolt.

Torque: 5.0 N·m (51 kgf·cm, 44 in.·lbf)

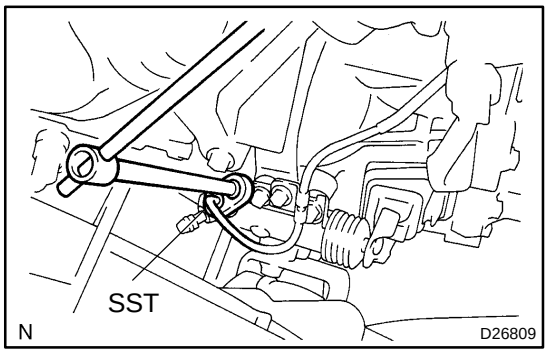

9. CONNECT CLUTCH RELEASE CYLINDER TO FLEXIBLE HOSE TUBE

(a) Using SST, connect the flexible hose tube.

SST 09023–00100

Torque: 15.2 N·m (155 kgf·cm, 11 ft·lbf)

10. BLEED CLUTCH PIPE LINE

(a) Fill the brake reservoir tank with brake fluid and bleed clutch system.

Torque: 8.4 N·m (85 kgf·cm, 74 in.·lbf)

11. CHECK CLUTCH FLUID LEAKAGE

42029–02

INSPECTION

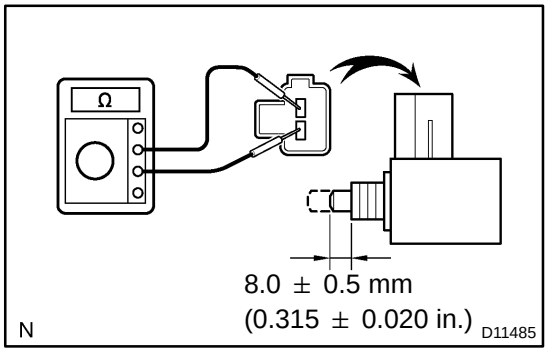

1. INSPECT CLUTCH START SWITCH ASSY

(a) Check the continuity between the terminals when the switch is ON and OFF.

Switch position	Condition
ON (pushed)	Continuity
OFF (free)	No continuity

CLUTCH START SWITCH ASSY (MTM)

42028–02

ON–VEHICLE INSPECTION

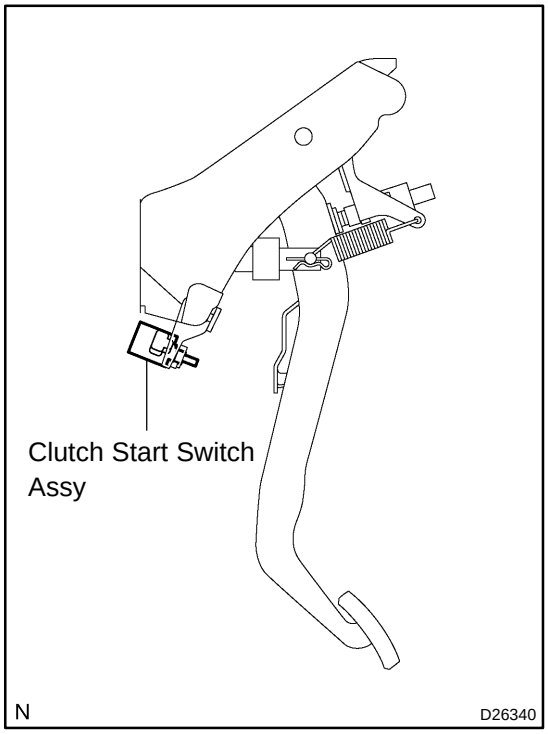

1. CHECK CLUTCH START SYSTEM

(a) Check that the engine does not start when the clutch pedal is released.

(b) Check that the engine starts when the clutch pedal is fully depressed.

If necessary, replace the clutch start switch assy.

4203U–01

REPLACEMENT

1. REMOVE CLUTCH START SWITCH ASSY

(a) Disconnect the clutch start switch assy connector.

(b) Remove the nut and clutch start switch assy from the clutch pedal support.

2. INSTALL CLUTCH START SWITCH ASSY

(a) Install the clutch start switch assy with the nut.

Torque: 15.68 N·m (160 kgf·cm, 12 ft·lbf)

(b) Connect the clutch start switch assy connector.

3. INSPECT CLUTCH START SWITCH ASSY (See page 42–22)

CLUTCH UNIT (MTM)

COMPONENTS

4203S–01

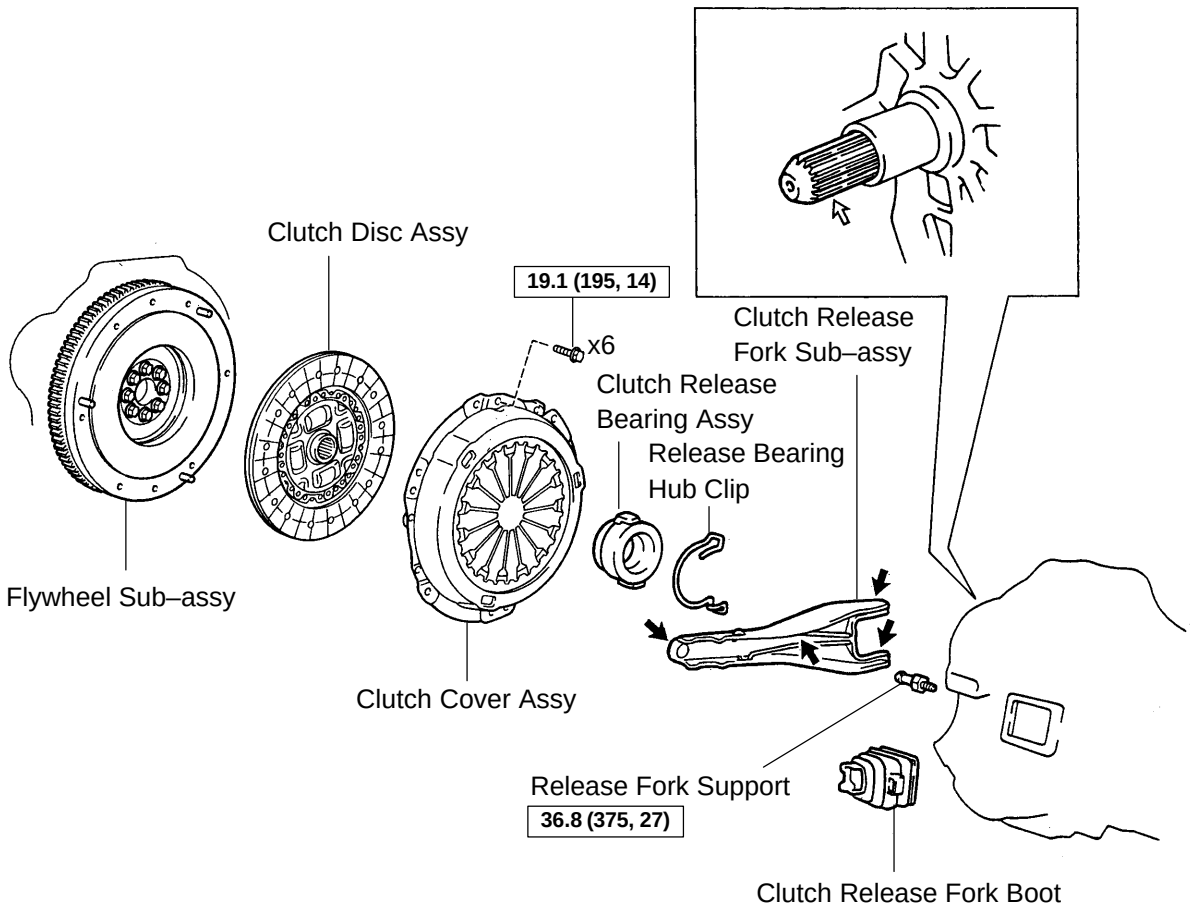

N·m (kgf·cm, ft·lbf) : Specified torque

⇦ Clutch spline grease

⬅ Release hub grease

D26321

4203T–01

OVERHAUL

1. REMOVE MANUAL TRANSAXLE ASSY (See page 41–17)

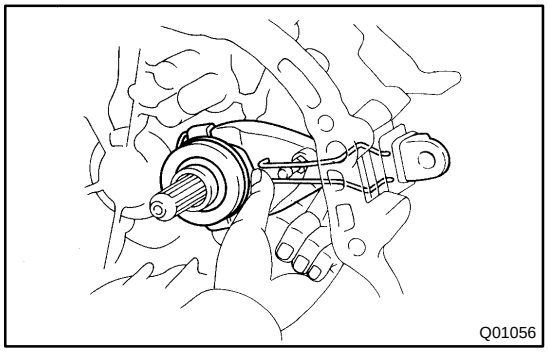

2. REMOVE CLUTCH RELEASE FORK SUB–ASSY

(a) Remove the clutch release fork with clutch release bearing from the transaxle assy.

3. REMOVE CLUTCH RELEASE BEARING ASSY

(a) Remove the clutch release bearing assy from the clutch release fork.

4. REMOVE RELEASE FORK SUPPORT

(a) Remove the release fork support from the transaxle assy.

5. REMOVE RELEASE BEARING HUB CLIP

6. REMOVE CLUTCH RELEASE FORK BOOT

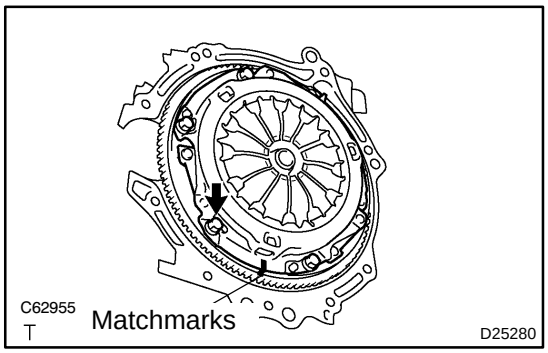

7. REMOVE CLUTCH COVER ASSY

(a) Align the matchmarks on the clutch cover assy with the one on the flywheel sub–assy.

(b) Loosen each set bolt one turn at a time until spring tension is released.

(c) Remove the 6 bolts, and pull off the clutch cover assy.

NOTICE:

Do not drop the clutch disc assy.

8. REMOVE CLUTCH DISC ASSY

NOTICE:

Keep the lining part of the clutch disc assy, the pressure plate and surface of the flywheel sub–assy away from oil and foreign attachment.

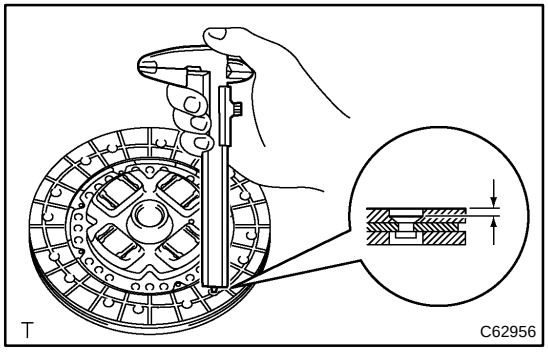

9. INSPECT CLUTCH DISC ASSY

(a) Using vernier calipers, measure the rivet head depth.
Maximum rivet depth: 0.3 mm (0.012 in.)

If necessary, replace the clutch disc assy.

(b) Install the clutch disc assy to the transaxle assy.

NOTICE:

Take care not to insert the clutch disc assy in the wrong direction.

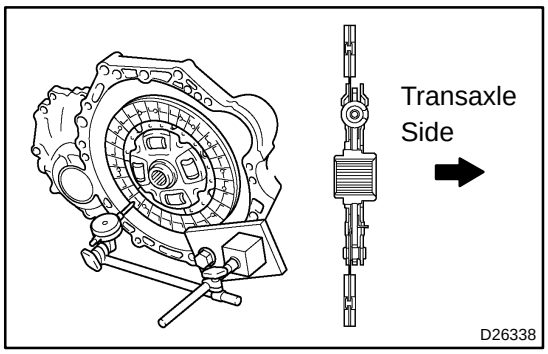

(c) Using a dial indicator, check the clutch disc assy runout.
Minimum runout: 0.8 mm (0.031 in.)

If necessary, replace the clutch disc assy.

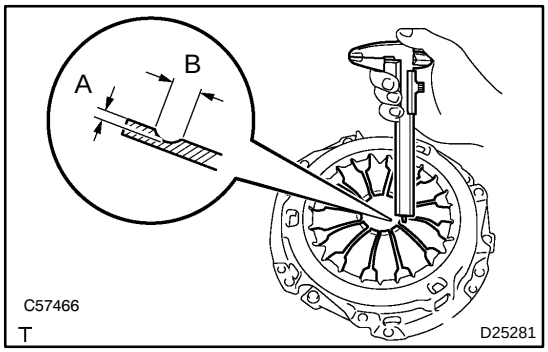

10. INSPECT CLUTCH COVER ASSY

(a) Using vernier calipers, inspect the diaphragm spring for depth and width of wear.
Maximum:
A (Depth): 0.5 mm (0.020 in.)
B (Width): 6.0 mm (0.236 in.)

If necessary, replace clutch cover assy.

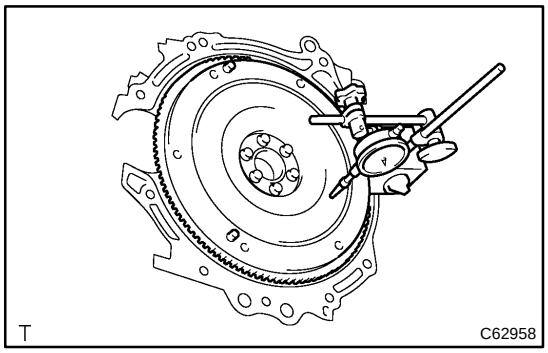

11. INSPECT FLYWHEEL SUB–ASSY

(a) Using a dial indicator, inspect the flywheel sub–assy run-out.
Maximum runout: 0.1 mm (0.004 in.)

If necessary, replace the flywheel sub–assy.

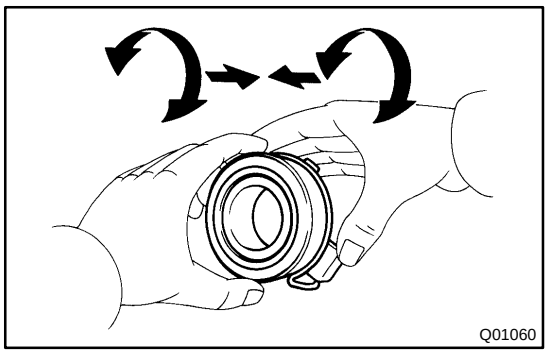

12. INSPECT CLUTCH RELEASE BEARING ASSY

(a) Turn the release bearing by hand while applying force in the axial direction.

HINT:

The bearing is permanently lubricated and requires no cleaning or lubrication.

If necessary, replace the release bearing assy.

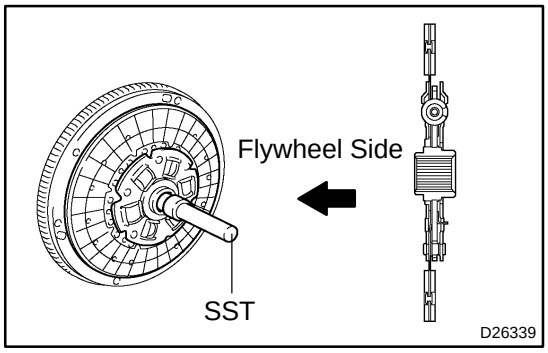

13. INSTALL CLUTCH DISC ASSY

(a) Insert SST in the clutch disc assy, then insert them in the flywheel sub–assy.
SST 09301–00210

NOTICE:

Take care not to insert clutch disc assy in the wrong direction.

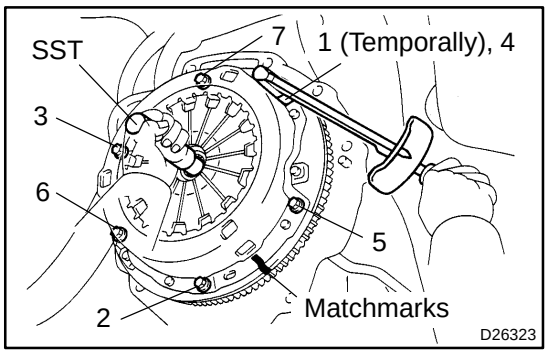

14. INSTALL CLUTCH COVER ASSY

(a) Align the matchmarks on the clutch cover assy and flywheel sub–assy.

(b) Following the procedures shown in the illustration, tighten the 6 bolts, in the order starting the bolt locating near the knock pin on the top.

Torque: 19.1 N·m (195 kgf·cm, 14 ft·lbf)

HINT:

- Following the order in the illustration, tighten the bolts at a time evenly.
- Move SST up and down, right and left lightly, after checking that the disc is in the center, tighten the bolts.

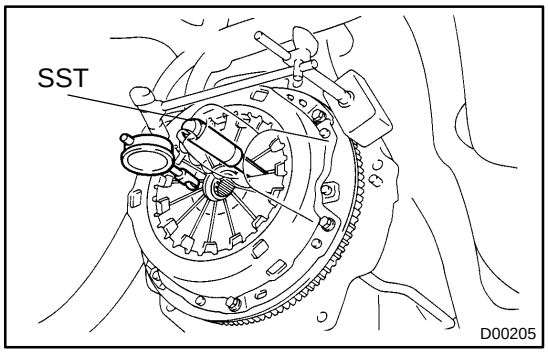

15. INSPECT AND ADJUST CLUTCH COVER ASSY

(a) Using a dial indicator with roller instrument, check the diaphragm spring tip alignment.

Maximum non–alignment: 0.5 mm (0.020 in.)

If alignment is not as specified, using SST, adjust the diaphragm spring tip alignment.

SST 09333–00013

16. INSTALL RELEASE FORK SUPPORT

(a) Install the release fork support to the transaxle assy.

Torque: 36.8 N·m (375 kgf·cm, 27 ft·lbf)

17. INSTALL RELEASE BEARING HUB CLIP

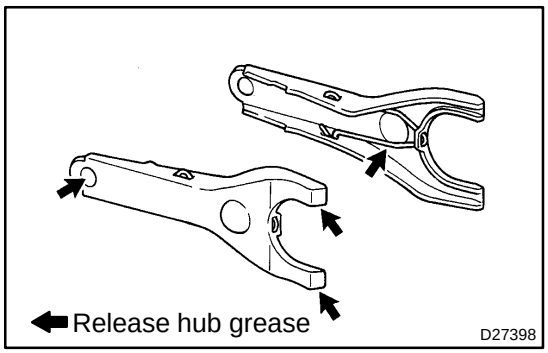

18. INSTALL CLUTCH RELEASE FORK SUB–ASSY

(a) Apply release hub grease to the release fork and release bearing assy contact, release fork and push rod contact and release fork pivot points.

Sealant:

Part No. 08887–01806, RELEASE HUB GREASE or equivalent

(b) Install the release fork to the release bearing assy.

19. INSTALL CLUTCH RELEASE BEARING ASSY

(a) Apply the clutch spline grease to the input shaft spline.

Sealant:

Part No. 08887–01706, CLUTCH SPLINE GREASE or equivalent

(b) Install the bearing to the release fork, and then install them to the transaxle assy.

NOTICE:

After the installation, move the folk forward and backward to check that the release bearing slides smoothly.

20. INSTALL CLUTCH RELEASE FORK BOOT

21. INSTALL MANUAL TRANSAXLE ASSY (See page 41–17)

CLUTCH SYSTEM (MTM)

PROBLEM SYMPTOMS TABLE

4203K–01

HINT:

Use the table below to help you find the cause of the problem. The numbers indicate the priority of the likely cause of the problem. Check each part in order. If necessary, replace these parts.

Symptom	Suspect Area	See page
Clutch grabs/chatters	5. Engine mounting (Loosen)	–
	6. Clutch disc assy (Runout is excessive)	42–18
	7. Clutch disc assy (Oily)	42–18
	8. Clutch disc assy (Worn out)	42–18
	9. Clutch disc torsion rubber (Damaged)	42–18
	10. Clutch disc assy (Glazed)	42–18
	11. Diaphragm spring (Out of tip alignment)	42–18
Clutch pedal spongy	1. Clutch Line (Air in line)	–
	2. Master cylinder cup (Damaged)	42–10
	3. Release cylinder rubber (Damaged)	42–15
Clutch noisy	1. Clutch release bearing assy (Worn, dirty, or damaged)	42–15
	2. Clutch disc torsion rubber (Damaged)	42–18
Clutch slips	1. Clutch pedal (Free play out of adjustment)	42–2
	2. Clutch disc assy (Oily)	42–18
	3. Clutch disc assy (Worn out)	42–18
	4. Diaphragm spring (Damaged)	42–18
	5. Pressure plate (Distortion)	42–18
	6. Flywheel sub–assy (Distortion)	–
Clutch does not disengage	1. Clutch pedal (Free play out of adjustment)	42–2
	2. Clutch line (Air in line)	–
	3. Master cylinder cup (Damaged)	42–10
	4. Release cylinder cup (Damaged)	42–15
	5. Clutch disc assy (Out of true)	42–18
	6. Clutch disc assy (Runout of excessive)	42–18
	7. Clutch disc assy (Lining broken)	42–18
	8. Clutch disc assy (Dirty or burned)	42–18
	9. Clutch disc assy (Oily)	42–18
	10. Clutch disc assy (Lack of spline grease)	42–18

5000P–03

ON–VEHICLE INSPECTION

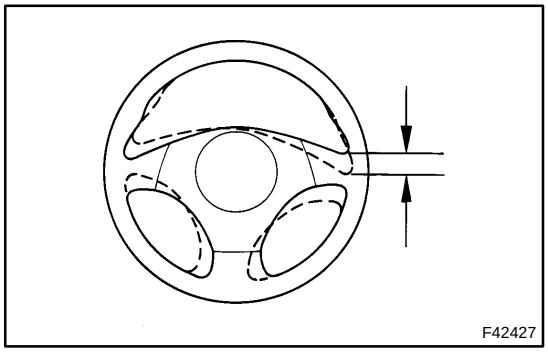

1. CHECK STEERING WHEEL FREEPLAY

(a) Stop the vehicle and face the tires straight ahead.

(b) Rock the steering wheel gently up and down by your hand, check the steering wheel freeplay.

Maximum freeplay: 30 mm (1.18 in.)

STEERING SYSTEM

5003T–01

PRECAUTION

1. HANDLING PRECAUTIONS ON STEERING SYSTEM

(a) Care must be taken when replacing parts. Incorrect replacement may affect the performance of the steering system and result in a driving hazard.

2. HANDLING PRECAUTIONS ON SRS AIRBAG SYSTEM

(a) The vehicle is equipped with SRS (Supplemental Restraint System) such as the driver airbag and front passenger airbag. Failure to carry out service operation in the correct sequence could cause the SRS to unexpectedly deploy during servicing, possibly leading to a serious accident. Before servicing (including removal or installation of parts, inspection or replacement), be sure to read the precautionary notice for the supplemental restraint system (See page 60–1).

5002Q–02

REPAIR

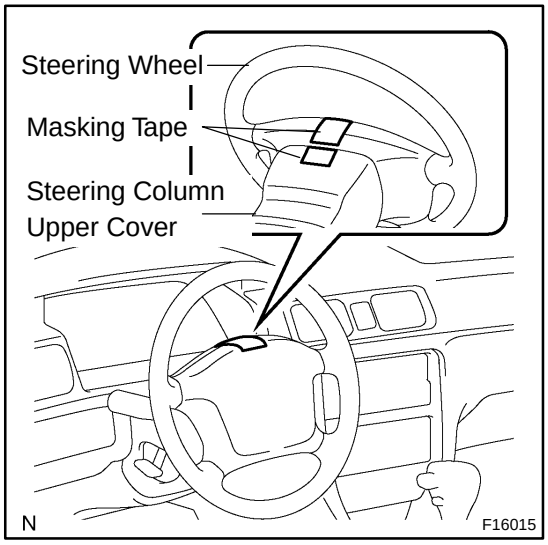

1. STEERING OFF CENTER REPAIR PROCEDURE

(a) Inspect steering wheel off center.

(1) Apply masking tape on the top center of the steering wheel and steering column upper cover.

(2) Driving the vehicle on a straight line for 100 meters at a constant speed of 35 mph (56 km/h), and hold the steering wheel to maintain the course.

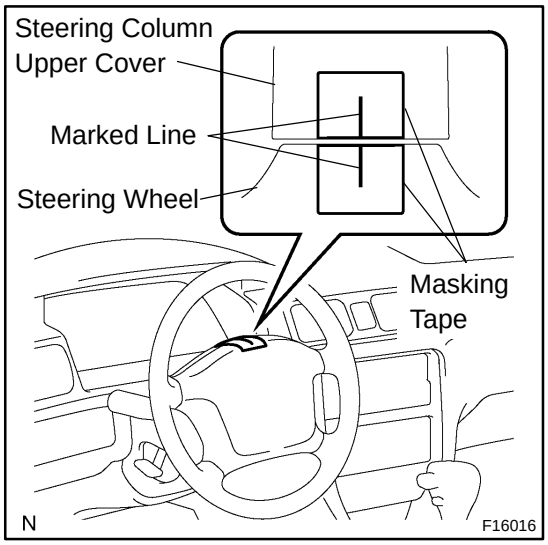

(3) Draw a line on the masking tape as shown in the illustration.

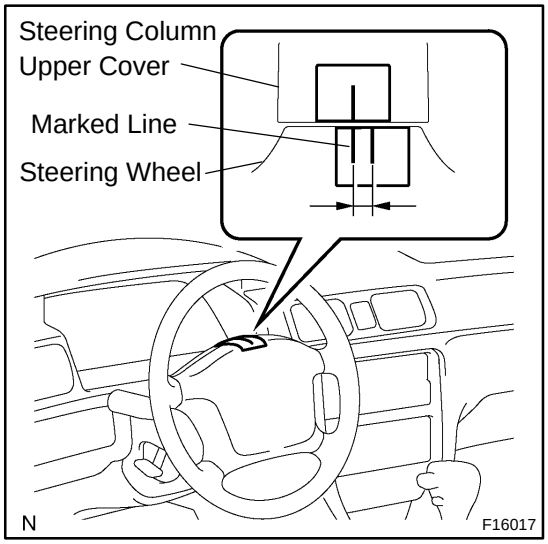

(4) Turn the steering wheel to its straight position.

HINT:

Refer to the upper surface of the steering wheel, steering spoke and SRS airbag line for the straight position.

(5) Draw a new line on the masking tape or the steering wheel as shown in the illustration.

(6) Measure the distance between the 2 lines on the masking tape of the steering wheel.

(7) Convert the measured distance to steering angle.

Measured distance 1 mm (0.04 in.) = Steering angle approximately 1 deg.

HINT:

Make a note of the steering angle.

(b) Adjust steering angle.

NOTICE:

The adjustment method for steering angle varies depending on the models. Check whether it is type A or B.

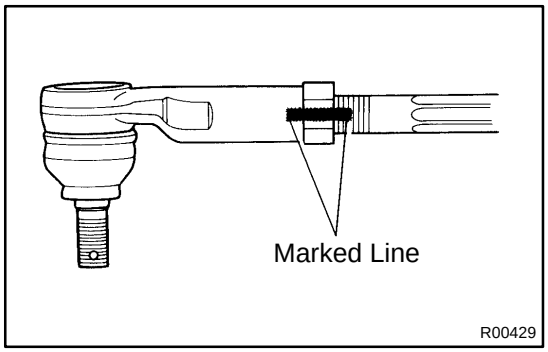

(1) Draw a line on the RH and LH tie rod and rack ends where it can easily be seen.

(2) Using a paper gauge, measure the distance from RH and LH tie rod ends to the rack end screws.

HINT:

- Measure the RH side and LH side.
- Make a note of the measured values.

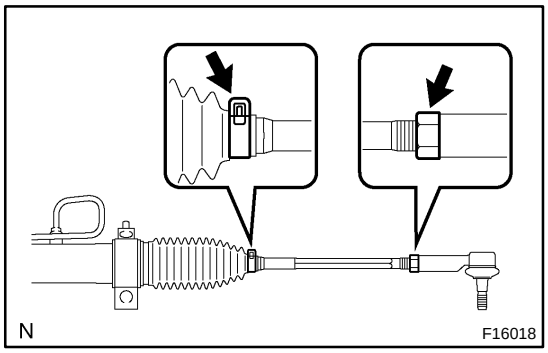

(3) Remove the RH and LH boot clips from the rack boots.

(4) Loosen the RH and LH lock nuts.

(5) Turn the RH and LH rack end by the same amount (but in different directions) according to the steering angle.

1 turn 360 deg. of rack end (1.5 mm (0.059 in.) horizontal movement) – 12 deg. of steering angle.

(6) Tighten the RH and LH lock nuts by the specified torque.

Torque: 74 N·m (750 kgf·cm, 54 ft·lbf)

NOTICE:

Make sure that the difference in length between RH and LH tie rod ends and rack end screws are within 1.5 mm (0.059 in.).

(7) Install the RH and LH boot clips.

STEERING COLUMN ASSY

COMPONENTS

5003U–01

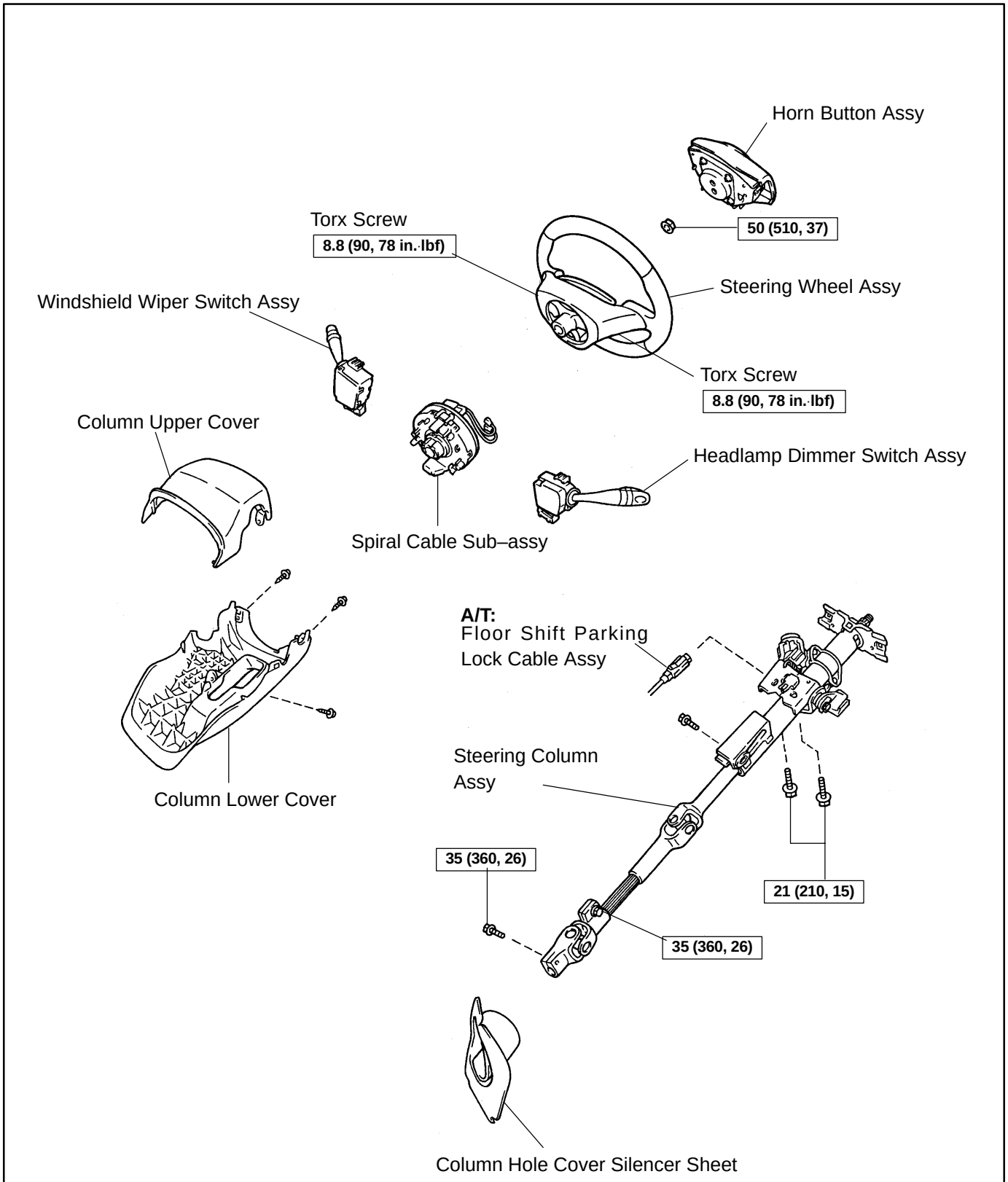

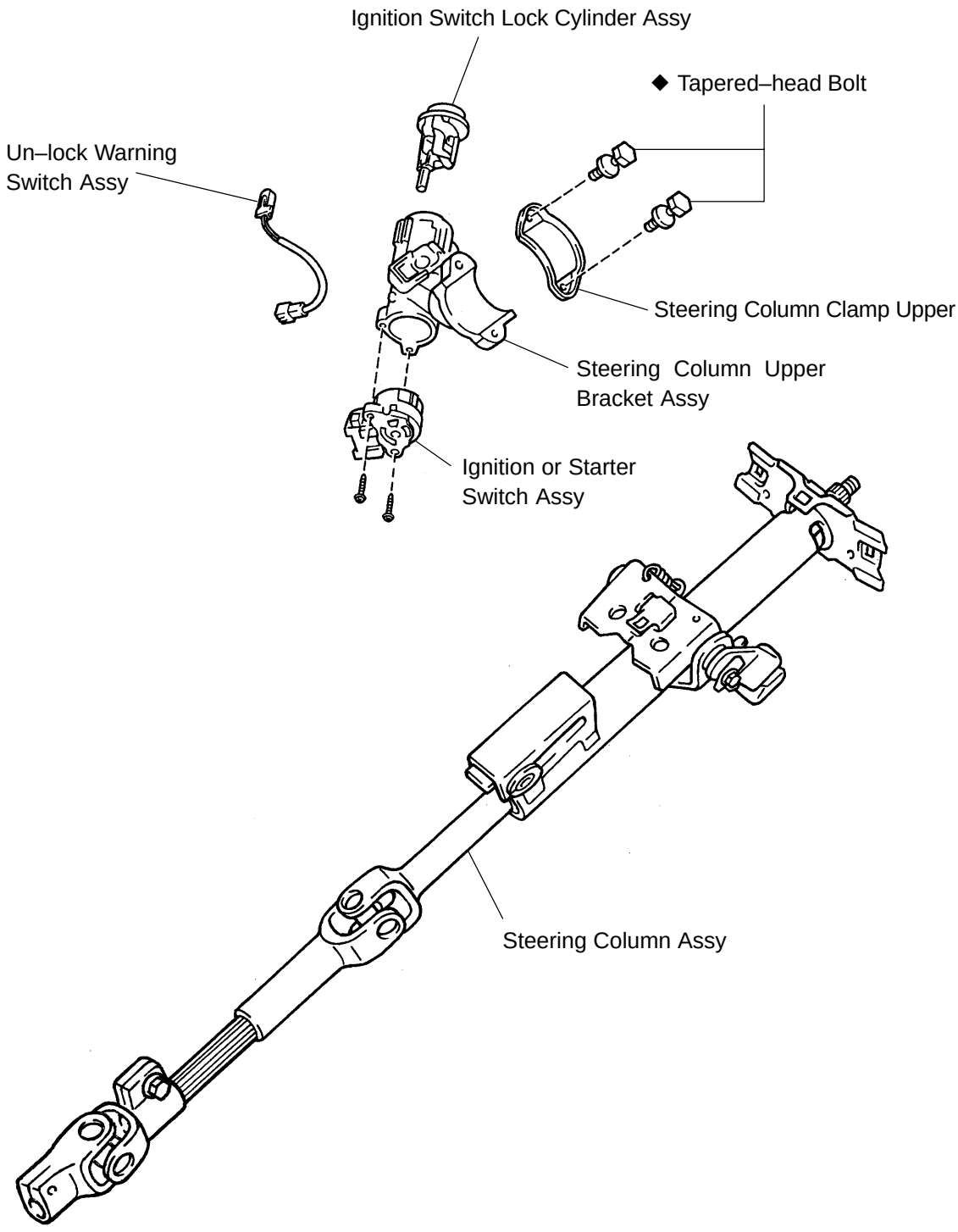

◆ Non–reusable part

N

F42415

5003V–02

OVERHAUL

1. PRECAUTION

2. DISCONNECT BATTERY NEGATIVE TERMINAL

3. INSPECT PLACE FRONT WHEELS FACING STRAIGHT AHEAD

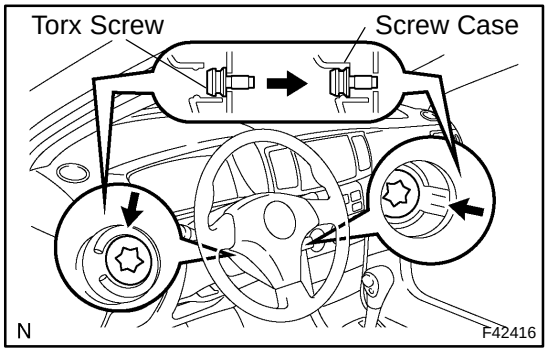

4. REMOVE HORN BUTTON ASSY

NOTICE:

If the airbag connector is disconnected with the ignition switch being at ON, DTCs will be recorded.

(a) Using a torx socket wrench, loosen the 2 torx screws until the groove along the screw circumference catches on the screw case.

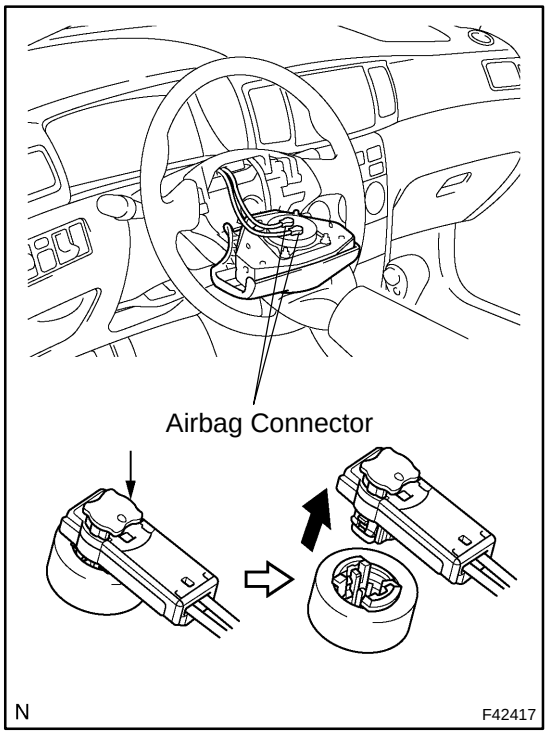

(b) Pull out the horn button assy from the steering wheel.

(c) Using a screwdriver, release the lock part of each airbag connector and disconnect the 2 airbag connectors.

NOTICE:

When removing the horn button assy, take care not to pull the airbag wire harness.

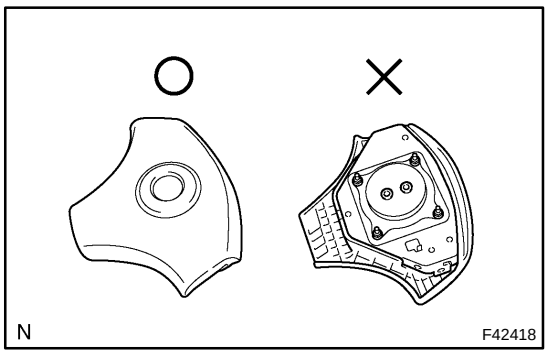

CAUTION:

- **When storing the horn button assy, keep the upper surface of the pad facing upward.**
- **Never disassemble the horn button assy.**

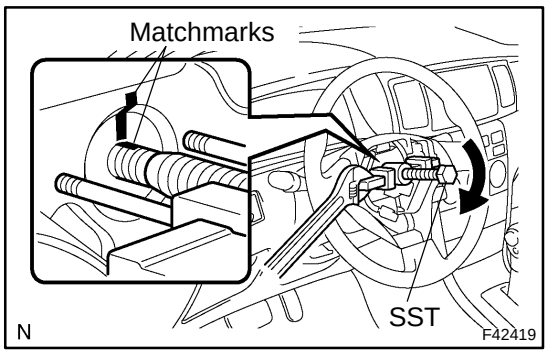

5. REMOVE STEERING WHEEL ASSY

(a) Disconnect the connector.

(b) Remove the steering wheel assy set nut.

(c) Place matchmarks on the steering wheel assy and main shaft assy.

(d) Using SST, remove the steering wheel assy.

SST 09950–50013 (09951–05010, 09952–05010, 09953–05020, 09954–05021)

6. REMOVE STEERING COLUMN COVER

(a) Remove the 3 screws and steering column cover.

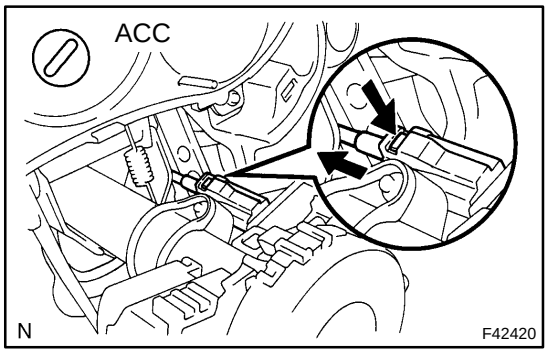

7. DISCONNECT FLOOR SHIFT PARKING LOCK CABLE ASSY (A/T TRANSAXLE)

(a) With the key in ACC, push the claw and pull out the floor shift parking lock cable.

8. REMOVE SPIRAL CABLE SUB–ASSY

9. REMOVE HEADLAMP DIMMER SWITCH ASSY

(a) Disconnect the connector and remove the headlamp dimmer switch assy.

10. REMOVE WINDSHIELD WIPER SWITCH ASSY

(a) Disconnect the connector and remove the windshield wiper switch assy.

11. REMOVE COLUMN HOLE COVER SILENCER SHEET

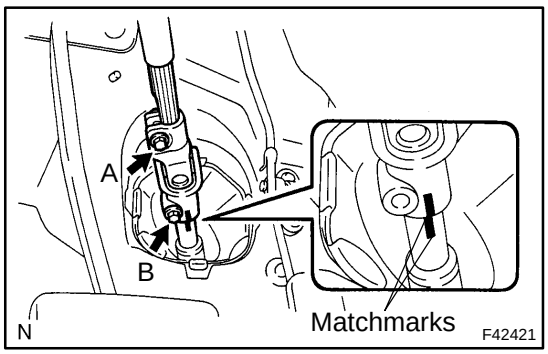

12. DISCONNECT STEERING INTERMEDIATE SHAFT

(a) Place matchmarks on the sliding yoke and steering intermediate shaft.

(b) Loosen the bolt A and remove the bolt B, then disconnect the steering intermediate shaft.

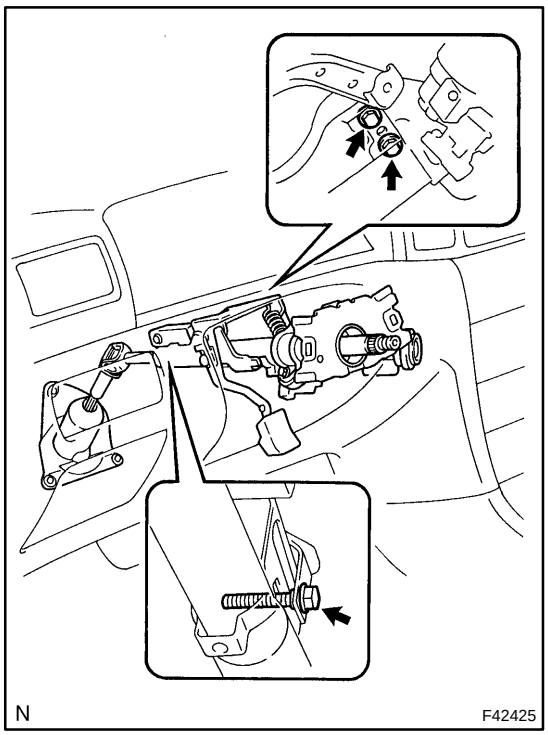

13. REMOVE STEERING COLUMN ASSY

(a) Disconnect the connectors and wire harness clamps from the steering column assy.

(b) Remove the 3 bolts and steering column assy.

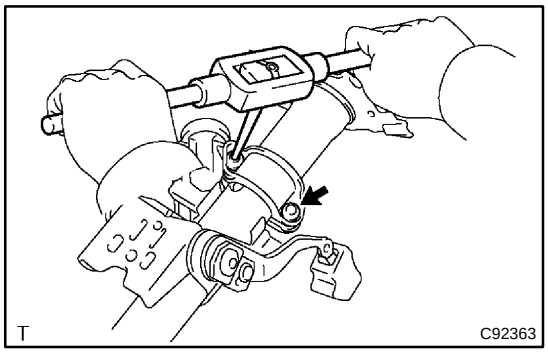

14. REMOVE STEERING COLUMN UPPER W/SWITCH BRACKET ASSY

(a) Using a centering punch, mark the center of the 2 tapered–head bolts.

(b) Using a 3 – 4 mm (0.12 – 0.16 in.) drill, drill into the 2 bolts.

(c) Using a screw extractor, remove the 2 bolts and steering column upper w/switch bracket assy.

15. REMOVE STEERING COLUMN CLAMP UPPER

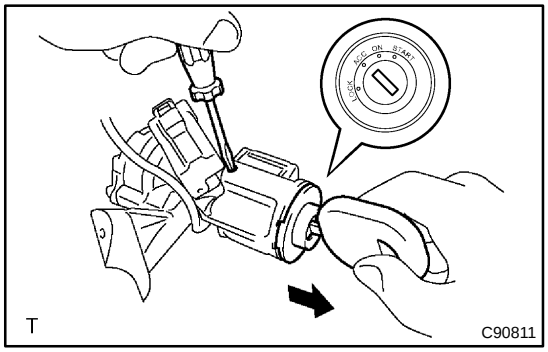

16. REMOVE IGNITION SWITCH LOCK CYLINDER ASSY

(a) Place the ignition switch lock cylinder assy at the ACC position.

(b) Push down the stop pin with a screwdriver, and pull out the cylinder assy.

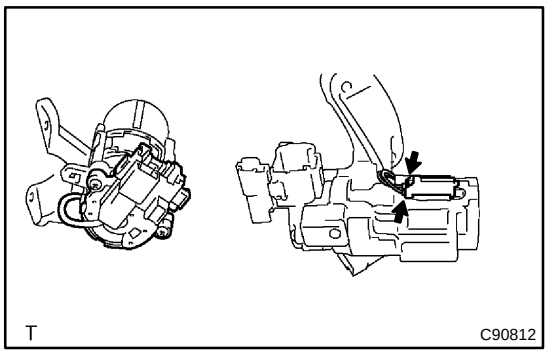

17. REMOVE UN–LOCK WARNING SWITCH ASSY

(a) Disconnect the un–lock warning switch assy connector from the ignition or starter switch assy.

(b) Remove the un–lock warning switch assy.

18. REMOVE IGNITION OR STARTER SWITCH ASSY

(a) Remove the 2 screws and ignition or starter switch assy from the steering column bracket assy.

19. INSTALL IGNITION OR STARTER SWITCH ASSY

(a) Install the ignition or starter switch assy to the steering column bracket assy with the 2 screws.

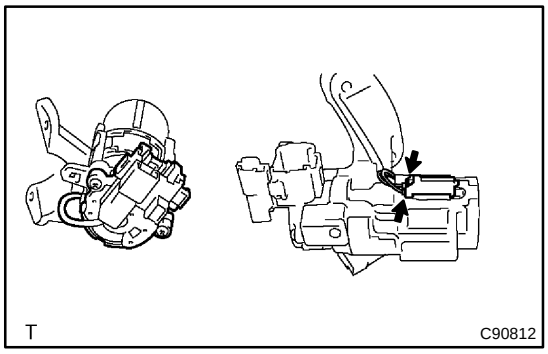

20. INSTALL UN–LOCK WARNING SWITCH ASSY

(a) Install the un–lock warning switch assy.

(b) Connect the un–lock warning switch assy connector to the ignition or starter switch assy.

21. INSTALL IGNITION SWITCH LOCK CYLINDER ASSY

(a) Make sure that the ignition switch lock cylinder assy is at the ACC position.

(b) Install the ignition switch lock cylinder assy.

22. INSPECT STEERING LOCK OPERATION

(a) Check that the steering lock mechanism is activated when removing the key.

(b) Check that the steering lock mechanism is deactivated when inserting the key and turning it to ACC position.

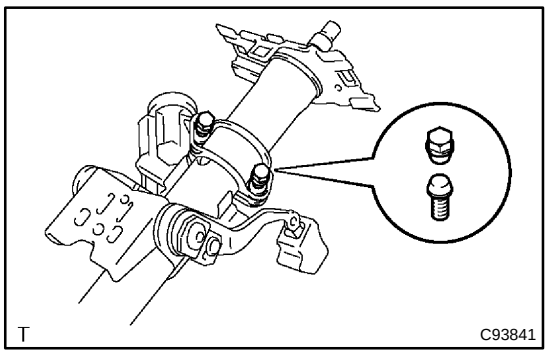

23. INSTALL STEERING COLUMN UPPER W/SWITCH BRACKET ASSY

(a) Temporarily install the steering column upper w/switch bracket assy and steering column upper clamp with 2 new tapered–head bolts.

(b) Tighten the 2 tapered–head bolts until the bolt heads break off.

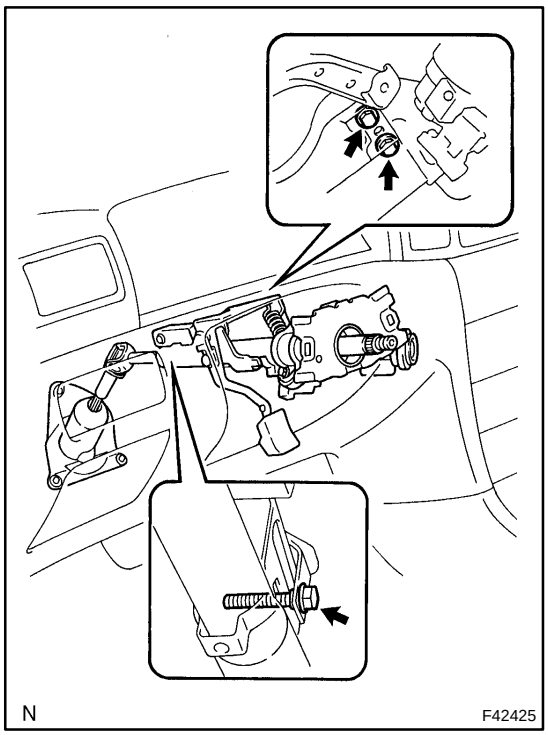

24. INSTALL STEERING COLUMN ASSY

(a) Install the steering column assy with the 3 bolts.
Torque: 21 N·m (210 kgf·cm, 15 ft·lbf)

(b) Connect the connectors and wire harness clamps.

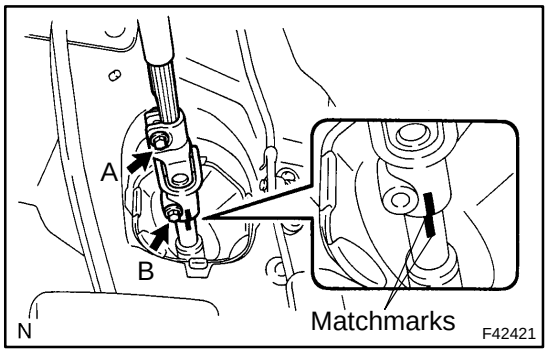

25. CONNECT STEERING INTERMEDIATE SHAFT

(a) Align the matchmarks on the sliding yoke and steering intermediate shaft.

(b) Install the bolt B and torque the bolt A.
Torque: 35 N·m (360 kgf·cm, 26 ft·lbf)

26. INSTALL COLUMN HOLE COVER SILENCER SHEET

27. INSTALL WINDSHIELD WIPER SWITCH ASSY

(a) Install the windshield wiper switch assy and connect the connector.

28. INSTALL HEADLAMP DIMMER SWITCH ASSY

(a) Install the headlamp dimmer switch assy and connect the connector.

29. PLACE FRONT WHEELS FACING STRAIGHT AHEAD

30. INSTALL SPIRAL CABLE SUB–ASSY

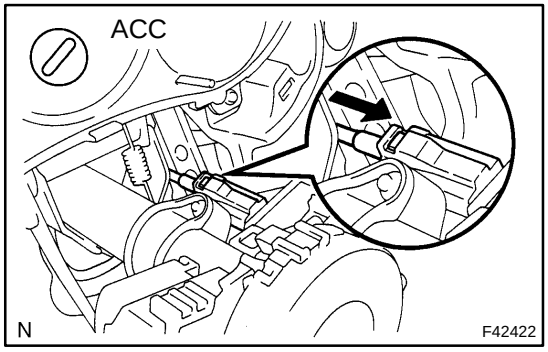

31. CONNECT FLOOR SHIFT PARKING LOCK CABLE ASSY (A/T TRANSAXLE)

(a) With the key in ACC, push into the floor shift parking lock cable and install it.

32. CONNECT CHECK KEY INTERLOCK OPERATION

33. INSTALL COVER SET STEERING COLUMN

(a) Install the steering column cover with the 3 screws.

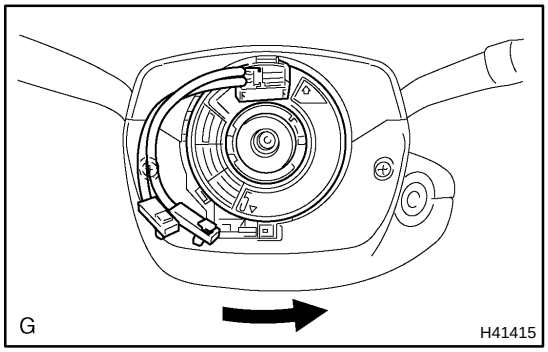

34. CENTER SPIRAL CABLE

(a) Check that the ignition switch is at OFF.

(b) Check that the battery negative terminal is disconnected.

NOTICE:

Do not start the operation for 90 seconds after removing the terminal.

(c) Turn the cable counterclockwise by hand until it becomes harder to turn.

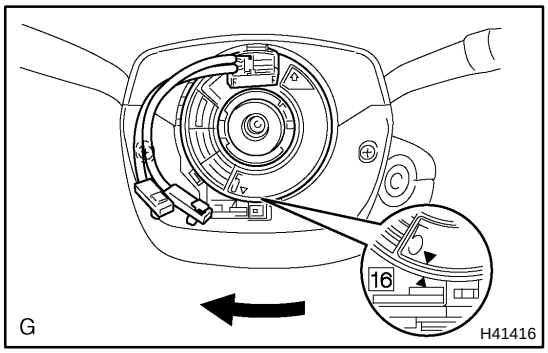

(d) Then rotate the cable clockwise about 2.5 turns to align the marks.

HINT:

The cable will rotate about 2.5 turns to either right or left of the center.

35. INSTALL STEERING WHEEL ASSY

(a) Align the matchmark with the one on the steering wheel assy and steering main shaft assy.

(b) Install the steering wheel assy with the set nut.

Torque: 50 N·m (510 kgf·cm, 37 ft·lbf)

(c) Connect the connector.

36. INSPECT HORN BUTTON ASSY (See page 60–8)

37. INSTALL HORN BUTTON ASSY

NOTICE:

- **Never use the airbag parts removed from another vehicle. When replacing parts, replace with new ones.**
- **Make sure that the horn button assy is installed to the specified torque.**
- **If the horn button assy has been dropped, or there are cracks, dents or other defects in the case or connector, replace the horn button assy with a new one.**
- **When installing the horn button assy, take care so that the wirings do not interfere with other parts and that they are not pinched between other parts.**

(a) Connect the 2 airbag connectors.
(b) Install the horn button assy after confirming that the circumference groove of the torx screws is caught on the screw case.

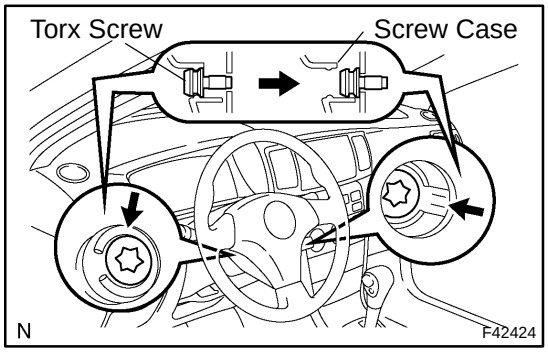

(c) Using a torx socket wrench, torque the 2 torx screws.
Torque: 8.8 N·m (90 kgf·cm, 78 in.·lbf)

38. STEERING WHEEL CENTER POINT

39. INSPECT SRS WARNING LIGHT (See page 05–424)

5002P–02

PROBLEM SYMPTOMS TABLE

Use the table below to help you find the cause of the problem. The numbers indicate the priority of the likely cause of the problem. Check each part in the order shown. If necessary, repair or replace these parts.

Symptom	Suspect Area	See page
Hard steering	1. Tires (Improperly inflated)	28–1
	2. Power steering fluid level (Low)	51–3
	3. Front wheel alignment (Incorrect)	26–5
	4. Steering system joints (Worn)	–
	5. Suspension arm ball joints (Worn)	26–17
	6. Steering column (Binding)	–
	7. Power steering vane pump	51–8
	8. Power steering gear	51–18
Poor return	1. Tires (Improperly inflated)	28–1
	2. Front wheel alignment (Incorrect)	26–5
	3. Steering column (Binding)	–
	4. Power steering gear	51–18
Excessive play	1. Steering system joints (Worn)	–
	2. Suspension arm ball joints (Worn)	26–17
	3. Intermediate shaft, Sliding yoke (Worn)	–
	4. Front wheel bearing (Worn)	30–17
	5. Power steering gear	51–18
Abnormal noise	1. Power steering fluid level (Low)	51–3
	2. Steering system joints (Worn)	–
	3. Power steering vane pump	51–8
	4. Power steering gear	51–18

5105M–02

ON–VEHICLE INSPECTION

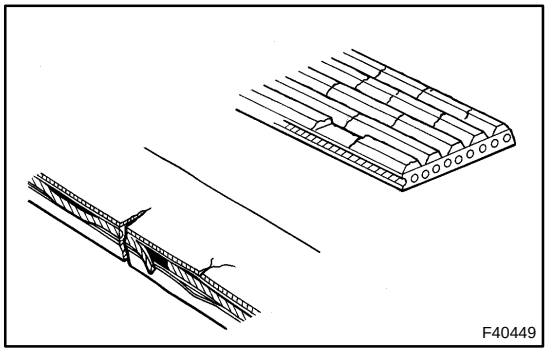

1. INSPECT DRIVE BELT

(a) Visually check the belt for excessive wear, frayed cords, etc.

If any defect is found, replace the drive belt.

HINT:

Cracks on the rib side of a belt are considered acceptable. If the missing chunks from the ribs are found on the belt, it should be replaced.

2. BLEED POWER STEERING SYSTEM

(a) Check the fluid level.

(b) Jack up the front of the vehicle and support it with the stands.

(c) Turn the steering wheel.

(1) With the engine stopped, turn the wheel slowly from lock to lock several times.

(d) Lower the vehicle.

(e) Start the engine.

(1) Run the engine at idle for a few minutes.

(f) Turn the steering wheel.

(1) With the engine idling, turn the wheel to left or right full lock position and keep it there for 2 – 3 seconds, then turn the wheel to the opposite full lock position and keep it there for 2 – 3 seconds.

(2) Repeat (1) several times.

(g) Stop the engine.

(h) Check for foaming or emulsification.

Especially, if the system has to be bled twice because of foaming or emulsification, check for fluid leaks in the system.

(i) Check the fluid level.

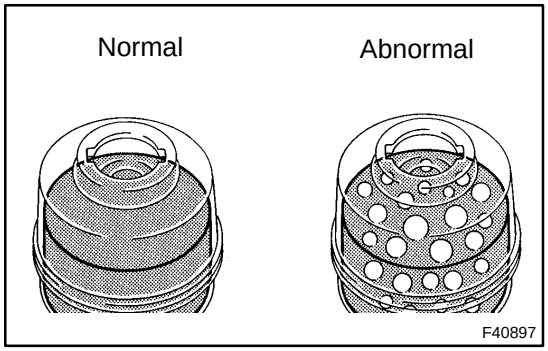

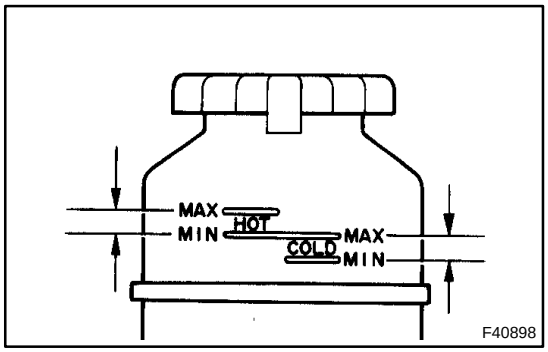

3. CHECK FLUID LEVEL

(a) Keep the vehicle level.

(b) With the engine stopped, check the fluid level in the oil reservoir.

If necessary, add fluid.

Fluid: ATF DEXRON® II or III

HINT:

Check that the fluid level is within the HOT LEVEL range on the reservoir tank. If the fluid is cold, check that it is within the COLD LEVEL range.

(c) Start the engine and run it at idle.
(d) Turn the steering wheel from lock to lock several times to raise fluid temperature.
Fluid temperature: 75 – 80˚C (167 – 176˚F)

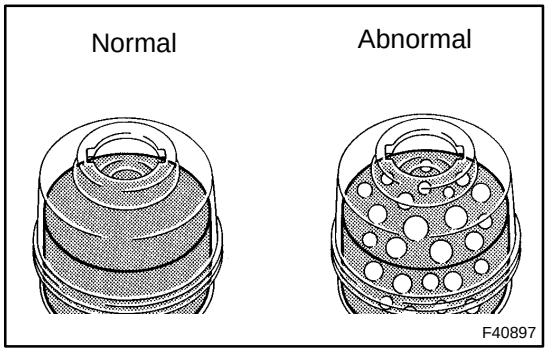

(e) Check for foaming or emulsification.
If foaming or emulsification is identified, bleed the power steering system.

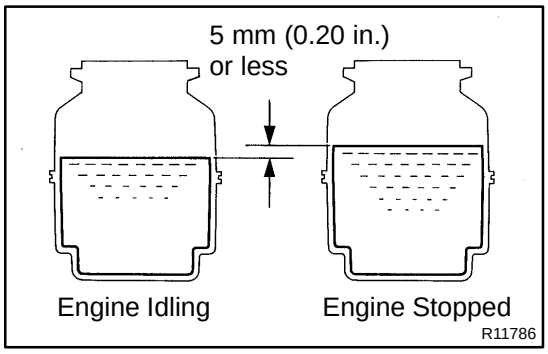

(f) With the engine idling, measure the fluid level in the oil reservoir.
(g) Stop the engine.
(h) Wait a few minutes and measure the fluid level in the oil reservoir again.
Maximum fluid level rise: 5 mm (0.20 in.)
If a problem is found, bleed the power steering system.
(i) Check the fluid level.

4. CHECK STEERING FLUID PRESSURE

(a) Disconnect the pressure feed tube from the PS gear (See page 51–18).
(b) Connect SST, as shown in the illustration.
SST 09640–10010 (09641–01010, 09641–01020, 09641–01030)

NOTICE:
Check that the valve of the SST is in the open position.

(c) Bleed the power steering system.
(d) Start the engine and run it at idle.
(e) Turn the steering wheel from lock to lock several times to raise fluid temperature.
Fluid temperature: 75 – 80 ˚C (167 – 176 ˚F)

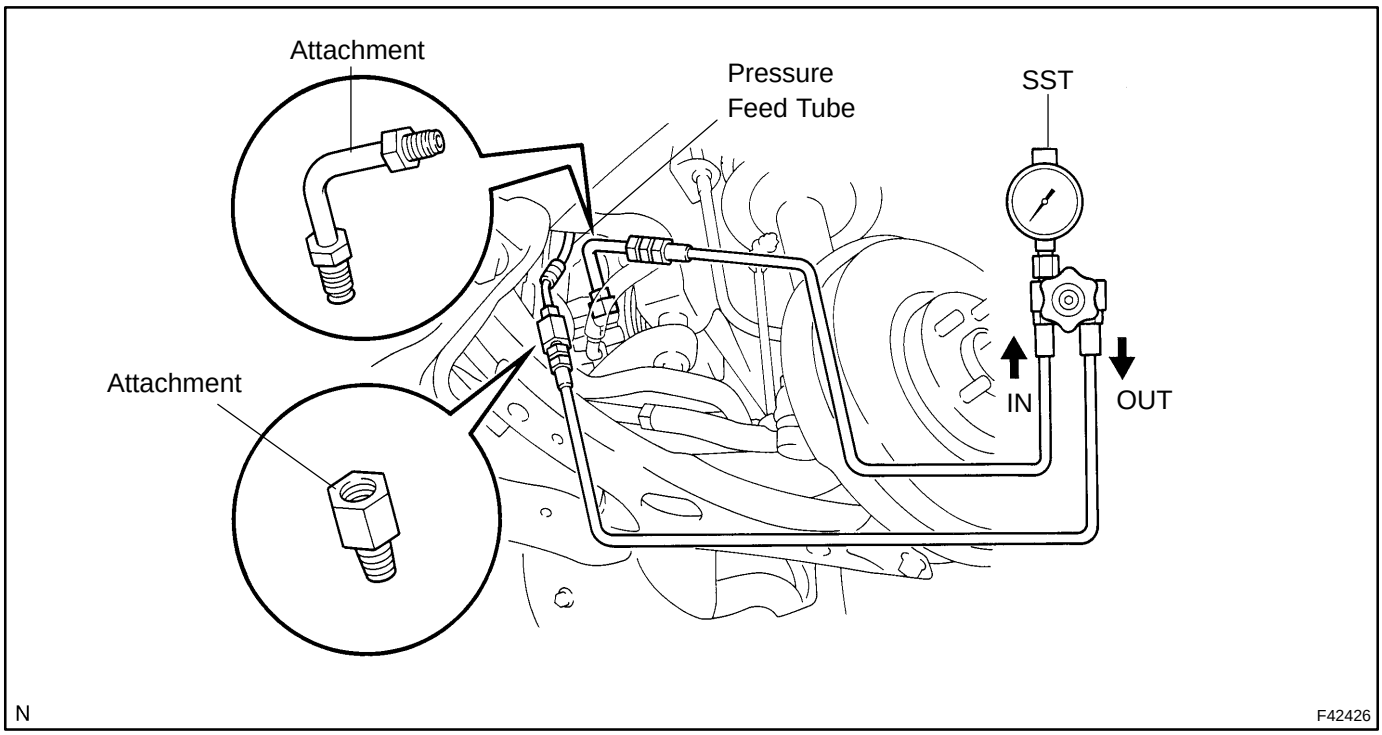

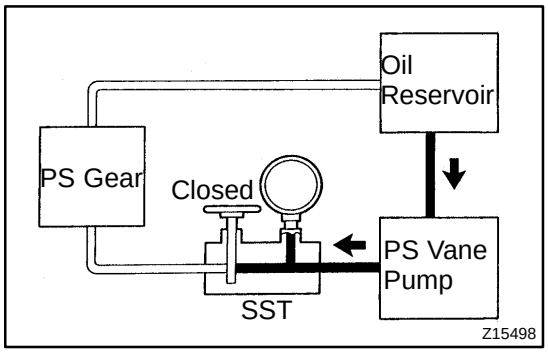

(f) With the engine idling, close the valve of the SST and observe the reading on the SST.

Fluid pressure:

7,300 – 7,800 kPa (75 – 80 kgf/cm^2, 1,067 – 1,138 psi)

NOTICE:

- **Do not keep the valve closed for more than 10 seconds.**
- **Do not let the fluid temperature become too high.**

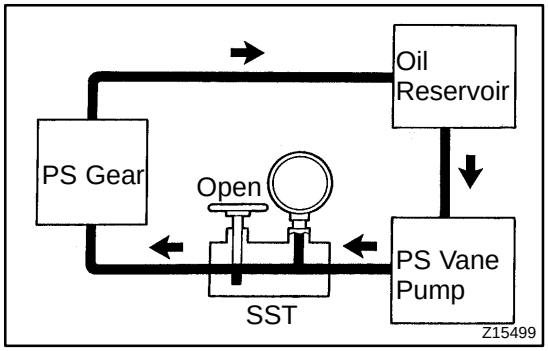

(g) With the engine idling, open the valve fully.

(h) Measure the fluid pressure at engine speeds of 1,000 rpm and 3,000 rpm.

Fluid pressure difference:

490 kPa (5 kgf/cm^2, 71 psi) or less

NOTICE:

Do not turn the steering wheel.

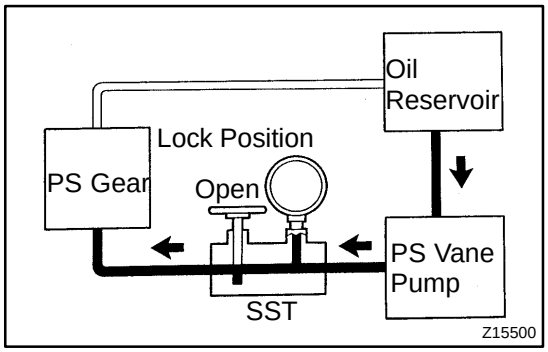

(i) With the engine idling and valve fully opened, turn the steering wheel to full lock position.

Fluid pressure:

7,300 – 7,800 kPa (75 – 80 kgf/cm^2, 1,067 – 1,138 psi)

NOTICE:

- **Do not maintain lock position for more than 10 seconds.**
- **Do not let the fluid temperature become too high.**

(j) Disconnect the SST.
SST 09640–10010 (09641–01010, 09641–01020, 09641–01030)
(k) Connect the pressure feed tube to the PS gear (See page 51–18).
(l) Bleed the power steering system.

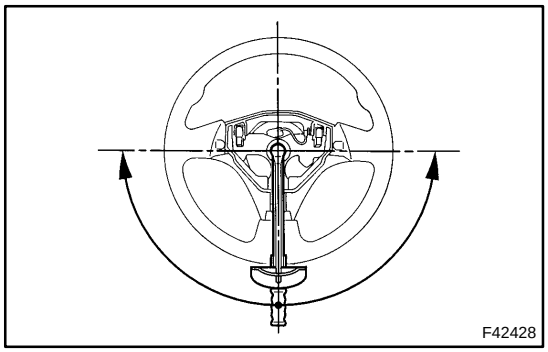

5. CHECK STEERING EFFORT

(a) Center the steering wheel assy.
(b) Remove the horn button assy (See page 50–8).
(c) Start the engine and run it at idle.
(d) Measure the steering effort in both directions.
Steering effort (Reference):
6 N·m (60 kgf·cm, 53 in.·lbf) or less

HINT:
Take the tire type, pressure and contact surface into consideration before making your diagnosis.

(e) Install the steering wheel assy set nut.
Torque: 50 N·m (510 kgf·cm, 37 ft·lbf)
(f) Install the horn button assy (See page 50–8).

POWER STEERING SYSTEM

5107U–01

PRECAUTION

1. HANDLING PRECAUTIONS ON SRS AIRBAG SYSTEM

(a) The vehicle is equipped with SRS (Supplemental Restraint System) such as the driver airbag and front passenger airbag. Failure to carry out service operation in correct sequence could cause the SRS to unexpectedly deploy during servicing, possibly leading to a serious accident. Before servicing (including removal or installation of parts, inspection or replacement), be sure to read the precautionary notice for the supplemental restraint system (See page 60–1).

RACK & PINION POWER STEERING GEAR ASSY

COMPONENTS

5107X–01

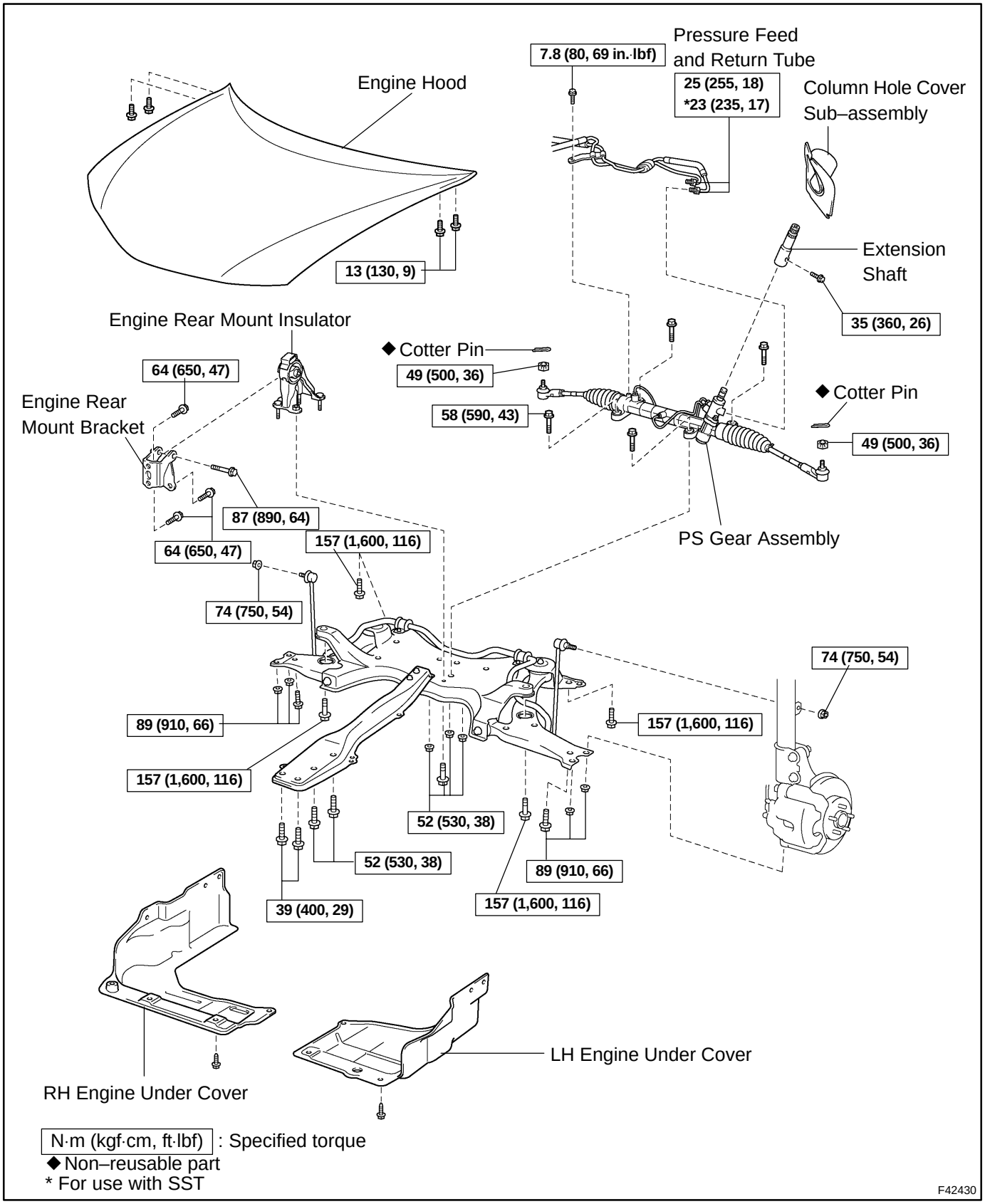

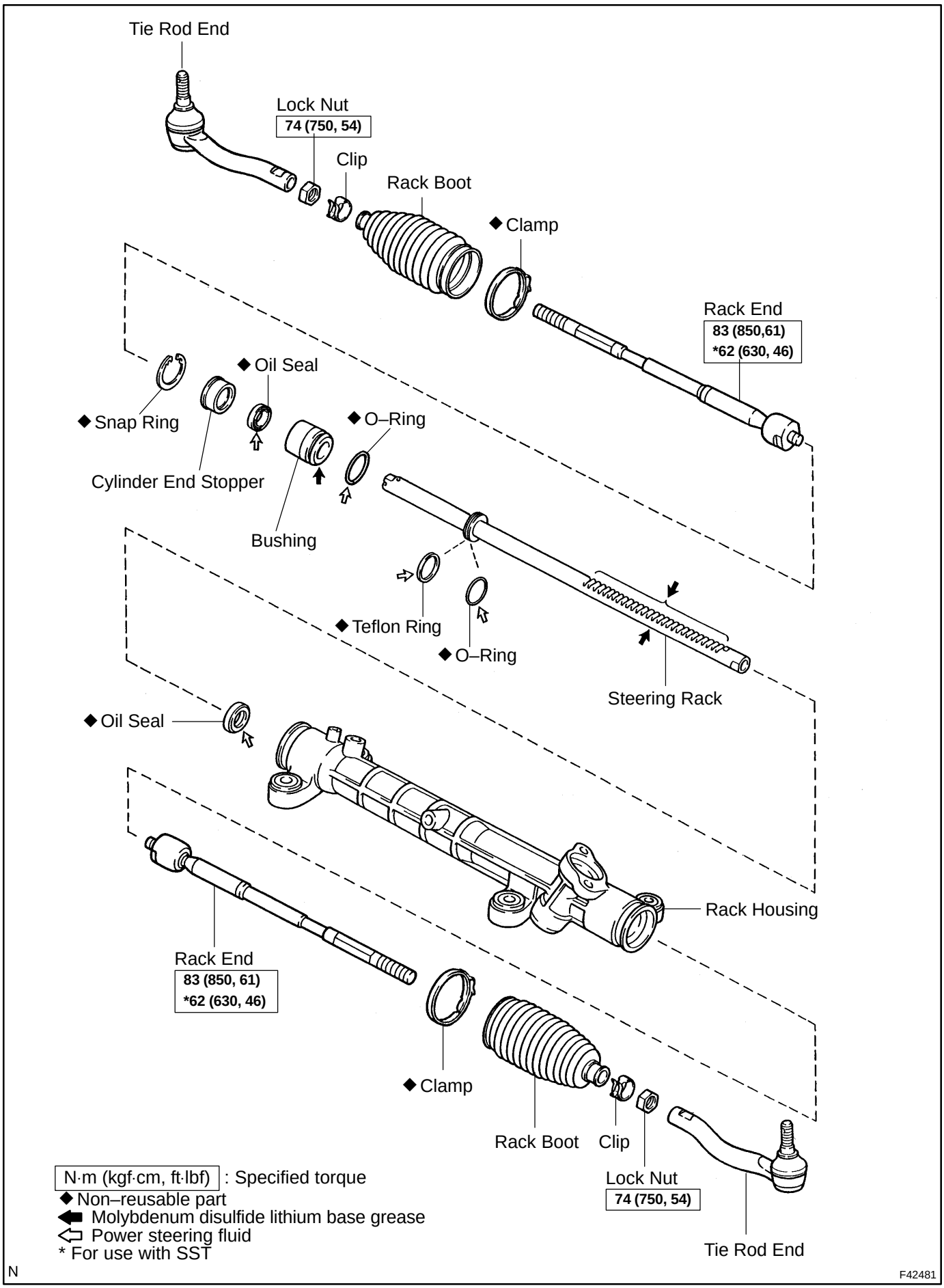
Tie Rod End
Lock Nut
74 (750, 54)
Clip
Rack Boot
◆Clamp
Rack End
83 (850,61)
*62 (630, 46)
◆Oil Seal
◆Snap Ring
◆O–Ring
Cylinder End Stopper
Bushing
◆Teflon Ring
◆O–Ring
Steering Rack
◆Oil Seal
Rack Housing
Rack End
83 (850, 61)
*62 (630, 46)
◆Clamp
Rack Boot
Clip
Lock Nut
74 (750, 54)
Tie Rod End
N·m (kgf·cm, ft·lbf) : Specified torque
◆Non–reusable part
Molybdenum disulfide lithium base grease
Power steering fluid
* For use with SST
N
F42481

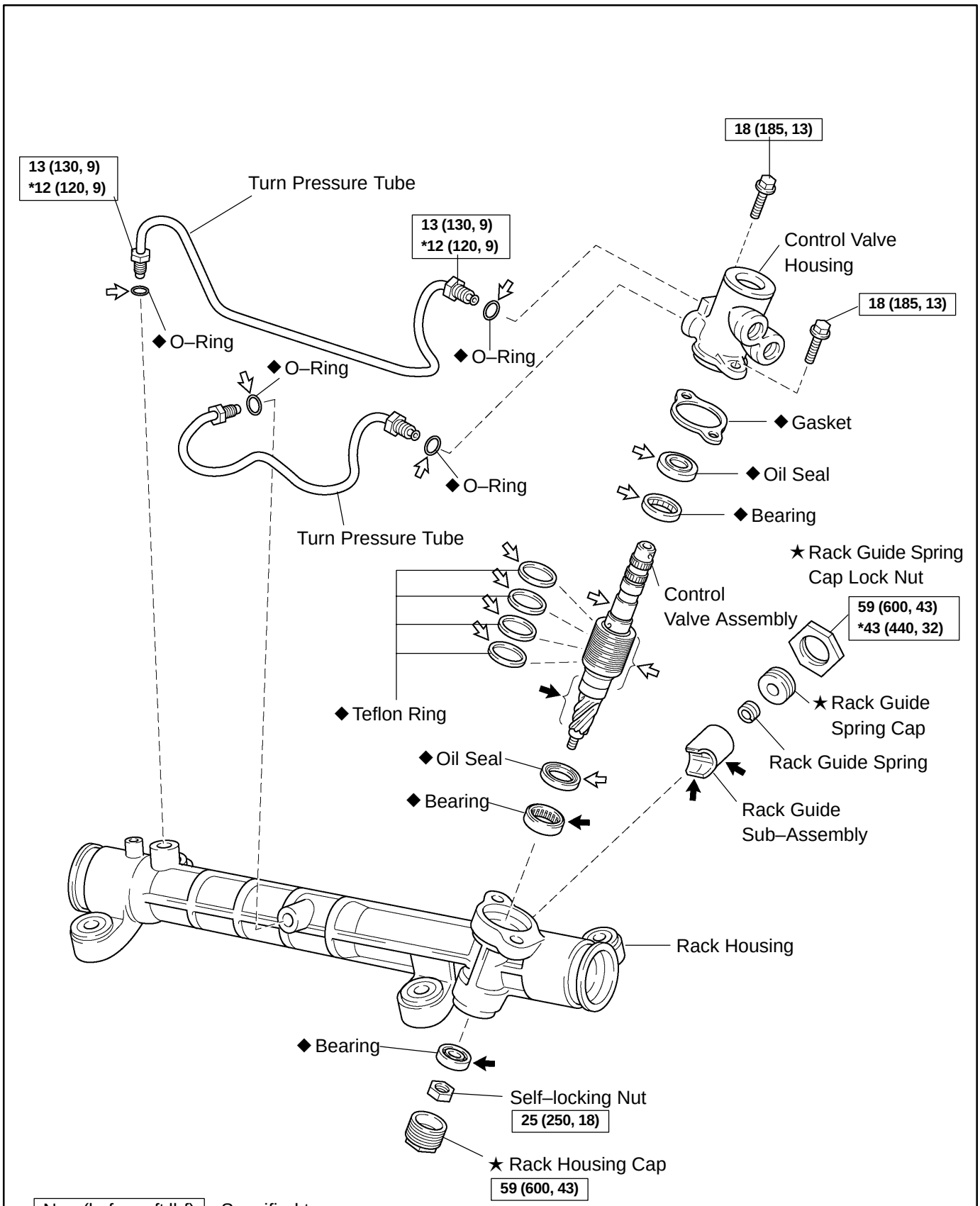
18 (185, 13)
13 (130, 9)
*12 (120, 9)
Turn Pressure Tube
13 (130, 9)
*12 (120, 9)
Control Valve
Housing
18 (185, 13)
◆ O–Ring
◆ O–Ring
◆ O–Ring
◆ Gasket
◆ Oil Seal
◆ Bearing
Turn Pressure Tube
★ Rack Guide Spring
Cap Lock Nut
Control
Valve Assembly
59 (600, 43)
*43 (440, 32)
◆ Teflon Ring
★ Rack Guide
Spring Cap
Rack Guide Spring
◆ Oil Seal
◆ Bearing
Rack Guide
Sub–Assembly
Rack Housing
◆ Bearing
Self–locking Nut
25 (250, 18)
★ Rack Housing Cap
59 (600, 43)
N·m (kgf·cm, ft·lbf) : Specified torque
◆ Non–reusable part
★ Precoated part
Molybdenum disulfide lithium base grease
Power steering fluid
* For use with SST
N
F42432

5107Y–02

OVERHAUL

NOTICE:

When installing, coat the parts indicated by the arrow with power steering fluid or molybdenum disulfide lithium base grease(See page 51–15).

1. **PRECAUTION(See page 60–1)**
2. **DISCONNECT BATTERY NEGATIVE TERMINAL**
3. **INSPECT CENTER FRONT WHEEL**
4. **REMOVE HORN BUTTON ASSY(See page 50–8)**
5. **REMOVE STEERING WHEEL ASSY(See page 50–8)**
   SST 09950–50013 (09951–05010, 09952–05010, 09953–05020, 09954–05021)
6. **REMOVE FRONT WHEELS**
7. **REMOVE ENGINE UNDER COVER LH**
8. **REMOVE ENGINE UNDER COVER RH**

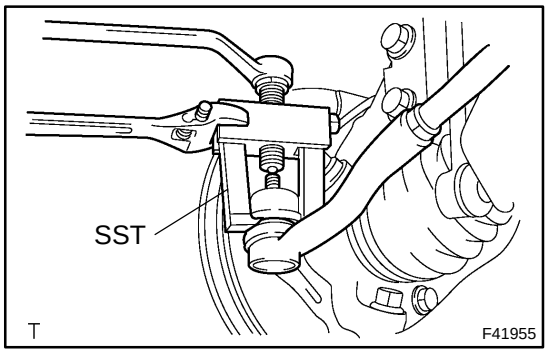

9. **DISCONNECT TIE ROD END SUB–ASSY LH**
   (a) Remove the cotter pin and nut.
   (b) Using SST, disconnect tie rod end sub–assy LH from the steering knuckle.
   SST 09628–62011

10. **DISCONNECT TIE ROD END SUB–ASSY RH**
    SST 09628–62011

HINT:

Remove the RH side by the same procedures as of the LH side.

11. **REMOVE COLUMN HOLE COVER SILENCER SHEET**
12. **DISCONNECT STEERING INTERMEDIATE SHAFT(See page 50–8)**

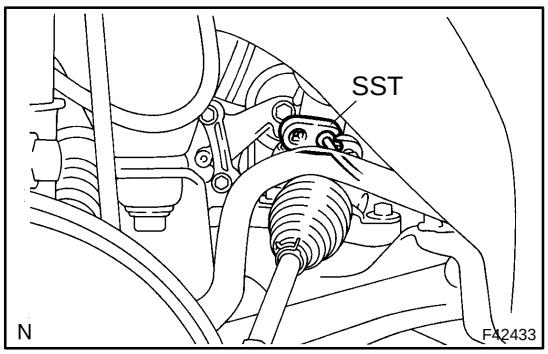

13. **DISCONNECT PRESSURE FEED TUBE ASSY**
    (a) Using SST, disconnect the pressure feed tube assy.
    SST 09023–38400

14. DISCONNECT RETURN TUBE SUB–ASSY

(a) Using SST, disconnect the return tube sub–assy.
SST 09023–38400

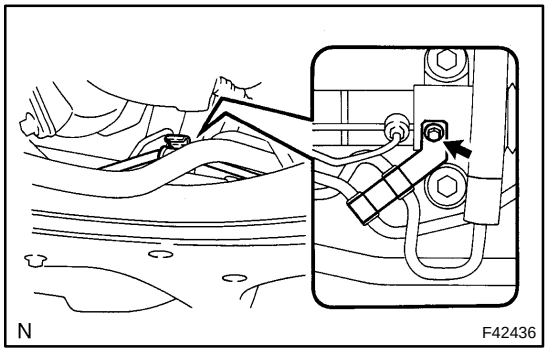

(b) Remove the bolt and disconnect the tube clamp.

15. DISCONNECT FRONT STABILIZER LINK ASSY LH

(a) Remove the nut and disconnect the front stabilizer link assy LH.

16. DISCONNECT FRONT STABILIZER LINK ASSY RH

HINT:
Remove the RH side by the same procedures as the LH side.

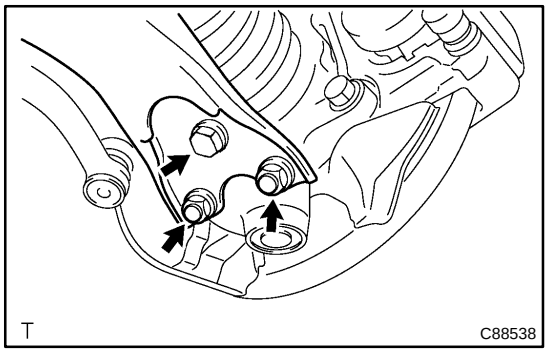

17. DISCONNECT FRONT SUSPENSION ARM SUB–ASSY LOWER NO.1 LH

(a) Remove the bolt and 2 nuts and disconnect the front suspension arm sub–assy lower No.1 LH from the lower ball joint.

18. DISCONNECT FRONT SUSPENSION ARM SUB–ASSY LOWER NO.1 RH

HINT:
Remove the RH side by the same procedures as the LH side.

19. REMOVE HOOD SUB–ASSY

20. REMOVE CYLINDER HEAD COVER NO.2

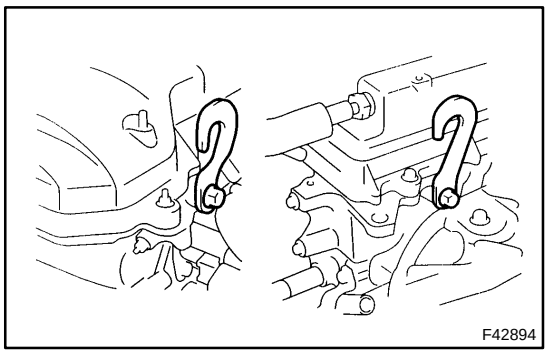

21. SUSPEND ENGINE ASSEMBLY

(a) Install the 2 engine hangers with the bolts in the correct direction.

Parts No.:
No.1 engine hanger: 12281 – 22021
No.2 engine hanger: 12281 – 15040
Bolt: 91512 – B1016
Torque:
38 N·m (390 kgf·cm, 28 ft·lbf)

(b) Attach the engine chain hoist to the engine hangers.

CAUTION:
Do not attempt to hang the engine by hooking the chain to any other parts.

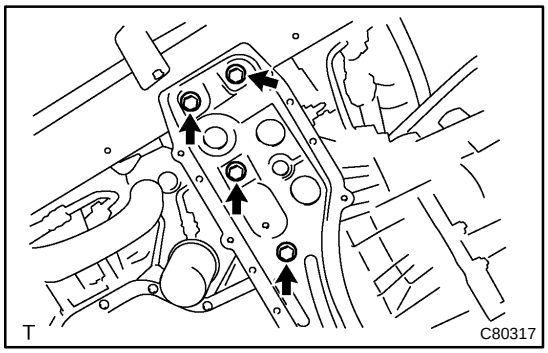

22. REMOVE FRONT SUSPENSION CROSSMEMBER SUB–ASSY

(a) Remove the 2 bolts and disconnect the center member from the engine mounting insulator FR.

(b) Remove the 2 bolts and disconnect the center member from the frame.

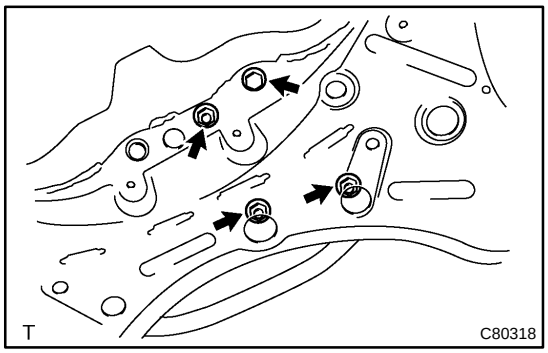

(c) Remove the bolt and 3 nuts, disconnect the engine mounting insulator RR from the crossmember.

(d) Using a transmission jack, support the crossmember.

(e) Remove the 4 bolts and front suspension crossmember sub–assy with the steering gear assy.

23. REMOVE STEERING COLUMN HOLE COVER SUB–ASSY NO.1

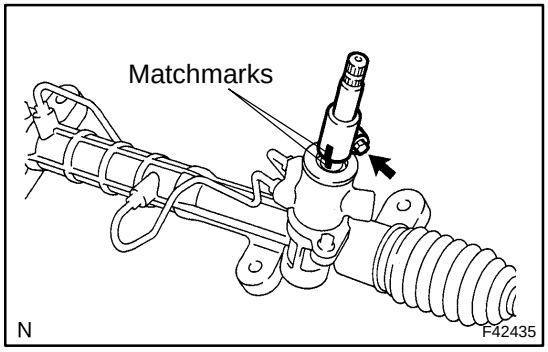

24. REMOVE STEERING INTERMEDIATE SHAFT

(a) Place matchmarks on the intermediate shaft with control valve.

(b) Remove the bolt and steering intermediate shaft.

25. REMOVE RACK & PINION POWER STEERING GEAR ASSY

(a) Remove the 4 bolts and rack & pinion power steering gear assy from the crossmember.

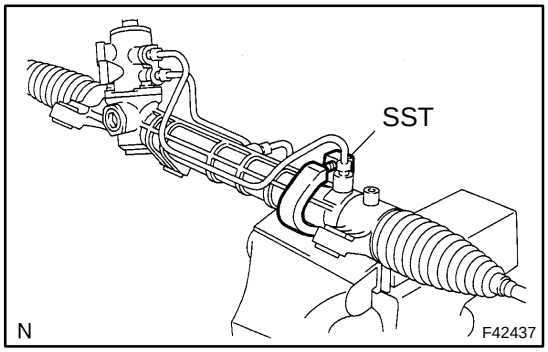

26. FIX RACK & PINION POWER STEERING GEAR ASSY

(a) Using SST, secure the rack & pinion power steering gear assy in a vise.
SST 09612–00012

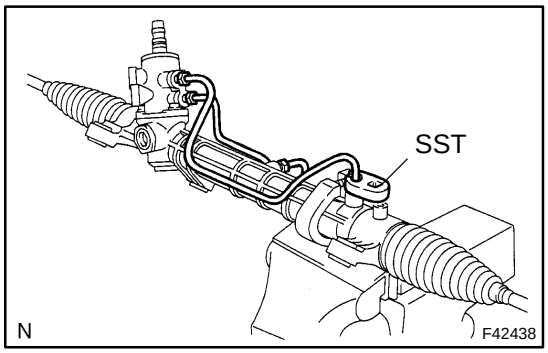

27. REMOVE STEERING LEFT TURN PRESSURE TUBE

(a) Using SST, remove the left turn pressure tube.
SST 09023–38200

(b) Remove the 2 O–rings from the left turn pressure tube.

28. REMOVE STEERING RIGHT TURN PRESSURE TUBE

(a) Using SST, remove the right turn pressure tube.
SST 09023–38200

(b) Remove the 2 O–rings from the right turn pressure tube.

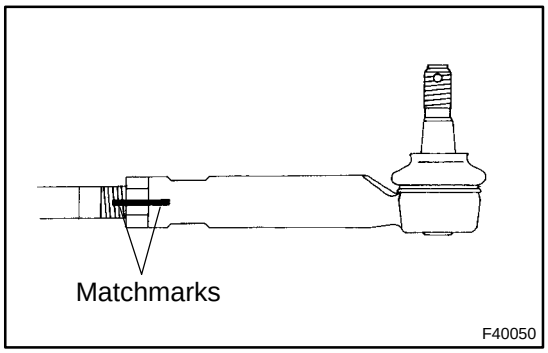

29. REMOVE TIE ROD END SUB–ASSY LH

(a) Place matchmarks on the tie rod end with rack end.

(b) Loosen the lock nut, and remove the tie rod end and lock nut.

30. REMOVE TIE ROD END SUB–ASSY RH

HINT:

Remove the RH side by the same procedures as the LH side.

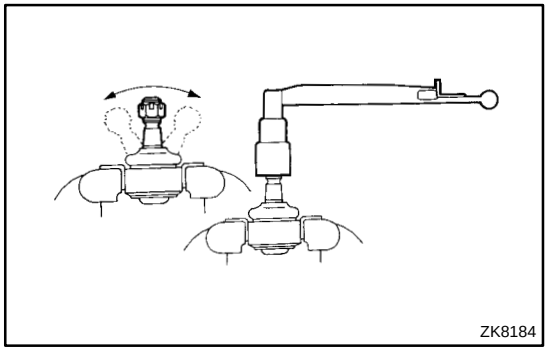

31. INSPECT TIE ROD END SUB–ASSY LH

(a) Secure the tie rod end LH in a vise.

(b) Install the nut to the stud bolt.

(c) Flip the ball joint stud back and forth 5 times.

(d) Using a torx wrench, turn the nut continuously at a rate of 2 – 4 seconds per 1 turn and take the torque reading of the 5th turn.
Turning torque:
0.49 – 3.43 N·m (5.0 – 35 kgf·cm, 4.34 – 30.38 in.·lbf)

32. INSPECT TIE ROD END SUB–ASSY RH

HINT:

Inspect the RH side by the same procedures as the LH side.

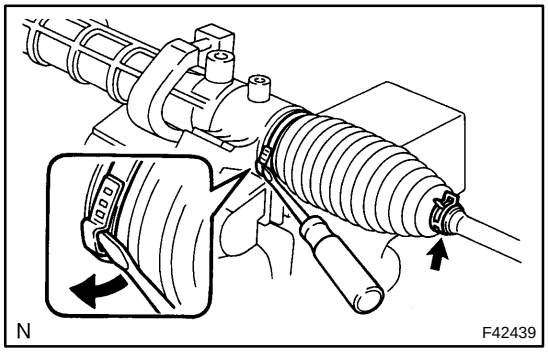

33. REMOVE STEERING RACK BOOT NO.1

(a) Remove the steering rack boot clip.

(b) Using a screwdriver, remove the clamp and steering rack boot No.1.

34. REMOVE STEERING RACK BOOT NO.2

HINT:

Remove the steering rack boot No.2 by same procedures as the No.1.

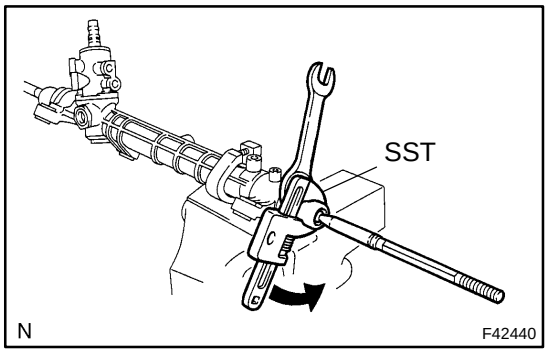

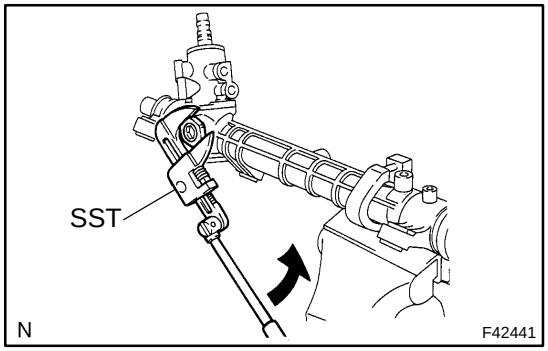

35. REMOVE STEERING RACK END SUB–ASSY

(a) Using a spanner, hold the steering rack steadily and using SST, remove the rack end.

SST 09922–10010

NOTICE:

Use SST 09922–10010 in the direction shown in the illustration.

HINT:

Mark the RH and LH rack ends.

(b) Use the same manner described above to the other side.

36. REMOVE RACK GUIDE

(a) Using SST, remove the rack guide spring cap nut.

SST 09922–10010

NOTICE:

Use SST 09922–10010 in the direction shown in the illustration.

(b) Using a hexagon wrench (19 mm), remove the rack guide spring cap.

(c) Remove the conical spring, rack guide spring and rack guide.

37. REMOVE POWER STEERING CONTROL VALVE

(a) Remove the rack housing cap.

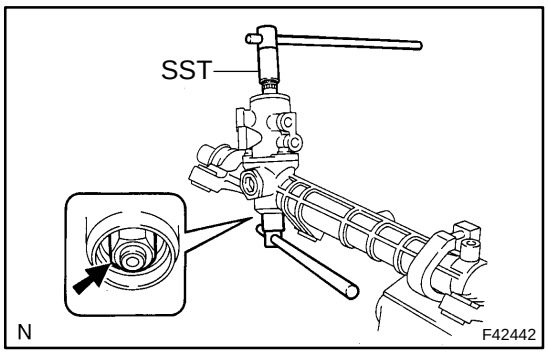

(b) Using SST, hold the control valve shaft and remove the self–locking nut.
SST 09616–00011

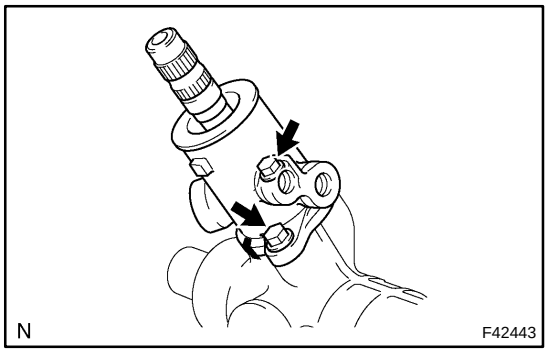

(c) Remove the 2 bolts and power steering control valve.
(d) Remove the gasket.

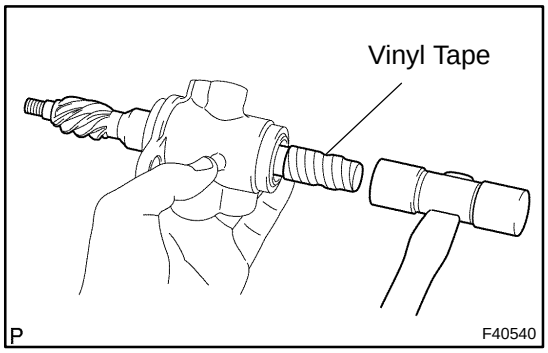

(e) To prevent oil seal lip damage, wind vinyl tape around the serrated part of the control valve.
(f) Using a plastic hammer, remove the control valve with oil seal from the control valve housing.
(g) Remove the oil seal from the control valve.

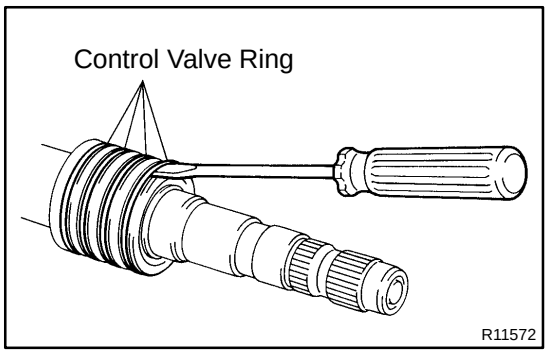

(h) Using a screwdriver, remove the 4 control valve rings.

NOTICE:

Be careful not to damage the grooves for the control valve ring.

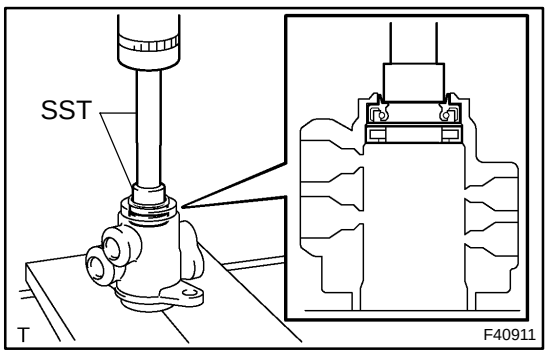

38. REMOVE POWER STEERING CONTROL VALVE UPPER OIL SEAL

(a) Using SST and a press, remove the control valve upper bearing and upper oil seal from the control valve housing.
SST 09950–60010 (09951–00260), 09950–70010 (09951–07150)

39. REMOVE CYLINDER END STOPPER

(a) Using snap ring pliers, remove the snap ring.
(b) Pull out the cylinder end stopper.

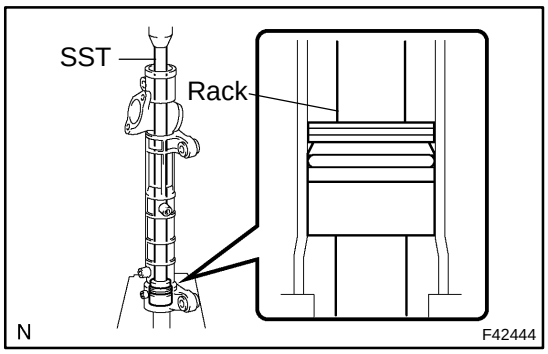

40. REMOVE POWER STEERING RACK

(a) Using SST and a press, remove the steering rack with the bushing.
SST 09612–24014 (09612–10061)

NOTICE:

Take care not to drop the steering rack.

(b) Remove the O–ring from the bushing.

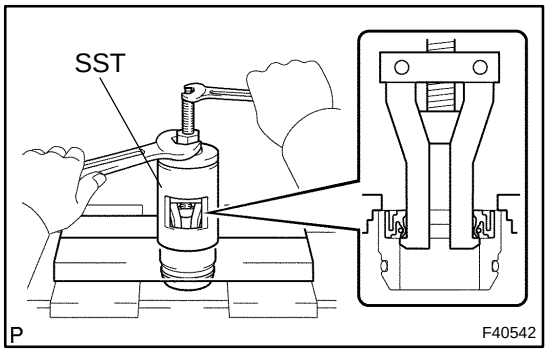

41. REMOVE POWER STEERING RACK BUSH SUB–ASSY

(a) Remove the power steering rack bush from the power steering rack.

(b) Using SST, remove the rack bush oil seal.
SST 09612–24014 (09613–22011)

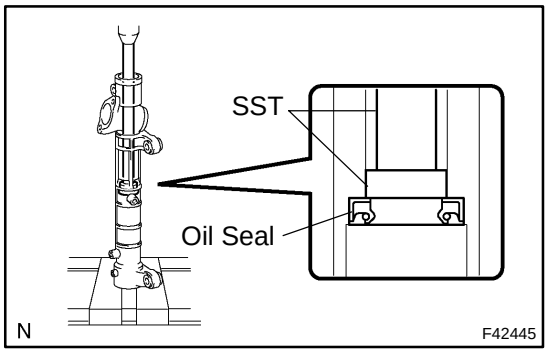

42. REMOVE POWER STEERING CYLINDER TUBE OIL SEAL

(a) Using SST and a press, remove the power steering cylinder tube oil seal.
SST 09950–60010 (09951–00260), 09950–70010 (09951–07360)

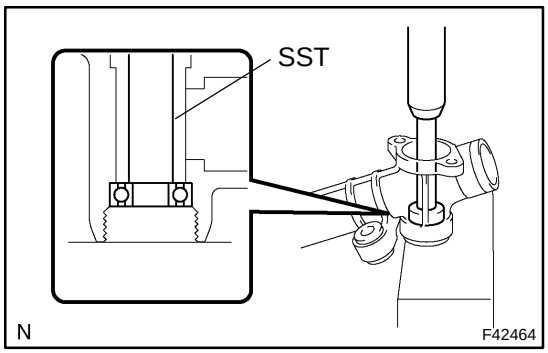

43. REMOVE POWER STEERING CONTROL VALVE LOWER BEARING

(a) Using SST and a press, remove the power steering control valve lower bearing.
SST 09950–70010 (09951–07100)

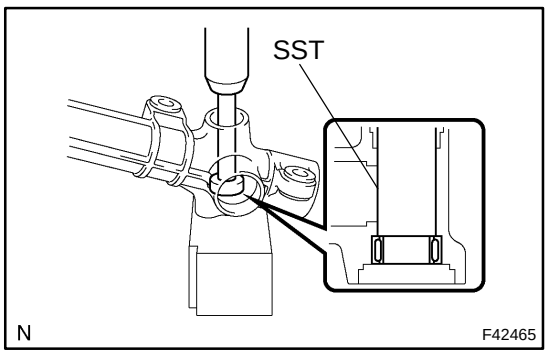

(b) Using SST and a press, remove the power steering control valve center bearing.
SST 09950–70010 (09951–07100)

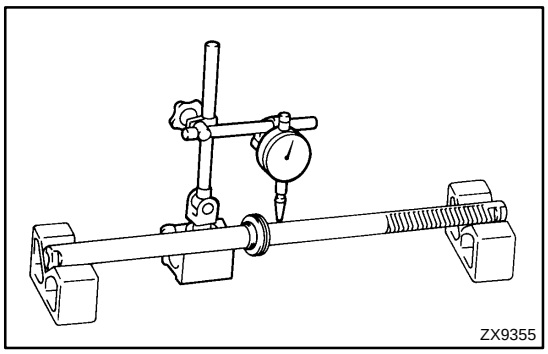

44. INSPECT POWER STEERING RACK

(a) Using a screwdriver, remove the O–ring from the power steering rack bush sub–assy.

(b) Using a dial indicator, check the steering rack for run out and for teeth wear and damage.

Maximum run out: 0.1 mm (0.004 in.)

(c) Check the back surface for wear and damage.

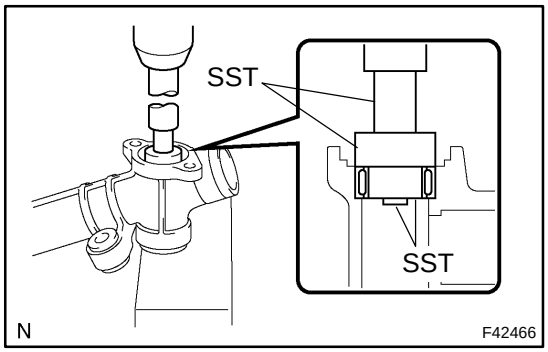

45. INSTALL POWER STEERING CONTROL VALVE LOWER BEARING

(a) Coat a new bearing with molybdenum disulfide lithium base grease.

(b) Using SST and a press, install the control valve center bearing.

SST 09950–60010 (09951–00220, 09951–00280, 09952–06010), 09950–70010 (09951–07100)

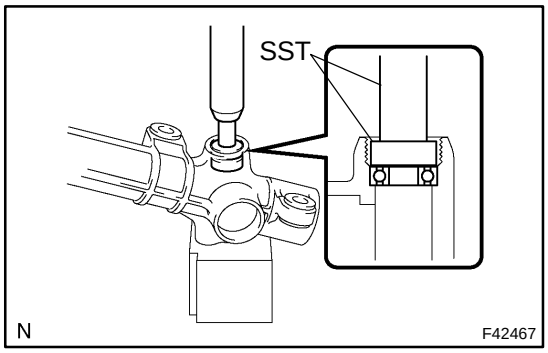

(c) Coat a new bearing with molybdenum disulfide lithium base grease.

(d) Using SST and a press, install the control valve lower bearing.

SST 09950–60010 (09951–00280), 09950–70010 (09951–07100)

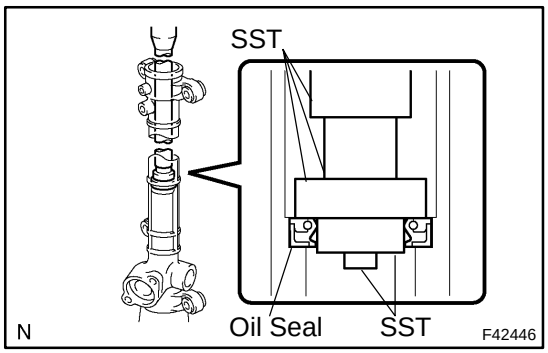

46. INSTALL POWER STEERING CYLINDER TUBE OIL SEAL

(a) Coat a new power steering cylinder tube oil seal lip with power steering fluid.

(b) Using SST and a press, install the power steering cylinder tube oil seal.

SST 09950–60010 (09951–00240, 09951–00400, 09952–06010), 09950–70010 (09951–07360)

NOTICE:

- **Make sure that the power steering cylinder tube oil seal is installed facing in the correct direction.**
- **Take care so that the power steering cylinder tube oil seal will not be reversed when you install it.**

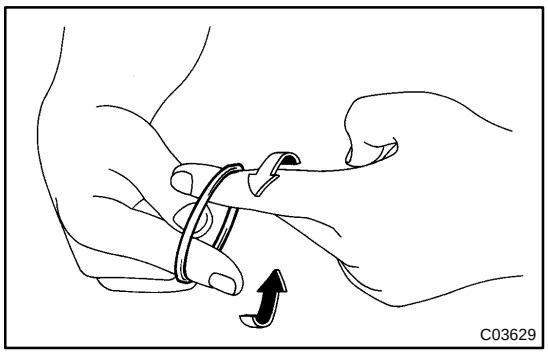

47. INSTALL POWER STEERING RACK

(a) Coat a new power piston O–ring with power steering fluid and install it to the steering rack.

(b) Coat a new power piston oil seal with power steering fluid.

(c) Expand the power piston oil seal with your fingers.

NOTICE:

Be careful not to expand the power piston oil seal excessively.

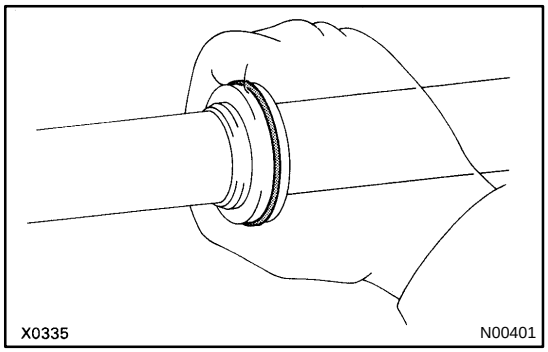

(d) Install the power piston oil seal to the steering rack, and settle it down with your fingers.
SST 09631–16020

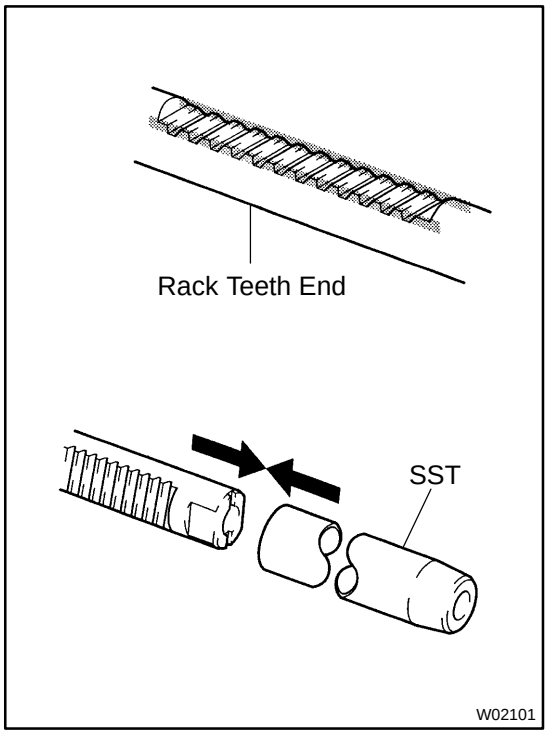

(e) Install SST to the steering rack.
SST 09631–16020

HINT:

If necessary, scrape the burrs off the steering rack teeth end and burnish.

(f) Coat the SST with power steering fluid.

(g) Install the steering rack into the rack housing.

(h) Remove the SST.
SST 09631–16020

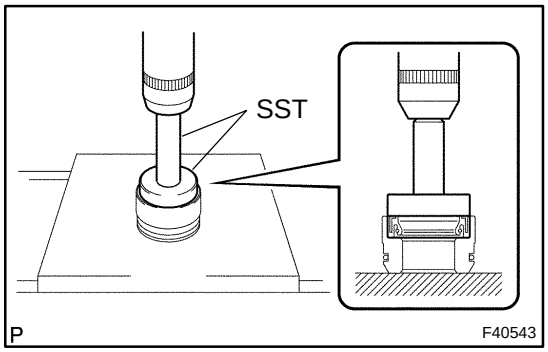

48. INSTALL POWER STEERING RACK BUSH SUB–ASSY

(a) Using SST and a press, install the rack bush oil seal to the power steering rack bush.
SST 09950–60010 (09951–00400), 09950–70010 (09951–07100)

NOTICE:

Make sure that the rack bush oil seal is installed facing in the correct direction.

(b) Coat a new O–ring with power steering fluid and install it to the power steering rack bush.

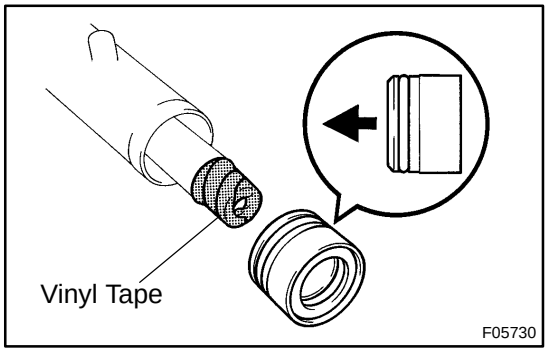

(c) To prevent rack bush oil seal lip damage, wind vinyl tape around the steering rack end, and apply power steering fluid.
(d) Install the rack bush to the steering rack.

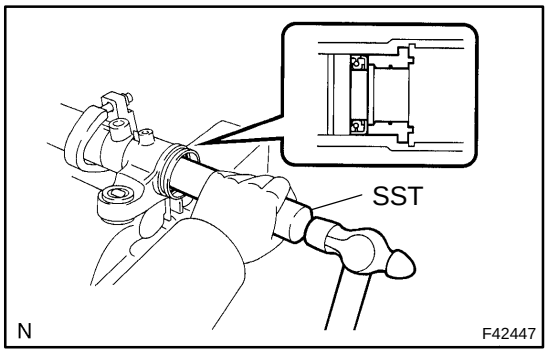

49. INSTALL CYLINDER END STOPPER

(a) Using SST and a hammer, drive in the cylinder end stopper.
SST 09612–22011
(b) Using snap ring pliers, install a new snap ring to the rack housing.

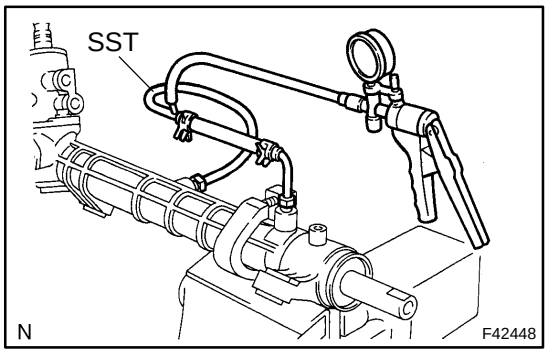

50. INSPECT RACK & PINION POWER STEERING GEAR ASSY

(a) Install SST to the rack housing.
SST 09631–12071 (09633–00010)
(b) Apply vacuum of 53 kPa (400 mmHg, 15.75 in. Hg) for about 30 seconds.
(c) Check that there is no change in the vacuum.

If there is a change in the vacuum, check the installation of the oil seals.

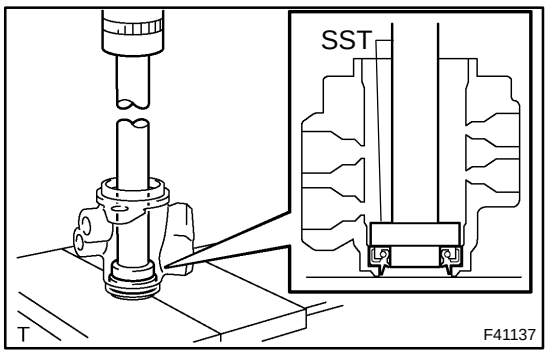

51. INSTALL POWER STEERING CONTROL VALVE UPPER OIL SEAL

(a) Coat an upper bearing and a new upper oil seal with power steering fluid.
(b) Using SST and a press, install the upper oil seal.
SST 09950–60010 (09951–00180, 09951–00320, 09952–06010), 09950–70010 (09951–07100)

NOTICE:
Make sure that the oil seal is installed facing in the correct direction.

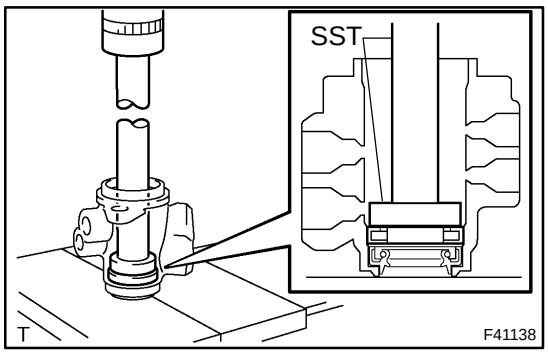

(c) Using SST and a press, install the upper bearing.
SST 09950–60010 (09951–00190, 09951–00360, 09952–06010), 09950–70010 (09951–07100)

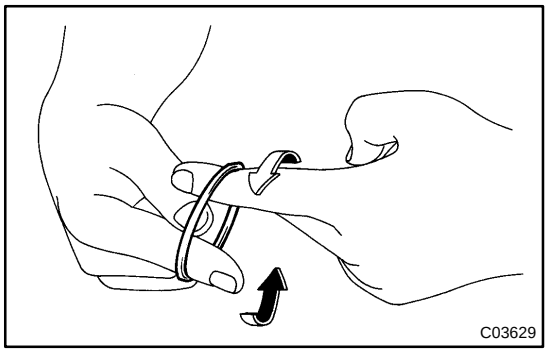

52. INSTALL POWER STEERING CONTROL VALVE

(a) Expand 4 new control valve rings with your fingers.

NOTICE:

Be careful not to over expand the valve ring.

(b) Coat the 4 control valve rings with power steering fluid.

(c) Install the 4 control valve rings to the control valve, and settle them down with your fingers.

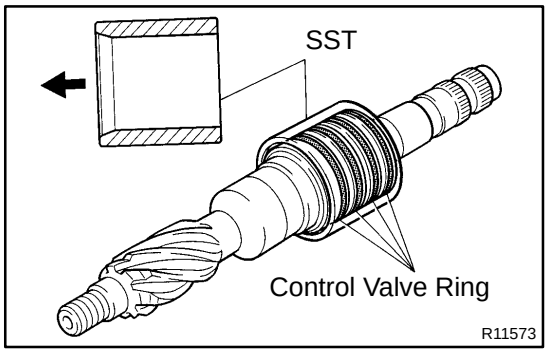

(d) Carefully slide the tapered end of SST over the control valve rings until they fit to the control valve.
SST 09631–20081

NOTICE:

Be careful not to damage the control valve rings.

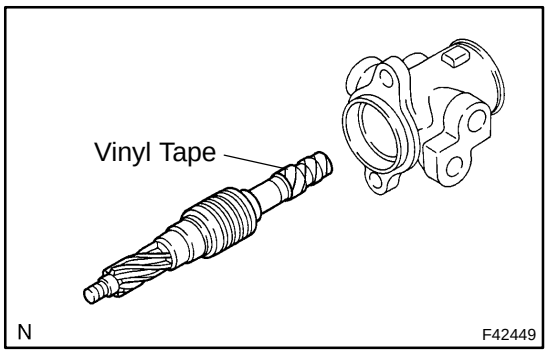

(e) To prevent oil seal lip damage, wind vinyl tape around the serrated part of the control valve.

(f) Install the control valve to the valve housing.

NOTICE:

Be careful not to damage the control valve rings and oil seal lip.

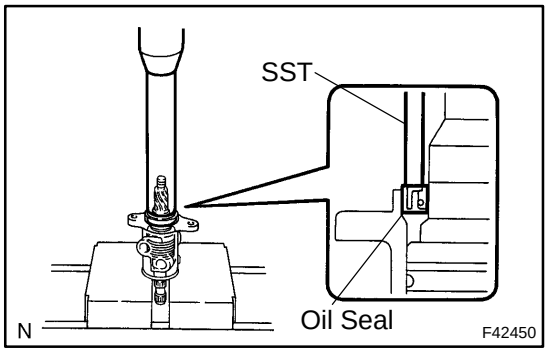

(g) Coat a new oil seal lip with power steering fluid.

(h) Using SST and a press, install the oil seal.
SST 09612–22011

NOTICE:

Make sure that the oil seal is installed facing in the correct direction.

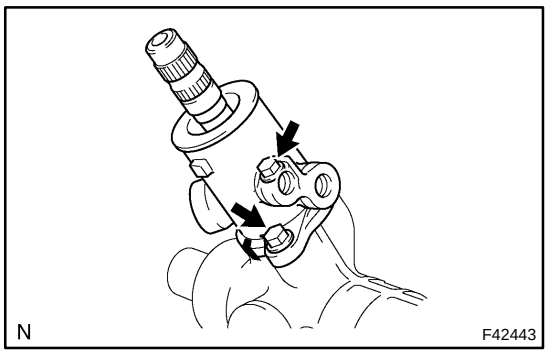

(i) Apply grease to the needle bearing.
(j) Install a new gasket to the valve housing.
(k) Wind vinyl tape around the serration part of the control valve.
(l) Install the valve housing to the rack housing with the 2 bolts.
Torque: 18 N·m (185 kgf·cm, 13 ft·lbf)

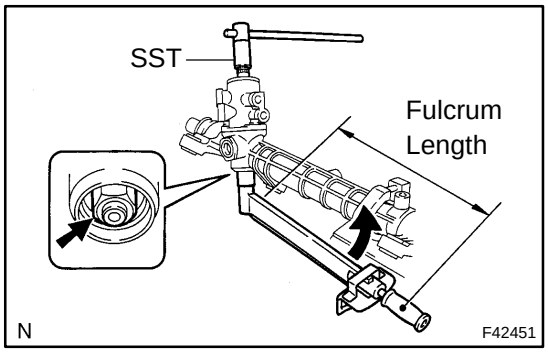

(m) Using SST, stop the control valve shaft rotation and install a self–locking nut.
SST 09616–00011
Torque: 25 N·m (250 kgf·cm,18 ft·lbf)
(n) Apply sealant to 2 or 3 threads of the rack housing cap.
Sealant:
Part No. 08833–00080, THREE BOND 1344, LOCTITE 242 or equivalent
(o) Install the rack housing cap.
Torque: 59 N·m (600kgf·cm, 43 ft·lbf)

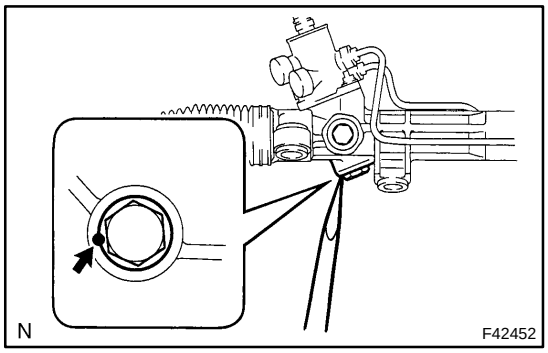

(p) Using a punch and a hummer, stake the rack housing cap and rack housing.

53. INSTALL RACK GUIDE

(a) Apply molybdenum disulfide lithium base grease to the contact surface of the power steering rack and of the rack guide.
(b) Install the rack guide and compression spring to the rack housing.
(c) Apply sealant to 2 or 3 threads of the rack guide spring cap.
Sealant:
Part No. 0.8833–00080, THREE bOND 1344, LOCTITE 242 or equivalent
(d) Temporarily install the rack guide spring cap.

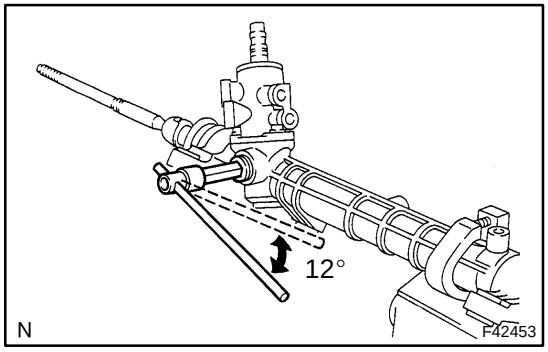

54. INSPECT TOTAL PRELOAD

(a) To prevent the steering rack teeth from damaging the oil seal lip, temporarily install the RH and LH rack ends.
(b) Torque the rack guide spring cap.
Torque: 25 N·m (250 kgf·cm, 18 ft·lbf)
(c) Back off the rack guide spring cap 12°.

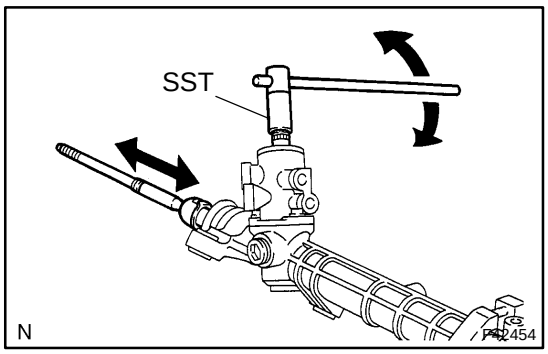

(d) Using SST, turn the control valve shaft right and left 1 or 2 times.
SST 09616–00011

(e) Loosen the rack guide spring cap until the rack guide spring is not functioning.

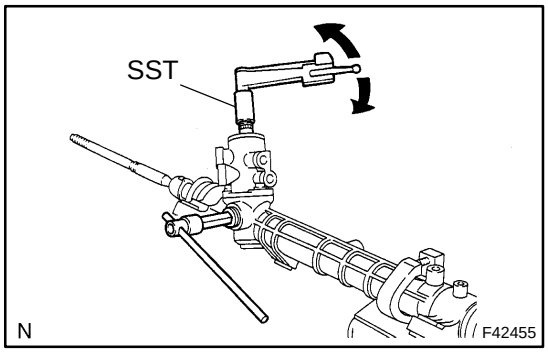

(f) Using SST and torque wrench, tighten the rack guide spring cap until the preload is within the specification.
SST 09616–00011
Preload (turning):
1.0 – 1.8 N·m (20 – 18 kgf·cm, 8.6 – 15.7 ft·lbf)

(g) Apply sealant to 2 or 3 threads of the rack guide spring cap lock nut.
Sealant:
Part No. 08833–00080, THREE BOND 1344, LOCTITE 242 or equivalent

(h) Temporarily install the lock nut.

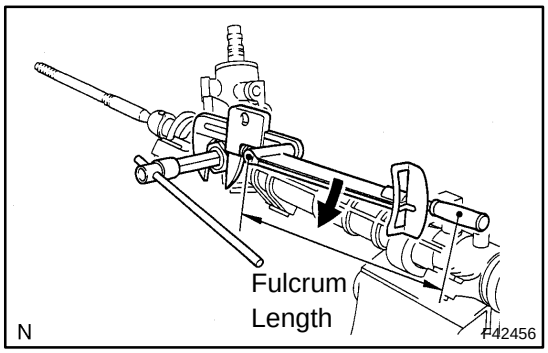

(i) Using a hexagon wrench (19 mm), hold the rack guide spring cap and using SST, torque the nut.
SST 09922–10010
Torque: 43 N·m (440 kgf·cm, 32 ft·lbf)

NOTICE:
Use SST 09922–10010 in the direction shown in the illustration.

HINT:
Use a torque wrench with a fulcrum length of 345 mm (13.58 in.).

(j) Recheck the total preload.
Preload (turning):
1.0 – 1.8 N·m (10 – 18 kgf·cm, 8.6 – 15.7 ft·lbf)

(k) Remove the RH and LH rack ends.

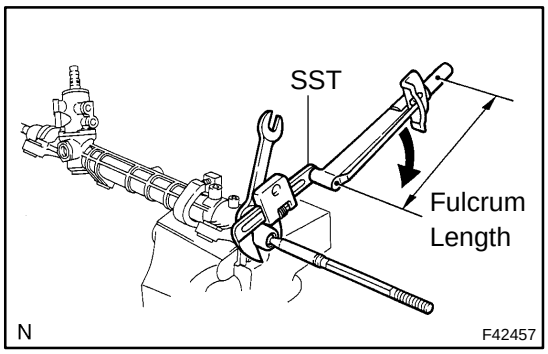

55. INSTALL STEERING RACK END SUB–ASSY

(a) Using a spanner, hold the steering rack steadily and using SST, install the 2 rack ends.

SST 09922–10010

Torque: 62 N·m (630 kgf·cm, 46 ft·lbf)

NOTICE:

Use SST 09922–10010 in the direction shown in the illustration.

HINT:

- Using SST, hold the rack and install the rack and sub–assy.
- Use a torque wrench with a fulcrum length of 380 mm (14.96 in.).

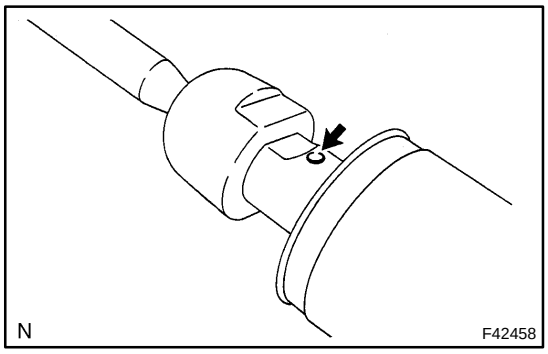

(b) Ensure that the steering rack hole is not clogged with grease.

HINT:

If the hole is clogged, the pressure inside the boot will change after it is assembled and steering wheel is turned.

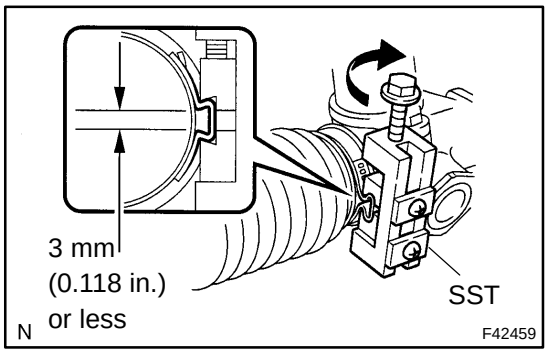

56. INSTALL STEERING RACK BOOT NO.2

(a) Install the steering rack boot No.2.

(b) Using SST, tighten the steering rack boot No.2 clamp, as shown in the illustration.

SST 09521–24010

Clearance: 3.0 mm (0.118 in.) or less

NOTICE:

Be careful not to damage the boot.

(c) Using a pliers, install the rack boot clip.

57. INSTALL STEERING RACK BOOT NO.1

HINT:

Install the rack boot No.1 by the same procedures as the rack boot No.2.

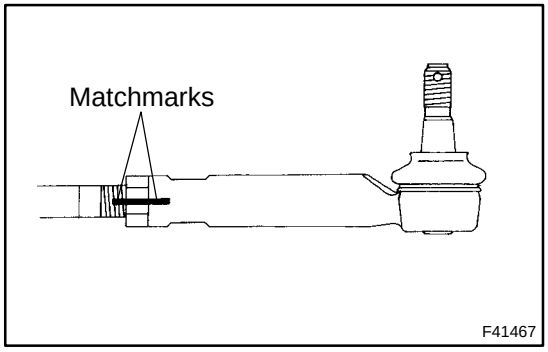

58. INSTALL TIE ROD END SUB–ASSY LH

(a) Screw the lock nut and tie rod end sub–assy LH onto the rack end until the matchmarks are aligned.

HINT:

After adjusting toe–in, torque the lock nut (See page 26–5).

Torque: 74 N·m (750 kgf·cm, 54 ft·lbf)

59. INSTALL TIE ROD END SUB–ASSY RH

HINT:

Install the RH side by the same procedures as the LH side.

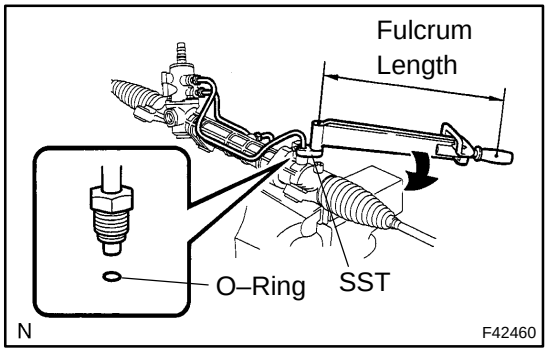

60. INSTALL STEERING RIGHT TURN PRESSURE TUBE

(a) Coat 2 new O–rings with power steering fluid and install them to the right turn pressure tube.

(b) Using SST, install the right turn pressure tube to the steering gear assy.

SST 09023–38200

Torque:12 N·m (120 kgf·cm, 8 ft·lbf)

HINT:

- Use a torque wrench with a fulcrum length of 345 mm (13.58 in.).
- This torque value is effective in the case that SST is parallel to a torque wrench.

61. INSTALL STEERING LEFT TURN PRESSURE TUBE

(a) Coat 2 new O–rings with power steering fluid and install them to the left turn pressure tube.

(b) Using SST, install the left turn pressure tube to the steering gear assy.

SST 09023–38200

Torque 12 N·m (120 kgf·cm, 8 ft·lbf)

HINT:

- Use a toque wrench with a fulcrum length of 345 mm (13.58 in.).
- This torque value is effective in the case that SST is parallel to a torque wrench.

62. INSTALL RACK & PINION POWER STEERING GEAR ASSY

(a) Install the power steering gear assy with the 4 bolts and nuts.

Torque 58 N·m (590 kgf·cm, 43 ft·lbf)

NOTICE:

- **The 4 bush must be securely installed to the power steering gear assy.**
- **When tightening the installation bolt for power steering gear, the bush should not bitten in.**

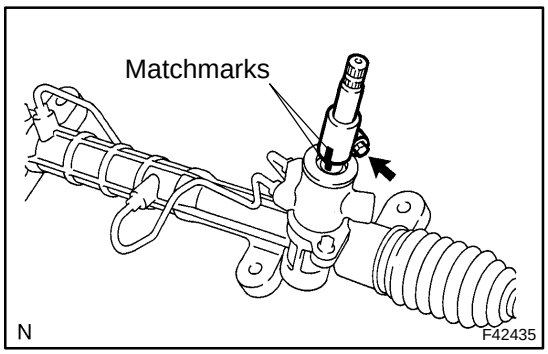

63. INSTALL STEERING INTERMEDIATE SHAFT

(a) Align the matchmarks on the steering intermediate shaft with steering pinion shaft.

(b) Install the bolt.

Torque: 35 N·m (360 kgf·cm, 26 ft·lbf)

64. INSTALL STEERING COLUMN HOLE COVER SUB–ASSY NO.1

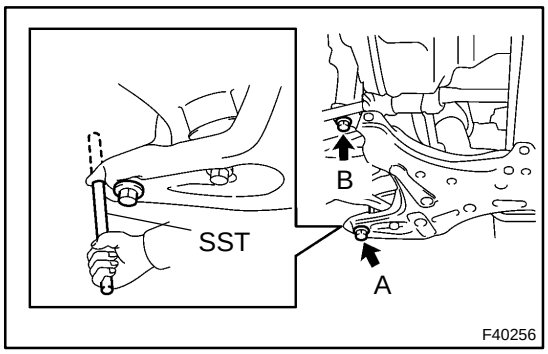

65. INSTALL FRONT SUSPENSION CROSSMEMBER SUB–ASSY

(a) Using SST, align the holes of the front suspension member RH and body, and temporarily tighten the bolt in order of A, B.
SST 09670–00010

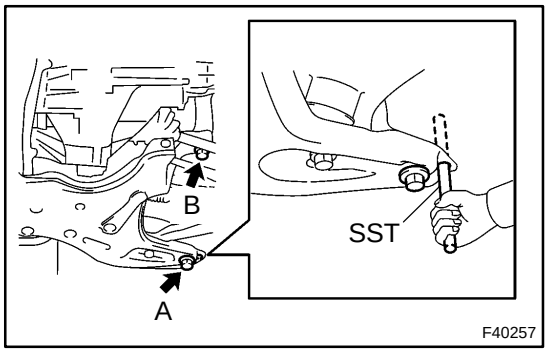

(b) Using SST, align the holes of the front suspension member LH and body, and temporarily tighten the bolt in order of A, B.
SST 09670–00010

(c) Using SST, align the holes of the front suspension member RH and body, and torque the bolt A and B.
SST 09670–00010
Torque:
Bolt A: 157 N·m (1,600 kgf·cm, 116 ft·lbf)
Bolt B: 157 N·m (1,600 kgf·cm, 116 ft·lbf)

(d) Using SST, align the holes of the front suspension member LH and body, and torque the bolt A and B.
SST 09670–00010
Torque:
Bolt A: 157 N·m (1,600 kgf·cm, 116 ft·lbf)
Bolt B: 157 N·m (1,600 kgf·cm, 116 ft·lbf)

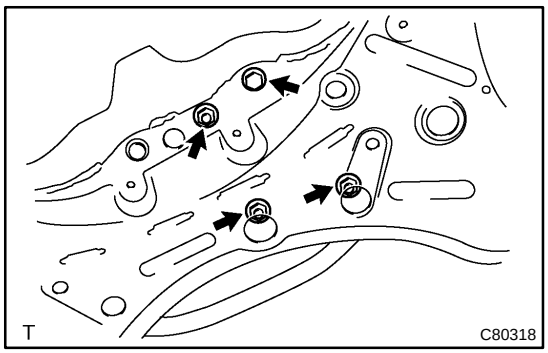

(e) Connect the engine mounting insulator RR to the crossmember with the bolt and 3 nuts.
Torque: 52 N·m (530 kgf·cm, 38 ft·lbf)

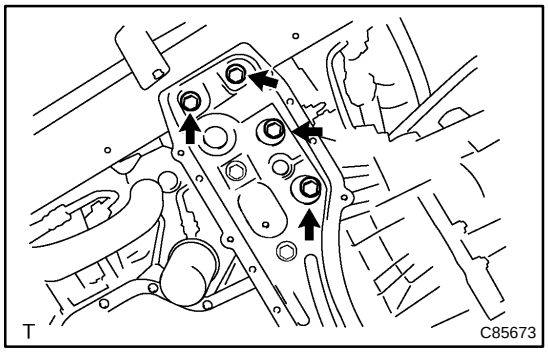

(f) Install the center member to the frame with the 2 bolts.
Torque: 39 N·m (400 kgf·cm, 29 ft·lbf)

(g) Connect the engine mounting insulator FR to the center member with the 2 bolts.
Torque: 52 N·m (530 kgf·cm, 38 ft·lbf)

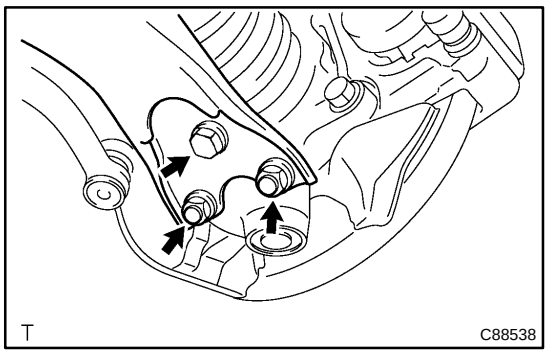

66. CONNECT FRONT SUSPENSION ARM SUB–ASSY LOWER NO.1 LH

(a) Connect the front suspension lower arm No.1 to the lower ball joint with the bolt and 2 nuts.
Torque: 89 N·m (910 kgf·cm, 66 ft·lbf)

67. CONNECT FRONT SUSPENSION ARM SUB–ASSY LOWER NO.1 RH

HINT:

Use the same manner described above to the other side.

68. CONNECT FRONT STABILIZER LINK ASSY LH

(a) Connect the front stabilizer link assy LH with the nut.
Torque: 74 N·m (755 kgf·cm, 55 ft·lbf)

69. CONNECT FRONT STABILIZER LINK ASSY RH

HINT:

Use the same manner described above to the other side.

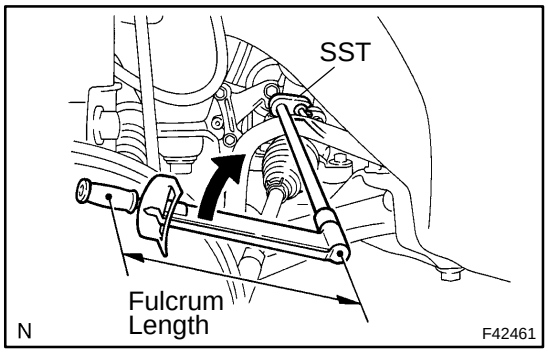

70. CONNECT RETURN TUBE SUB–ASSY

(a) Using SST, connect the return tube sub–assy.
SST 09023–38400
Torque: 23 N·m (235 kgf·cm, 17 ft·lbf)

HINT:

- Use a torque wrench with a fulcrum length of 345 mm (13.58 in.).
- This torque value is effective in case that SST is parallel to a torque wrench.

71. CONNECT PRESSURE FEED TUBE ASSY

(a) Using SST, connect the pressure feed tube assy.
SST 09023–38400
Torque: 23 N·m (235 kgf·cm, 17 ft·lbf)

HINT:

- Use a torque wrench with a fulcrum length of 345 mm (13.58 in.).
- This torque value is effective in case that SST is parallel to a torque wrench.

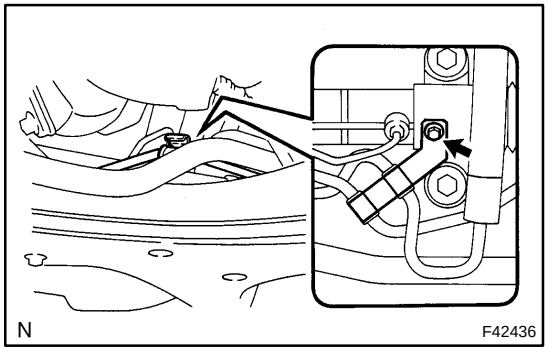

(b) Connect the tube clamp with the bolt.
Torque: 7.8 N·m (80 kgf·cm, 69 ft·lbf)

72. CONNECT STEERING INTERMEDIATE SHAFT(See page 50–8)

73. CONNECT TIE ROD END SUB–ASSY LH

(a) Connect the tie rod end sub–assy LH with the nut.
Torque: 49 N·m (500 kgf·cm, 36 ft·lbf)

(b) Install a new cotter pin.

NOTICE:

If the holes for a new cotter pin are not aligned, tighten the nut further up to 60°.

74. CONNECT TIE ROD END SUB–ASSY RH

HINT:

Use the same manner described above to the other side.

75. INSTALL ENGINE UNDER COVER LH

76. INSTALL ENGINE UNDER COVER RH

77. INSTALL FRONT WHEELS
Torque: 103 N·m (1,050 kgf·cm, 76 ft·lbf)

78. INSPECT CENTER FRONT WHEEL

79. INSTALL COLUMN HOLE COVER SILENCER SHEET

(a) Install the column hole cover silencer sheet with the 2 nuts.

80. ADD POWER STEERING FLUID

81. BLEED POWER STEERING FLUID(See page 51–3)

82. INSPECT FLUID LEAK

83. INSTALL CYLINDER HEAD COVER NO.2

(a) Install the cylinder head cover No.2 with 2 nuts and 2 clips.
Torque: 7.0 N·m (71 kgf·cm, 62 ft·lbf)

84. INSTALL HOOD SUB–ASSY

85. INSPECT HOOD SUB–ASSY

86. ADJUST HOOD SUB–ASSY(See page 75–1)

87. CENTER SPIRAL CABLE(See page 50–8)

88. INSTALL STEERING WHEEL ASSY(See page 50–8)

89. INSTALL HORN BUTTON ASSY(See page 50–8)

90. INSPECT AND ADJUST FRONT WHEEL ALIGNMENT(See page 26–5)

91. INSPECT SRS WARNING LIGHT(See page 05–424)

5105L–02

PROBLEM SYMPTOMS TABLE

HINT:

Use the table below to help you find the cause of the problem. The numbers indicate the probability of the cause of the problem. Check each part in the order shown. If necessary, repair or replace these parts.

Symptom	Suspect Area	See page
Hard steering	1. Tires (Improperly inflated)	28–1
	2. Power steering fluid level (Low)	51–3
	3. Drive belt (Loose)	14–4
	4. Front wheel alignment (Incorrect)	26–5
	5. Steering system joints (Worn)	–
	6. Suspension arm ball joints (Worn)	26–17
	7. Steering column (Binding)	–
	8. Power steering vane pump	51–8
	9. Power steering gear	51–18
Poor return	1. Tires (Improperly inflated)	28–1
	2. Front wheel alignment (Incorrect)	26–5
	3. Steering column (Binding)	–
	4. Power steering gear	51–18
Excessive play	1. Steering system joints (Worn)	–
	2. Suspension arm ball joints (Worn)	26–17
	3. Intermediate shaft, Sliding yoke (Worn)	–
	4. Front wheel bearing (Worn)	30–17
	5. Power steering gear	51–18
Abnormal noise	1. Power steering fluid level (Low)	51–3
	2. Steering system joints (Worn)	–
	3. Power steering vane pump	51–8
	4. Power steering gear	51–18

VANE PUMP ASSY

COMPONENTS

5107V–01

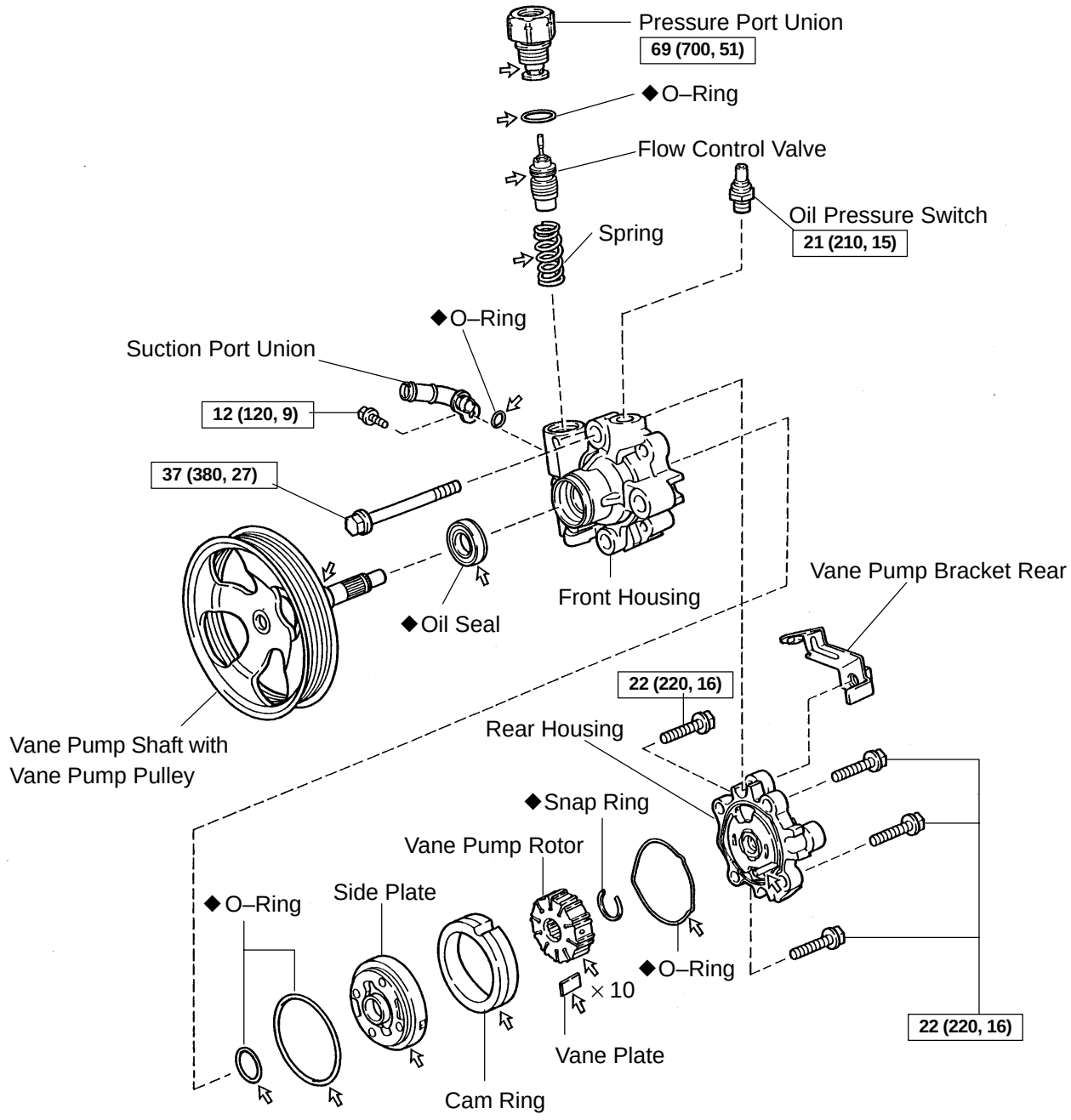

N·m (kgf·cm, ft·lbf) : Specified torque
◆Non–reusable part
⇦ Power steering fluid

N

F42473

5107W–01

OVERHAUL

NOTICE:

- **When using a vise, do not over tighten.**
- **When installing, coat the parts indicated by the arrows with power steering fluid (See page 51–7).**

1. REMOVE FRONT WHEEL RH

2. DRAIN POWER STEERING FLUID

3. REMOVE ENGINE UNDER COVER RH

4. REMOVE FAN AND GENERATOR V BELT

5. DISCONNECT OIL RESERVOIR TO PUMP HOSE NO.1

(a) Remove the clip and disconnect the oil reservoir to pump hose No.1.

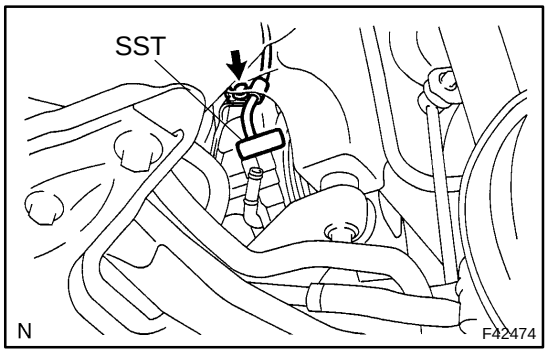

6. DISCONNECT PRESSURE FEED TUBE ASSY

(a) Using SST, disconnect the pressure feed tube assy.
SST 09023–38400

(b) Remove the bolt and disconnect the pressure feed tube clamp.

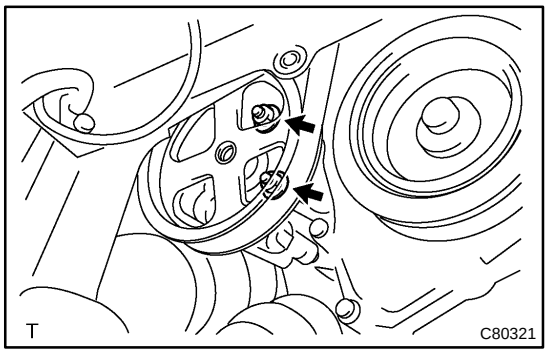

7. REMOVE VANE PUMP ASSY

(a) Disconnect the oil pressure switch connector.

(b) Remove the 2 bolts, nuts and vane pump assy.

8. REMOVE VANE PUMP BRACKET REAR

(a) Remove the bolt and vane pump bracket rear.

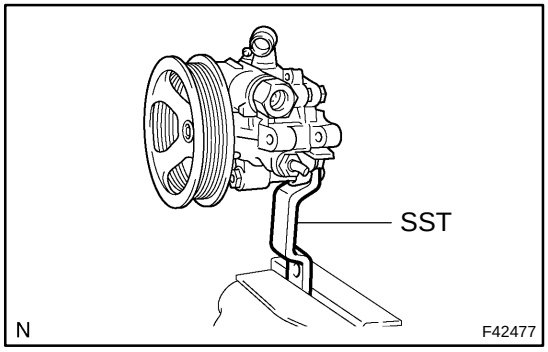

9. FIX VANE PUMP ASSY

(a) Using SST, hold the vane pump assy in a vise.
SST 09630–00014 (09631–00132)

10. REMOVE POWER STEERING SUCTION PORT UNION

(a) Remove the bolt and power steering suction port union.

(b) Remove the O–ring from the power steering suction port union.

11. REMOVE FLOW CONTROL VALVE

(a) Remove the pressure port union.

(b) Remove the O–ring from the pressure port union.

(c) Remove the flow control valve and flow control valve compression spring.

12. REMOVE POWER STEERING OIL PRESSURE SWITCH

NOTICE:

Be careful so that oil pressure switch is not dropped or strongly damaged, however if it is damaged replace it with a new one.

13. REMOVE VANE PUMP HOUSING REAR

(a) Remove the 4 bolts and vane pump housing rear from the vane pump housing front.

(b) Remove the O–ring from the vane pump housing front.

14. REMOVE W/PULLEY SHAFT SUB–ASSY

(a) Using a screwdriver, remove the snap ring from the w/ pulley shaft sub–assy.

(b) Remove the w/ pulley shaft sub–assy.

15. REMOVE VANE PUMP ROTOR

(a) Remove the 10 vane plates.

(b) Remove the vane pump rotor.

16. REMOVE VANE PUMP CAM RING

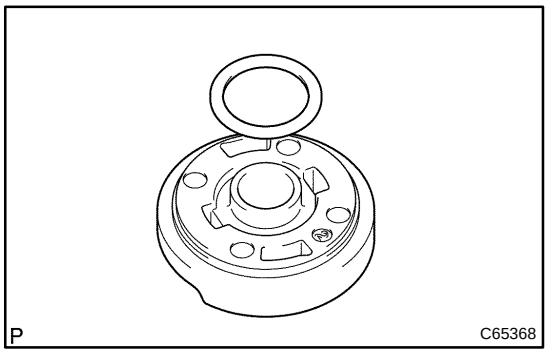

17. REMOVE VANE PUMP SIDE PLATE FRONT

(a) Remove the side plate from the pump housing front.

(b) Remove the O–ring from the side plate front.

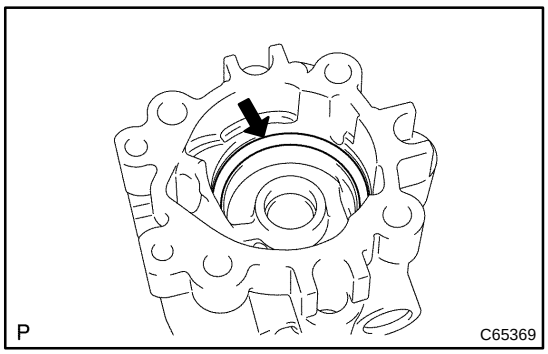

(c) Remove the O–ring from the pump housing front.

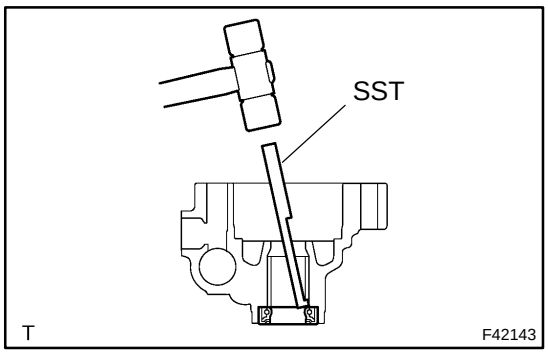

18. REMOVE VANE PUMP HOUSING OIL SEAL

(a) Using SST and a hammer, remove the vane pump housing oil seal.
SST 09631–10030

NOTICE:
Be careful not to damage the pump housing.

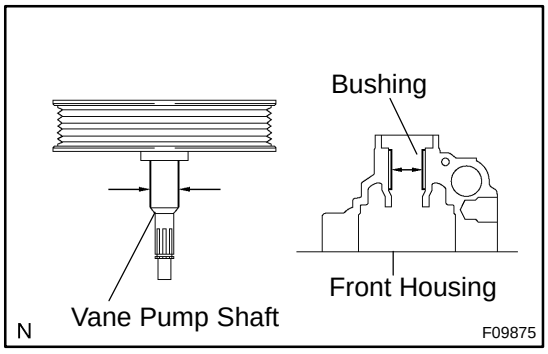

19. INSPECT OIL CLEARANCE

(a) Using a micrometer and a caliper gauge, measure the oil seal clearance.
Standard clearance:
0.021 – 0.043 mm (0.0008 – 0.0017 in.)
Maximum clearance: 0.07 mm (0.0028 in.)

If it is more than the maximum, replace the vane pump assy.

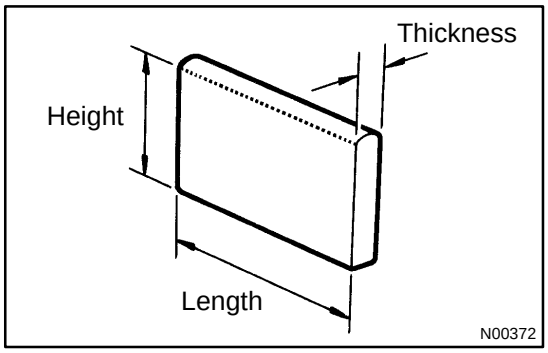

20. INSPECT VANE PUMP ROTOR AND VANE PLATES

(a) Using a micrometer, measure the height, thickness and length of the vane plates.
Minimum height: 7.6 mm (0.299 in.)
Minimum thickness: 1.405 mm (0.0553 in.)
Minimum length: 11.993 mm (0.4722 in.)

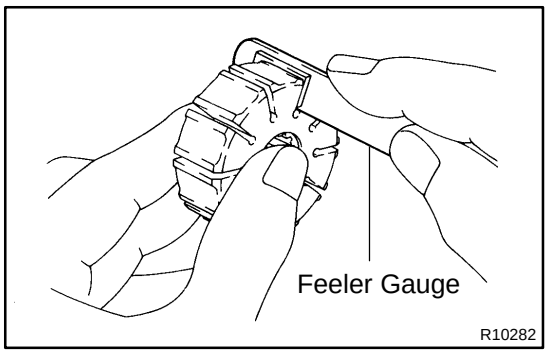

(b) Using a feeler gauge, measure the clearance between a side face of the vane pump rotor groove and vane plate.
Maximum clearance: 0.03 mm (0.0012 in.)

If it is more than the maximum, replace the vane pump assy.

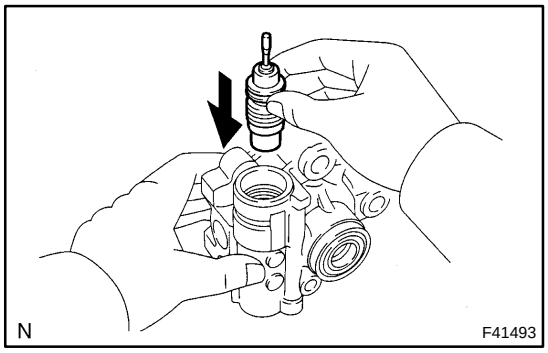

21. INSPECT FLOW CONTROL VALVE

(a) Coat the flow control valve with power steering fluid and check that it falls smoothly into the flow control valve hole by its own weight.

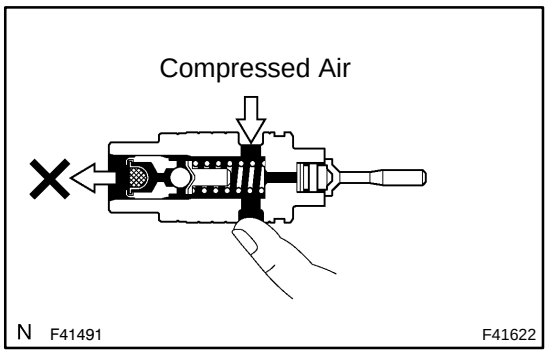

(b) Check the flow control valve for leakage. Close one of the holes and apply compressed air of 392 – 490 kPa (4 – 5 kgf·cm^2, 57 – 71 psi) into the opposite side hole, and confirm that air does not come out from the end holes.

If necessary, replace the vane pump assy.

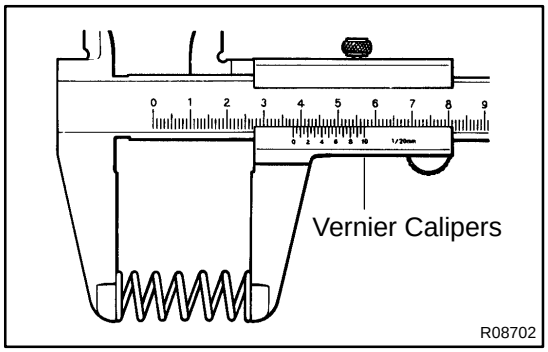

22. INSPECT FLOW CONTROL VALVE COMPRESSION SPRING

(a) Using vernier calipers, measure the free length of the spring.

Minimum free length: 36.9 mm (1.453 in.)

If it is not within the specification, replace the vane pump assy.

23. INSPECT PRESSURE PORT UNION

(a) If the union seat in the pressure port union is remarkably damaged and it may cause fluid leakage, replace the vane pump assy.

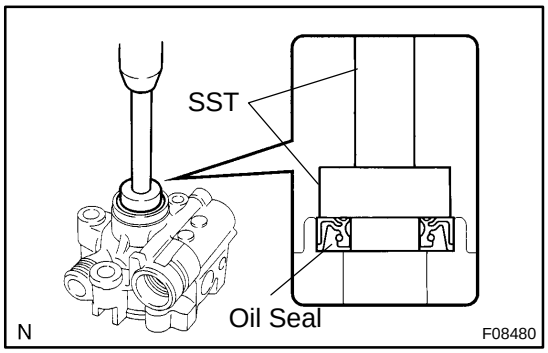

24. INSTALL VANE PUMP HOUSING OIL SEAL

(a) Coat a new vane pump housing oil seal lip with power steering fluid.

(b) Using SST and a press, install a new vane pump housing oil seal.

SST 09950–60010 (09951–00280), 09950–70010 (09951–07100)

NOTICE:

Make sure that the vane pump housing oil seal is installed facing in the correct direction.

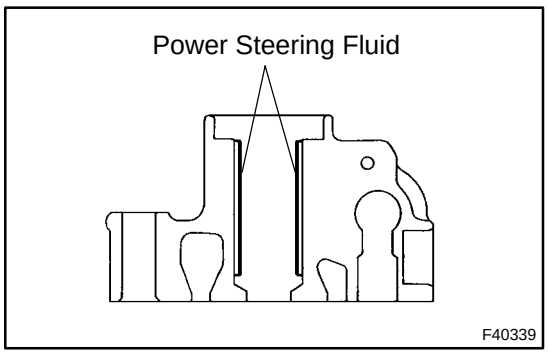

25. INSTALL W/PULLEY SHAFT SUB–ASSY

(a) Coat inside bushing surface of the vane pump housing front with power steering fluid.

(b) Gradually insert the vane pump shaft.

NOTICE:

Do not damage the vane pump housing oil seal lip in the vane pump housing front.

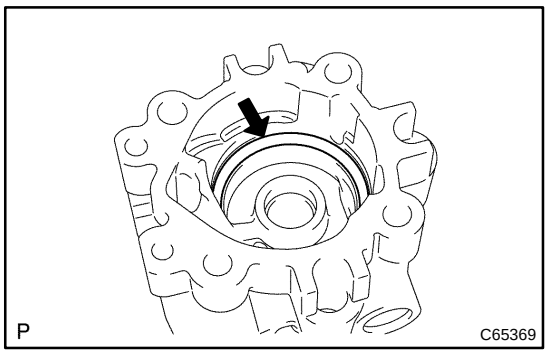

26. INSTALL VANE PUMP SIDE PLATE FRONT

(a) Coat a new O–ring with power steering fluid and install it to the vane pump housing front.

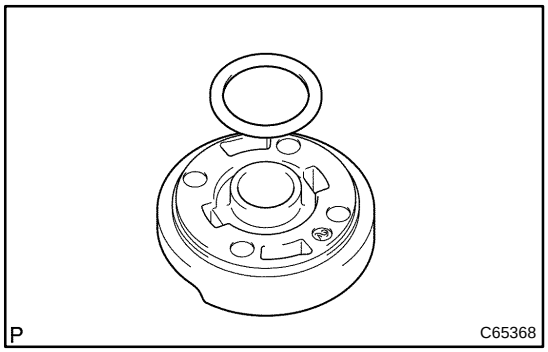

(b) Coat a new O–ring with power steering fluid and install it to the side plate front.

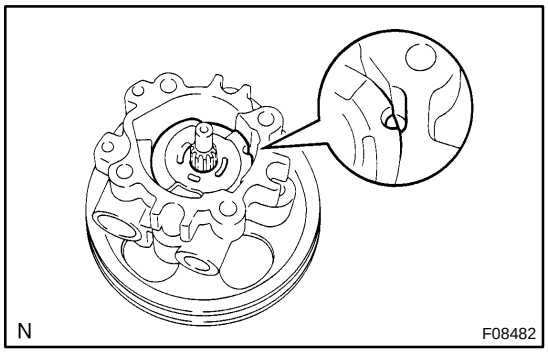

(c) Align the dent of the vane pump side plate front with that of the vane pump housing front, and install the vane pump side plate front.

NOTICE:
Make sure that the side plate front is installed facing in the correct direction.

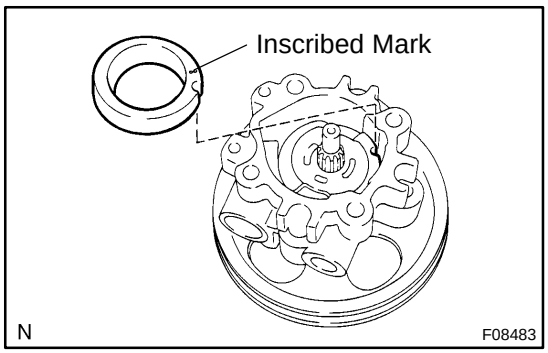

27. INSTALL VANE PUMP CAM RING

(a) Align the dent of the cam ring with that of the side plate front, and install the cam ring with the inscribed mark facing outward.

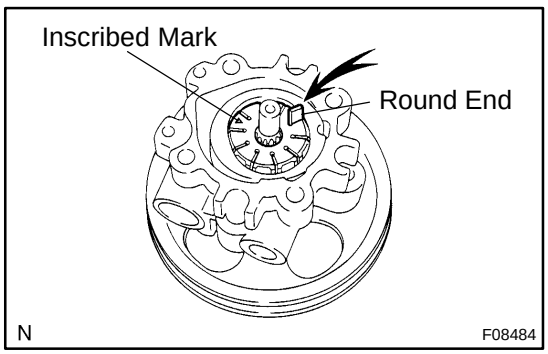

28. INSTALL VANE PUMP ROTOR

(a) Install the vane pump rotor with the inscribed mark facing outward.
(b) Coat 10 vane plates with power steering fluid.
(c) Install the vane plates with the round end facing outward.

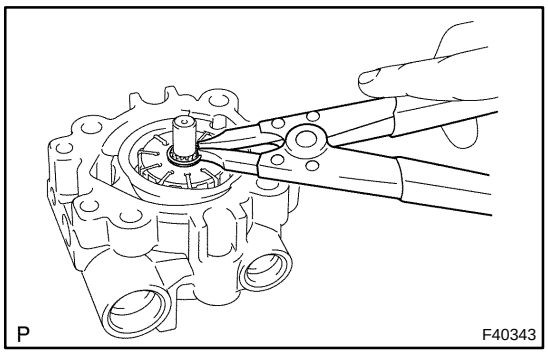

(d) Using a snap ring expander, install a new snap ring to the w/ pulley shaft sub–assy.

29. INSTALL VANE PUMP HOUSING REAR

(a) Coat a new O–ring with power steering fluid and install it to the pump housing rear.

(b) Align the straight pin of the vane pump housing rear with the dents of the vane pump cam ring, vane pump side plate front and vane pump housing front, and install the vane pump housing rear with the 4 bolts.

Torque: 22 N·m (220 kgf·cm, 16 ft·lbf)

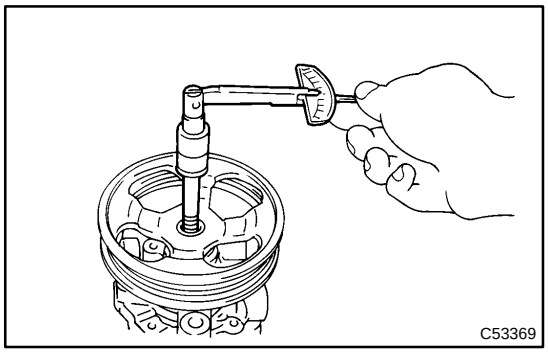

30. INSPECT PRELOAD

(a) Check that the pump rotates smoothly without abnormal noise.

(b) Temporarily install the service bolt.

Recommended service bolt:
Thread diameter: 10 mm (0.3937 in.)
Thread pitch: 1.25 mm (0.0492 in.)
Bolt length: 50 mm (1.9685 in.)

(c) Using a torque wrench, check the pump rotating torque.

Rotating torque:
0.27 N·m (2.8 kgf·cm, 2.4 ft·lbf) or less

31. INSTALL POWER STEERING OIL PRESSURE SWITCH

(a) Coat a new O–ring with power steering fluid and install it to the power steering oil pressure switch.

(b) Install the power steering oil pressure switch to the vane pump assy.

Torque: 21 N·m (210 kgf·cm, 15 ft·lbf)

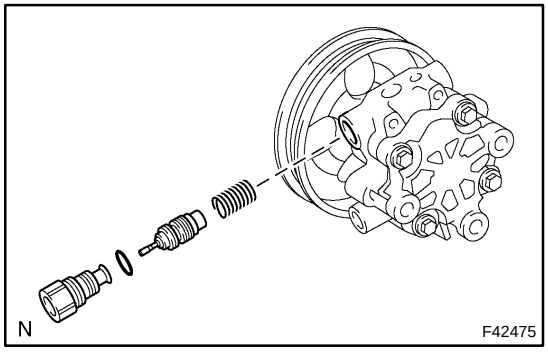

32. INSTALL FLOW CONTROL VALVE

(a) Coat the flow control valve compression spring and flow control valve with power steering fluid.

(b) Install the flow control valve compression spring and flow control valve.

(c) Coat a new O–ring with power steering fluid and install it to the pressure port union.

(d) Install the pressure port union.

Torque: 69 N·m (700 kgf·cm, 51 ft·lbf)

33. INSTALL POWER STEERING SUCTION PORT UNION

(a) Coat a new O–ring with power steering fluid, and install it to the power steering suction port union.

(b) Install the power steering suction port union with the bolt.

Torque: 12 N·m (120 kgf·cm, 9 ft·lbf)

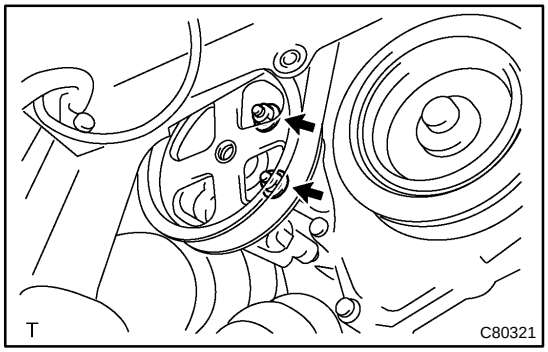

34. INSTALL VANE PUMP ASSY

(a) Install the vane pump assy with the 2 bolts and nuts.

Torque: 37 N·m (380 kgf·cm, 27 ft·lbf)

(b) Connect the oil pressure switch connector.

NOTICE:

Be careful that the oil does not adhere to the connector.

35. INSTALL VANE PUMP BRACKET REAR

(a) Install the vane pimp bracket rear with the bolt.

Torque: 37 N·m (380 kgf·cm, 27 ft·lbf)

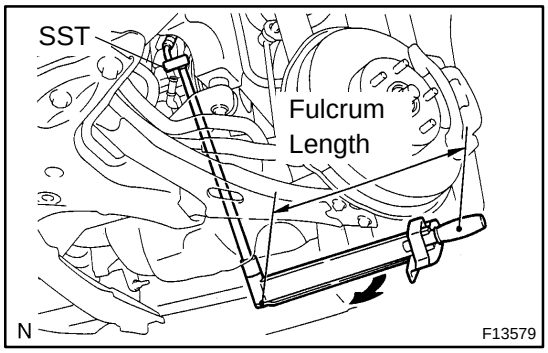

36. CONNECT PRESSURE FEED TUBE ASSY

(a) Using SST, connect the pressure feed tube assy.

SST 09023–38400

Torque: 41 N·m (420 kgf·cm, 30 ft·lbf)

HINT:

- Use a torque wrench with a fulcrum length of 345 mm (13.58 in.).
- This torque value is effective when SST is parallel to a torque wrench.

(b) Connect the pressure feed tube clamp with the bolt.

Torque: 7.8 N·m (80 kgf·cm, 69 ft·lbf)

37. CONNECT OIL RESERVOIR TO PUMP HOSE NO.1

(a) Connect the oil reservoir to pump hose No.1 with the clip.

38. INSTALL FAN AND GENERATOR V BELT

39. INSTALL FRONT WHEEL RH

Torque: 103 N·m (1,050 kgf·cm, 76 ft·lbf)

40. ADD POWER STEERING FLUID

41. BLEED POWER STEERING FLUID(See page 51–3)

42. INSPECT FLUID LEAK

43. INSTALL ENGINE UNDER COVER RH

AIR CONDITIONER UNIT ASSY

550IU–01

COMPONENTS

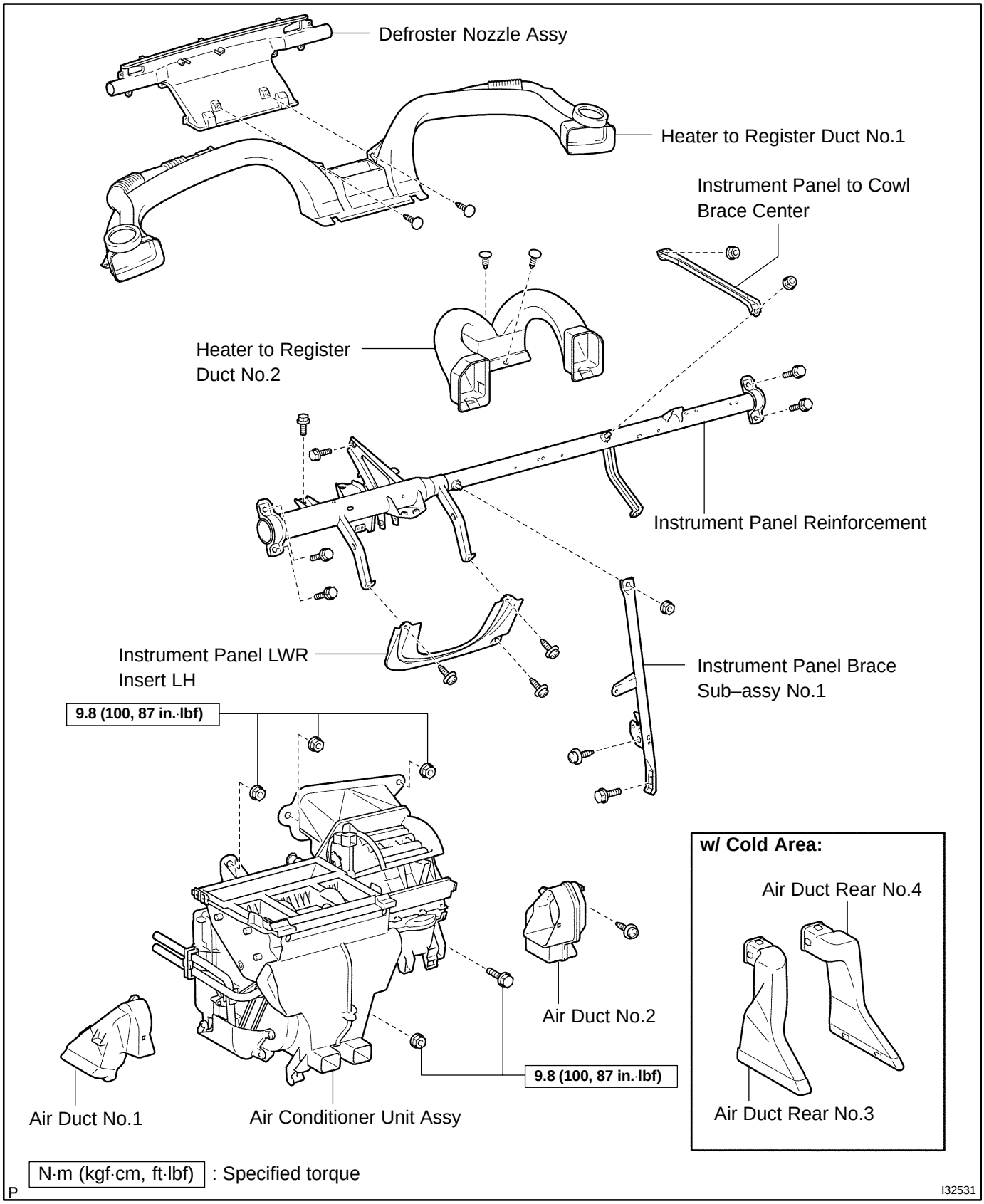

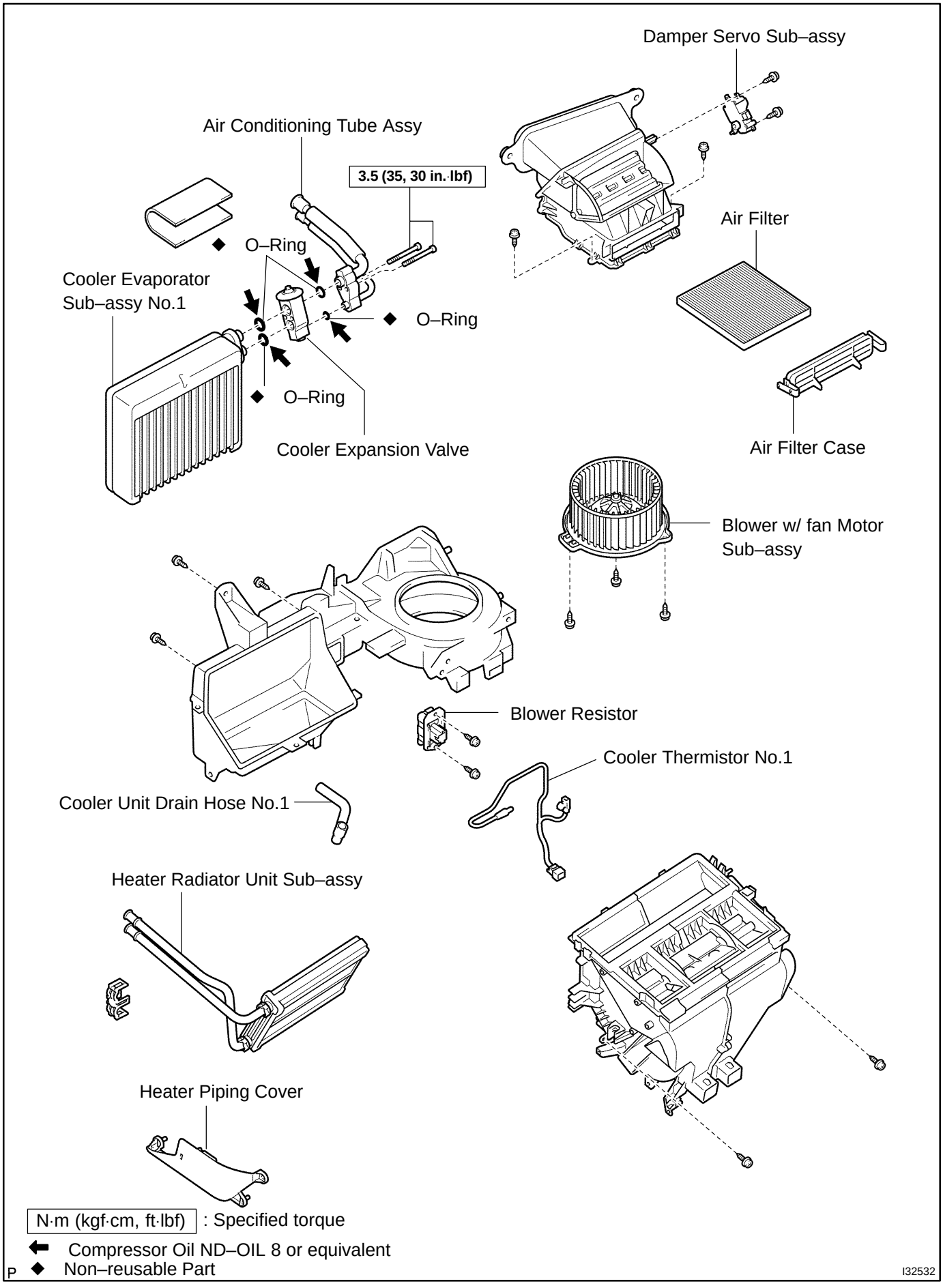
Damper Servo Sub–assy
Air Conditioning Tube Assy
3.5 (35, 30 in.·lbf)
O–Ring
Cooler Evaporator Sub–assy No.1
O–Ring
O–Ring
Cooler Expansion Valve
Air Filter
Air Filter Case
Blower w/ fan Motor Sub–assy
Blower Resistor
Cooler Thermistor No.1
Cooler Unit Drain Hose No.1
Heater Radiator Unit Sub–assy
Heater Piping Cover
N·m (kgf·cm, ft·lbf) : Specified torque
Compressor Oil ND–OIL 8 or equivalent
Non–reusable Part
I32532

550IV–02

OVERHAUL

HINT:

COMPONENT: See page 55–15

1. DISCHARGE REFRIGERANT FROM REFRIGERATION SYSTEM (See page 55–11)

SST 07110–58060 (07117–58080, 07117–58090, 07117–78050, 07117–88060, 07117–88070, 07117–88080)

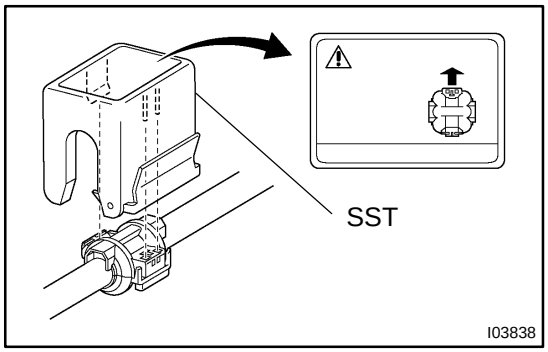

2. DISCONNECT COOLER REFRIGERANT SUCTION HOSE NO.1

(a) Install SST to piping clamp.

SST 09870–00015

HINT:

Confirm the direction of the piping clamp claw and SST using the illustration showing on the caution label.

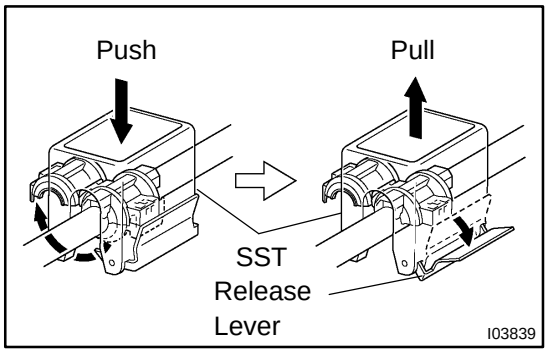

(b) Push down SST and release the clamp lock.

NOTICE:

Be careful not to deform the tube, when pushing SST.

(c) Pull SST slightly and push the release lever, then remove the piping clamp with SST.

(d) Remove the piping clamp from SST.

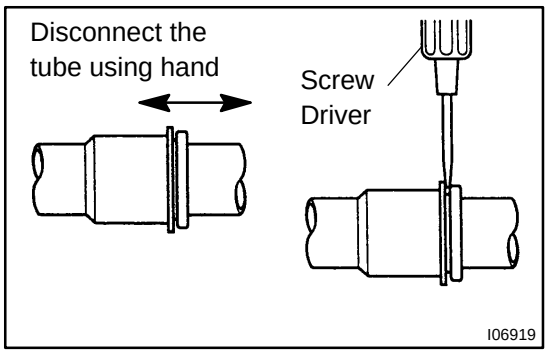

(e) Disconnect the cooler refrigerant suction hose No. 1.

NOTICE:

- **Do not use tools like screwdriver to remove the tube.**
- **Cap the open fittings immediately to keep moisture or dirt out of the system.**

3. DISCONNECT COOLER REFRIGERANT LIQUID PIPE A

SST 09870–00015

HINT:

Disconnect in the same way as the cooler refrigerant suction hose No. 1.

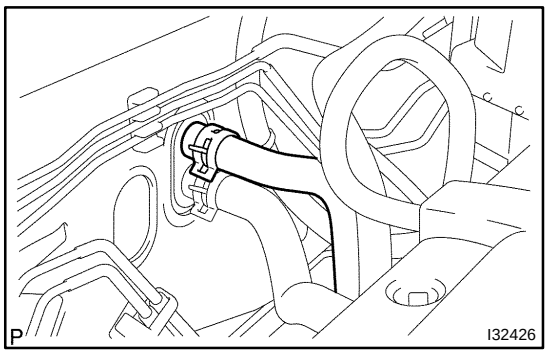

4. DISCONNECT HEATER INLET WATER HOSE

(a) Using pliers, grip the claws of clip and slide the clip and disconnect the heater inlet water hose.

5. DISCONNECT HEATER OUTLET WATER HOSE

HINT:

Disconnect in the same way as the heater inlet water hose.

6. REMOVE INSTRUMENT PANEL SUB–ASSY LOWER (See page 71–10)

HINT:

Refer to the instructions for removal of the instrument panel sub–assy lower.

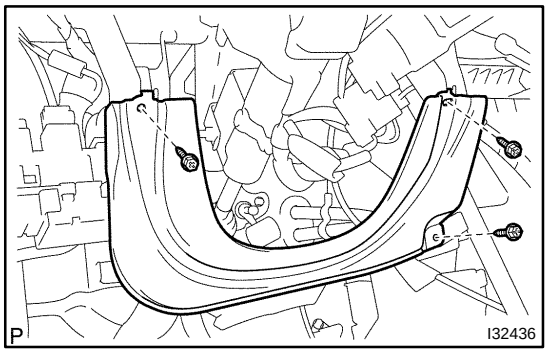

7. REMOVE INSTRUMENT PANEL LWR PAD INSERT LH

(a) Remove the 3 screws and instrument panel LWR pad insert LH.

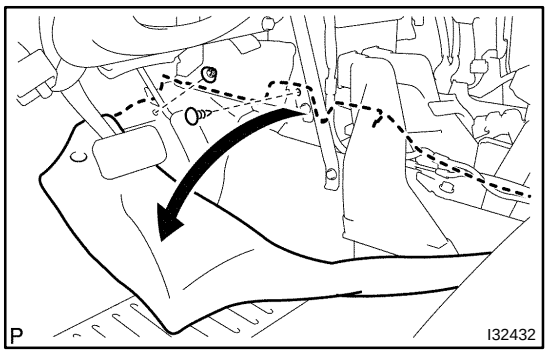

8. REMOVE INSTRUMENT PANEL BRACE SUB–ASSY NO.1

(a) Remove 2 clips and take up the floor carpet.

HINT:

Take up the floor carpet as small as the instrument panel brace sub–assy No. 1 can be removed.

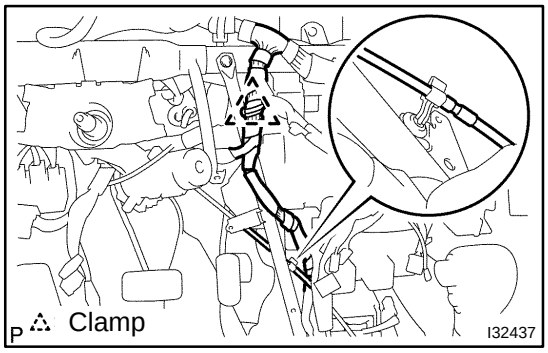

(b) Remove the clamp and floor shift parking lock cable assy.

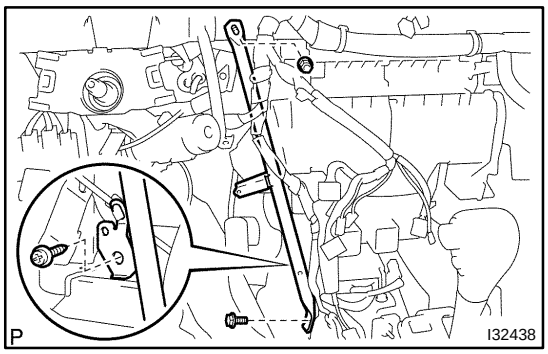

(c) Remove the screw.
(d) Remove the bolt, nut and instrument panel brace sub–assy No. 1.

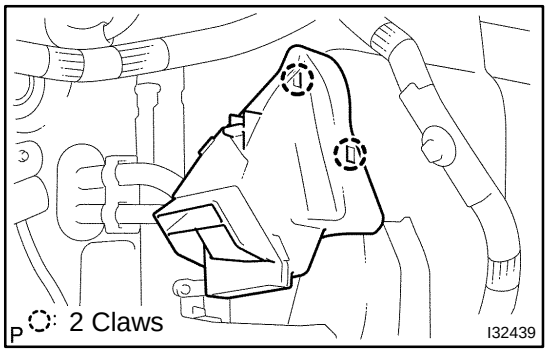

9. REMOVE AIR DUCT NO.1
(a) Release the 2 fitting claws, remove the air duct No. 1.

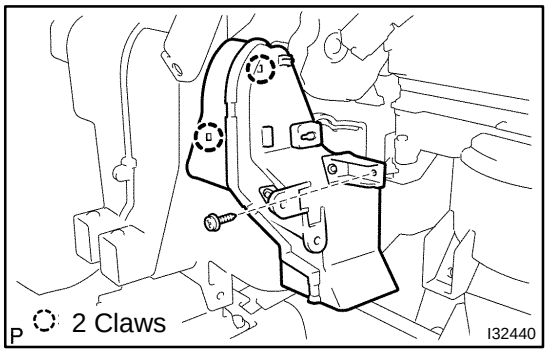

10. REMOVE AIR DUCT NO.2
(a) Remove the screw.
(b) Release the 2 fitting claws, remove the air duct No. 2.

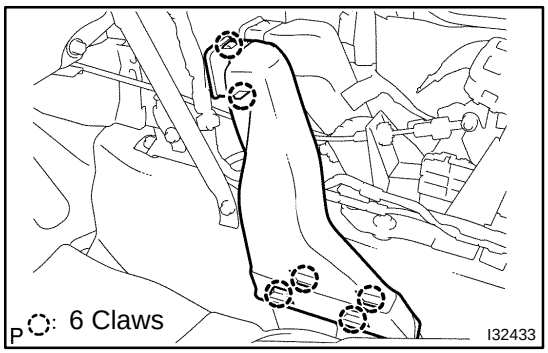

11. REMOVE AIR DUCT REAR NO.3 (W/ COLD AREA)
(a) Release the 6 fitting claws, remove the air duct rear No.3.

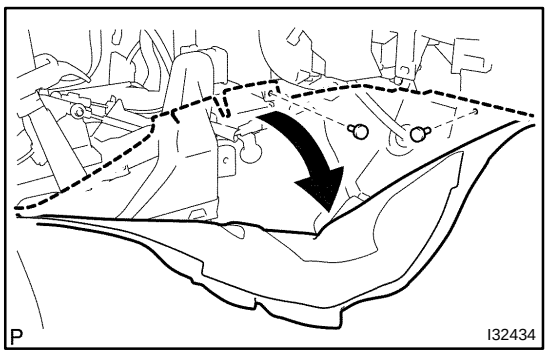

12. REMOVE AIR DUCT REAR NO.4 (W/ COLD AREA)
(a) Remove 2 clips and take up the floor carpet.
HINT:
Take up the floor carpet as small as the air duct rear No.4 can be removed.

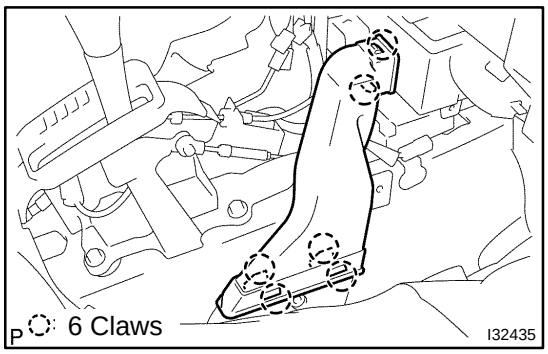

(b) Release the 6 fitting claws, remove the air duct rear No.4.

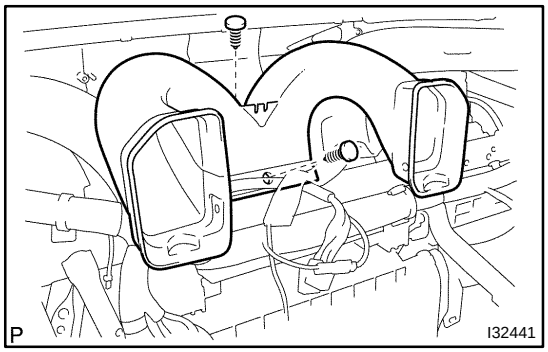

13. REMOVE HEATER TO REGISTER DUCT NO.2

(a) Remove the 2 clips and heater to register duct No. 2.

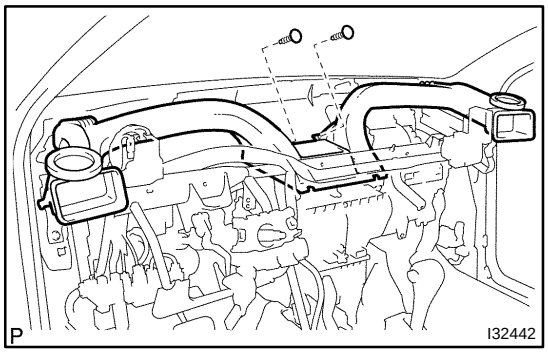

14. REMOVE HEATER TO REGISTER DUCT NO.1

(a) Remove the 2 clips and heater to register duct No. 1.

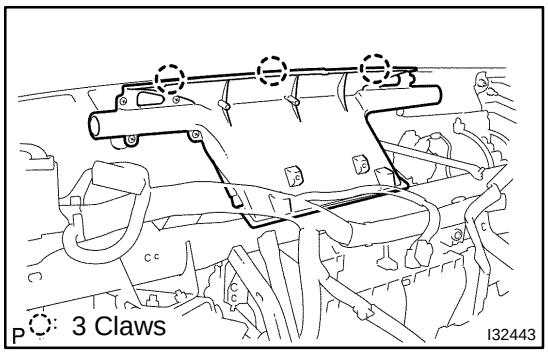

15. REMOVE DEFROSTER NOZZLE ASSY

(a) Release the 3 fitting claws, remove the defroster nozzle assy.

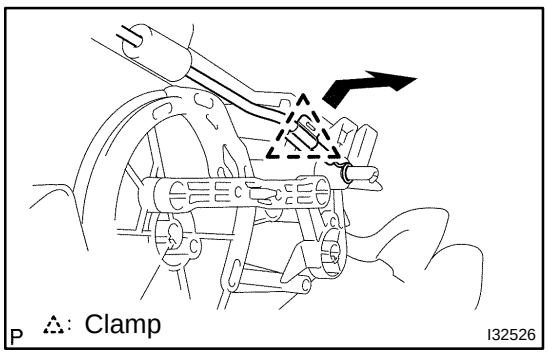

16. DISCONNECT DEFROSTER DAMPER CONTROL CABLE SUB–ASSY

(a) Disconnect the outer cable from the clamp.

(b) Disconnect the inner cable and defroster damper control cable sub–assy.

NOTICE:

- **Be careful not to bend the cable wire.**
- **If the cable wire bends, the heater control & accessory assy operationality becomes worse.**

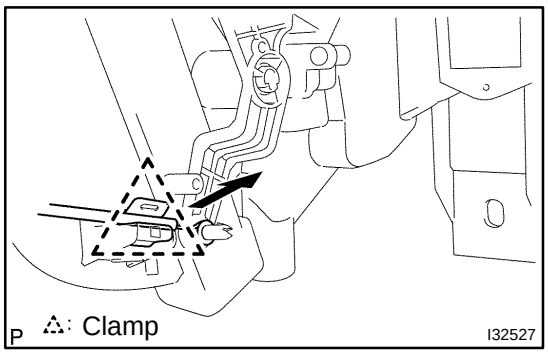

17. DISCONNECT AIRMIX DAMPER CONTROL CABLE SUB–ASSY

(a) Disconnect the outer cable from the clamp.

(b) Disconnect the inner cable and air mix damper control cable sub–assy.

NOTICE:

- **Be careful not to bend the cable wire.**
- **If the cable wire bends, the heater control & accessory assy operationality becomes worse.**

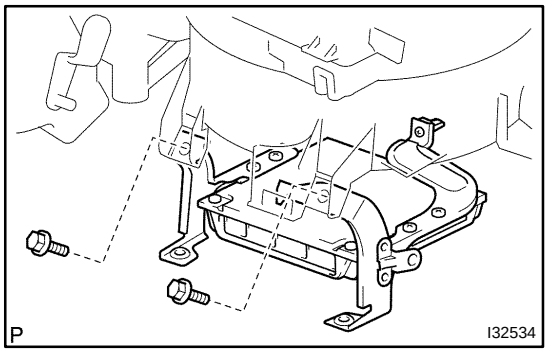

18. DISCONNECT ECM

(a) Remove the 2 bolts and disconnect the ECM.

NOTICE:

- **Do not apply excessive force to the connecter of the ECM.**
- **Do not give any impact to the ECM.**

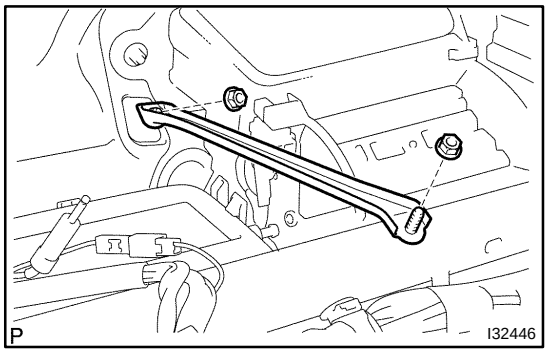

19. REMOVE INSTRUMENT PANEL TO COWL BRACE CENTER

(a) Remove the 2 nuts and instrument panel to cowl brace center.

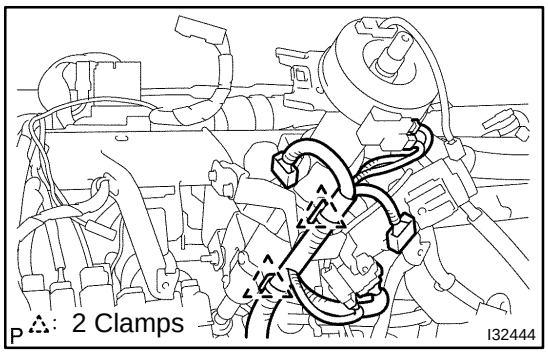

20. DISCONNECT STEERING COLUMN ASSY

(a) Disconnect the connector, remove the 2 clamps.

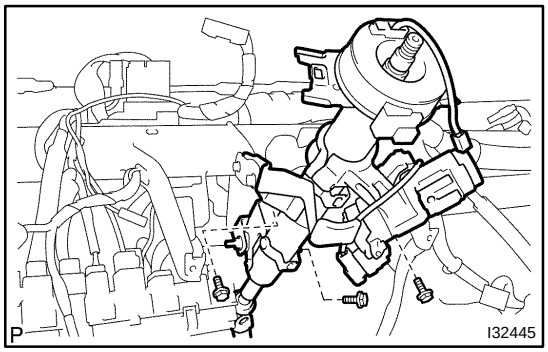

(b) Remove the 3 bolts, disconnect the steering column assy.

21. REMOVE INSTRUMENT PANEL REINFORCEMENT

(a) Remove the 8 screws and 2 earth wires from the instrument panel reinforcement.

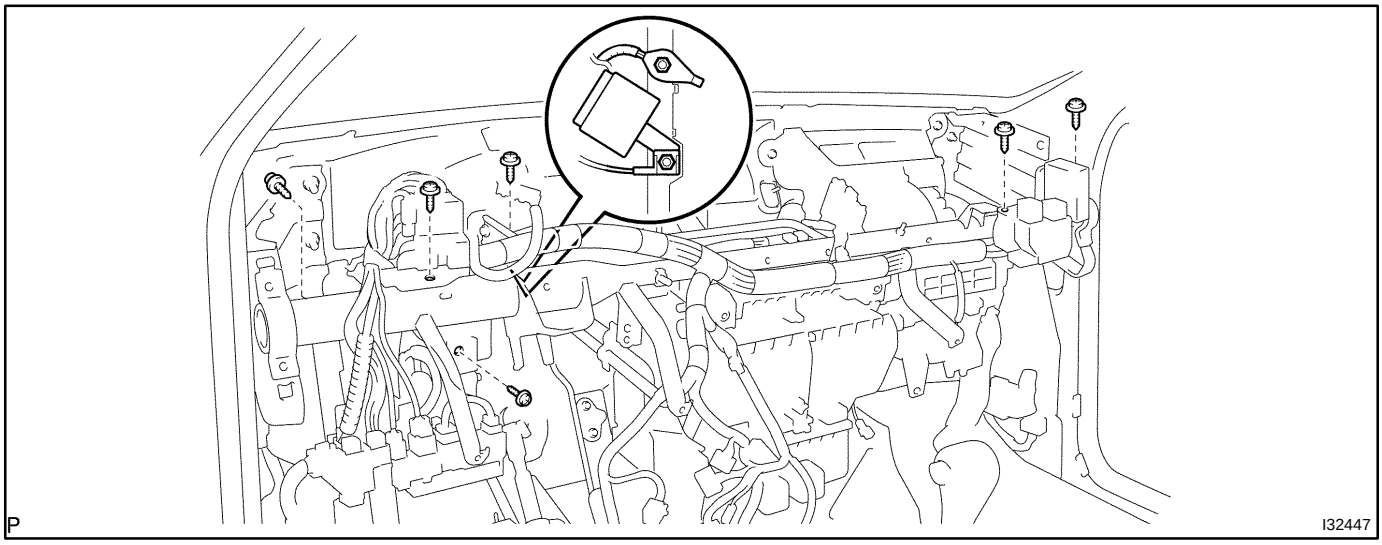

(b) Disconnect the 6 clamps and wire harness.

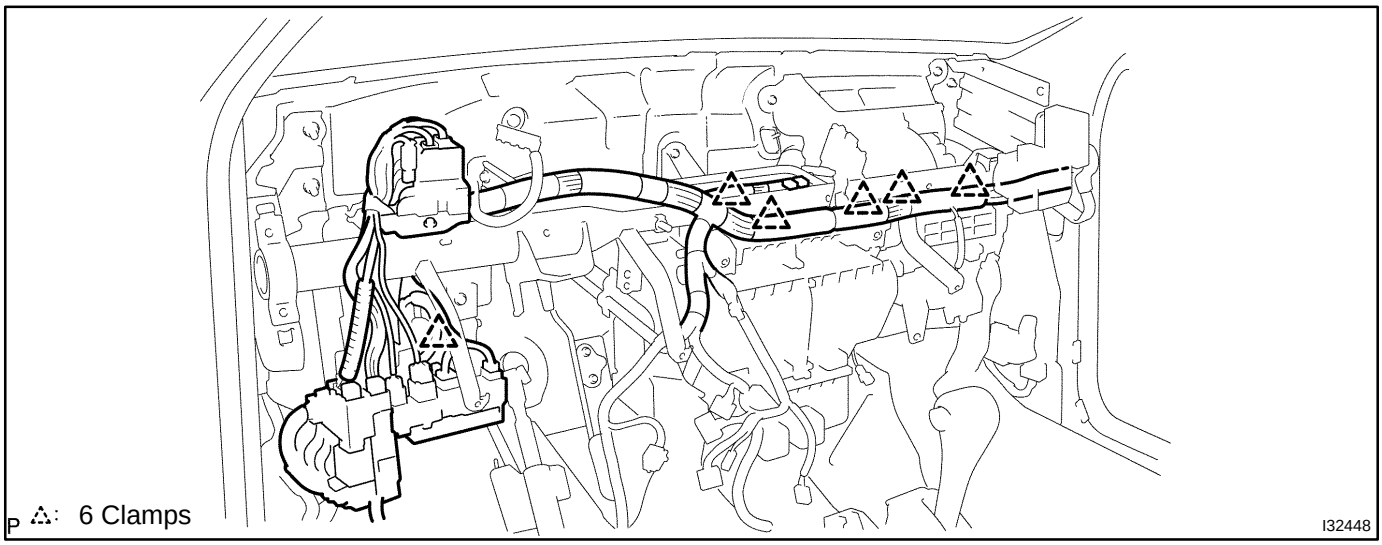

(c) Remove the 6 bolts and instrument panel reinforcement.

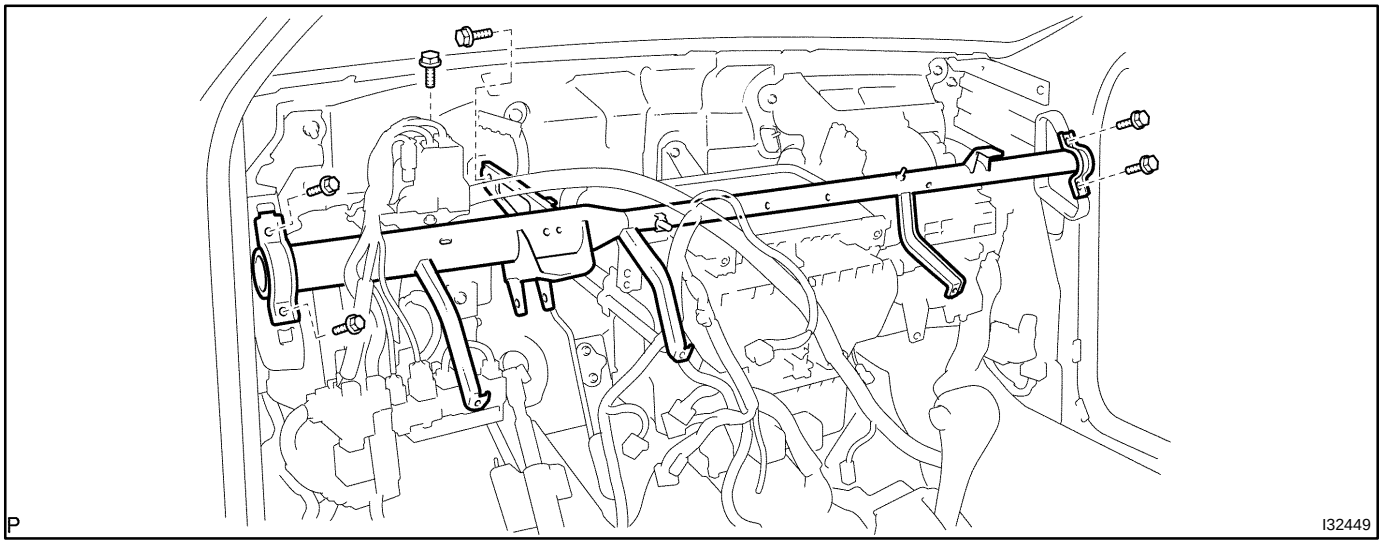

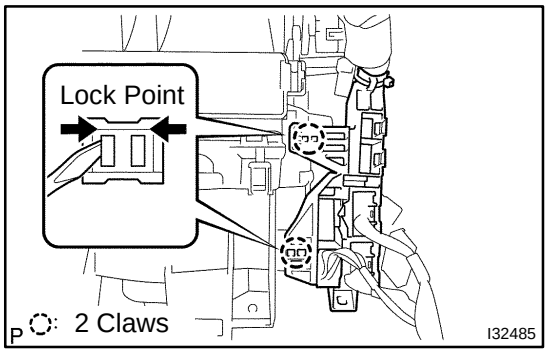

22. REMOVE AIR CONDITIONER UNIT ASSY

(a) Release the 2 fitting claws, disconnect the connector holder.

HINT:

Release the claw while pressing the lock part in the arrow direction.

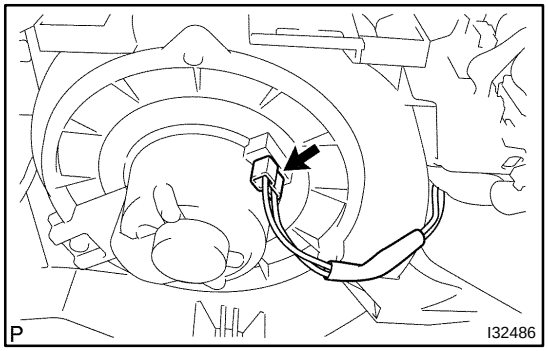

(b) Disconnect the connector from the blower w/ fan motor sub–assy.

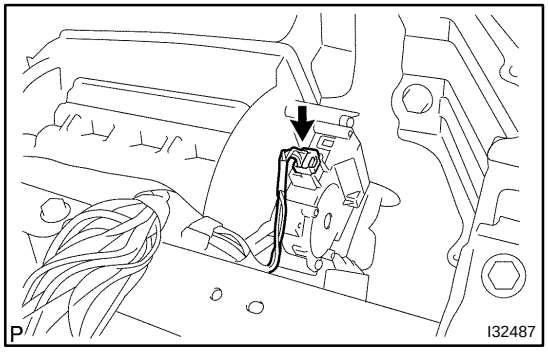

(c) Disconnect the connector from the damper servo sub–assy.

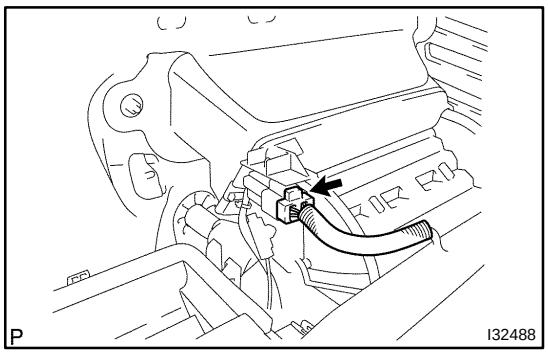

(d) Disconnect the connector from the cooler thermistor No. 1.

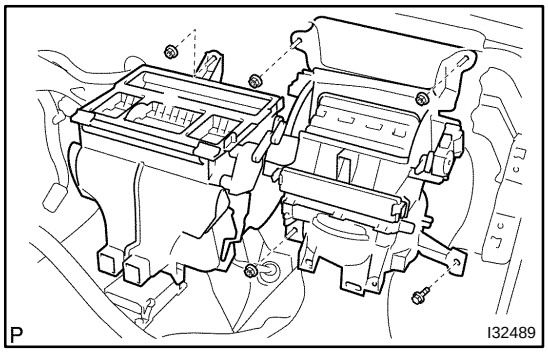

(e) Remove the 4 nuts, bolt and air conditioner unit assy.

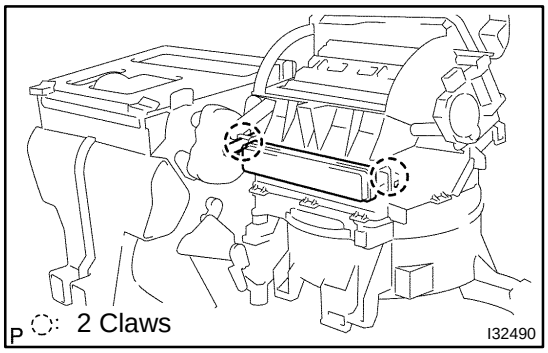

23. REMOVE AIR FILTER CASE

(a) Release the 2 fitting claws, remove the air filter case.

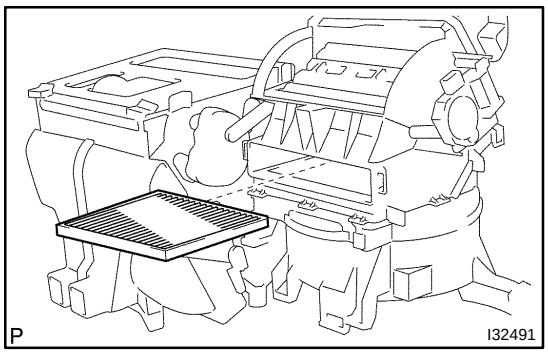

24. REMOVE AIR FILTER

(a) Remove the air filter from the air conditioner unit assy.

HINT:

Removing only the glove compartment door assy makes it possible and install the air filter.

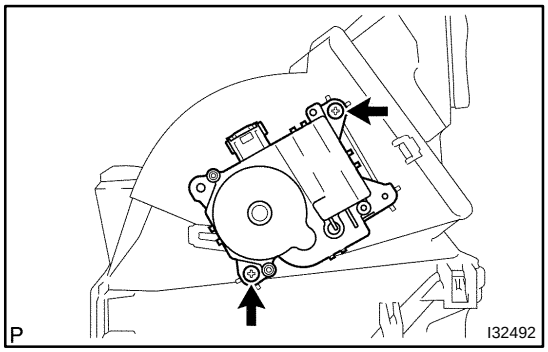

25. REMOVE DAMPER SERVO SUB–ASSY

(a) Remove the 2 screws and damper servo sub–assy.

HINT:

Removing only instrument panel sub–assy upper and heater to register duct No. 1 makes it possible and install the damper servo sub–assy.

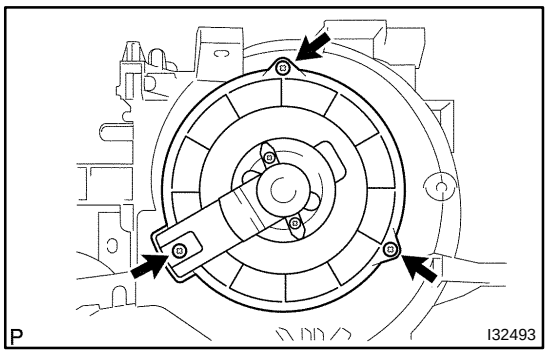

26. REMOVE BLOWER W/FAN MOTOR SUB–ASSY

(a) Remove the 3 screws and blower w/ fan motor sub–assy.

HINT:

Removing only the ECM makes it possible and install the blower w/fan motor sub–assy.

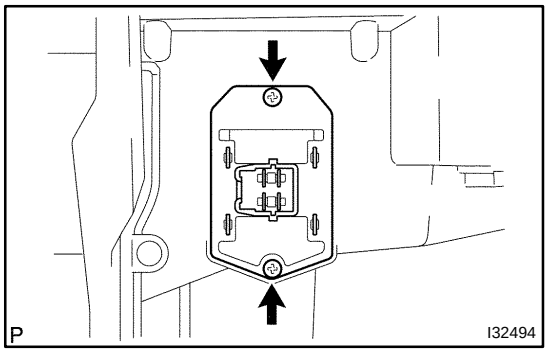

27. REMOVE BLOWER RESISTOR

(a) Disconnect the connector.

(b) Remove the 2 screws and blower resistor.

HINT:

Removing only the ECM makes it possible and install the blower resistor.

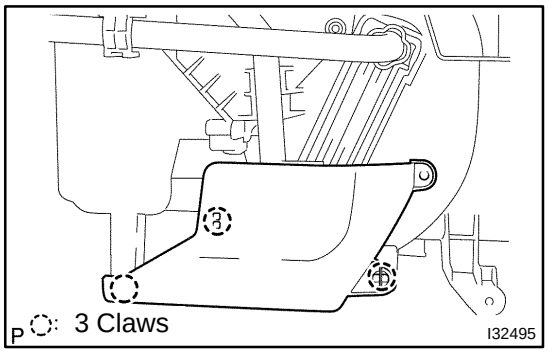

28. REMOVE HEATER PIPING COVER

(a) Release the 3 fitting claws, remove the heater piping cover.

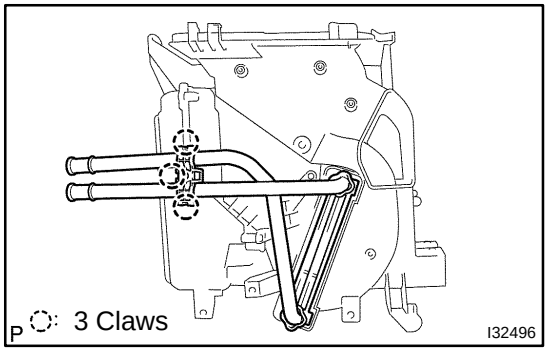

29. REMOVE HEATER RADIATOR UNIT SUB–ASSY

(a) Release the 3 fitting claws, remove the heater piping clamp and heater radiator unit sub–assy

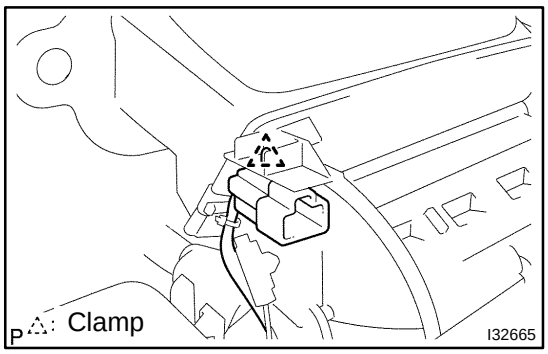

30. REMOVE COOLER THERMISTOR NO.1

(a) Remove the clamp.

(b) Release the fitting claw, remove the 2 screws and heater case.

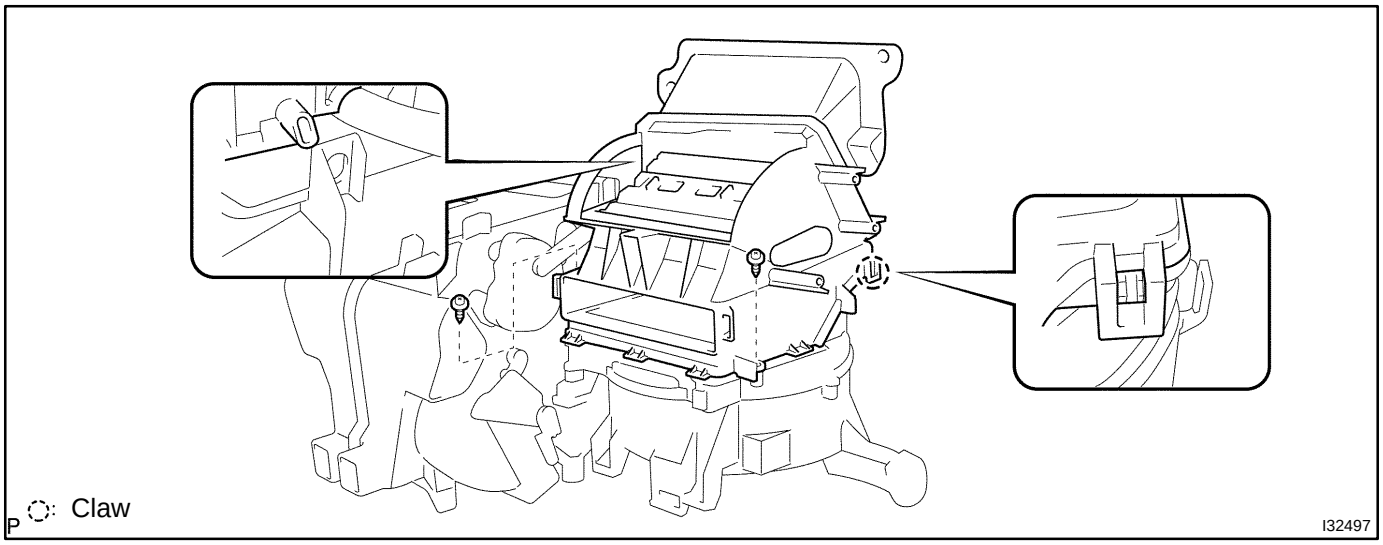

(c) Release the fitting claw, remove the 5 screws and heater case.

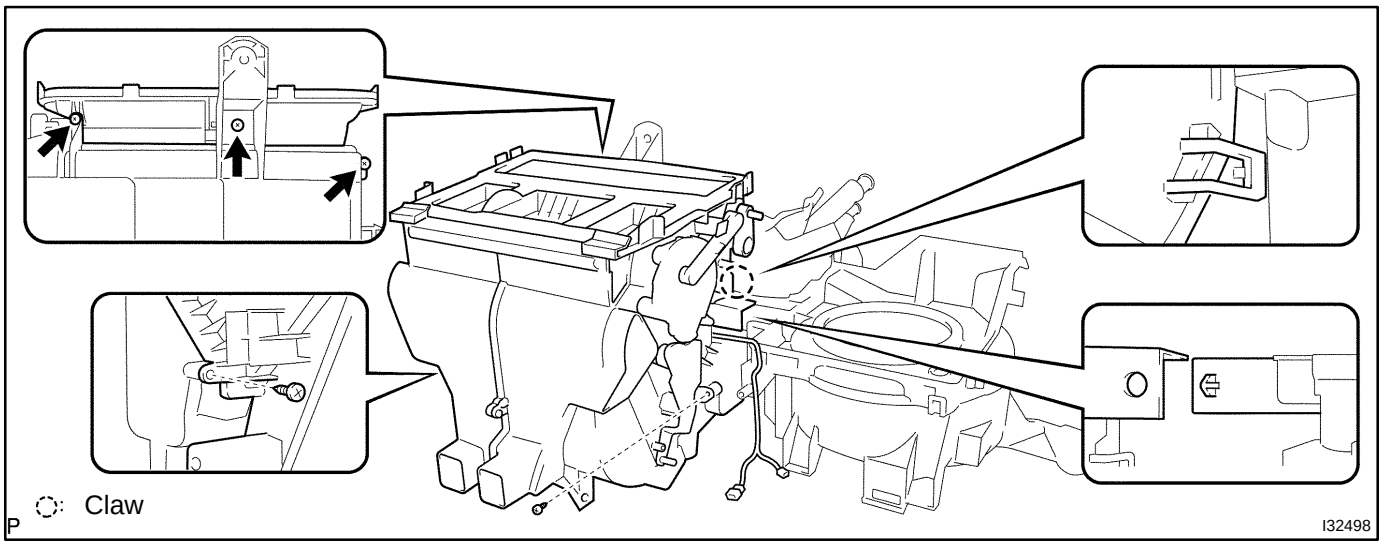

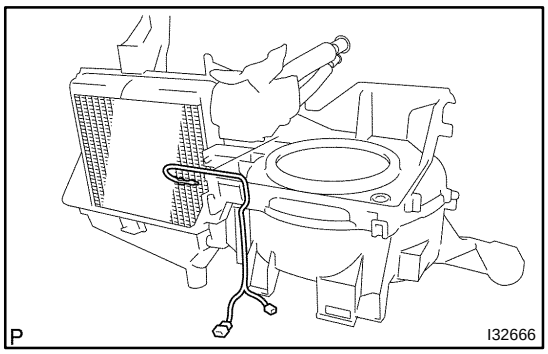

(d) Remove the cooler thermistor No. 1 from the cooler evaporator sub–assy No. 1.

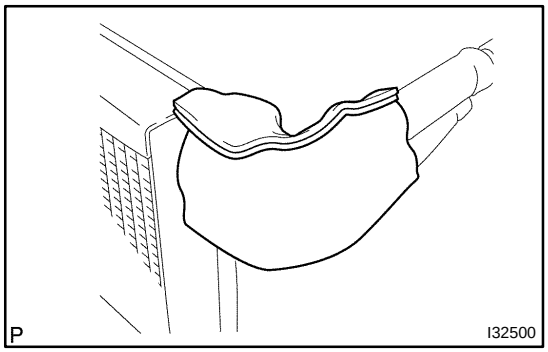

31. REMOVE AIR CONDITIONING TUBE ASSY

(a) Remove the cooler evaporator assy from the heater case.
(b) Remove the packing.

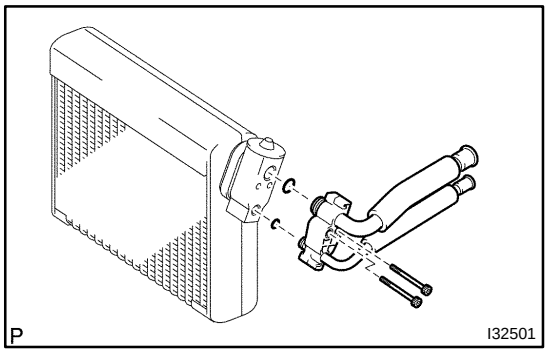

(c) Using a hexagon wrench 5.0 mm (0.20 in.), remove the 2 hexagon bolts and air conditioning tube assy.
(d) Remove the 2 O–rings from the air conditioning tube assy.

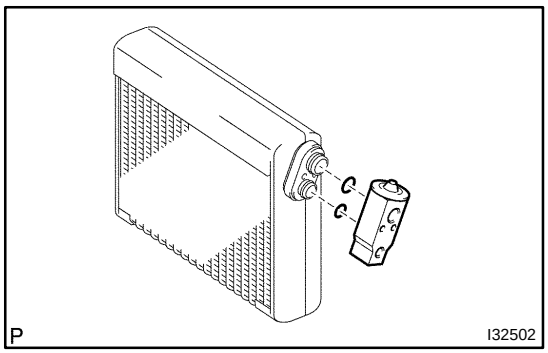

32. REMOVE COOLER EXPANSION VALVE

(a) Remove the cooler expansion valve from the cooler evaporator sub–assy No. 1.
(b) Remove the 2 O–rings from the cooler evaporator sub–assy No. 1.

HINT:
Removing only instrument panel sub–assy upper, heater to register duct No. 1 and heater case makes it possible and install the cooler expansion valve.

33. REMOVE COOLER EVAPORATOR SUB–ASSY NO.1

34. REMOVE COOLER UNIT DRAIN HOSE NO.1

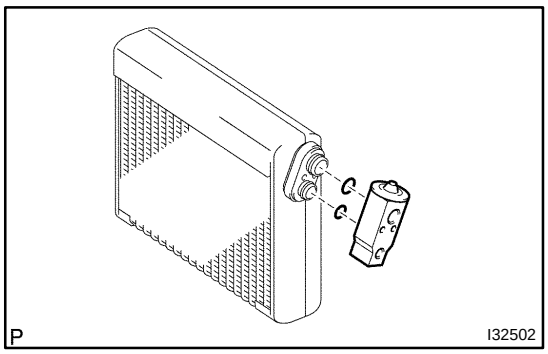

35. INSTALL COOLER EXPANSION VALVE

(a) Lubricate 2 new O–rings with compressor oil and install them to the cooler expansion valve.
Compressor oil: ND–OIL 8 or equivalent

(b) Install the cooler expansion valve from cooler evaporator sub–assy No. 1.

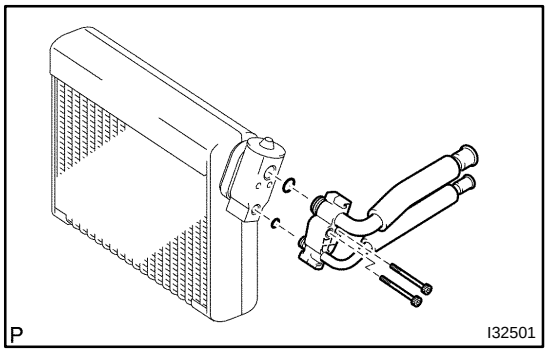

36. INSTALL AIR CONDITIONING TUBE ASSY

(a) Lubricate 2 new O–rings with compressor oil and install them to the air conditioning tube assy.
Compressor oil: ND–OIL 8 or equivalent

(b) Using a hexagon wrench 5.0 mm (0.20 in.), install the air conditioning tube assy with the 2 hexagon bolts.
Torque: 3.5 N·m (35 kgf·cm, 30 in.·lbf)

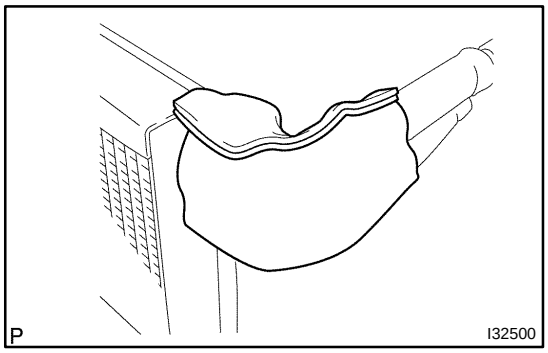

(c) Install the packing.

HINT:

Securely attach so that the gap in the packing will not be mode.

(d) Install the cooler evaporator assy to the heater case.

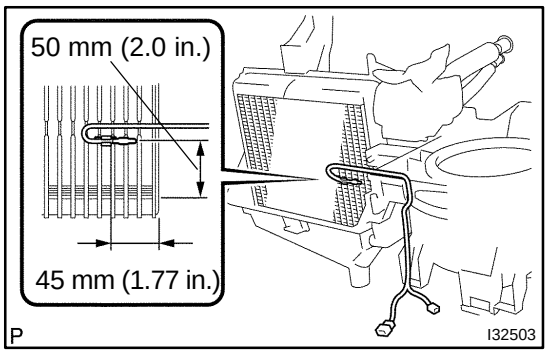

37. INSTALL COOLER THERMISTOR NO.1

(a) Install the cooler thermistor No. 1 at the shown position on the illustration.

(b) Install the heater case with the claw and 5 screws.

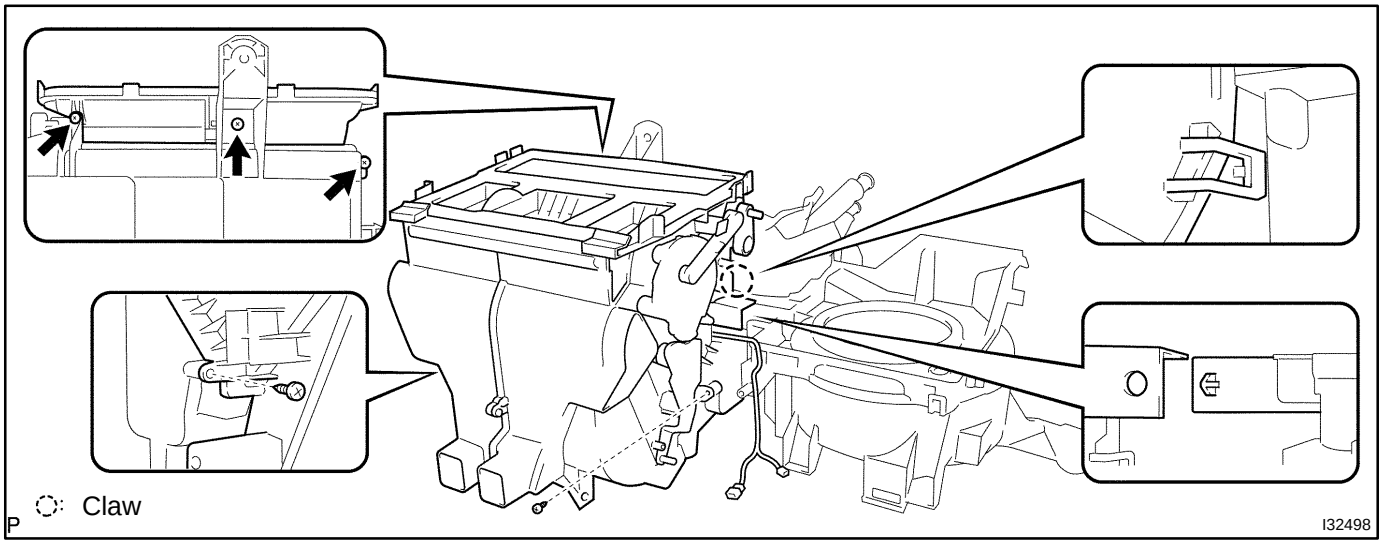

(c) Install the heater case with the claw and 2 screws.

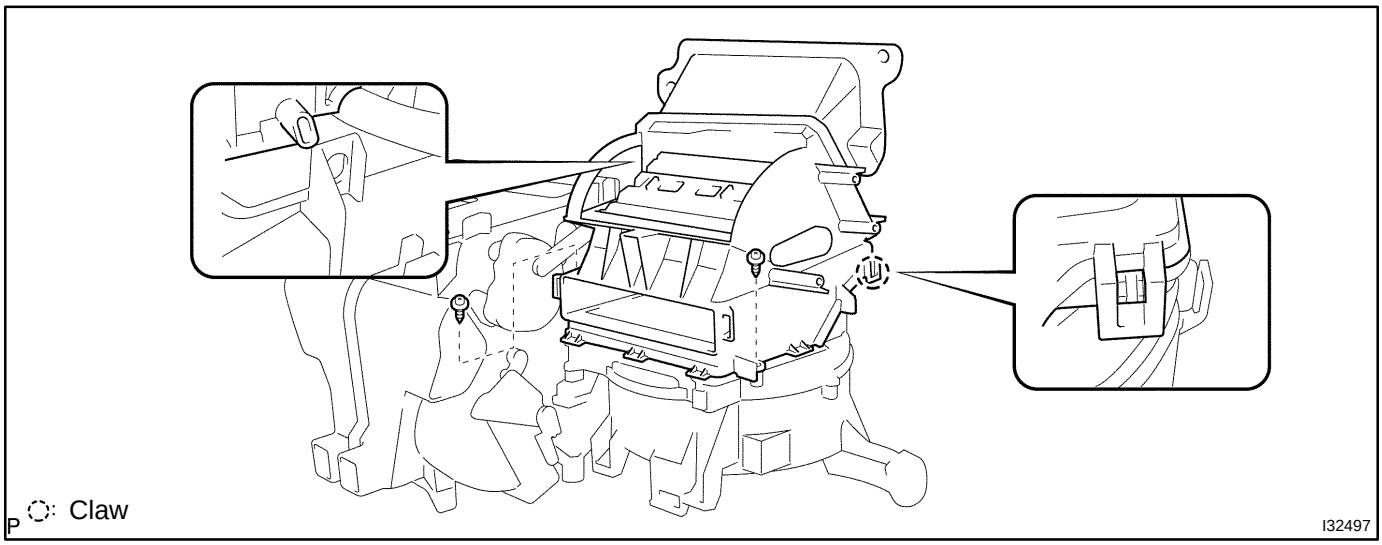

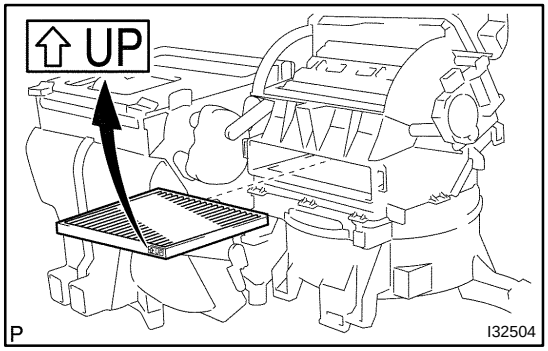

38. INSTALL AIR FILTER

(a) Install the air filter to the air conditioner unit assy.

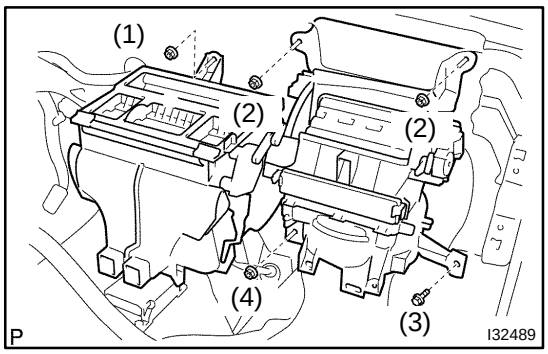

39. INSTALL AIR CONDITIONER UNIT ASSY

(a) Install the air conditioner unit assy with the 4 nuts and bolt.
Torque: 9.8 N·m (100 kgf·cm, 87 in.·lbf)

NOTICE:

Tighten the nuts and bolt in following order shown in the illustration to install the air conditioner unit assy.

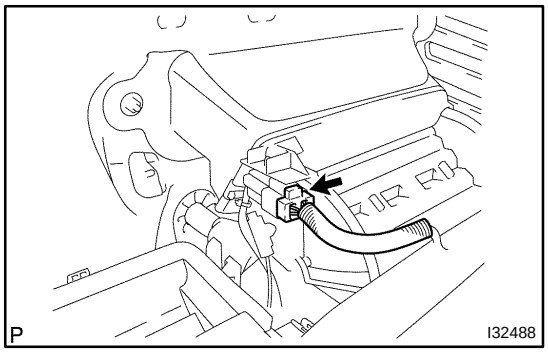

(b) Connect the connector to the cooler thermistor No. 1.

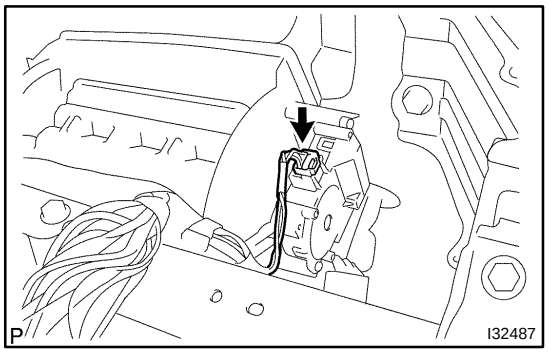

(c) Connect the connector to the damper servo sub–assy.

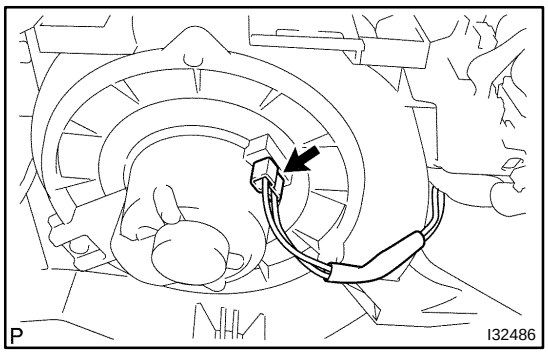

(d) Connect the connector to the blower w/ fan motor sub–assy.

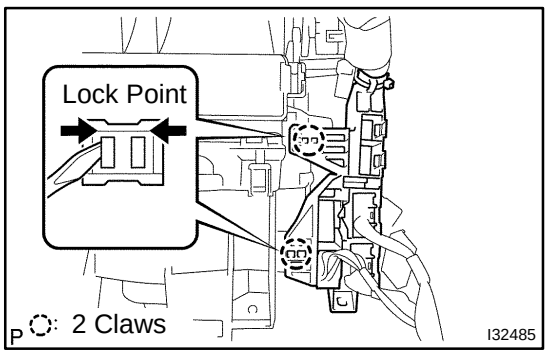

(e) Install the 2 fitting claws, connect the connector holder.

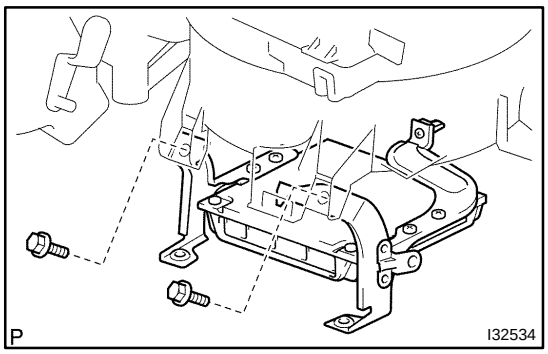

40. INSTALL ECM

(a) Install the ECM with the 2 bolts.
Torque: 3.0 N·m (30 kgf·cm, 26 in.·lbf)

NOTICE:

- **Do not apply excessive force to the connecter of the ECM.**
- **Do not give any impact to the ECM.**

41. INSTALL INSTRUMENT PANEL SUB–ASSY LOWER (See page 71–10)

42. INSTALL HEATER CONTROL & ACCESSORY ASSY (See page 55–13)

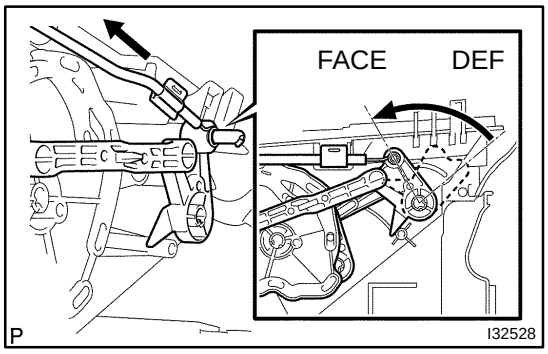

43. INSTALL DEFROSTER DAMPER CONTROL CABLE SUB–ASSY

(a) Set the arm in FACE position.

(b) Install the inner cable end to the control lever with the arm in FACE position.

(c) Install the outer cable to the cable clamp while slightly pressing it in the direction of the arrow.

NOTICE:

- **Be careful not to bend the cable wire.**
- **If the cable wire bends, the heater control & accessory assy operationality becomes worse.**

HINT:

Operating the mode control lever, check that it properly stops at both ends of FACE and DEF and no recoil is identified.

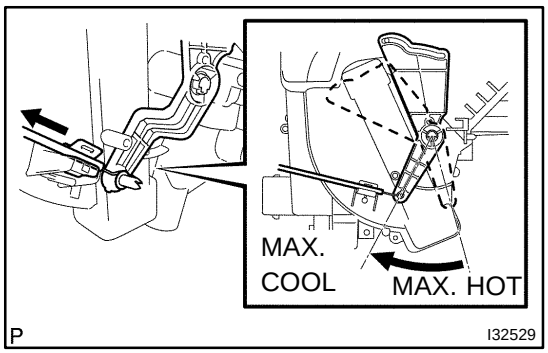

44. INSTALL AIRMIX DAMPER CONTROL CABLE SUB–ASSY

(a) Set the arm in MAX. COOL position.

(b) Install the inner cable end to the control lever with the arm in MAX. COOL position.

(c) Install the outer cable to the cable clamp while slightly pressing it in the direction of the arrow.

NOTICE:

- **Be careful not to bend the cable wire.**
- **If the cable wire bends, the heater control & accessory assy operationality becomes worse.**

HINT:

Operating the temperature control lever, check that it properly stops at both ends of MAX. COOL and MAX. HOT and no recoil is identified.

45. REMOVE HEATER CONTROL & ACCESSORY ASSY (See page 55–13)

46. INSTALL INSTRUMENT PANEL SUB–ASSY UPPER (See page 71–10)

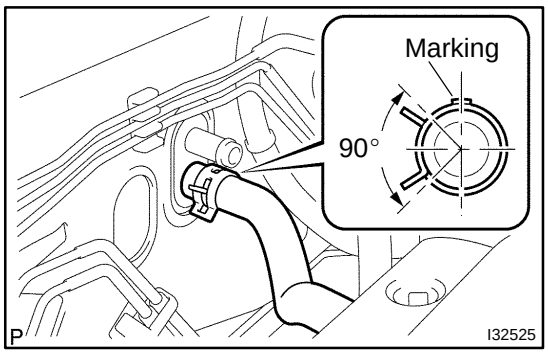

47. INSTALL HEATER OUTLET WATER HOSE

(a) Using pliers, grip the claws of clip and slide the clip and connect the heater outlet water hose.

NOTICE:

- **The clip is installing so that the projection of the clip may go into the 90° to a direction position.**
- **Marking of hose is installed upward by vehicle.**

48. INSTALL HEATER INLET WATER HOSE

HINT:

Connect in the same way as the heater outlet water hose.

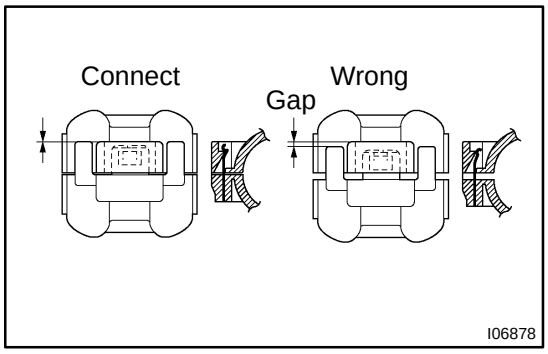

49. INSTALL COOLER REFRIGERANT SUCTION HOSE NO.1

(a) Lubricate a new O–ring with compressor oil and install them to the hose.

Compressor oil: ND–OIL 8 or equivalent

(b) Install the cooler refrigerant suction hose No. 1 and piping clamp.

HINT:

After connection, check the fitting for claw of the piping clamp.

50. INSTALL COOLER REFRIGERANT LIQUID PIPE A

(a) Lubricate a new O–ring with compressor oil and install them to the pipe.

Compressor oil: ND–OIL 8 or equivalent

(b) Install the cooler refrigerant liquid pipe A and piping clamp.

HINT:

After connection, check the fitting for claw of the piping clamp.

51. ADD COOLANT (See page 16–7)

52. CHECK ENGINE COOLANT LEAK (See page 16–1)

53. CHARGE REFRIGERANT (See page 55–11)

SST 07110–58060 (07117–58060, 07117–58070, 07117–58080, 07117–58090, 07117–78050, 07117–88060, 07117–88070, 07117–88080), 07117–48130, 07117–48140

Specified amount: 490 ± 30 g (17.28 ± 1.06 oz.)

54. WARM UP ENGINE

55. INSPECT LEAKAGE OF REFRIGERANT (See page 55–11)

COOLER COMPRESSOR ASSY

COMPONENTS

550IZ–01

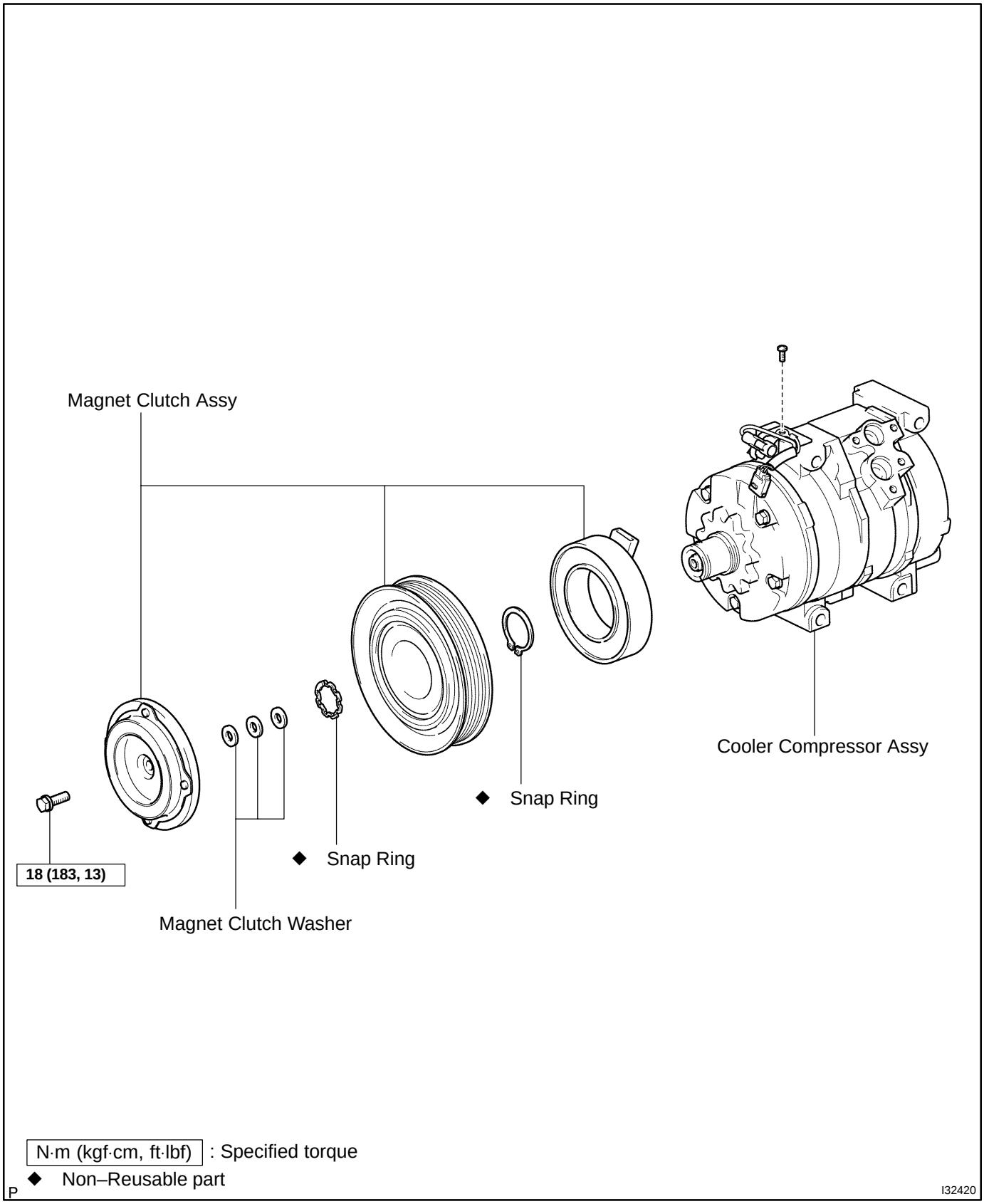

550J0–01

REPLACEMENT

HINT:

COMPONENTS: See page 55–33

1. DISCHARGE REFRIGERANT FROM REFRIGERATION SYSTEM (See page 55–11)

SST 07110–58060 (07117–58080, 07117–58090, 07117–78050, 07117–88060, 07117–88070, 07117–88080)

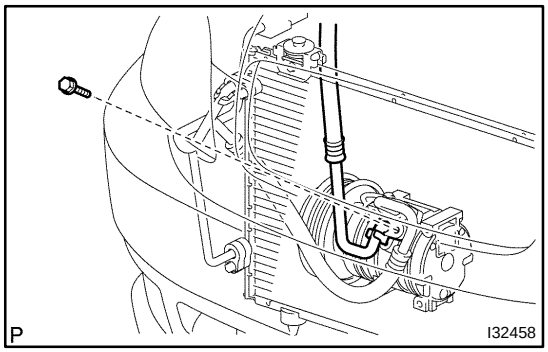

2. DISCONNECT COOLER REFRIGERANT SUCTION HOSE NO.1

(a) Remove the bolt and disconnect the cooler refrigerant suction hose No. 1 from the compressor and magnetic clutch.

(b) Remove the O–ring from the cooler refrigerant suction hose No. 1.

NOTICE:

Seal the opening of the disconnected parts using vinyl tape to prevent moisture and foreign matter from entering.

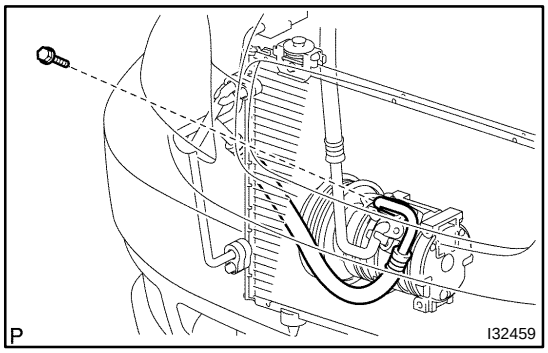

3. DISCONNECT DISCHARGE HOSE SUB–ASSY

(a) Remove the bolt and disconnect the discharge hose sub–assy from the compressor and magnetic clutch.

(b) Remove the O–ring from the discharge hose sub–assy.

NOTICE:

Seal the opening of the disconnected parts using vinyl tape to prevent moisture and foreign matter from entering.

4. REMOVE ENGINE UNDER COVER RH

5. REMOVE FAN AND GENERATOR V BELT (See page 14–4)

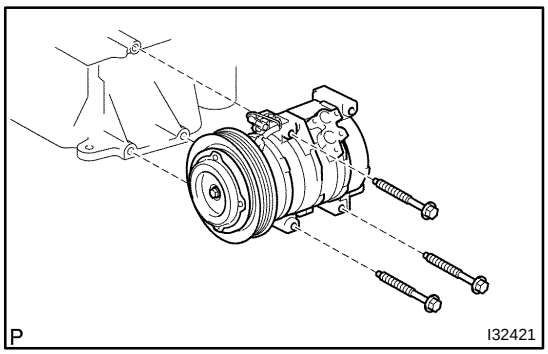

6. REMOVE COMPRESSOR AND MAGNETIC CLUTCH

(a) Disconnect the connector.

(b) Remove the 3 bolts and compressor and magnetic clutch.

7. REMOVE MAGNET CLUTCH ASSY

(a) Place the compressor and magnetic clutch in vise.

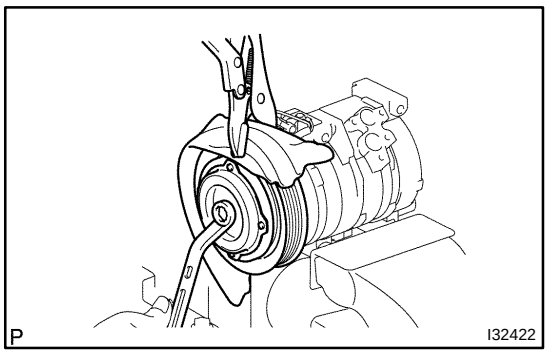

(b) Using a vise pliers, hold the magnet clutch hub.
(c) Remove the bolt, magnet clutch hub and magnet clutch washer.

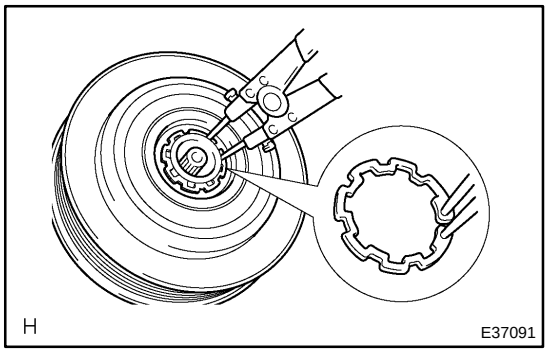

(d) Using a snap ring expander, remove the snap ring and magnet clutch rotor.
(e) Remove the screw, disconnect the connector.

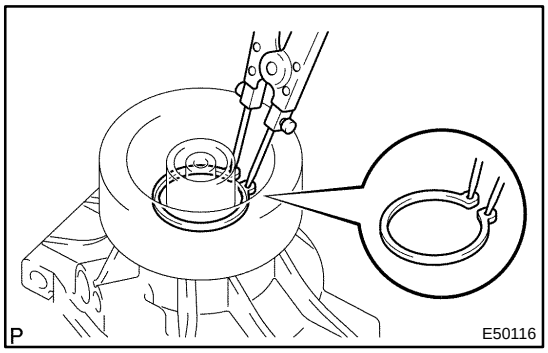

(f) Using a snap ring expander, remove the snap ring and magnet clutch starter.

8. REMOVE COOLER COMPRESSOR ASSY

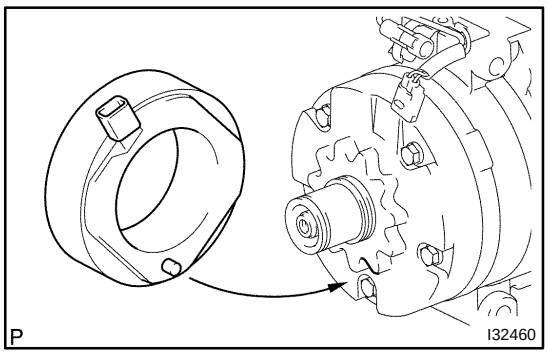

9. INSTALL MAGNET CLUTCH ASSY

(a) Matching the parts shown in the illustration, install the magnet clutch starter.

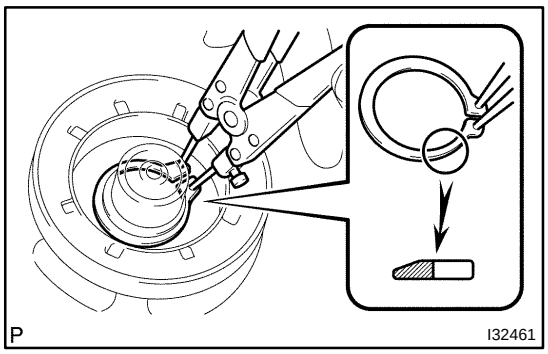

(b) Using a snap ring expander, install a new snap ring with the chamfered side facing up.
(c) Install the screw, connect the connector.

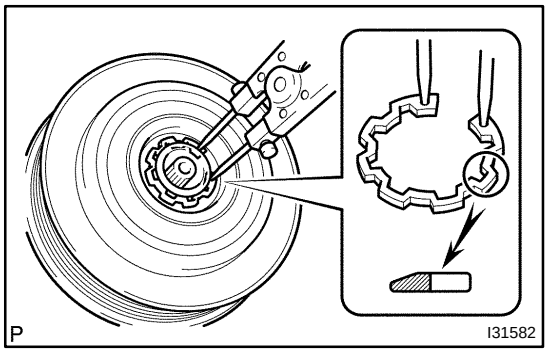

(d) Using a snap ring expander, install the magnet clutch rotor and a new snap ring with the chamfered side facing up.
(e) Install the magnet clutch washer and magnet clutch hub.

NOTICE:

Do not change the combination of the magnet clutch washers used before disassembly.

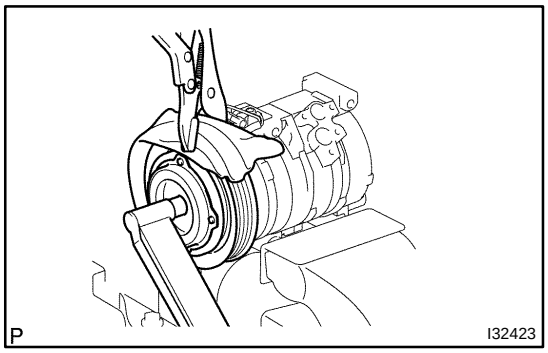

(f) Using a vise pliers, hold the magnet clutch hub and install the bolt.

Torque: 18 N·m (183 kgf·cm, 13 ft·lbf)

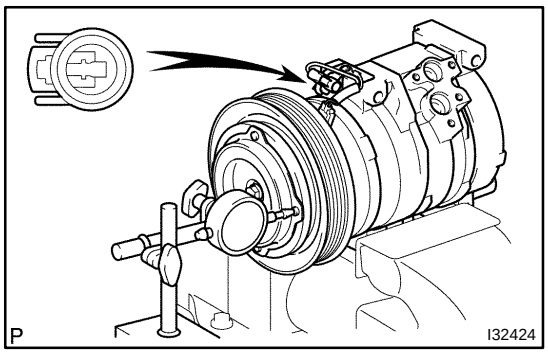

10. INSPECT MAGNETIC CLUTCH CLEARANCE

(a) Set the dial indicator to the magnet clutch hub.
(b) Connect the battery positive lead to the terminal 1 of magnet clutch connector and the negative lead to the earth wire. Turn on and off the magnet clutch and measure the clearance.

Standard clearance:

0.35 – 0.60 mm (0.013 – 0.023 in.)

If the measured value is out of the standard range, remove the magnet clutch hub and adjust it with magnet clutch washers.

NOTICE:

Adjustment shall be performed with 3 or less magnet clutch washers.

11. INSPECT COMPRESSOR OIL

(a) When replacing the compressor and magnetic clutch with new one, after gradually removing the refrigerant gas from the service valve, drain the following amount of oil from the new compressor and magnetic clutch before installation.

Standard:

(Oil capacity inside new compressor and magnetic clutch: 120 + 15 cc (4.0 + 0.5 fl. oz.)) – (Remaining oil amount in the removed compressor and magnetic clutch) = (Oil amount to be removed when replacing)

NOTICE:

- **When checking the compressor oil level, observe the precautions on the cooler removal/installation.**
- **Because compressor oil remains in the pipes of the vehicle, if a new compressor and magnetic clutch is installed without removing some oil inside, the oil amount becomes too much, preventing heat exchange in the refrigerant cycle and causing refrigerant failure.**
- **If the remaining oil in the removed compressor and magnetic clutch is too small in volume, check for oil leakage.**
- **Be sure to use ND–OIL8 for compressor oil.**

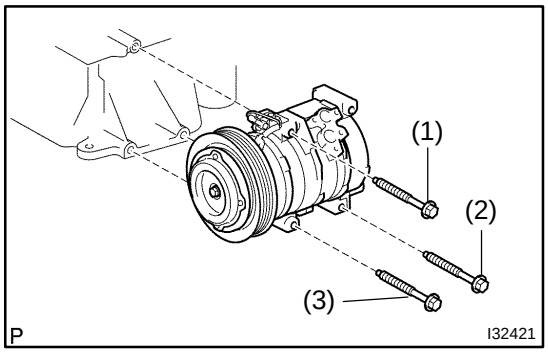

12. INSTALL COMPRESSOR AND MAGNETIC CLUTCH

(a) Install the compressor and magnetic clutch with the 3 bolts.

Toque: 29 N·m (295 kgf·cm, 21 ft·lbf)

NOTICE:

Tighten the bolts in following order shown in the illustration to install the compressor and magnetic clutch.

(b) Connect the connector.

13. INSTALL DISCHARGE HOSE SUB–ASSY

(a) Remove the attached vinyl tape from the hose.

(b) Sufficiently apply compressor oil to the new O–ring and fit surface of the compressor and magnetic clutch.

Compressor oil: ND–OIL8 or equivalent

(c) Install a O–ring to the discharge hose sub–assy.

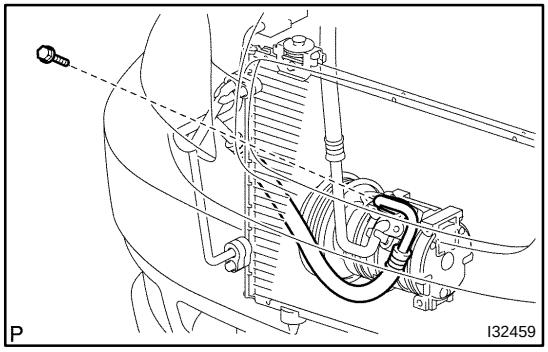

(d) Install the discharge hose sub–assy to the compressor and magnetic clutch with the bolt.

Torque: 9.8 N·m (100 kgf·cm, 87 in.·lbf)

14. INSTALL COOLER REFRIGERANT SUCTION HOSE NO.1

(a) Remove the attached vinyl tape from the hose.

(b) Sufficiently apply compressor oil to the new O–ring and fit surface of the compressor and magnetic clutch.
Compressor oil: ND–OIL8 or equivalent

(c) Install a O–ring to the cooler refrigerant suction hose No. 1.

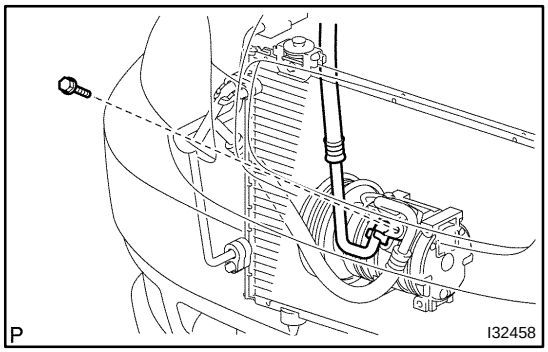

(d) Install the cooler refrigerant suction hose No. 1 to the compressor and magnetic clutch with the bolt.
Torque: 9.8 N·m (100 kgf·cm, 87 in.·lbf)

15. CHARGE REFRIGERANT (See page 55–11)
SST 07110–58060 (07117–58060, 07117–58070, 07117–58080, 07117–58090, 07117–78050, 07117–88060, 07117–88070, 07117–88080), 07117–48130, 07117–48140
Specified amount: 490 ± 30 g (17.28 ± 1.06 oz.)

16. WARM UP ENGINE

17. INSPECT LEAKAGE OF REFRIGERANT (See page 55–11)

HEATER CONTROL & ACCESSORY ASSY

550IT–01

REPLACEMENT

1. **REMOVE CONSOLE PANEL UPPER (See page 71–10)**
2. **REMOVE INSTRUMENT CLUSTER FINISH PANEL (See page 71–10)**

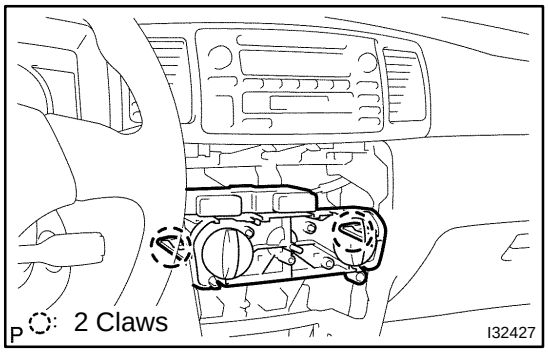

3. **REMOVE HEATER CONTROL & ACCESSORY ASSY**

(a) Release the 2 fitting claws and pull out the heater control & accessory assy.

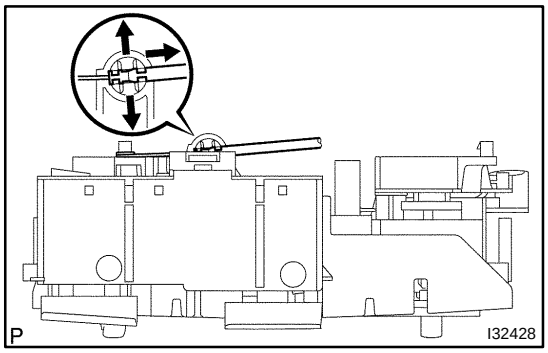

(b) Using a screwdriver, open the claw of the cable clamp and disconnect the defroster damper control cable.

NOTICE:

- **Be careful not to bend the cable wire.**
- **If the cable wire bends, the heater control & accessory assy operationality becomes worse.**

HINT:

Tape the screwdriver tip before use.

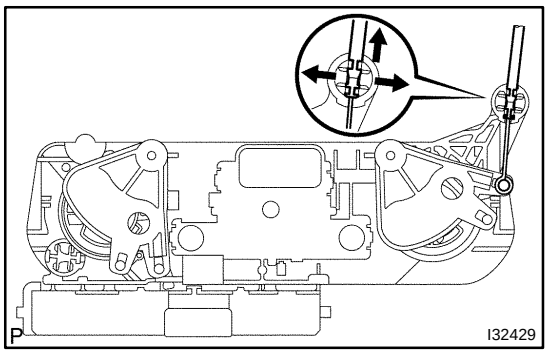

(c) Using a screwdriver, open the claw of the cable clamp and disconnect the air mix damper control cable.

NOTICE:

- **Be careful not to bend the cable wire.**
- **If the cable wire bends, the heater control & accessory assy operationality becomes worse.**

HINT:

Tape the screwdriver tip before use.

(d) Disconnect the connector, remove the heater control & accessory assy.

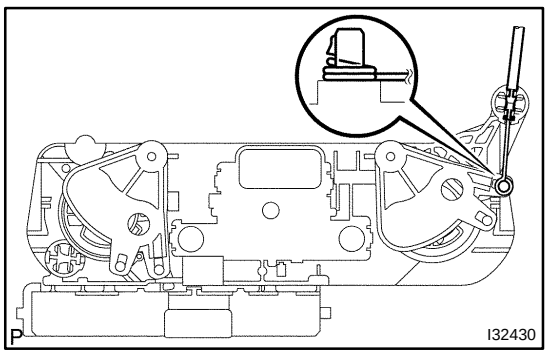

4. **INSTALL HEATER CONTROL & ACCESSORY ASSY**

(a) Install the inner cable end of the air mix damper control cable to the heater control lever.

(b) Install the outer cable of the air mix damper control cable to the cable clamp.

NOTICE:

- **Be careful not to bend the cable wire.**
- **If the cable wire bends, the heater control & accessory assy operationality becomes worse.**

HINT:

- Operating the heater control knob and check that it properly stops at both ends of MAX. COOL and MAX. HOT and no recoil is identified.
- Check that the outer cable should not be disengaged (moved) from the heater control & accessory assy when the cable is pulled.

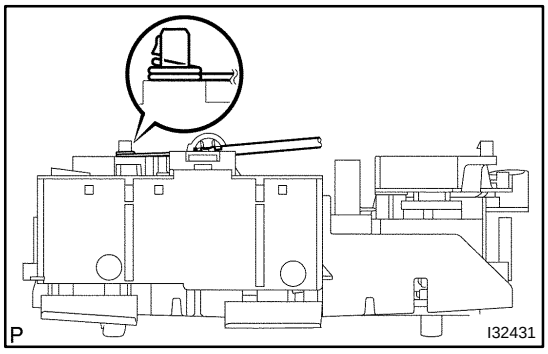

(c) Install the inner cable end of the defroster damper control cable to the heater control lever.

(d) Install the outer cable of the defroster damper control cable to the cable clamp.

NOTICE:

- **Be careful not to bend the cable wire.**
- **If the cable wire bends, the heater control & accessory assy operationality becomes worse.**

HINT:

- Operating the heater control knob and check that it properly stops at both ends of FACE and DEF and no recoil is identified.
- Check that the outer cable should not be disengaged (moved) from the heater control & accessory assy when the cable is pulled.

(e) Connect the connector, install the heater control & accessory assy.

550IP–01

INSPECTION

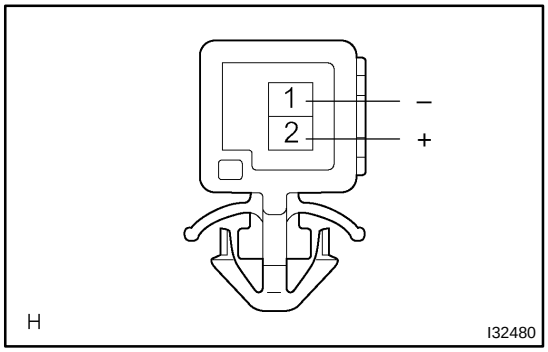

1. COOLER THERMISTOR NO.1

(a) Check resistance between terminals 1 and 2 of cooler thermistor No. 1 at each temperature, as shown in the chart.

Resistance:

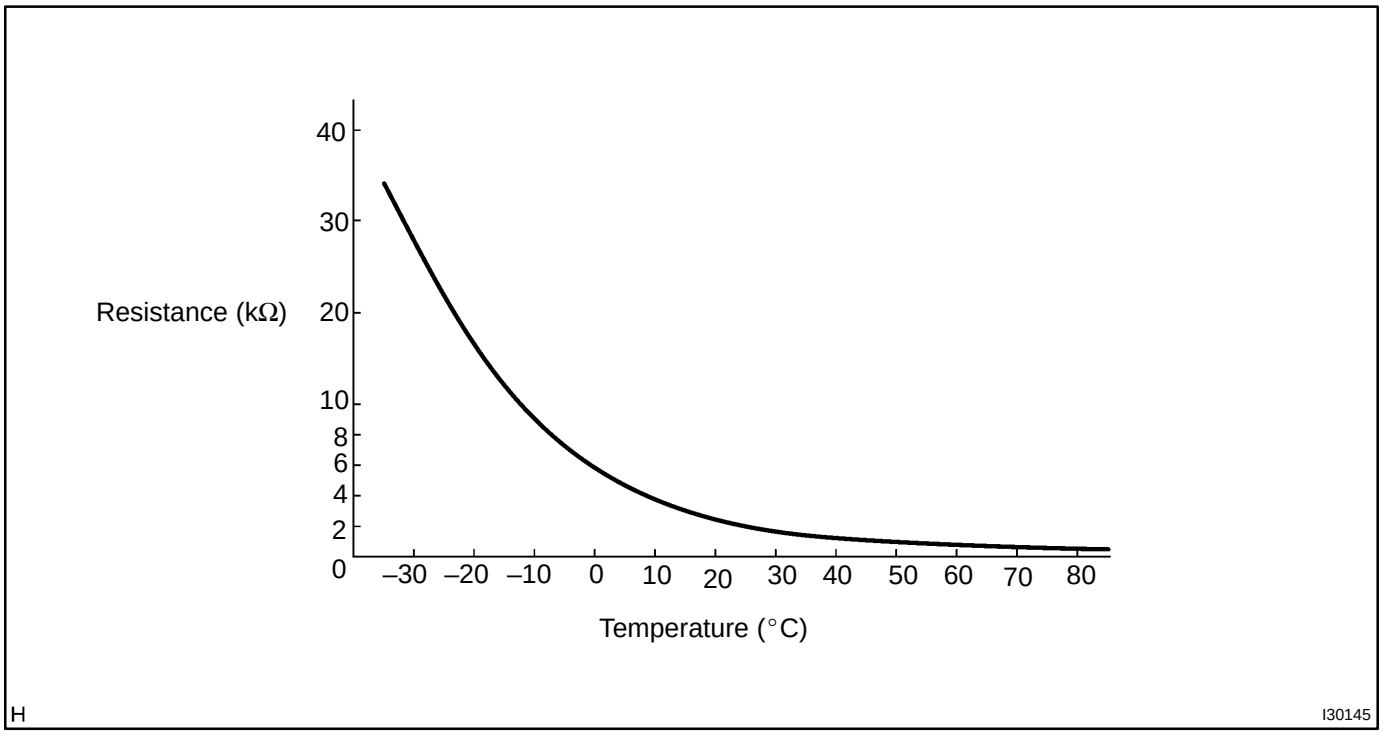

If resistance value is not as specified, replace the sensor.

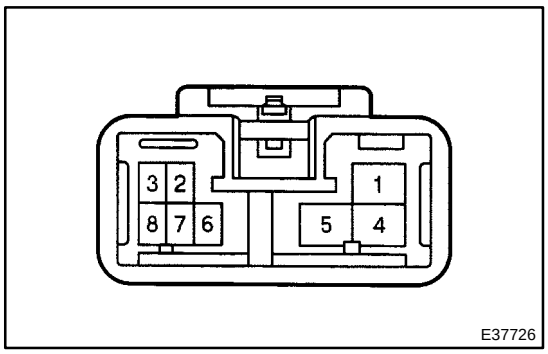

2. COOLER AND ACCESSORY ASSY

(a) Inspect blower switch continuity.

Condition / Circuit	Tester connection	Specified condition
OFF	–	No continuity
LO	1 – 8	Continuity
M1	1 – 6 – 8	Continuity
M2	1 – 5 – 8	Continuity
HI	1 – 4 – 8	Continuity

If continuity is not as specified, replace the air conditioner control assy.

(b) Inspect illumination operation.

Connect the positive (+) lead from the battery to terminal 2 and negative (–) lead to terminal 3 then check that the illuminations light up.

If there is bulb not light up, replace the bulb.

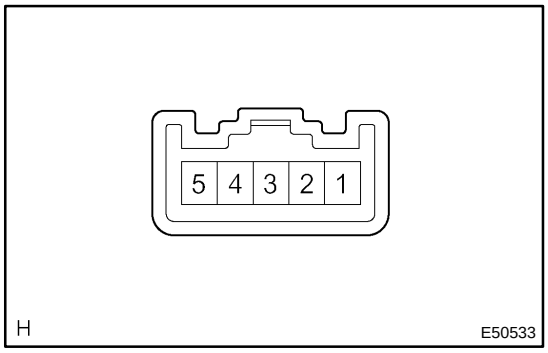

3. COOLER SWITCH HOLE COVER

(a) Inspect switch continuity.

Check the continuity between terminals while switch is pressed, as shown in the chart.

Tester connection	Specified condition
2 – 5	Continuity

If continuity is not as specified, replace the cooler switch.

(b) Inspect illumination operation.

Connect the positive (+) lead from the battery to terminal 4 and negative (–) lead to terminal 3 then check that the illuminations light up.

If operation is not as specified, replace the cooler switch.

(c) Inspect indicator operation.

(1) Connect the positive (+) lead from the battery to terminal 2 and the negative (–) lead to terminal 1.

(2) Push the A/C button in and then check that the indicator lights up.

If operation is not as specified, replace the cooler switch.

(d) Inspect dimming operation

(1) Connect the positive (+) lead from the battery to terminal 2 and the negative (–) lead to terminal 1 while press the switch.

(2) Connect the positive (+) lead from battery to terminal 4 and then check that the indicator dims.

If operation is not as specified, replace the cooler switch.

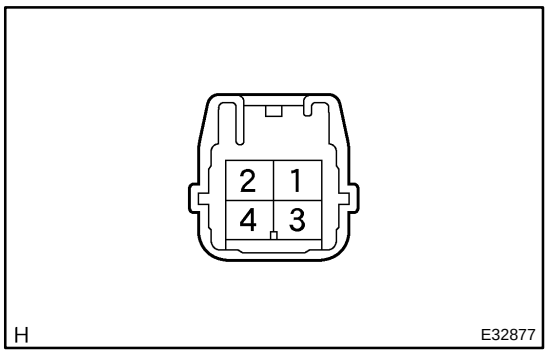

4. BLOWER RESISTOR

(a) Measure resistance between terminals, as shown in the chart below.

Tester connection	Specified condition
1 – 2	1.398 – 1.605 Ω
1 – 3	0.465 – 0.535 Ω
1 – 4	3.069 – 3.531 Ω

If resistance is not as specified, replace the blower resistor.

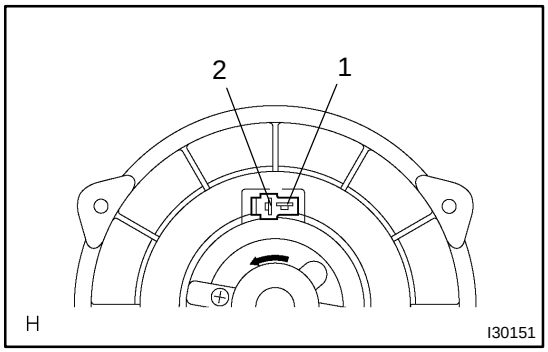

5. BLOWER W/FAN MOTOR SUB–ASSY

(a) Connect the positive (+) lead from the battery to terminal 2 and negative (–) to terminal 1, then check that the motor operation smoothly.

If operation is not as specified, replace the blower motor.

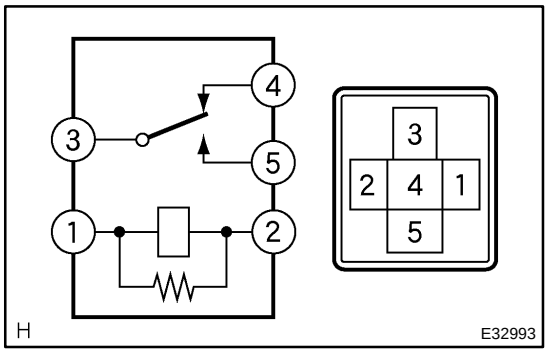

6. HEATER BLOWER MOTOR RELAY ASSY

Condition	tester connection	Specified condition
constant	1 – 2 3 – 4	Continuity
Apply B+ between terminals 1 and 2.	3 – 5	Continuity

If continuity is not as specified, replace the heater blower motor relay.

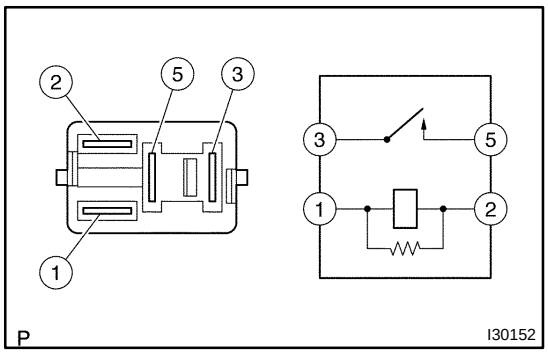

7. MAGNET–CLUTCH RELAY

Condition	tester connection	Specified condition
constant	1 – 2	Continuity
Apply B+ between terminals 1 and 2.	3 – 5	Continuity

If continuity is not as specified, replace the magnet–clutch relay.

550IO–01

ON–VEHICLE INSPECTION

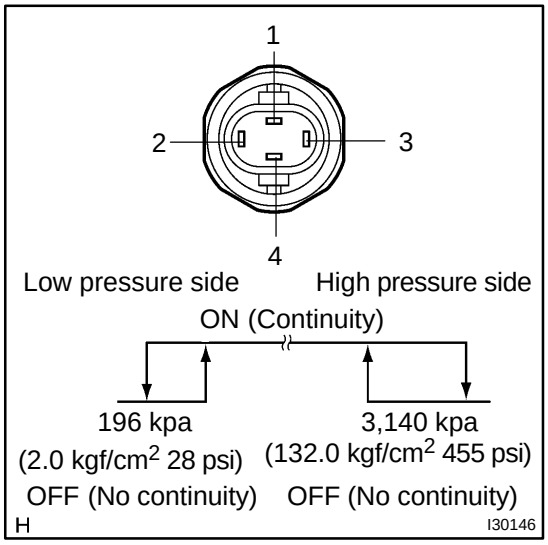

1. INSPECT PRESSURE SWITCH NO.1.

(a) Magnetic clutch control:
Inspect pressure switch operation.
(1) Set on the manifold gauge set.
(2) Connect the positive (+) lead from the ohmmeter to terminal 4 and the negative (–) lead to terminal 1.
(3) Check continuity between terminals when refrigerant pressure is changed, as shown in the illustration.

If operation is not as specified, replace the pressure switch.

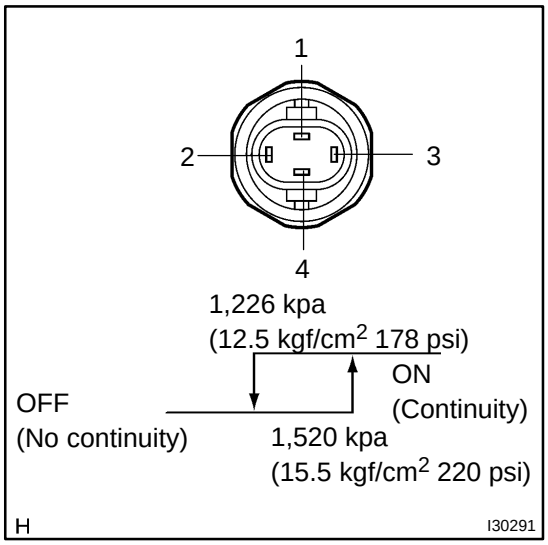

(b) Cooling fan control:
Inspect pressure switch operation.
(1) Connect the positive (+) lead from the ohmmeter to terminal 2 and the negative (–) lead to terminal 3.
(2) Check continuity between terminals when refrigerant pressure is changed, as shown in the illustration.

If operation is not as specified, replace the pressure switch.

2. COOLER COMPRESSOR ASSY W/MAGNETIC CLUTCH

(a) Connect the positive (+) lead from the battery to terminal and the negative (–) lead to the body ground.
(b) Check that the magnetic clutch energized.

If operation is not as specified, replace the magnet clutch assy.

AIR CONDITIONING SYSTEM

PRECAUTION

550IN–01

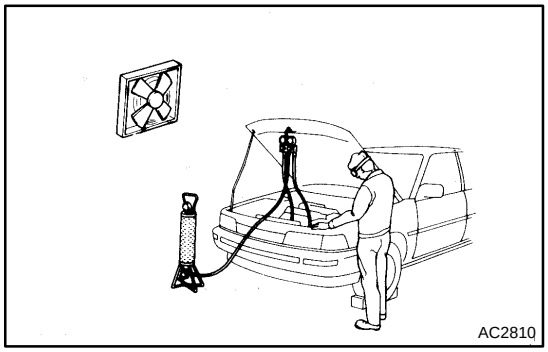

1. DO NOT HANDLE REFRIGERANT IN AN ENCLOSED AREA OR NEAR AN OPEN FLAME

2. ALWAYS WEAR EYE PROTECTION

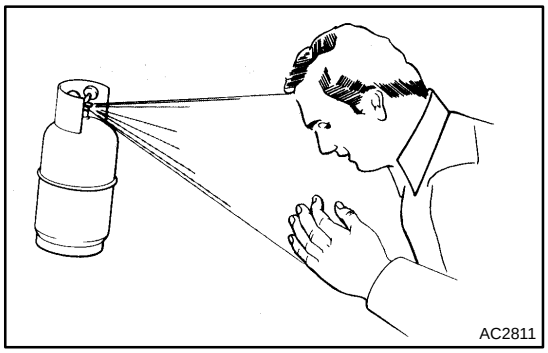

3. BE CAREFUL NOT TO GET LIQUID REFRIGERANT IN YOUR EYES OR ON YOUR SKIN

If liquid refrigerant gets in your eyes or on your skin.

(a) Wash the area with lots of cool water.

CAUTION:

Do not rub your eyes or skin.

(b) Apply clean petroleum jelly to the skin.

(c) Go immediately to a physician or hospital for professional treatment.

4. NEVER HEAT CONTAINER OR EXPOSE IT TO NAKED FLAME

5. BE CAREFUL NOT TO DROP CONTAINER AND NOT TO APPLY PHYSICAL SHOCKS TO IT

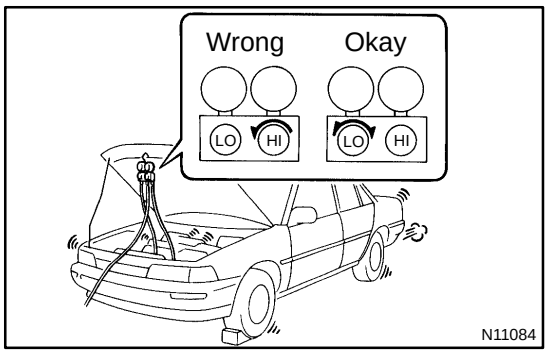

6. DO NOT OPERATE COMPRESSOR WITHOUT ENOUGH REFRIGERANT IN REFRIGERANT SYSTEM

If there is not enough refrigerant in the refrigerant system oil lubrication will be insufficient and compressor burnout may occur, so take care to avoid this, necessary care should be taken.

7. DO NOT OPEN HIGH PRESSURE MANIFOLD VALVE WHILE COMPRESSOR IS OPERATING

If the high pressure valves opened, refrigerant flows in the reverse direction and could cause the charging cylinder to rupture, so open and close the only low pressure valve.

8. BE CAREFUL NOT TO OVERCHARGE SYSTEM WITH REFRIGERANT

If refrigerant is overcharged, it causes problems such as insufficient cooling, poor fuel economy, engine overheating etc.

REFRIGERANT

ON–VEHICLE INSPECTION

550IQ–01

1. INSPECT REFRIGERANT PRESSURE WITH MANIFOLD GAUGE SET

(a) This is a method in witch the trouble is located by using a manifold gauge set. Read the manifold gauge pressure when the these conditions are established.

Test conditions:

- Temperature at the air inlet with the switch set at RECIRC is 30 – 35 °C (86 – 95 °F)
- Engine running at 1500 rpm
- Blower speed control switch at ”HI” position
- Temperature control dial at ”COOL” position
- A/C switch ON
- Fully open doors

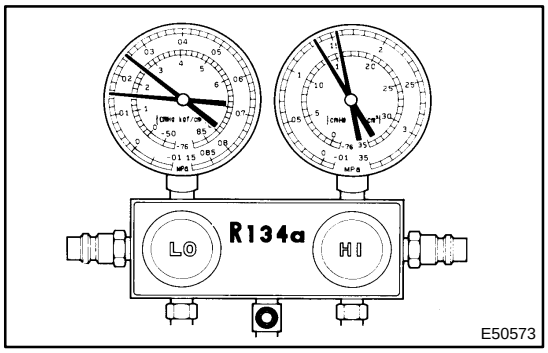

E50573

(1) Normally functioning refrigeration system.

Gauge reading:

Low pressure side:

0.15 – 0.25 MPa (1.5 – 2.5 kgf/cm^2)

High pressure side:

1.37 – 1.57 MPa (14 – 16 kgf/cm^2)

(2) Moisture present in refrigeration system.

Condition : Periodically cools and then fails to cool

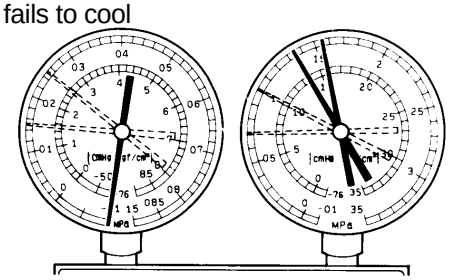

I22117

Symptom	Probable cause	Diagnosis	Remedy
During operation, pressure on low pressure side sometimes become a vacuum and sometime normal	Moisture in refrigerating system freezes at expansion valve orifice causing a temporary stop of cycle, however, when it melts, normal state is restored.	• Drier in oversaturected state • Moisture in refrigerating system freezes at expansion valve orifice and blocks circulation of refrigerant	(1) Replace condenser (2) Remove moisture in cycle by repeatedly evacuating air (3) Supply proper amount of new refrigerant

(3) Insufficient cooling

Condition: Cooling system does not function eftectively.

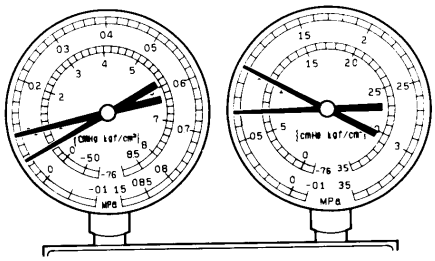

I22118

Symptom	Probable cause	Diagnosis	Corrective Actions
• Pressure low on both low and high pressure sides • Insufficient cooling performance	Gas leakage in refrigeration system	• Insufficient refrigerant • Refrigerant leaking	(1) Check for gas leakage and repair if necessary (2) Supply proper amount of new refrigerant (3) If indicated pressure value is close to a 0 when connected to gauge, create the vacuum after inspecting and repairing location of leak

(4) Poor circulation of refrigerant

Condition: Cooling system close not function effectively.

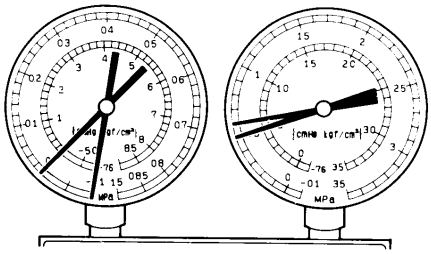

I22119

Symptom	Probable cause	Diagnosis	Corrective Action
• Pressure low on both low and high pressure sides • Frost on pipe from condenser to unit	Refrigerant flow obstructed by dirt in receiver	Receiver clogged	Replace condenser

(5) Refrigerant does not circulate

Condition: Cooling system does not function. (Sometimes it way function)

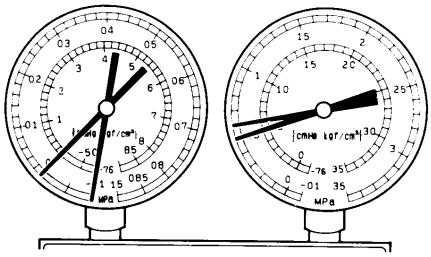

I22120

Symptom	Probable cause	Diagnosis	Corrective Actions
• Vacuum indicated on low pressure side, very low pressure indicated on high pressure side • Frost or dew seen on piping before and after receiver/ drier or expansion valve	• Refrigerant flow obstructed by moisture or dirt in refrigerating system • Refrigerant flow obstructed by gas leaked from expansion valve	Refrigerant does not circulate	(1) Check expansion valve (2) Clean out dirt in expansion valve by air blowing (3) Replace condenser (4) Evaporate air and supply proper amount of new refrigerant. (5) For gas leakage from expansion valve, replace expansion valve

(6) Refrigerant overcharged or insufficient cooling of condenser

Condition: Cooling system does not function dftectively.

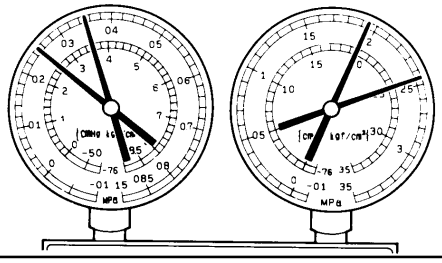

I22121

Symptom	Probable cause	Diagnosis	Remedy
• Pressure too high on both low and high pressure sides	• Unable to develop sufficient performance due to excessive use of refrigerating system • Insufficient cooling of condenser	• Excessive refrigerant in cycle→too much refrigerant supplied • Condenser cooling insufficient→condenser fins clogged at cooling fan	(1) Clean condenser (2) Check cooling fan with cooling fan motor operation (3) If (1) and (2) are in normal state, check amount of refrigerant and supply proper amount of refrigerant

(7) Air present in refrigeration system

Condition: Cooling system does not function.

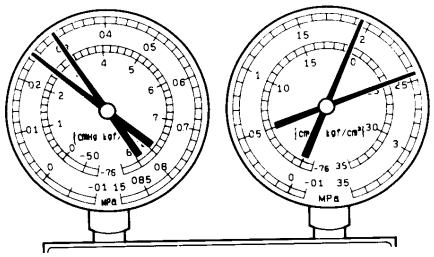

NOTE : These gauge indications are shown when the refrigerating system has been opens and the refrigerant charged without vacuum purging.

I22122

Symptom	Probable cause	Diagnosis	Corrective Actions
• Pressure too high on both low and high pressure sides • The low pressure piping too hot to the touch	Air entered in refrigerating system	• Air present in refrigerating system • Insufficient vacuum purging	(1) Check compressor oil to see if it is see if it is dirty or insufficient (2) Evacuate air and supply new refrigerant

(8) Expansion valve improperly

Condition: Refrigerant functions insufficient.

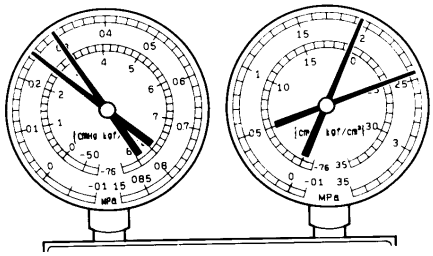

I22123

Symptom	Probable cause	Diagnosis	Corrective Actions
• Pressure too high on both low and high pressure sides • Frost or large amount of dew on piping on low pressure side	Trouble in expansion valve	• Excessive refrigerant in low pressure piping • Expansion valve opened too wide	Check expansion valve

(9) Defective compression compressor

Condition : Refrigerant is not effective.

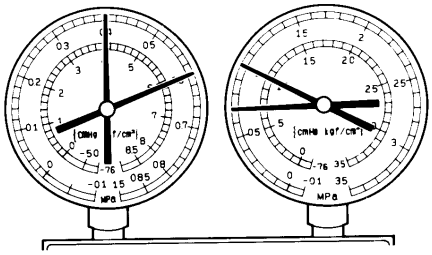

I22124

Symptom	Probable cause	Diagnosis	Corrective Actions
• Pressure too high on low high pressure sides • Pressure too low to on high pressure side	Internal leak in compressor	• Compression failure • Leakage from valve damaged or broken sliding parts	Repair or replace compressor

Gauge readings (Reference)

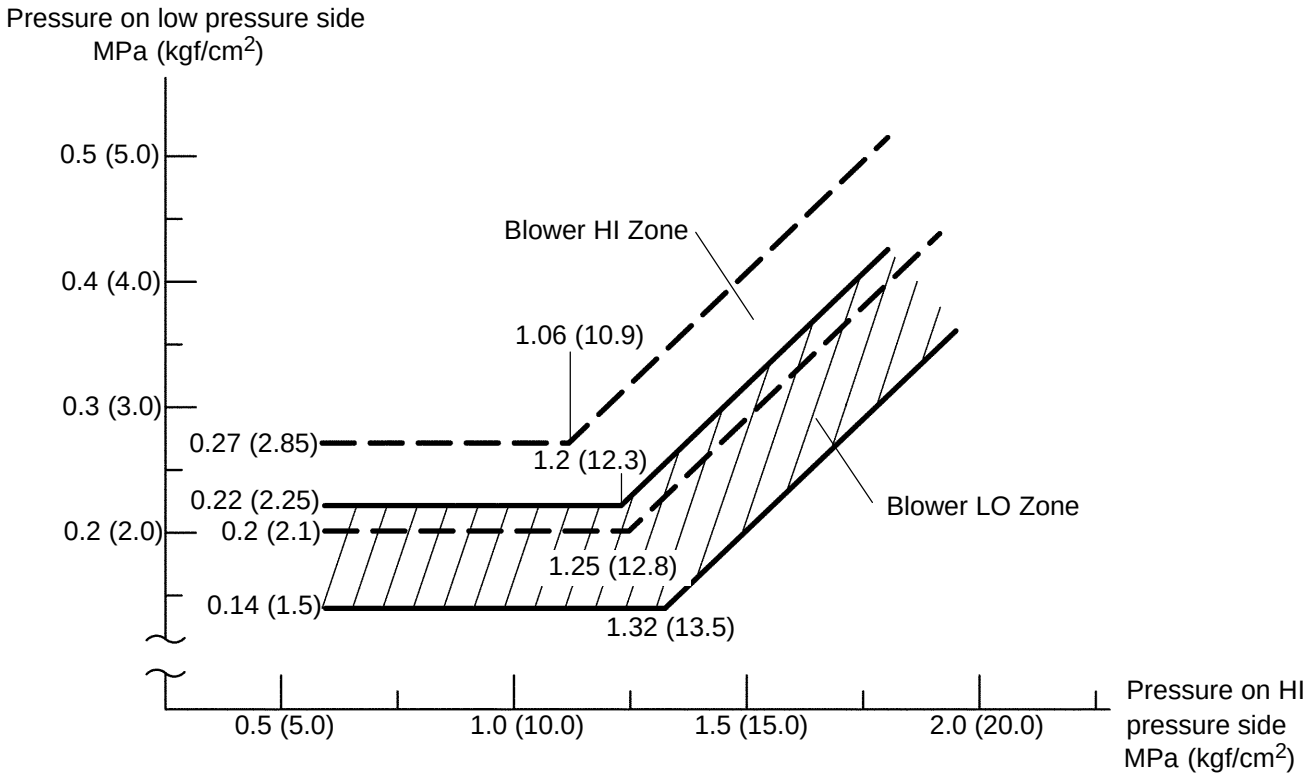

I30081

550IR–01

REPLACEMENT

1. DISCHARGE REFRIGERANT FROM REFRIGERATION SYSTEM

(a) Turn the A/C switch ON.

(b) Operating the cooler compressor at the engine rpm of approx. 1000 for 5 to 6 min., circulate the refrigerant and collect compressor oil remaining in each component into the cooler compressor as much as possible.

(c) Stop the engine.

(d) Let the refrigerant gas out.

SST 07110–58060 (07117–58080, 07117–58090, 07117–78050, 07117–88060, 07117–88070, 07117–88080)

2. CHARGE REFRIGERANT

(a) Using a vacuum pump, perform a vacuum pumping.

(b) Supply refrigerant, HFC–134a (R134a).

Standard: 490 ± 30 g (17.28 ± 1.06 oz.)

SST 07110–58060 (07117–58060, 07117–58070, 07117–58080, 07117–58090, 07117–78050, 07117–88060, 07117–88070, 07117–88080), 07117–48130, 07117–48140

3. WARM UP ENGINE

4. INSPECT LEAKAGE OF REFRIGERANT

(a) Using a gas leak detector, check for leakage of refrigerant.

REFRIGERANT LINE

COMPONENTS

550IS–01

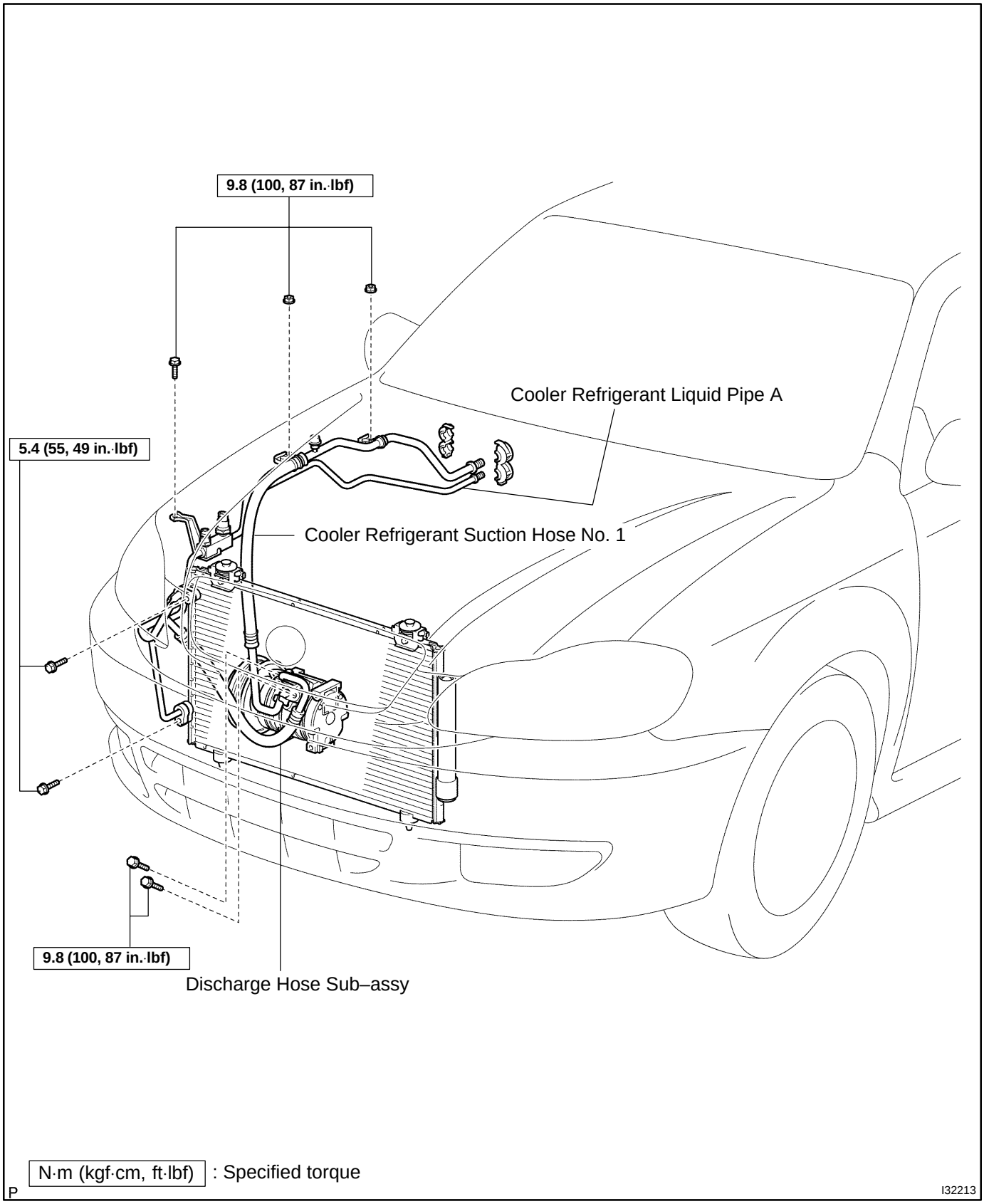

550IX–01

COMPONENTS

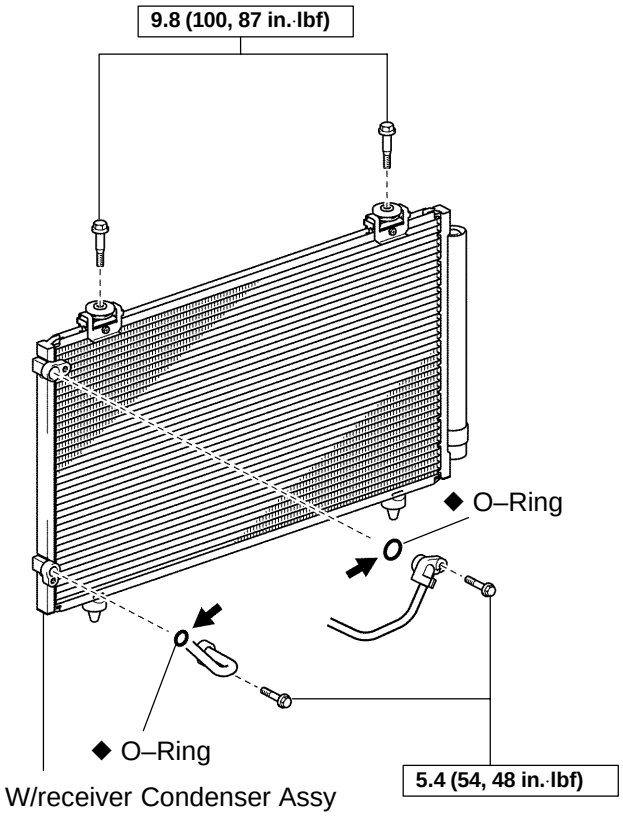

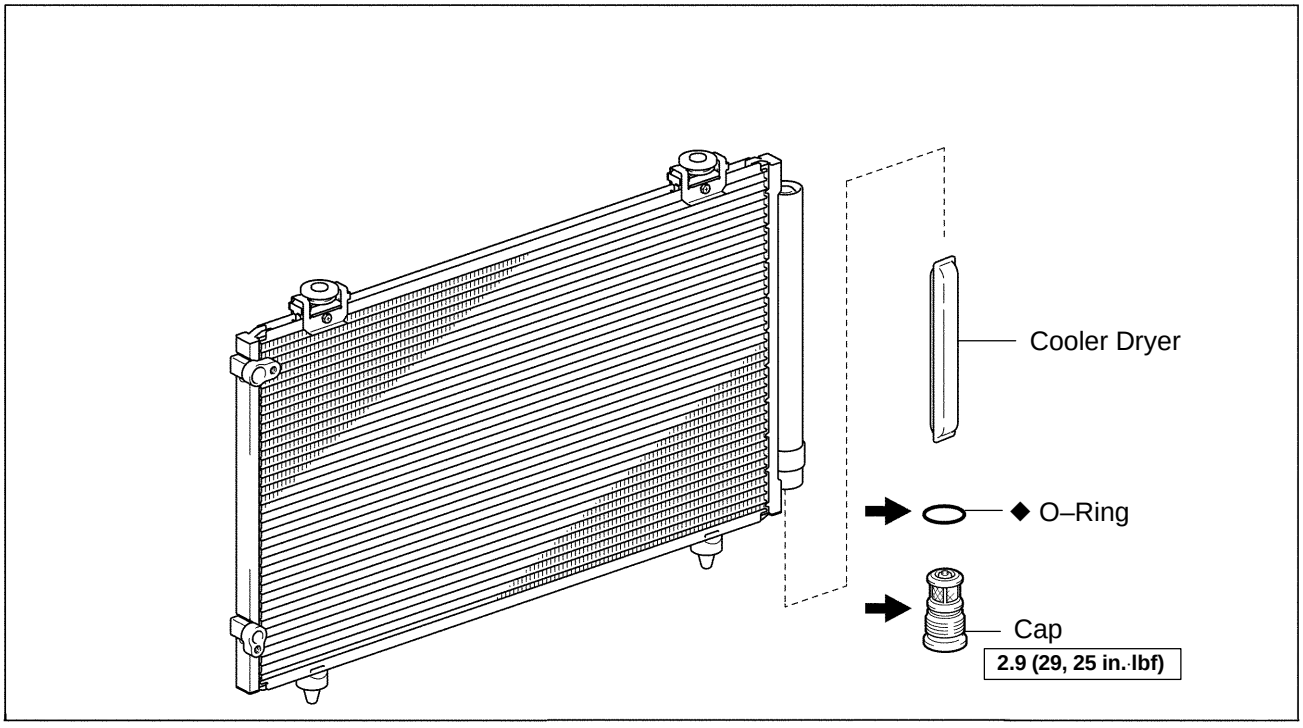

N·m (kgf·cm, ft·lbf) : Specified torque

⬅ Compressor Oil ND–OIL 8 or equivalent

◆ Non–reusable part

I32505

W/RECEIVER CONDENSER ASSY

550IW–01

ON–VEHICLE INSPECTION

1. INSPECT W/RECEIVER CONDENSER ASSY

(a) If a fin of the w/receiver condenser assy is dirty, clean it with water and dry it with compressor air.

NOTICE:

Do not damage the fin of the w/receiver condenser assy.

(b) If a fin of the w/receiver condenser assy is bent, make it straight using a screwdriver or pliers.

2. INSPECT W/RECEIVER CONDENSER ASSY FOR LEAKAGE OF REFRIGERANT

(a) Using a halogen leak detector, check pipe joints for gas leakage.

(b) If gas leakage is detected in a joint, check the torque of the joint.

550IY–01

OVERHAUL

HINT:

COMPONENTS: See page 55–40

1. DISCHARGE REFRIGERANT FROM REFRIGERATION SYSTEM (See page 55–11)

SST 07110–58060 (07117–58080, 07117–58090, 07117–78050, 07117–88060, 07117–88070, 07117–88080)

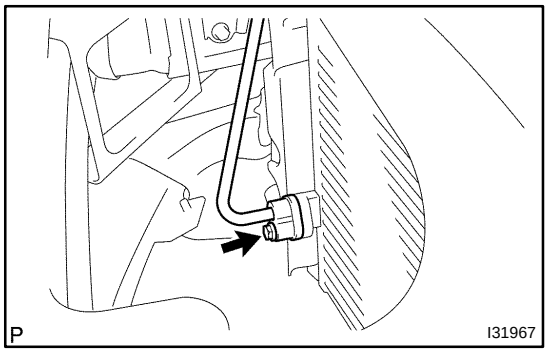

2. DISCONNECT COOLER REFRIGERANT LIQUID PIPE A

(a) Remove the bolt and disconnect the cooler refrigerant liquid pipe A from the w/receiver condenser assy.

(b) Remove the O–ring from the cooler refrigerant liquid pipe A.

NOTICE:

Seal the opening of the disconnected parts using vinyl tape to prevent moisture and foreign matter from entering.

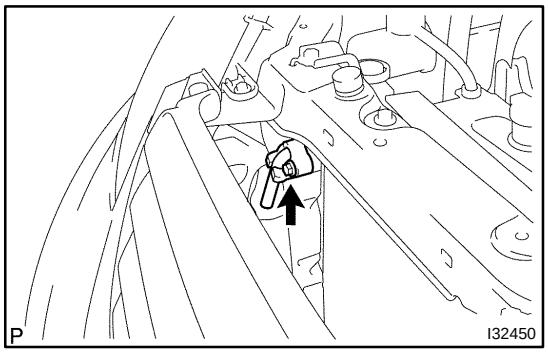

3. DISCONNECT DISCHARGE HOSE SUB–ASSY

(a) Remove the bolt and discharge hose sub–assy from the w/receiver condenser assy.

(b) Remove the O–ring from the discharge hose sub–assy.

NOTICE:

Seal the opening of the disconnected parts using vinyl tape to prevent moisture and foreign matter from entering.

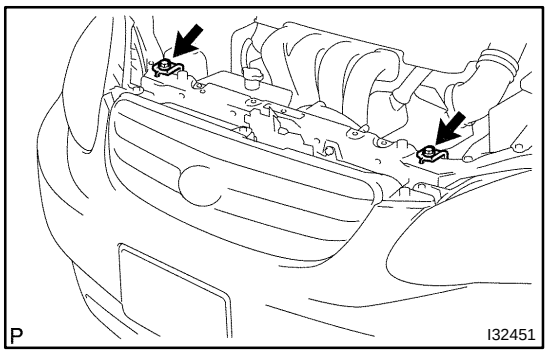

4. REMOVE W/RECEIVER CONDENSER ASSY

(a) Remove the 2 bolts and 2 radiator upper supports.

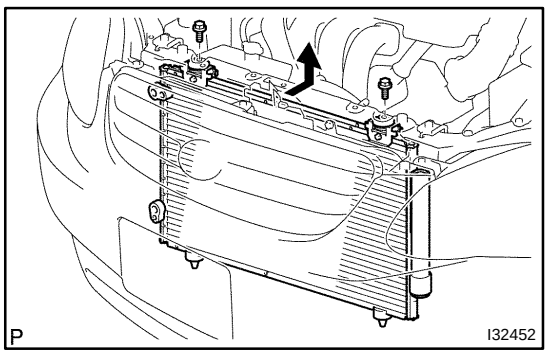

(b) Remove the 2 bolts.

(c) Slide the upper part of the radiator assy rearward to remove the w/receiver condenser assy.

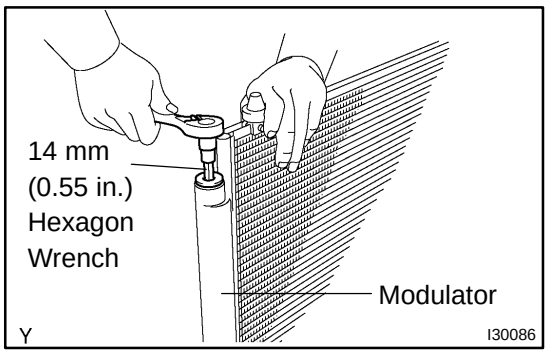

5. REMOVE COOLER DRYER

(a) Using a socket hexagon wrench 14 mm (0.55 in.), remove the cap from the modulator.

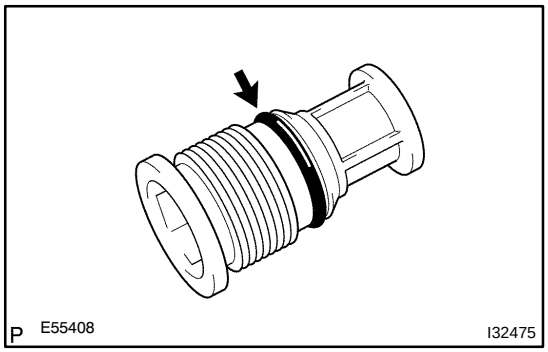

(b) Remove the O–ring from the cap.

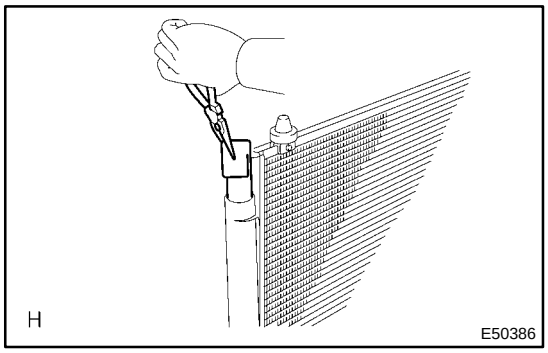

(c) Using pliers, remove the cooler dryer.

6. INSTALL COOLER DRYER

(a) Using pliers, install the cooler dryer.

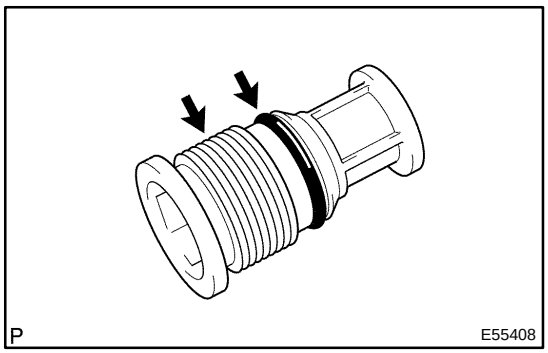

(b) Install the new O–ring to the cap.

(c) Sufficiently apply compressor oil to the fit surfaces of the O–ring and the cap.
Compressor oil: ND–OIL 8 or equivalent

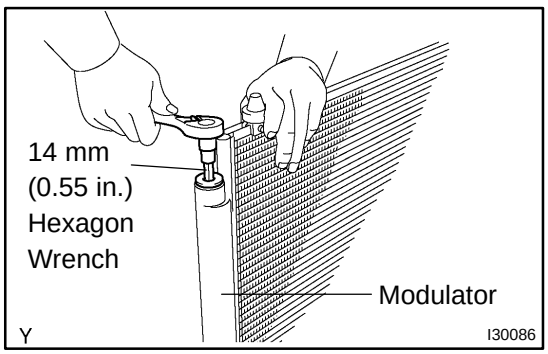

(d) Using a socket hexagon wrench 14 mm (0.55 in.), install the cap to the modulator.
Torque: 2.9 N·m (29 kgf·cm, 25 in.·lbf)

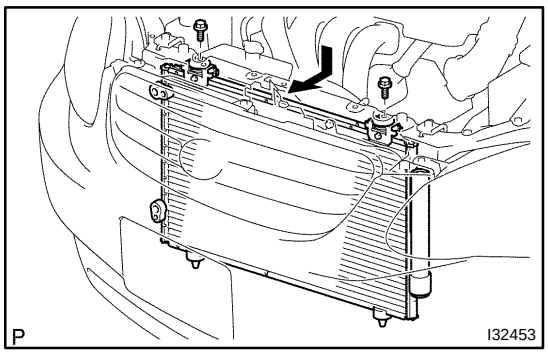

7. INSTALL W/RECEIVER CONDENSER ASSY

(a) Install the w/receiver condenser assy with the 2 bolts.
Torque: 9.8 N·m (100 kgf·cm, 87 in.·lbf)

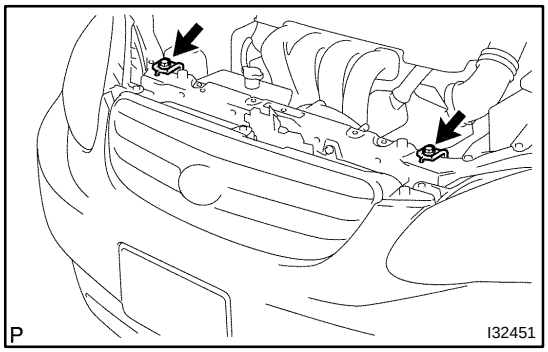

(b) Install the 2 radiator upper supports with the 2 bolts.

8. INSTALL DISCHARGE HOSE SUB–ASSY

(a) Remove the attached vinyl tape from the hose and connecting part of the w/receiver condenser assy.
(b) Sufficiently apple compressor oil to the new O–ring and hose joint.
Compressor oil: ND–OIL 8 or equivalent
(c) Install a O–ring to the discharge hose sub–assy.

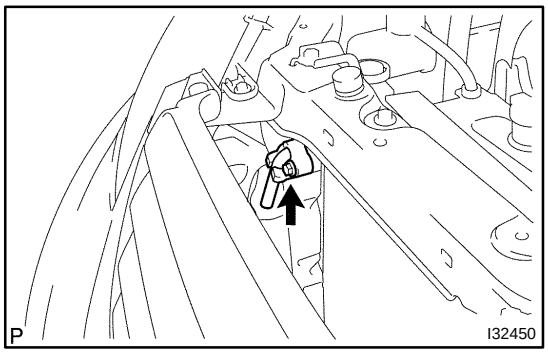

(d) Install the discharge hose sub–assy to the w/receiver condenser assy with the bolt.
Torque: 5.4 N·m (54 kgf·cm, 48 in.·lbf)

9. INSTALL COOLER REFRIGERANT LIQUID PIPE A

(a) Remove the attached vinyl tape from the pipe and w/receiver condenser assy.
(b) Sufficiently apple compressor oil to the new O–ring and pipe joint.
Compressor oil: ND–OIL 8 or equivalent
(c) Install a O–rings to the cooler refrigerant liquid pipe A.

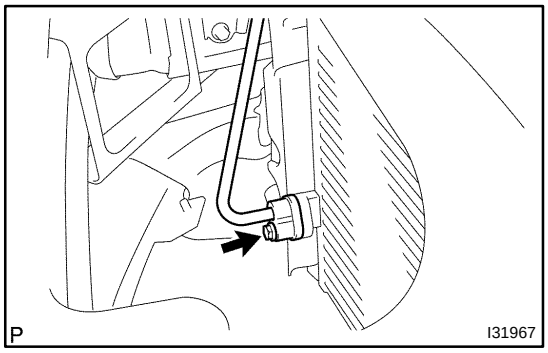

(d) Install the cooler refrigerant liquid pipe A to the w/receiver condenser assy with the bolt.
Torque: 5.4 N·m (54 kgf·cm, 48 in.·lbf)

10. CHARGE REFRIGERANT (See page 55–11)

SST 07110–58060 (07117–58060, 07117–58070, 07117–58080, 07117–58090, 07117–78050, 07117–88060, 07117–88070, 07117–88080), 07117–48130, 07117–48140

Specified amount: 490 ± 30 g (17.28 ± 1.06 oz.)

11. WARM UP ENGINE

12. INSPECT LEAKAGE OF REFRIGERANT (See page 55–11)

AIR BAG FRONT RH SENSOR

COMPONENTS

6007S–02

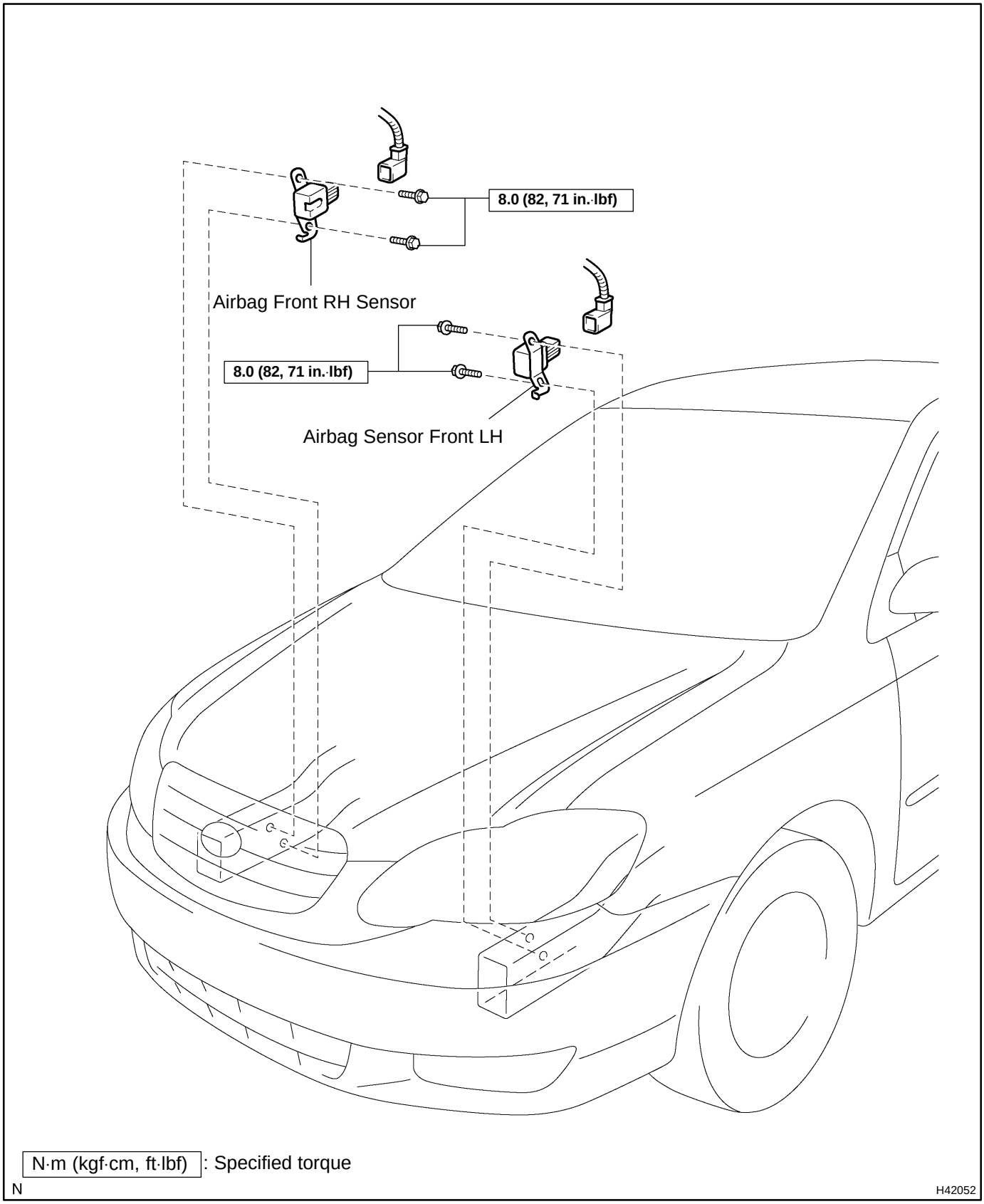

600C3–02

REPLACEMENT

HINT:

COMPONENTS: See page 60–39

1. PRECAUTION (See page 60–1)

2. DISCONNECT BATTERY NEGATIVE TERMINAL (See page 60–1)

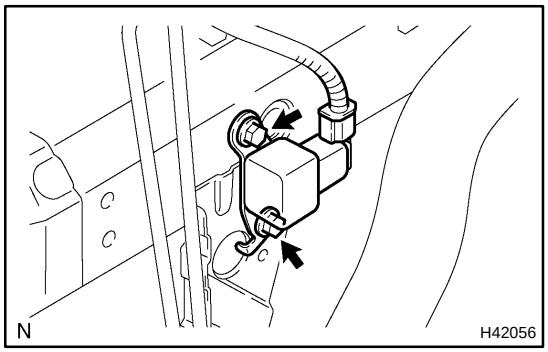

3. REMOVE AIR BAG FRONT RH SENSOR

(a) Disconnect the connector from the airbag front RH sensor.

(b) Remove the 2 bolts and airbag front RH sensor.

4. INSPECT AIR BAG FRONT RH SENSOR (See page 60–8)

5. INSTALL AIR BAG FRONT RH SENSOR

(a) Check that the ignition switch is turned to OFF.

(b) Check that the battery negative terminal is disconnected.

NOTICE:

Do not start the operation for 90 seconds after removing the terminal.

(c) Install the airbag front RH sensor with the 2 bolts.

Torque: 8.0 N·m (82 kgf·cm, 71 in·lbf)

(d) Connect the connector to the airbag front RH sensor.

(e) Check that no play is identified.

6. INSPECT SRS WARNING LIGHT (See page 05–424)

AIR BAG SENSOR ASSY CENTER

COMPONENTS

6007Q–02

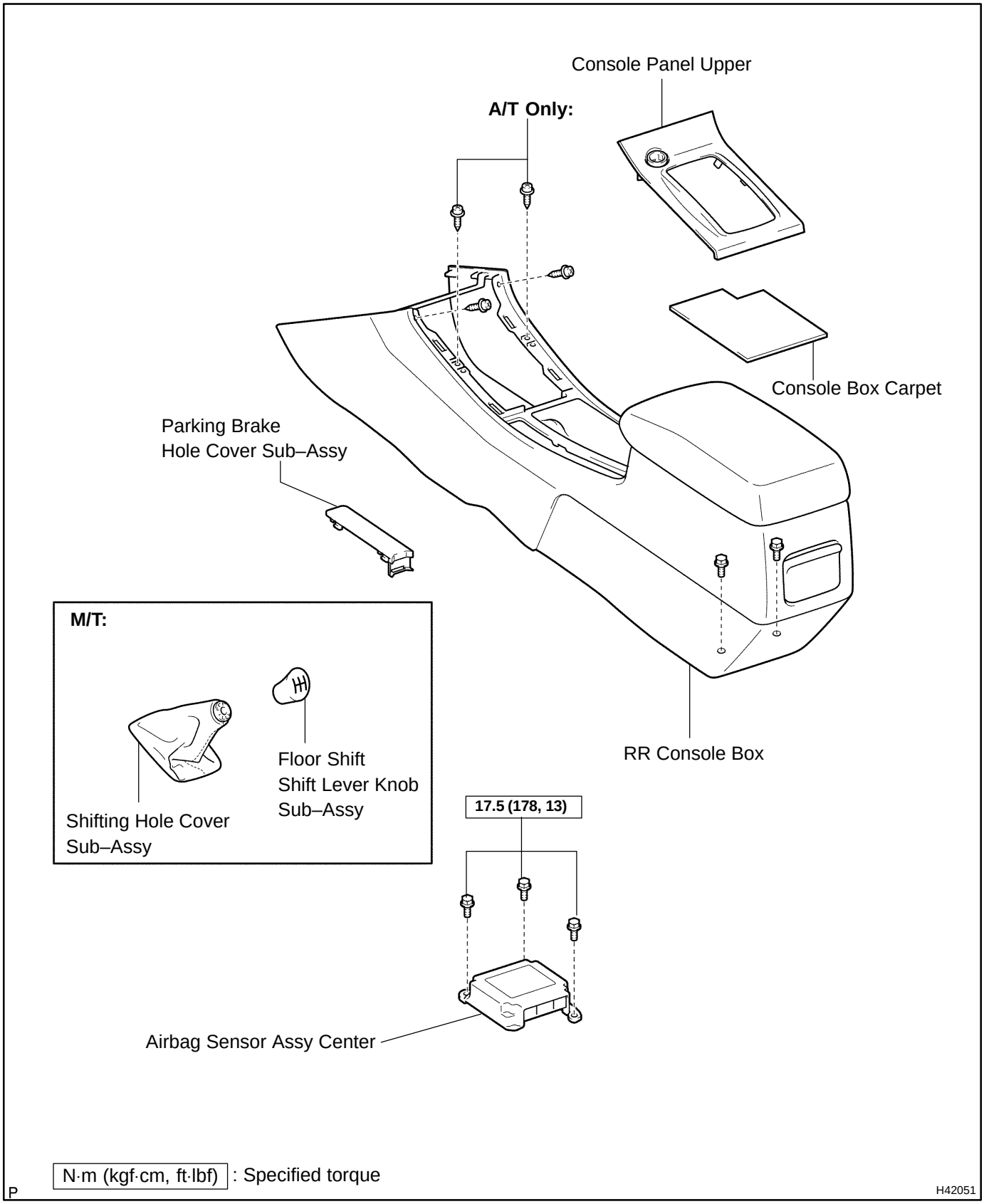

6007R–03

REPLACEMENT

HINT:

COMPONENTS: See page 60–37

1. **PRECAUTION (See page 60–1)**
2. **DISCONNECT BATTERY NEGATIVE TERMINAL (See page 60–1)**
3. **REMOVE PARKING BRAKE HOLE COVER SUB–ASSY (See page 71–10)**
4. **REMOVE FLOOR SHIFT SHIFT LEVER KNOB SUB–ASSY (M/T TRANSAXLE) (See page 71–10)**
5. **REMOVE SHIFTING HOLE COVER SUB–ASSY (M/T TRANSAXLE) (See page 71–10)**
6. **REMOVE CONSOLE PANEL UPPER (See page 71–10)**
7. **REMOVE CONSOLE BOX CARPET (See page 71–10)**
8. **REMOVE RR CONSOLE BOX (See page 71–10)**

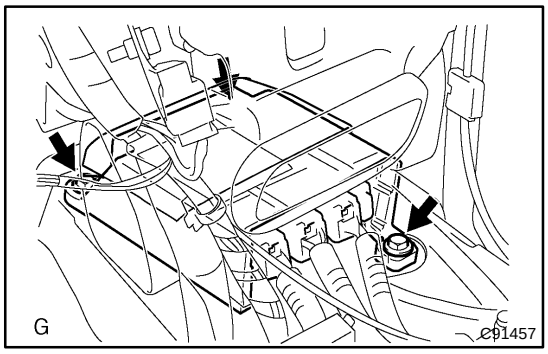

9. **REMOVE AIR BAG SENSOR ASSY CENTER**

(a) Disconnect the 3 connectors from the airbag sensor assy center.

(b) Remove the 3 bolts and airbag sensor assy center.

10. **INSPECT AIR BAG SENSOR ASSY CENTER (See page 60–8)**
11. **INSTALL AIR BAG SENSOR ASSY CENTER**

(a) Check that the ignition switch is turned to OFF.

(b) Check that the battery negative terminal is disconnected.

NOTICE:

Do not start the operation for 90 seconds after removing the terminal.

(c) Temporarily install the airbag sensor assy center with the 3 bolts.

(d) Tighten the 3 bolts to the specified torque.

Torque: 17.5 N·m (178 kgf·cm, 13 ft·lbf)

(e) Connect the connector to the airbag sensor assy center.

(f) Check that no play is identified.

12. **INSPECT SRS WARNING LIGHT (See page 05–424)**

AIR BAG SENSOR FRONT LH

6007U–02

COMPONENTS

(See page 60–39)

600C4–02

REPLACEMENT

HINT:

COMPONENTS: See page 60–39

1. PRECAUTION (See page 60–1)

2. DISCONNECT BATTERY NEGATIVE TERMINAL (See page 60–1)

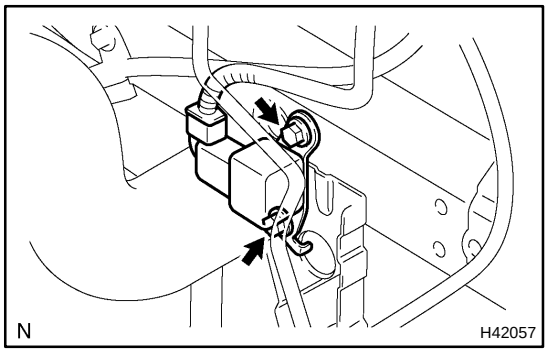

3. REMOVE AIR BAG SENSOR FRONT LH

(a) Disconnect the connector from the airbag sensor front LH.

(b) Remove the 2 bolts and airbag sensor front LH.

4. INSPECT AIR BAG SENSOR FRONT LH (See page 60–8)

5. INSTALL AIR BAG SENSOR FRONT LH

(a) Check that the ignition switch is turned to OFF.

(b) Check that the battery negative terminal is disconnected.

NOTICE:

Do not start the operation for 90 seconds after removing the terminal.

(c) Install the airbag sensor front LH with the 2 bolts.

Torque: 8.0 N·m (82 kgf·cm, 71 in·lbf)

(d) Connect the connector to the airbag sensor front LH.

(e) Check that no play is identified.

6. INSPECT SRS WARNING LIGHT (See page 05–424)

FRONT SEAT AIRBAG ASSY RH

6007P–03

DISPOSAL

HINT:

- When scrapping vehicles equipped with an SRS or disposing of the front seat airbag assy always first deploy the airbag in accordance with the procedure described below. If any abnormality occurs with the airbag deployment, contact the SERVICE DEPT. of TOYOTA MOTOR SALES, U.S.A., INC.
- When disposing of a front seat airbag assy with an airbag deployed in a collision, follow the same procedure given in step 1–(e) in ”DISPOSAL”.

CAUTION:

- **Never dispose of a front seat airbag assy which has an undeployed airbag.**
- **The airbag produces a sizeable exploding sound when it deploys, so perform the operation out of doors and where it will not create a nuisance to nearby residents.**

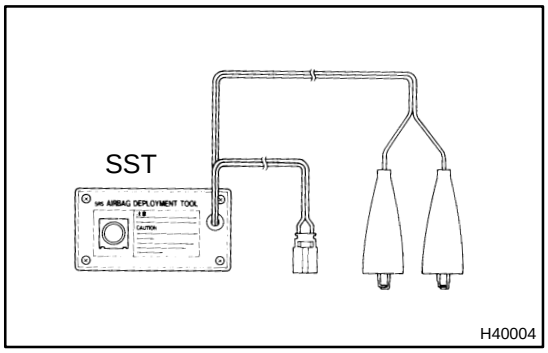

- **When deploying the airbag, always use the specified SST (SRS Airbag Deployment Tool), perform the operation in a place away from electrical noise.**
- **When deploying an airbag, perform the operation at least 10 m (33 ft) away from the airbag assy.**
- **The front seat airbag assy is very hot when the airbag is deployed, so leave it alone for at least 30 minutes after deployment.**
- **Use gloves and safety glasses when handling front seat airbag assy with the deployed airbag.**
- **Always wash your hands with water after completing the operation.**
- **Do not apply water, etc. to a front seat airbag assy with the deployed airbag.**

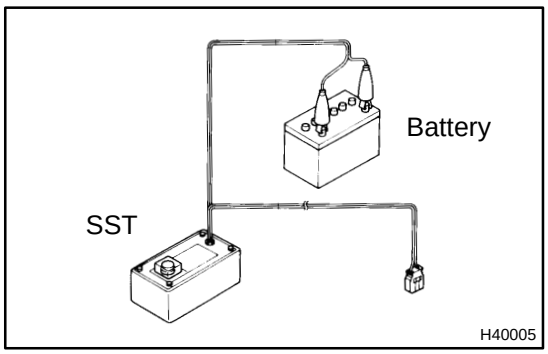

1. DISPOSE FRONT SEAT AIRBAG ASSY RH (WHEN SCRAPPING VEHICLE DEPLOYMENT METHOD)

HINT:

Prepare a battery for the power source to deploy the airbag.

(a) Check the function of SST (See step 1–(a) on page 60–14).

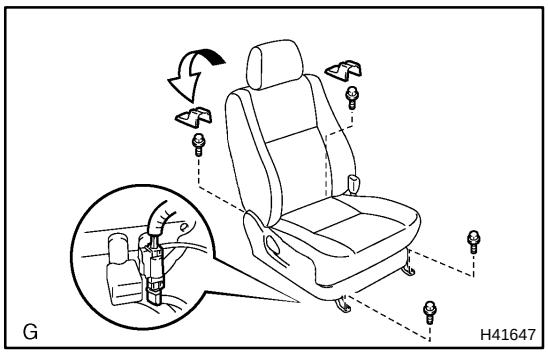

(b) Disconnect the front seat airbag assy connector.

NOTICE:

When handling the airbag connector, take care not to damage the airbag wire harness.

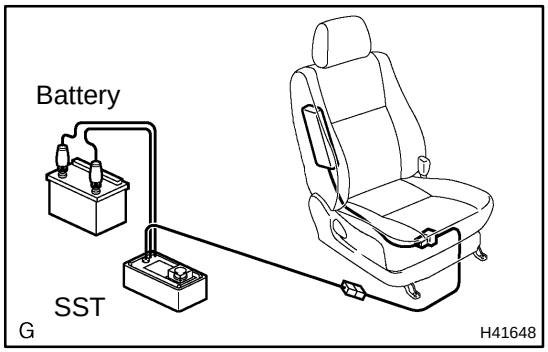

(c) Set SST.

(1) Connect the connectors of the 2 SST to the front seat airbag assy connector.

SST 09082–00700, 09082–00750

NOTICE:

To avoid damaging the SST connector and wire harness, do not lock the secondary lock of the twin lock.

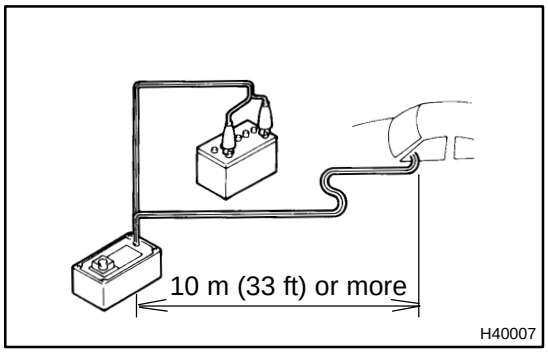

(2) Move the SST at least 10 m (33 ft) away from the front of the vehicle.

(3) Close all the doors and windows of the vehicle.

NOTICE:

Take care not to damage the SST wire harness.

(4) Connect the SST red clip to the battery positive (+) terminal and the black clip to the battery negative (–) terminal.

(d) Deploy the airbag.

(1) Check that no one is inside the vehicle or within 10 m (33 ft) area around the vehicle.

(2) Press the SST activation switch and deploy the airbag.

HINT:

The airbag deploys simultaneously when the LED of SST activation switch lights up.

(e) Dispose of the front seat airbag assy.

CAUTION:

- **The front seat airbag assy is very hot when the airbag is deployed, so leave it for at least 30 minutes after deployment.**
- **Use gloves and safety glasses when handling a front seat airbag assy with the deployed airbag.**
- **Do not apply water, etc. to a front seat airbag assy with the deployed airbag.**
- **Always wash your hands with water after completing the operation.**

HINT:

When scrapping a vehicle, deploy the airbag and scrap the vehicle with the front seat airbag assy being installed.

2. DISPOSE FRONT SEAT AIRBAG ASSY RH (WHEN DISPOSING OF AIRBAG ASSEMBLY DEPLOYMENT METHOD)

NOTICE:

- **When disposing of the front seat airbag assy only, never use the customer's vehicle to deploy the airbag.**
- **Be sure to follow the procedure given below when deploying the airbag.**

HINT:

Prepare a battery for the power source to deploy the airbag.

(a) Remove the front seat airbag assy.

(1) Remove the 2 nuts and front seat airbag assy from the seatback assembly.

CAUTION:

Store the front seat airbag assy with the airbag deployment side facing upward.

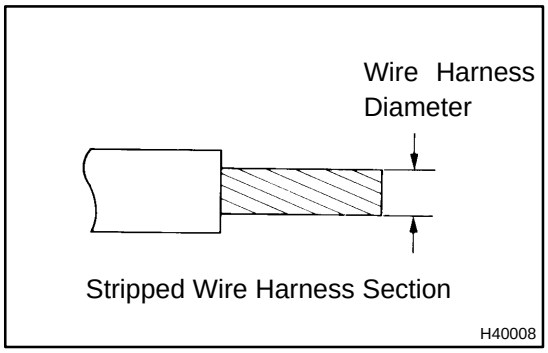

(b) Using a service–purpose wire harness, tie down the front seat airbag assy.

Wire harness: Stripped wire harness section 1.25 mm^2 or more (0.0019 in^2 or more)

CAUTION:

If the wire harness is too thin or some other things are used to tie down the front seat airbag assy, it may be snapped by the shock when the airbag is deployed. This is highly dangerous. Be sure to use of wire harness which is at least 1.25 mm^2 (0.0019 in^2).

HINT:

To calculate the area of the stripped wire harness section :

Area = 3.14 x (Diameter)^2 divided by 4

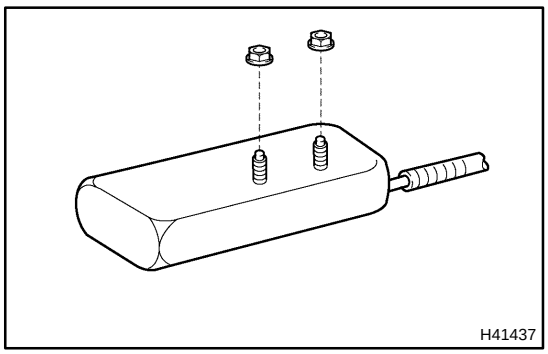

(1) Install the 2 nuts in the front seat airbag assy.

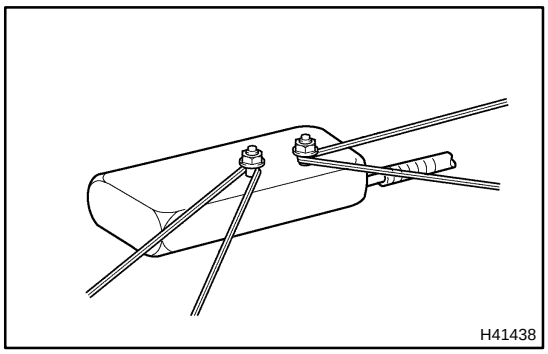
H41438

(2) Wind the wire harness around the stud bolts of the front seat airbag assy as shown in the illustration.

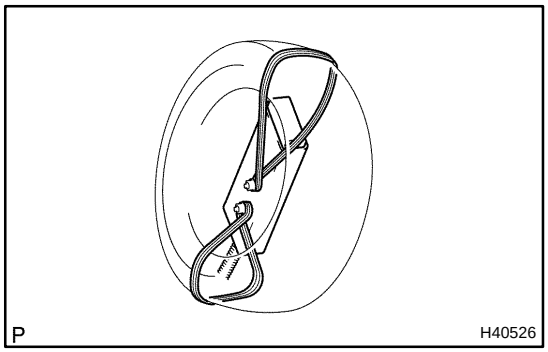
P H40526

(3) Position the front seat airbag assy inside the tire with the airbag deployment direction facing inside.

Tire size : Must exceed the following dimensions:–
Width 185 mm (7.28 in.)
Inner diameter 360 mm (14.17 in.)

CAUTION:

- **Make sure the wire harness is tight. It is very dangerous when loosened wire harness results in the front seat airbag assy coming free due to the shock from the airbag deployment.**
- **Always tie down the front seat airbag assy with the airbag facing inside.**

NOTICE:

The tire will be marked by the airbag deployment, so use the redundant tire.

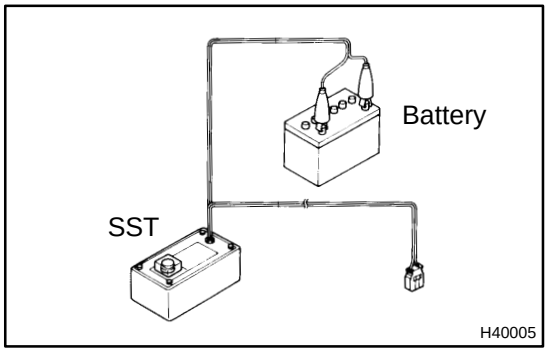

H40005

(c) Check the function of SST (See step 1–(a) on page 60–14)
SST 09082–00700

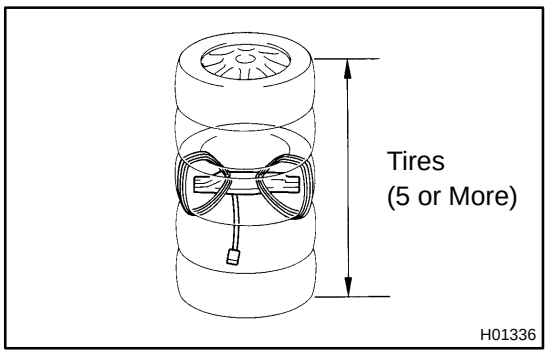

H01336

(d) Place the tires.
(1) Place at least 2 tires under the tire to which the front seat airbag assy is tied.
(2) Place at least 2 tires over the tire to which the front seat airbag assy is tied. The top tire should have the wheel installed.

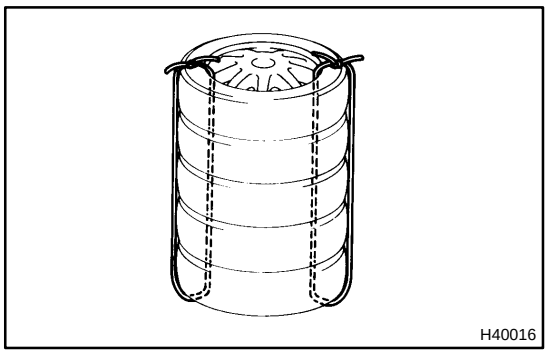

(3) Tie the tires together with 2 wire harnesses.

CAUTION:

Make sure that the wire harnesses are tight. It is very dangerous when loosened wire harnesses results in the tires coming free due to the shock from the airbag deploying.

HINT:

Place the SST connector and wire harness inside tires. Secure at least 1 m (3 ft) of slack for the wire harness.

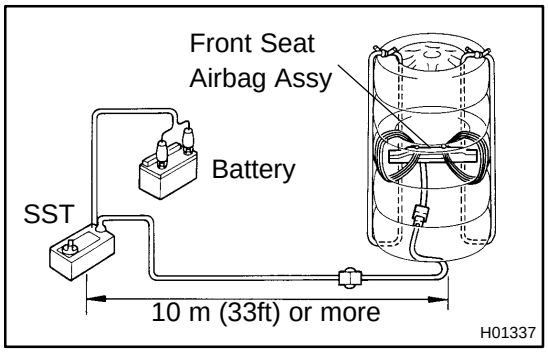

(e) Set SST.

Connect the connector of the 2 SST to the front seat airbag assy connector.

SST 09082–00700, 09082–00750

NOTICE:

To avoid damaging the SST connector and wire harness, do not lock the secondary lock of the twin lock.

(f) Deploy the airbag.

(1) Connect the SST red clip to the battery positive (+) terminal and the black clip to the battery negative (–) terminal.

(2) Check that no one is within 10 m (33 ft) radius around the tire which the front seat airbag assy is tied to.

(3) Press the SST activation switch and deploy the airbag.

HINT:

The airbag deploys simultaneously when the LED of the SST activation switch lights up.

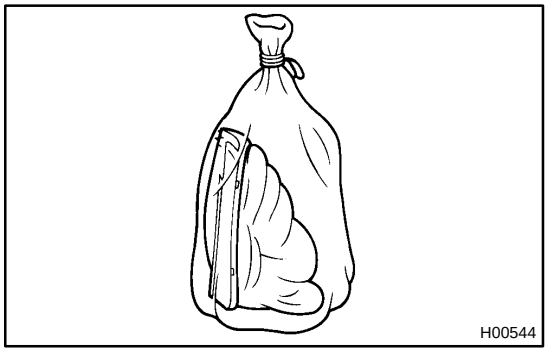

(g) Dispose of the front seat airbag assy.

CAUTION:

- **The front seat airbag assy is very hot when the airbag is deployed, so leave it for at least 30 minutes after deployment.**
- **Use gloves and safety glasses when handling a front seat airbag assy with the deployed airbag.**
- **Do not apply water etc. to a front seat airbag assy with the deployed airbag.**
- **Always wash your hands with water after completing the operation.**

(1) Remove the front seat airbag assy from the tire.

(2) Place the front seat airbag assy in a vinyl bag, tie the end tightly and dispose of it in the same way as other general parts disposal.

HORN BUTTON ASSY (April, 2003)

COMPONENTS

6007E–03

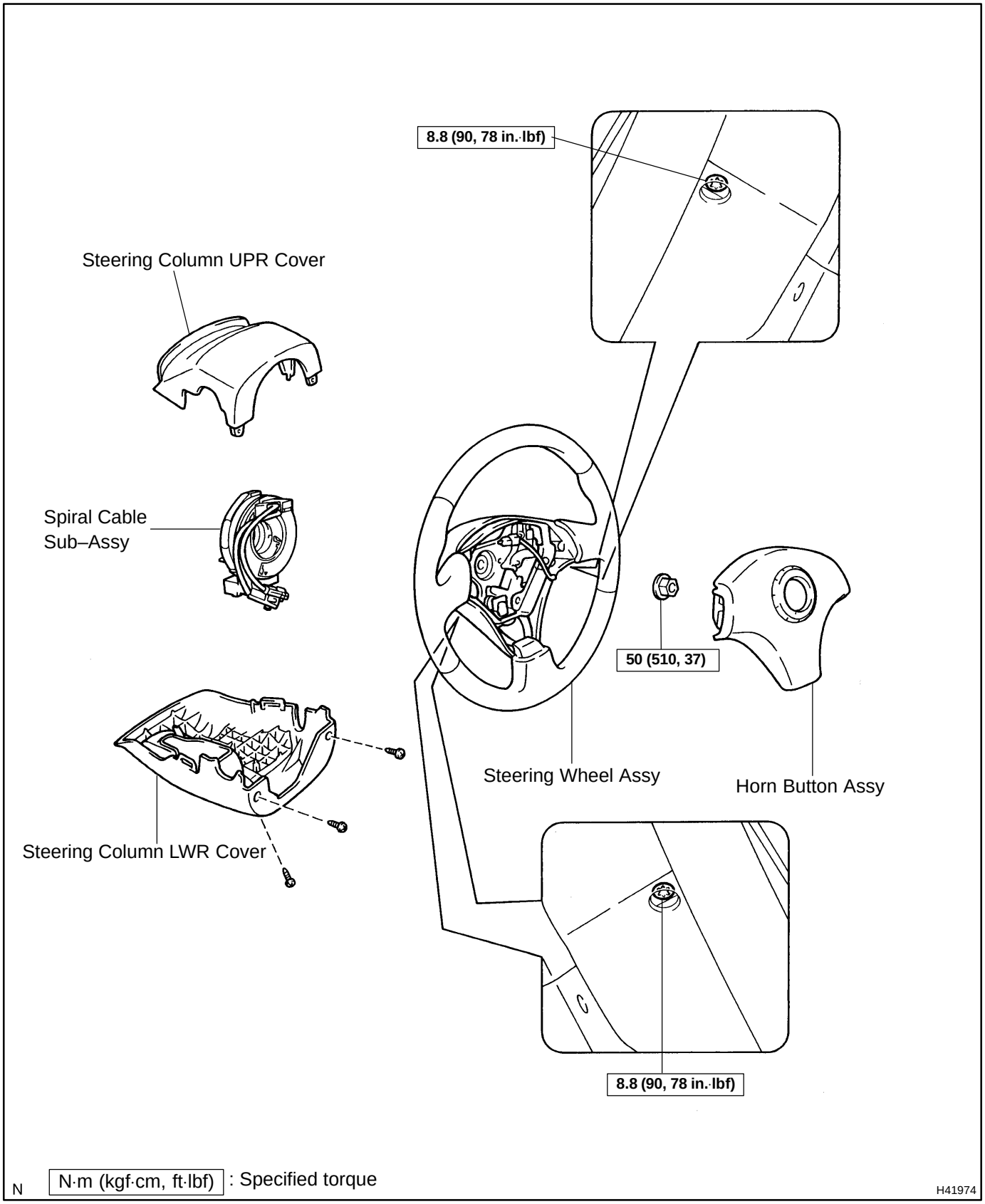

N N·m (kgf·cm, ft·lbf) : Specified torque

H41974

600BZ–03

DISPOSAL

HINT:

When scrapping vehicle equipped with an SRS or disposing of a horn button assy, always first deploy the airbag in accordance with the procedure described below. If any abnormality occurs in the airbag deployment, contact the SERVICE DEPT. of TOYOTA MOTOR SALES, U.S.A., INC.

CAUTION:

- **Never dispose of a horn button assy which has an undeployed airbag.**
- **The airbag produces a sizeable exploding sound when it deploys, so perform the operation out of doors and the place where it will not create a nuisance to nearby residents.**

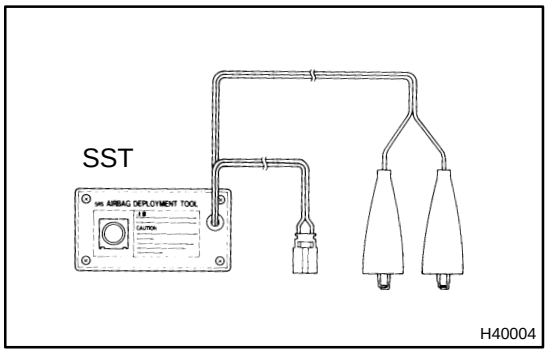

- **When deploying the airbag, always use the specified SST (SRS Airbag Deployment Tool). Perform the operation in a place away from electrical noise.**
- **When deploying an airbag, perform the operation at least 10 m (33 ft) away from the horn button assy.**
- **The horn button assy is very hot when the airbag is deployed, so leave it for at least 30 minutes after deployment.**
- **Use gloves and safety glasses when handling a horn button assy with the deployed airbag.**
- **Always wash your hands with water after completing the operation.**
- **Do not apply water, etc. to a horn button assy attached on the deployed airbag.**

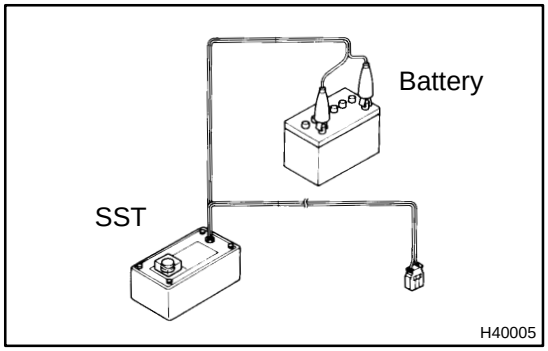

1. DISPOSE OF HORN BUTTON ASSY (WHEN SCRAPPING VEHICLE DEPLOYMENT METHOD)

HINT:

Prepare a battery for the power source to deploy the airbag.

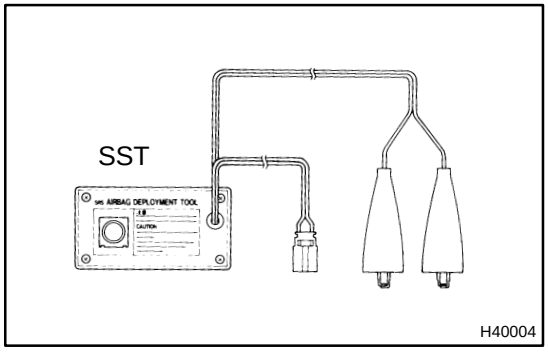

(a) Check the function of SST.

CAUTION:

When deploying the airbag, always use the specified SST: SRS Airbag Deployment Tool.

SST 09082–00700

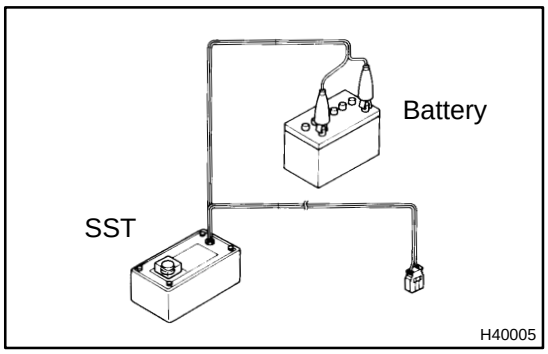

(1) Connect the SST to the battery.
Connect the red clip of the SST to the battery positive (+) terminal and the black clip to the battery negative (–) terminal.

HINT:
Do not connect the yellow connector which will be connected with the supplemental restraint system.

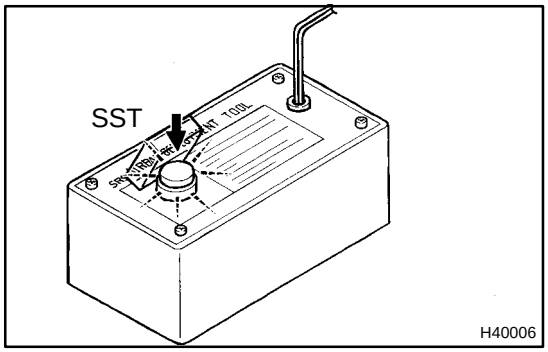

(2) Check the function of SST.
Press the SST activation switch, and check that the LED of the SST activation switch lights up.

CAUTION:
If the LED lights up when the activation switch is not being pressed, SST malfunction is probable, so definitely do not use the SST.

(3) Disconnect the SST from the battery.

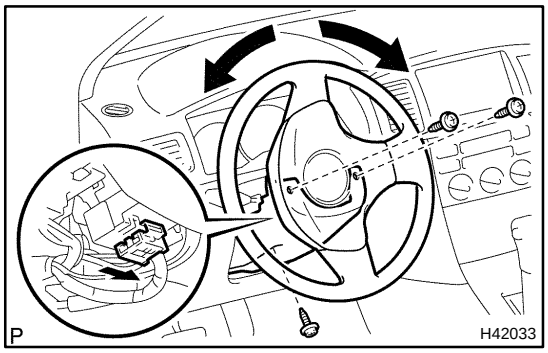

(b) Set SST.

CAUTION:
Check that there is no looseness in the steering wheel and horn button assy.

(1) While turning the steering wheel to the right / left, remove the 3 screws and column lower cover.
(2) Disconnect the airbag connector of the spiral cable.

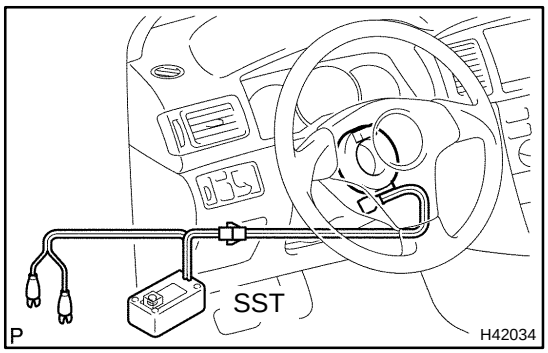

(3) Connect the connectors of the 2 SST to the airbag connector of the spiral cable back side.
SST 09082–00700, 09082–00780

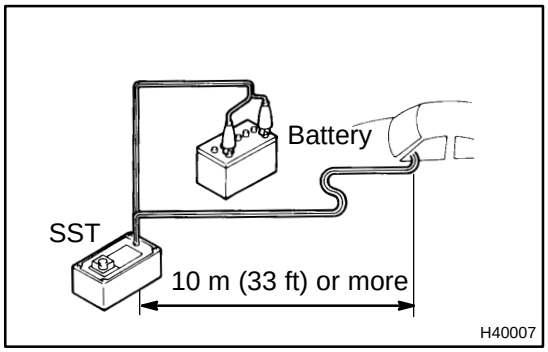

(4) Move the SST at least 10 m (33 ft) away from the front of the vehicle.
(5) Close all the doors and windows of the vehicle.

NOTICE:
Take care not to damage the SST wire harness.

(6) Connect the red clip of the SST to the battery positive (+) terminal and the black clip to the negative (–) terminal.

(c) Deploy the airbag.
(1) Confirm that no one is inside the vehicle or within 10 m (33 ft) area around the vehicle.
(2) Press the SST activation switch and deploy the airbag.

HINT:
The airbag deploys simultaneously when the LED of the SST activation switch lights up.

(d) Dispose of the horn button assy (with airbag).

CAUTION:
- **The horn button assy is very hot when the airbag is deployed, so leave it for at least 30 minutes after deployment.**
- **When moving a vehicle which has a horn button assy with deployed airbag for scrapping, use gloves and safety glasses.**
- **Use gloves and safety glasses when handling a horn button assy with the deployed airbag.**
- **Always wash your hands with water after completing the operation.**
- **Do not apply water, etc. to a horn button assy attached on the deployed airbag.**

HINT:
When scrapping a vehicle, deploy the airbag and scrap the vehicle with the horn button assy still installed.

2. DISPOSE OF HORN BUTTON ASSY (WHEN DISPOSING OF AIRBAG ASSEMBLY DEPLOYMENT METHOD)

NOTICE:
- **When disposing of the horn button assy (with airbag) only, never use the customers vehicle to deploy the airbag.**
- **Be sure to follow the procedure given below when deploying the airbag.**

HINT:
Prepare a battery for the power source to deploy the airbag.

(a) Remove the horn button assy (See page 60–13).

CAUTION:
When storing the horn button assy, keep the upper surface of the pad facing upward.

(b) Using a service–purpose wire harness, tie down the horn button assy to the disc wheel.
Wire harness: Stripped wire harness section 1.25 mm^2 or more (0.0019 in^2. or more)

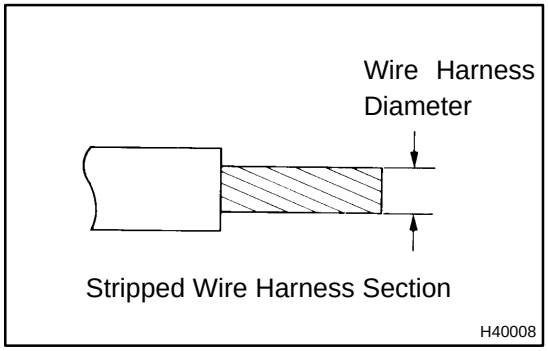

CAUTION:
If the wire harness is too thin or some other things are used to tie down the horn button assy, it may be snapped by the shock when the airbag is deployed. This is highly dangerous. Be sure to use the wire harness which is at least 1.25 mm^2 (0.0019 in^2).

HINT:
To calculate the area of the stripped wire harness section:
Area = 3.14 x (Diameter)^2 divided by 4

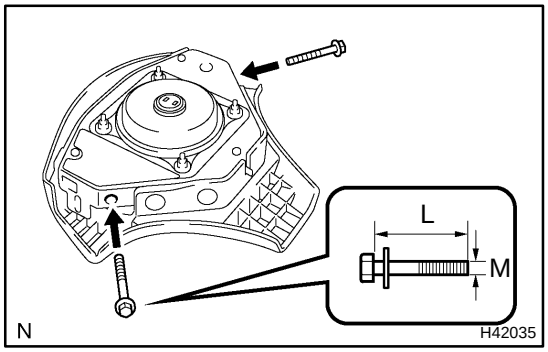

(1) Install the 2 bolts with washers in the 2 bolt holes in the horn button assy.

Bolt:
L: 35.0 mm (1.387 in.)
M: 6.0 mm (0.236 in.)
Pitch: 1.0 mm (0.039 in.)

NOTICE:

- **Tighten the bolts by hand until the bolts become difficult to turn.**
- **Do not tighten the bolts too much.**

(2) Connect the connectors of the SST to the horn button assy connectors.

SST 09082–00802 (09082–10801, 09082–30801)

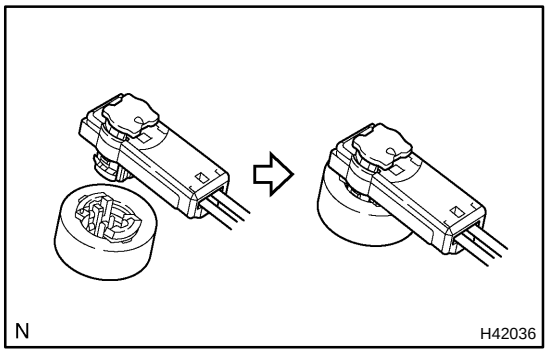

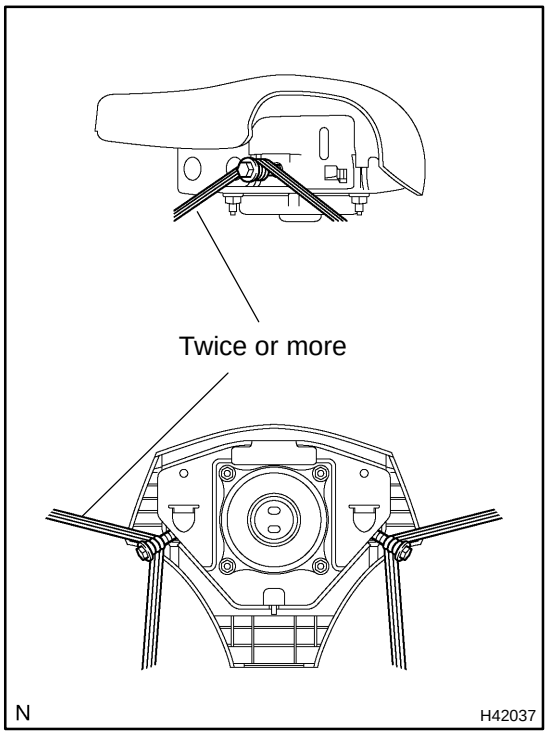

(3) Using 3 wire harness, wind the wire harness at least twice each around the bolts installed on the left and right sides of the horn button assy.

CAUTION:

- **Tightly wind the wire harness around the bolts so that there is no slack.**
- **If there is slack in the wire harness, the horn button assy may come loose due to the shock when the airbag is deployed. This is highly dangerous.**

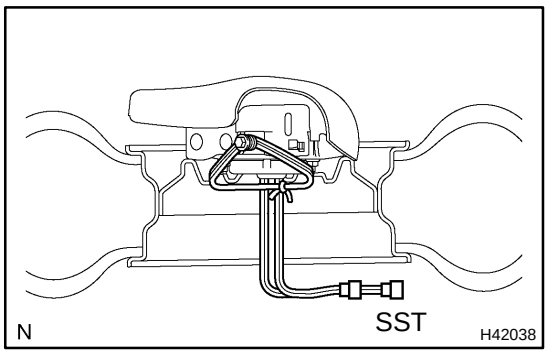

(4) Face the upper surface of the horn button assy upward. Separately tie the left and right sides of the horn button assy to the disc wheel through the hub nut holes. Position the horn button assy connector so that it hangs downward through a hub hole in the disc wheel.

CAUTION:

- **Make sure that the wire harness is tight. It is very dangerous when the loosened wire harness results in the horn button assy coming free through the shock from the airbag deployment.**
- **Always tie down the horn button assy with the pad side facing upward. It is very dangerous if the horn button assy is tied down with the metal surface facing upward as the wire harness will be cut by the shock from the airbag deployment and the horn button assy will be flown into the air.**

NOTICE:

The disc wheel will be marked by airbag deployment, so when disposing of the airbag, use a redundant disc wheel.

(c) Check the function of SST (See step 1–(a)).

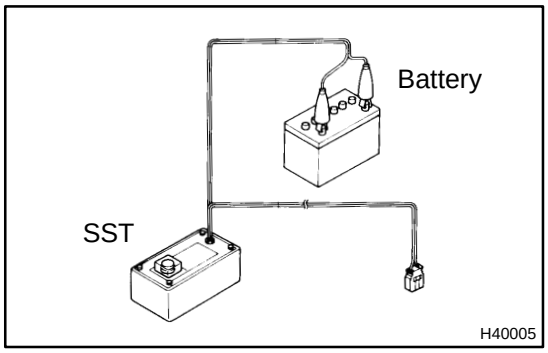

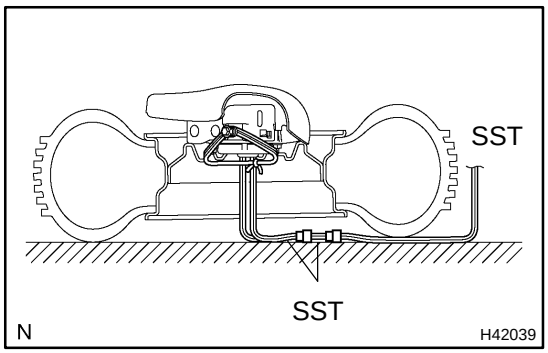

(d) Set SST.

CAUTION:

Place the disc wheel on the level ground.

(1) Connect the connector of the SST.

SST 09082–00700

NOTICE:

To avoid damaging the SST connector and wire harness, do not lock the secondary lock of the twin lock. Also, secure some slack for the SST wire harness inside the disc wheel.

(2) Move the SST at least 10 m (33 ft) away from the horn button assy tied down on the disc wheel.

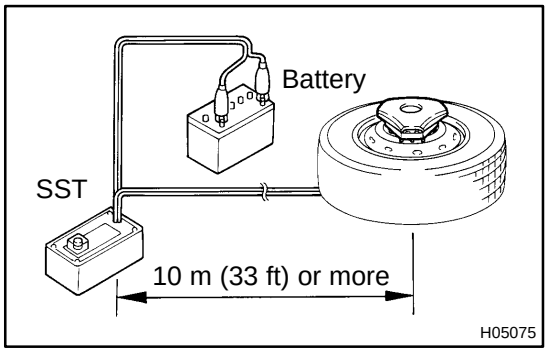

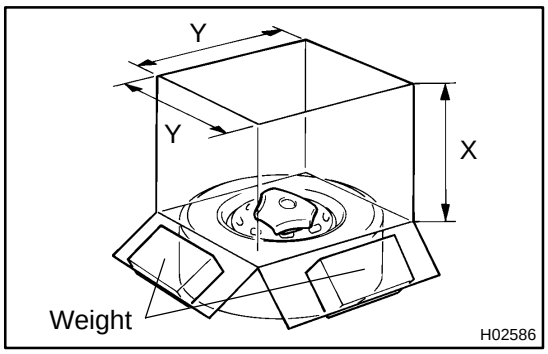

(e) Cover the horn button assy with a cardboard box or tires.

- Covering method using a cardboard box:
  Cover the horn button assy with the cardboard box and weight the cardboard box down in 4 places with at least 190 N (20 kg, 44 lb).

Size of cardboard box:
Must exceed the following dimensions:
X = 460 mm (18.11 in.)
Y = 650 mm (25.59 in.)

NOTICE:

- **When dimension Y of the cardboard box exceeds the diameter of the disc wheel with tire to which the horn button assy is tied, X should be the following size.**
  X = 460 mm (18.11 in.) + width of tire
- **If a cardboard box smaller than the specified size is used, the cardboard box will be broken by the shock from the airbag deployment.**

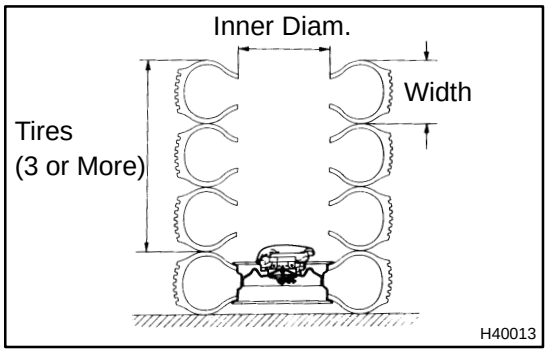

- Covering method using tires:
  Place at least 3 tires without disc wheel on top of the disc wheel with tire to which the horn button assy is tied.

Tire size: Must exceed the following dimensions–
Width: 185 mm (7.28 in.)
Inner diameter: 360 mm (14.17 in.)

CAUTION:
Do not use tires with disc wheels.

NOTICE:
The tires may be marked by the airbag deployment, so use the redundant tires.

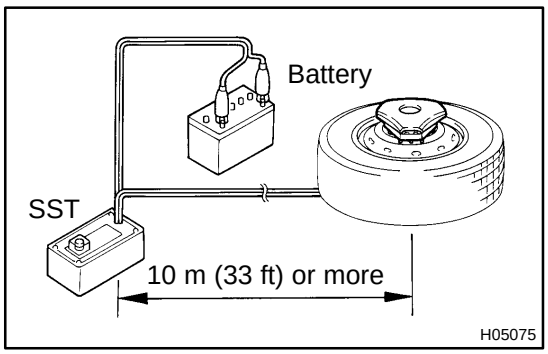

(f) Deploy the airbag.

(1) Connect the SST red clip to the battery positive (+) terminal and the black clip to the battery negative (–) terminal.
(2) Check that no one is within 10 m (33 ft) area around the disc wheel which the horn button assy is tied to.
(3) Press the SST activation switch and deploy the airbag.

HINT:
The airbag deploys simultaneously when the LED of the SST activation switch lights up.

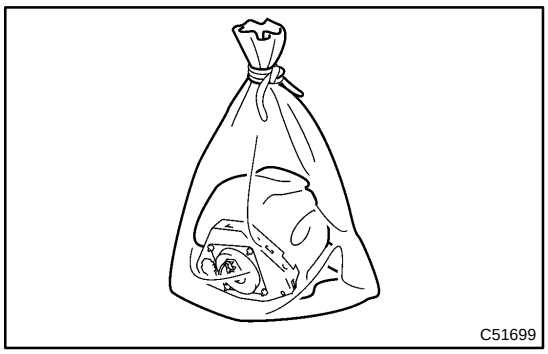
C51699

(g) Dispose of the horn button assy (with airbag).

CAUTION:

- **The horn button assy is very hot when the airbag is deployed, so leave it for at least 30 minutes after deployment.**
- **Use gloves and safety glasses when handling a horn button assy with the deployed airbag.**
- **Always wash your hands with water after completing the operation.**
- **Do not apply water, etc. to a horn button assy attached on the deployed airbag.**

(1) Remove the horn button assy from the disc wheel.

(2) Place the horn button assy in a vinyl bag, tie the end tightly and dispose of it in the same way as other general parts disposal.

6007F–05

REPLACEMENT

HINT:

COMPONENTS: See page 60–12

1. PRECAUTION (See page 60–1)

2. DISCONNECT BATTERY NEGATIVE TERMINAL (See page 60–1)

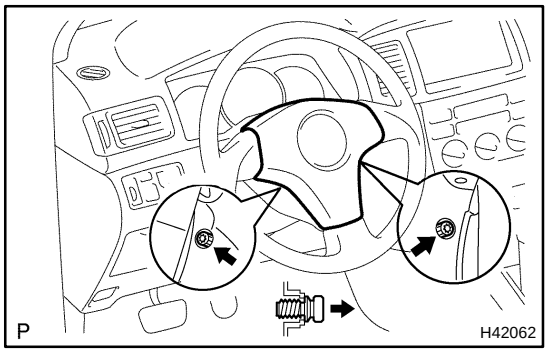

3. REMOVE HORN BUTTON ASSY

(a) Place the front wheels facing straight ahead.

(b) Using a torx socket wrench (T30), loosen the 2 torx screws until the groove along the screw circumference catches on the screw case.

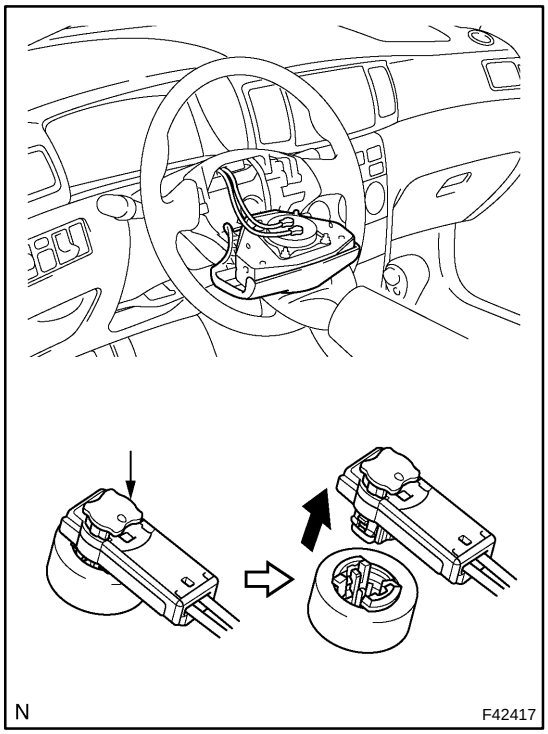

(c) Pull out the horn button assy from the steering wheel assy.

(d) Using a screwdriver, release the lock part of each airbag connector and disconnect the 2 airbag connectors.

4. INSPECT HORN BUTTON ASSY (See page 60–8)

5. INSTALL HORN BUTTON ASSY

(a) Connect the airbag connectors and horn connector.

(b) Install the horn button assy after confirming that the circumference groove of the torx screws is caught on the screw case.

(c) Using a torx socket wrench (T 30), install the 2 screws.

Torque: 8.8 N·m (90 kgf·cm, 78 in.·lbf)

6. INSPECT SRS WARNING LIGHT (See page 05–424)

600BY–02

ON–VEHICLE INSPECTION

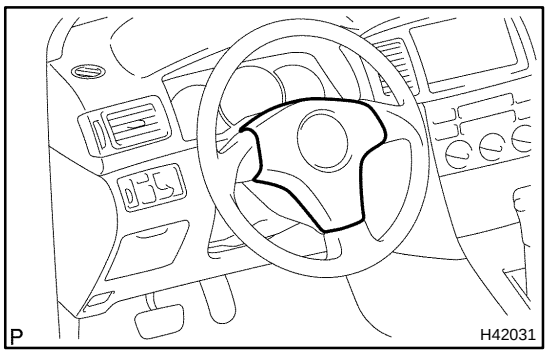

1. HORN BUTTON ASSY (VEHICLES NOT INVOLVED IN COLLISION)

(a) Check the diagnostic system (See page 05–424).

(b) Visually check the following item with the horn button assy (with airbag) installed in the vehicle.

Check cuts, minute cracks or marked discoloration on the horn button assy top surface and in the grooved portion.

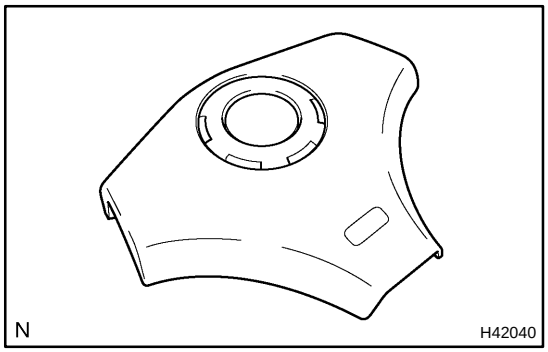

2. HORN BUTTON ASSY(VEHICLE INVOLVED IN COLLISION AND AIRBAG IS NOT DEPLOYED)

(a) Check the diagnostic system (See page 05–424).

(b) Visually check the following items with the horn button assy (with airbag) removed from the vehicle.

- Check cuts, minute cracks or marked discoloration on the horn button assy top surface and in the grooved portion.
- Check cuts and cracks in wire harness, and chipping in connectors.
- Check the deformation on the steering wheel.

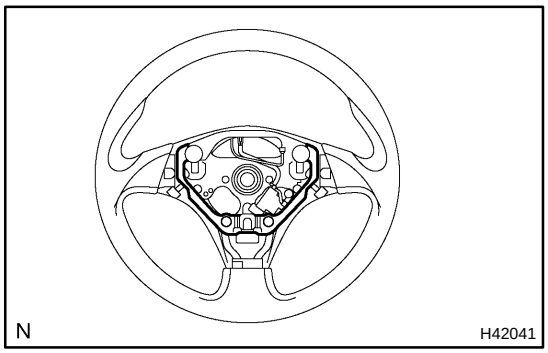

- Check the deformation on the horn button contact plate of the steering wheel assy.

HINT:

- If the horn button contact plate of the steering wheel assy is deformed, never repair it. Always replace the horn button assy with a new one.

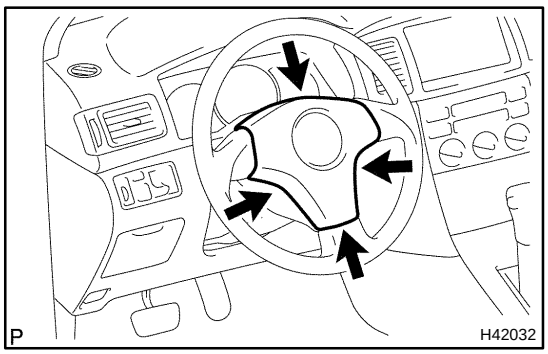

- There should be no interference between the horn button assy and steering wheel, and the clearance should be uniform all the way around when the new horn button assy is installed on the steering wheel.

CAUTION:

For removal and installation of the horn button assy, see page 60–13, and be sure to follow the correct procedure.

3. HORN BUTTON ASSY(VEHICLE INVOLVED IN COLLISION AND AIRBAG IS DEPLOYED)

(a) Check the diagnostic system (See page 05–424).

(b) Visually check the following item with the horn button assy (with airbag) removed from the vehicle.
Check the damage on the spiral cable connector and wire harness.

HINT:

There should be no interference between the horn button assy and steering wheel, and the clearance should be uniform all the way around when the new horn button assy is installed on the steering wheel.

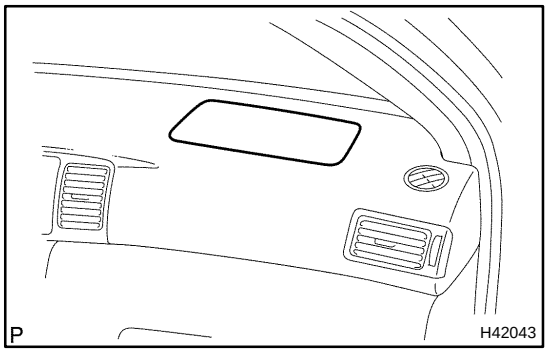

4. INSTRUMENT PANEL PASSENGER AIRBAG ASSY(VEHICLE NOT INVOLVED IN COLLISION)

(a) Check the diagnostic system (See page 05–424).

(b) Visually check the following item with the instrument panel passenger airbag assy installed in the vehicle.
Check cuts, minute cracks or marked discoloration on the instrument panel passenger airbag assy and instrument panel.

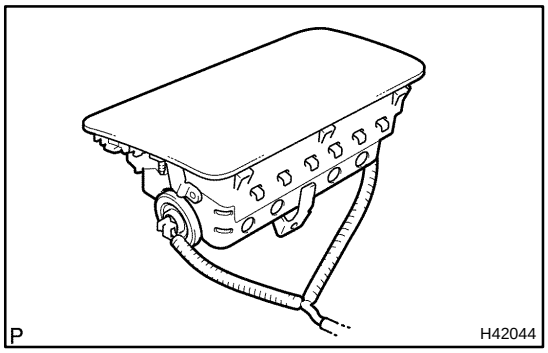

5. INSTRUMENT PANEL PASSENGER AIRBAG ASSY(VEHICLE INVOLVED IN COLLISION AND AIRBAG IS NOT DEPLOYED)

(a) Check the diagnostic system (See page 05–424).

(b) Visually check the following items with the instrument panel passenger airbag assy removed from the vehicle.

- Check cuts, minute cracks or marked discoloration on the instrument panel passenger airbag assy.
- Check cuts and cracks in wire harness, and for chipping in connectors.
- Check the deformation or cracks on the instrument panel and instrument panel reinforcement.

HINT:

If the instrument panel or instrument panel reinforcement is deformed or cracked, never repair it. Always replace it with a new one.

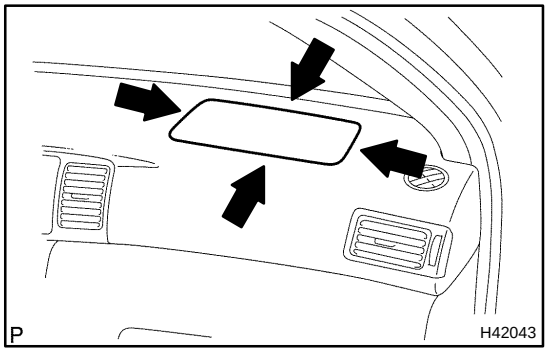

CAUTION:

For removal and installation of the instrument panel passenger airbag assy, see page 60–25, and be sure to follow the correct procedure.

6. INSTRUMENT PANEL PASSENGER AIRBAG ASSY(VEHICLE INVOLVED IN COLLISION AND AIRBAG IS DEPLOYED)

(a) Check the diagnostic system (See page 05–424).

(b) Visually check the following items with the instrument panel passenger airbag assy removed from the vehicle.

- Check the deformation or cracks on the instrument panel and instrument panel reinforcement.
- Check the damage on the connector and wire harness.

HINT:

If the instrument panel or instrument panel reinforcement is deformed or cracked, never repair it. Always replace it with a new one.

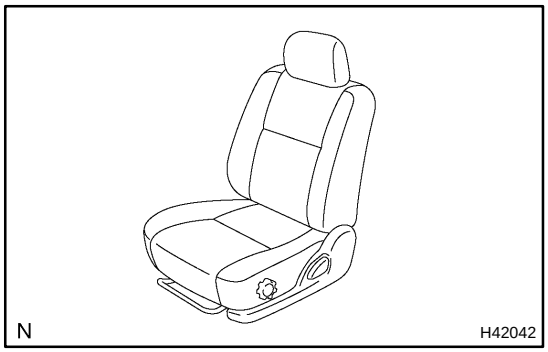

7. FRONT SEAT AIRBAG ASSY(VEHICLE NOT INVOLVED IN COLLISION)

(a) Check the diagnostic system (See page 05–424).

(b) Visually check the following item with the front seat airbag assy installed in the vehicle.

Check cuts, minute cracks or marked discoloration on the front seat airbag assy and the front seat assy.

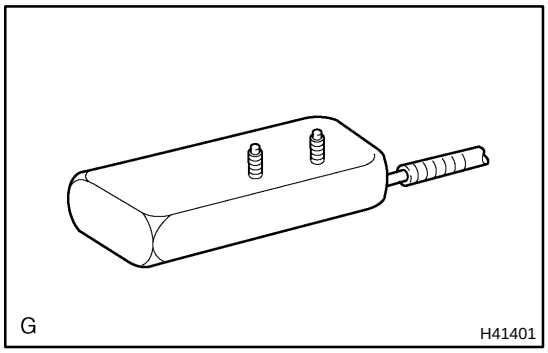

8. FRONT SEAT AIRBAG ASSY(VEHICLE INVOLVED IN COLLISION AND AIRBAG IS NOT DEPLOYED)

(a) Check the diagnostic system (See page 05–424).

(b) Visually check the following items with the front seat airbag assy removed from the front seat assy.

- Check cuts, minute cracks or marked discoloration on the front seat airbag assy.
- Check cuts and cracks in wire harness, and for chipping in connectors.

9. AIRBAG SENSOR ASSY CENTER(VEHICLE NOT INVOLVED IN COLLISION)

(a) Check the diagnostic system (See page 05–424).

10. AIRBAG SENSOR ASSY CENTER(VEHICLE INVOLVED IN COLLISION AND AIRBAG IS NOT DEPLOYED)

(a) Check the diagnostic system (See page 05–424).

11. AIRBAG SENSOR ASSY CENTER(VEHICLE INVOLVED IN COLLISION AND AIRBAG IS DEPLOYED)

(a) Replace the airbag sensor assy center (See page 60–38).

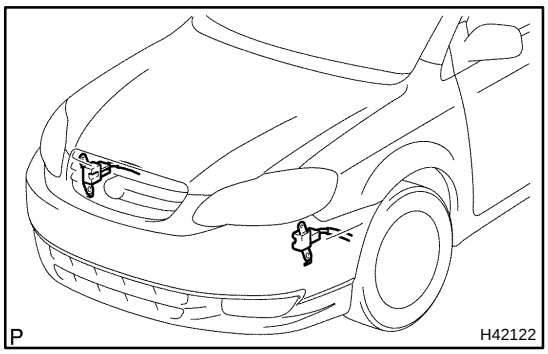

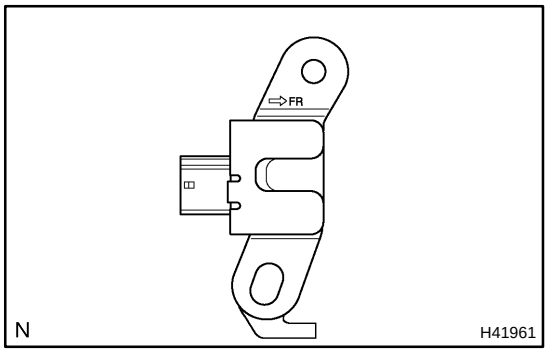

12. AIRBAG FRONT SENSOR(VEHICLE NOT INVOLVED IN COLLISION)

(a) Check the diagnostic system (See page 05–424).

13. AIRBAG FRONT SENSOR(VEHICLE INVOLVED IN COLLISION)

(a) Check the diagnostic system (See page 05–424).

(b) If the front fender of the car or its periphery is damaged, Visually check for damage to the airbag front sensor, which includes the following items even if the airbag was not deployed:

- Cracks, dents or chips in the case
- Cracks, dents, chipping and scratches in the connector
- Peeling off of the label or damage to the serial number

14. SIDE AIRBAG SENSOR ASSY(VEHICLE NOT INVOLVED IN COLLISION)

(a) Check the diagnostic system (See page 05–424).

15. SIDE AIRBAG SENSOR ASSY(VEHICLE INVOLVED IN COLLISION AND AIRBAG IS NOT DEPLOYED)

(a) Check the diagnostic system (See page 05–424).

16. SIDE AIRBAG SENSOR ASSY(VEHICLE INVOLVED IN COLLISION AND AIRBAG IS DEPLOYED)

(a) Replace the front seat airbag assy and side airbag sensor assy (See page 60–44, 72–2).

17. SEAT POSITION AIRBAG SENSOR(VEHICLES NOT INVOLVED IN COLLISION)

(a) Check the diagnostic system (See page 05–424).

18. SEAT POSITION AIRBAG SENSOR(VEHICLE INVOLVED IN COLLISION)

(a) Check the diagnostic system (See page 05–424).

(b) Visually check for damage to the seat position airbag sensor, which includes the following items even if the airbag was not deployed:

- Cracks, dents or chips in the case
- Cracks, dents, chipping and scratches in the connector

19. WIRE HARNESS AND CONNECTOR(VEHICLE NOT INVOLVED IN COLLISION)

(a) Check the diagnostic system (See page 05–424).

20. WIRE HARNESS AND CONNECTOR(VEHICLE INVOLVED IN COLLISION)

(a) Check the diagnostic system (See page 05–424).

(b) Check breaks in all wires of the SRS wire harness, and exposed conductors.

(c) Check to see if the SRS wire harness connectors are cracked or chipped.

HINT:

The SRS wire harness is integrated with the instrument panel wire harness assembly. All the connectors in the system are standard yellow.

INSTRUMENT PANEL PASSENGER AIR BAG ASSY

600C0–01

COMPONENTS

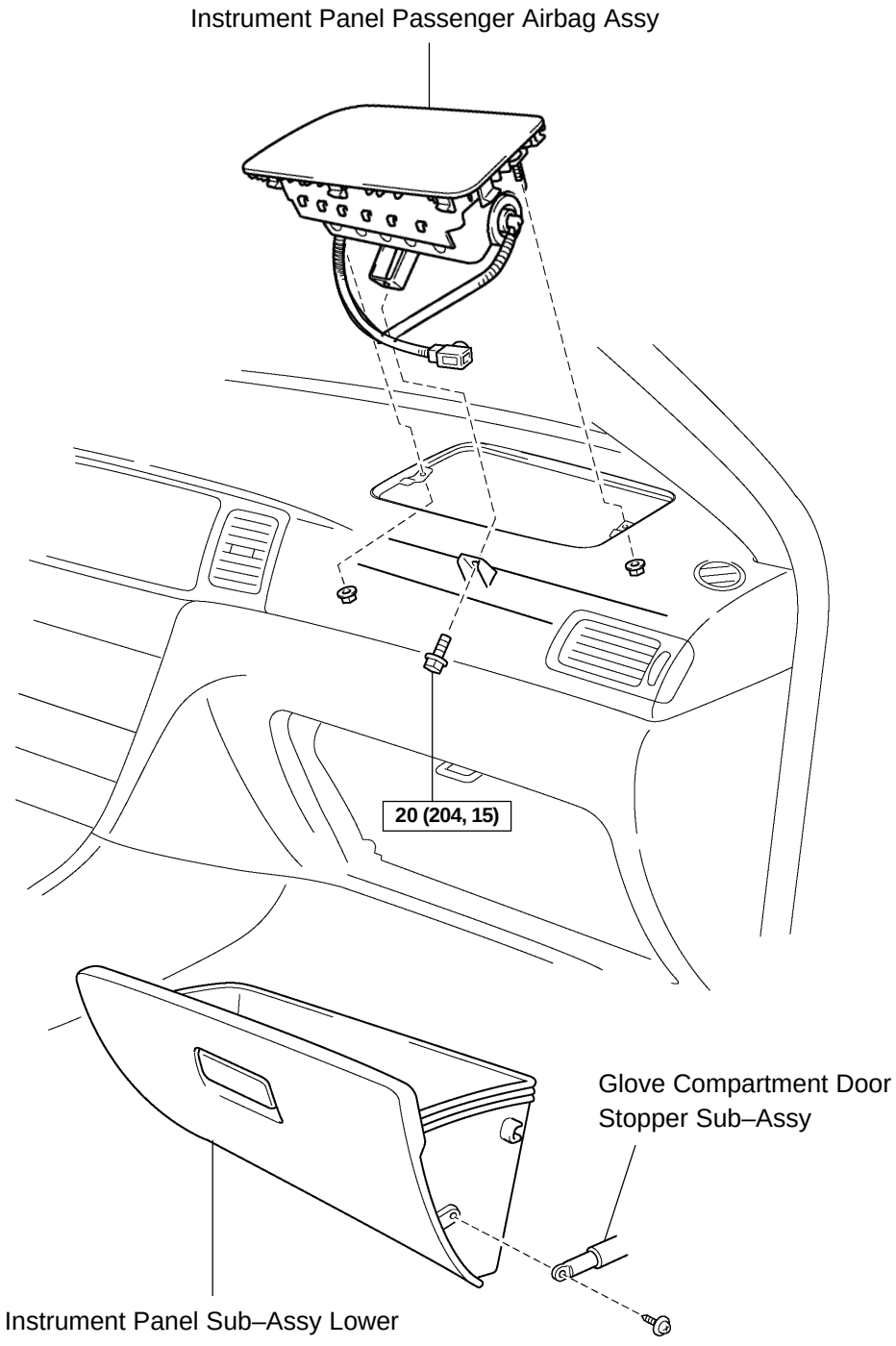

N·m(kgf·cm, ft·lbf) : Specified torque

N

H42046

600C2–02

DISPOSAL

HINT:

When scrapping vehicle equipped with an SRS or disposing of a instrument panel passenger airbag assy, always first deploy the airbag in accordance with the procedure described below. If any abnormality occurs with the airbag deployment, contact the SERVICE DEPT. of TOYOTA MOTOR SALES, U.S.A., INC.

CAUTION:

- **Never dispose of a instrument panel passenger airbag assy which has an undeployed airbag.**
- **The airbag produces a sizeable exploding sound when it deploys, so perform the operation out of doors and the place where it will not create a nuisance to nearby residents.**

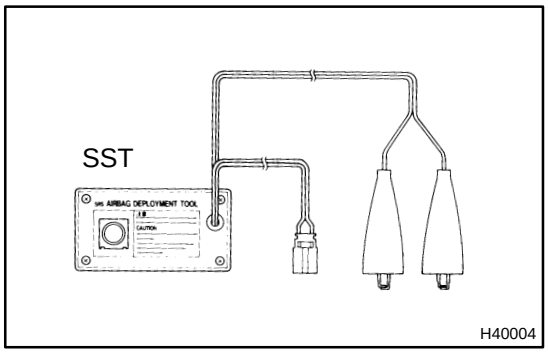

- **When deploying the airbag, always use the specified SST (SRS Airbag Deployment Tool). Perform the operation in a place away from electrical noise.**
- **When deploying an airbag, perform the operation at least 10 m (33 ft) away from the instrument panel passenger airbag assy.**
- **The instrument panel passenger airbag assy is very hot when the airbag is deployed, so leave it alone for at least 30 minutes after deployment.**
- **Use gloves and safety glasses when handling a instrument panel passenger airbag assy with the deployed airbag.**
- **Always wash your hands with water after completing the operation.**
- **Do not apply water, etc. to a instrument panel passenger airbag assy with the deployed airbag.**

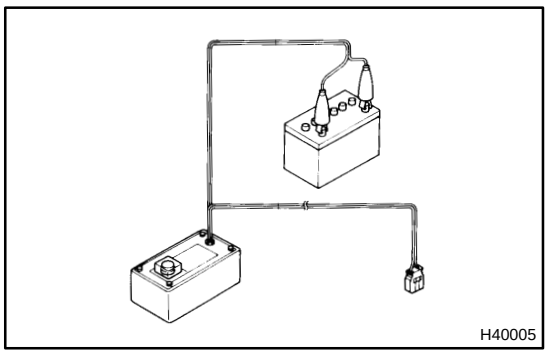

1. DISPOSE INSTRUMENT PANEL PASSENGER AIR BAG ASSY (WHEN SCRAPPING VEHICLE DEPLOYMENT METHOD)

HINT:

Prepare a battery for the power source to deploy the airbag.

(a) Check the function of SST (See step 1–(a) on page 60–14).

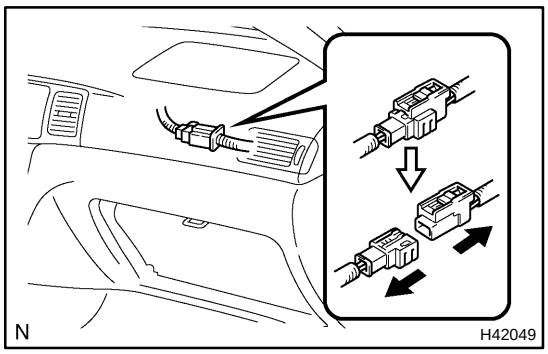

(b) Disconnect the airbag connector.

(1) Remove the instrument panel sub–assy lower.

NOTICE:

When handling the airbag connector, take care not to damage the airbag wire harness.

(2) Disconnect the airbag connectors.

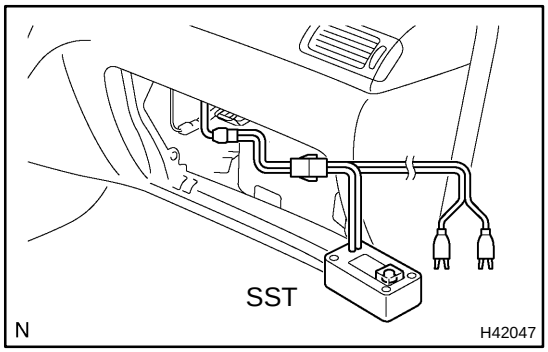

(c) Set SST.

(1) Connect the connectors of the 2 SST to the instrument panel passenger airbag assy connectors.

SST 09082–00700, 09082–00780

NOTICE:

To avoid damaging the SST connector and wire harness, do not lock the secondary lock of the twin lock.

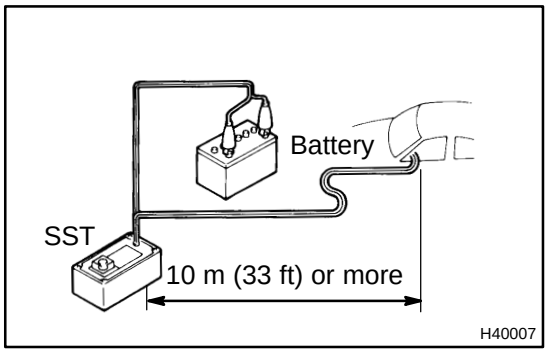

(2) Move the SST at least 10 m (33 ft) away from the front of the vehicle.

(3) Close all the doors and windows of the vehicle.

NOTICE:

Take care not to damage the SST wire harness.

(4) Connect the red clip of the SST to the battery positive (+) terminal and the black clip to the negative (–) terminal.

(d) Deploy the airbag.

(1) Check that no one is inside the vehicle or within 10 m (33 ft) area around the vehicle.

(2) Press the SST activation switch and deploy the airbag.

HINT:

The airbag deploys simultaneously when the LED of the SST activation switch lights up.

(e) Dispose the instrument panel passenger airbag assy.

CAUTION:

- **The instrument panel passenger airbag assy is very hot when the airbag is deployed, so leave it for at least 30 minutes after deployment.**
- **Use gloves and safety glasses when handling a instrument panel passenger airbag assy with the deployed airbag.**
- **Always wash your hands with water after completing the operation.**
- **Do not apply water, etc. to a instrument panel passenger airbag assy with the deployed airbag.**

- **When moving a vehicle for scrapping which has a instrument panel passenger airbag assy with the deployed airbag, use gloves and safety glasses.**

HINT:

When scrapping a vehicle, deploy the airbag and scrap the vehicle with the instrument panel passenger airbag assy being installed.

2. DISPOSE INSTRUMENT PANEL PASSENGER AIR BAG ASSY (WHEN DISPOSING OF AIRBAG ASSEMBLY DEPLOYMENT METHOD)

NOTICE:

- **When disposing of the instrument panel passenger airbag assy only, never use the customer's vehicle to deploy the airbag.**
- **Be sure to follow the procedure given below when deploying the airbag.**

HINT:

Prepare a battery for the power source to deploy the airbag.

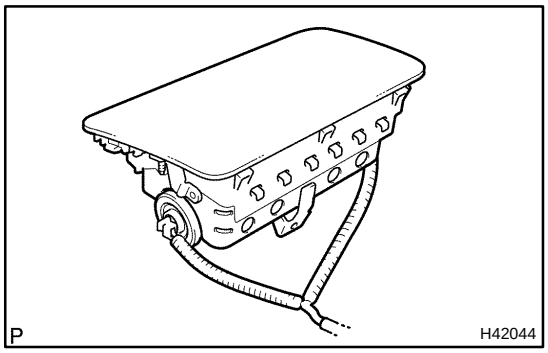

(a) Remove the instrument panel passenger airbag assy (See page 60–25).

CAUTION:

- **When removing the instrument panel passenger airbag assy, work must be started 90 seconds after the ignition switch is turned to the "LOCK" position and the negative (–) terminal cable is disconnected from the battery.**
- **Store the instrument panel passenger airbag assy with the airbag deployment side facing upward.**

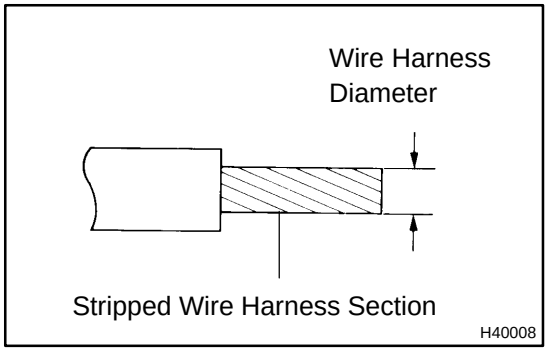

(b) Using a service–purpose wire harness for the vehicle, tie down the instrument panel passenger airbag assy to the tire.

Wire harness: Stripped wire harness section 1.25 mm^2 or more (0.0019 $in.^2$ or more)

CAUTION:

If the instrument panel passenger airbag assy is tied down with too thin wire harness, it may snap. This is highly dangerous. Always use a wire harness which is at least 1.25 mm^2 (0.0019 $in.^2$).

HINT:

To calculate the area of the stripped wire harness section:

Area = 3.14 X $(Diameter)^2$ divided by 4

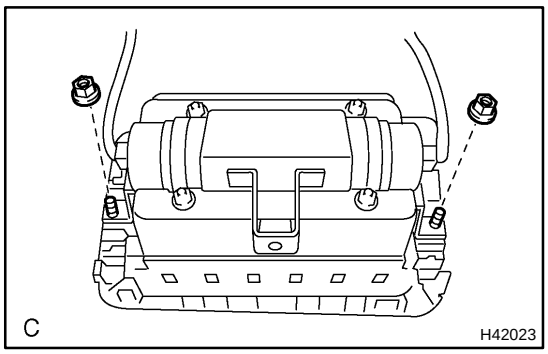

(1) Install the 2 nuts to the instrument panel passenger airbag assy.

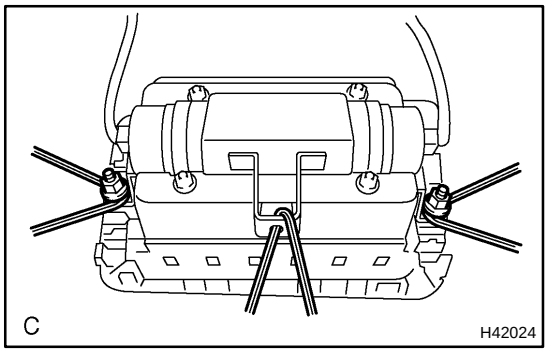

(2) Wind the wire harness around the brackets, as shown in the illustration.
(3) Position the instrument panel passenger airbag assy inside the tire with the airbag deployment side facing inside.

Tire size: Must exceed the following dimensions–
Width: 185 mm (7.28 in.)
Inner diameter: 360 mm (14.17 in.)

CAUTION:

- **Make sure that the wire harness is tight. It is very dangerous if the loosened wire harness results in the instrument panel passenger airbag assy coming free due to the shock from the airbag deployment.**
- **Always tie down the instrument panel passenger airbag assy with the airbag deployment side facing inside.**

NOTICE:

The tire will be marked by the airbag deployment, so use a redundant tire.

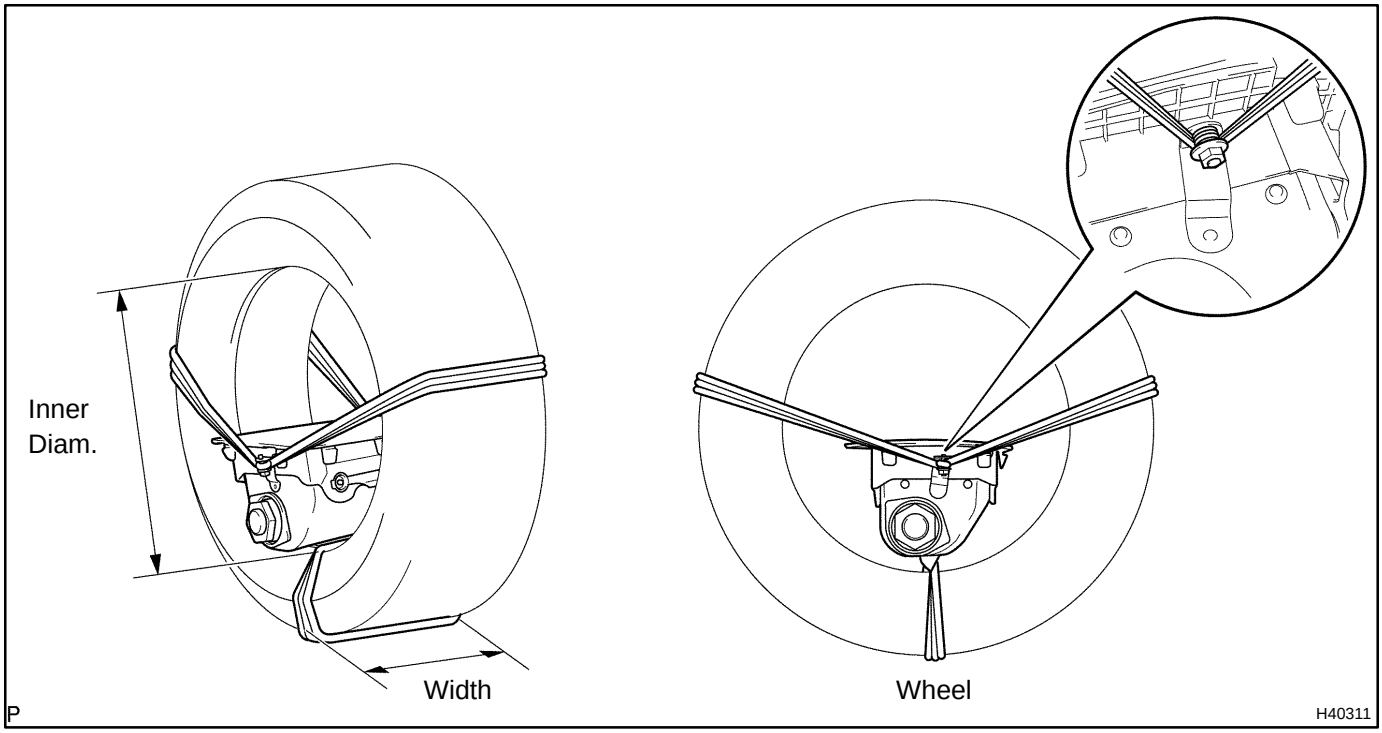

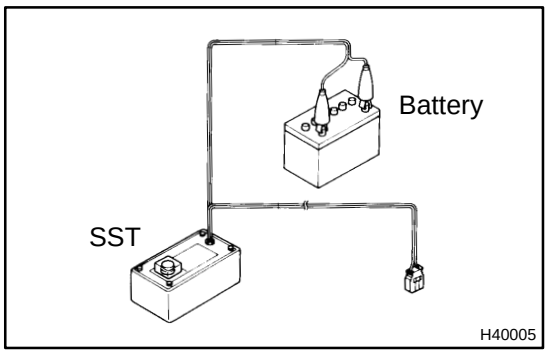

(c) Check the function of SST (See step 1–(a) on page 60–14).

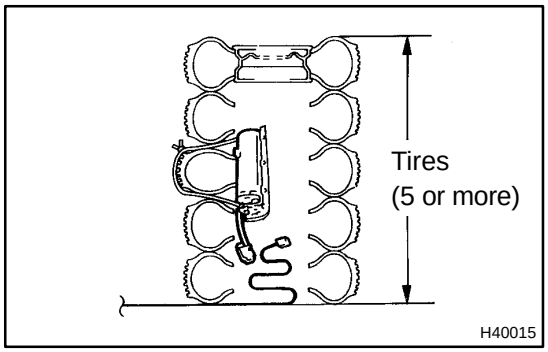

(d) Place tires.

(1) Place at least 2 tires under the tire to which the instrument panel passenger airbag assy is tied.

(2) Place at least 2 tires over the tire to which the instrument panel passenger airbag assy is tied. The top tire should have the wheel installed.

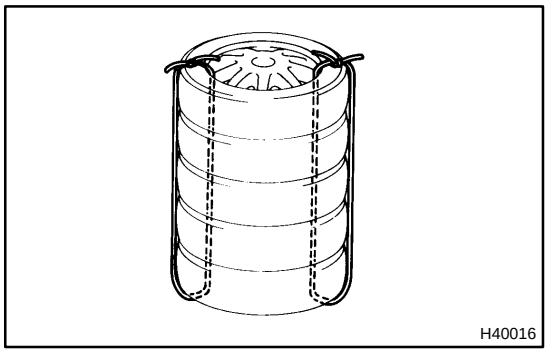

(3) Tie the tires together with 2 wire harness.

CAUTION:

Make sure that the wire harness is tight. It is very dangerous if loosened wire harness result in the tires coming free due to the shock from the airbag deploying.

HINT:

Place the SST connector and wire harness inside tires. Secure at least 1 m (3 ft) of slack for the wire harness.

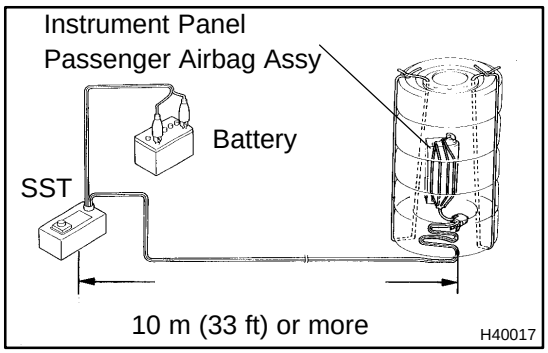

(e) Set SST.

Connect the connectors of the 2 SST to the instrument panel passenger airbag assy connector.

SST 09082–00700, 09082–00780

NOTICE:

To avoid damaging the SST connector and wire harness, do not lock the secondary lock of the twin lock.

(f) Deploy the airbag.

(1) Connect the SST red clip to the battery positive (+) terminal and the black clip to the battery negative (–) terminal.

(2) Check that no one is within 10 m (33 ft) radius around the tire which the instrument panel passenger airbag assy is tied to.

(3) Press the SST activation switch and deploy the airbag.

HINT:

The airbag deploys simultaneously when the LED of the SST activation switch lights up.

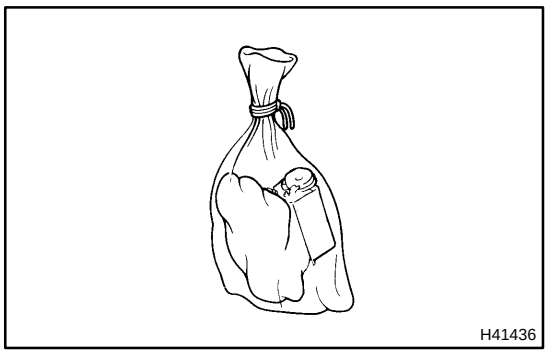

(g) Dispose of the instrument panel passenger airbag assy.

CAUTION:

- **The instrument panel passenger airbag assy is very hot when the airbag is deployed, so leave it alone for at least 30 minutes after deployment.**
- **Use gloves and safety glasses when handling a instrument panel passenger airbag assy with the deployed airbag.**
- **Always wash your hands with water after completing the operation.**
- **Do not apply water, etc. to a instrument panel passenger airbag assy with the deployed airbag.**

(1) Remove the instrument panel passenger airbag assy from the tire.

(2) Place the instrument panel passenger airbag assy in a vinyl bag, tie the end tightly and dispose of it in the same way as other general parts.

600C1–02

REPLACEMENT

HINT:

COMPONENTS: See page 60–24

1. PRECAUTION (See page 60–1)

2. DISCONNECT BATTERY NEGATIVE TERMINAL (See page 60–1)

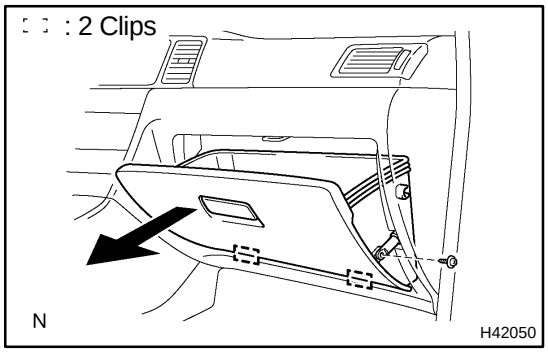

3. REMOVE INSTRUMENT PANEL SUB–ASSY LOWER

(a) Remove the screw from the glove compartment door stopper sub–assy.

(b) Pull the instrument panel sub–assy lower to remove it.

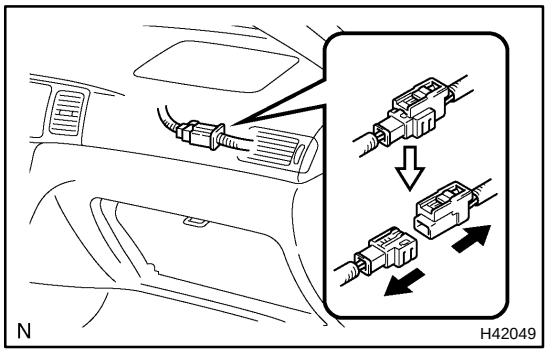

4. SEPARATE PASSENGER AIRBAG CONNECTOR

(a) Separate the instrument panel passenger airbag assy connector.

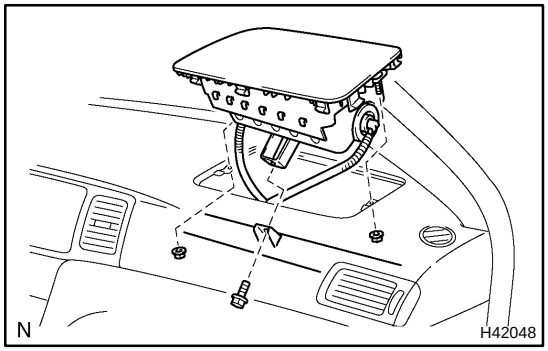

5. REMOVE INSTRUMENT PANEL PASSENGER AIR BAG ASSY

(a) Remove the bolt.

(b) Remove the 2 nuts and instrument panel passenger air-bag assy.

6. INSTALL INSTRUMENT PANEL PASSENGER AIR BAG ASSY

Torque:

Bolt: 20 N·m (204 kgf·cm, 15 ft·lbf)

7. INSPECT INSTRUMENT PANEL PASSENGER AIR BAG ASSY (See page 60–8)

8. INSPECT SRS WARNING LIGHT (See page 05–424)

SUPPLEMENTAL RESTRAINT SYSTEM

600BX–02

PRECAUTION

CAUTION:

- **The COROLLA is equipped with SRS, which comprises a driver airbag, front passenger airbag and side airbag. Failure to carry out service operations in the correct sequence could cause the SRS to unexpectedly deploy during servicing, possibly leading to a serious accident. Further, if a mistake is made in servicing the SRS, it is possible that the SRS may fail to operate when required. Before performing servicing (including removal or installation of parts, inspection or replacement), be sure to read the following items carefully, then follow the correct procedures described in the repair manual.**
- **Work must be started 90 seconds after the ignition switch is turned to the "LOCK" position and the negative (–) terminal cable is disconnected from the battery.**
  (The SRS is equipped with a back–up power source so that if work is started within 90 seconds from disconnecting the negative (–) terminal cable of the battery, the SRS may be deployed.)
- **Do not expose the horn button assy, instrument panel passenger airbag assy, airbag sensor assy center, airbag front sensor, front seat airbag assy, side airbag sensor assy or seat position airbag sensor directly to hot air or flames.**

NOTICE:

- **Malfunction symptoms of the SRS are difficult to confirm, so the DTCs become the most important source of information when troubleshooting. When troubleshooting the SRS, always inspect the DTCs before disconnecting the battery.**
- **Even in cases of a minor collision where the SRS does not deploy, the horn button assy, instrument panel passenger airbag assy, airbag sensor assy center, airbag front sensor, front seat airbag assy, side airbag sensor assy and seat position airbag sensor should be inspected (See page 60–8).**
- **Before repairs, remove the airbag sensor if shocks are likely to be applied to the sensor during repairs.**
- **Never use SRS parts from another vehicle. When replacing parts, replace them with new parts.**
- **Never disassemble and repair the horn button assy, instrument panel passenger airbag assy, airbag sensor assy center, airbag front sensor, front seat airbag assy, side airbag sensor assy or seat position airbag sensor in order to reuse it.**
- **If the horn button assy, instrument panel passenger airbag assy, airbag sensor assy center, airbag front sensor, front seat airbag assy, side airbag sensor assy, seat position airbag sensor has been dropped, or if there are cracks, dents or other defects in the case, bracket or connector, replace it with a new one.**
- **Use a volt/ohmmeter with high impedance (10 kΩ/V minimum) for troubleshooting the system's electrical circuits.**
- **Information labels are attached to the periphery of the SRS components. Follow the instructions on the notices.**
- **After work on the SRS is completed, perform the SRS warning light check (See page 05–424).**
- **When the negative (–) terminal cable is disconnected from the battery, the memory of the clock and audio system will be canceled. So before starting work, make a record of the contents memorized in the audio memory system. When work is finished, reset the audio systems as they were before and adjust the clock. To avoid erasing the memory in each memory system, never use a back–up power supply from outside the vehicle.**
- **If the vehicle is equipped with a mobile communication system, refer to the precaution in the INTRODUCTION section.**

1. SRS CONNECTORS

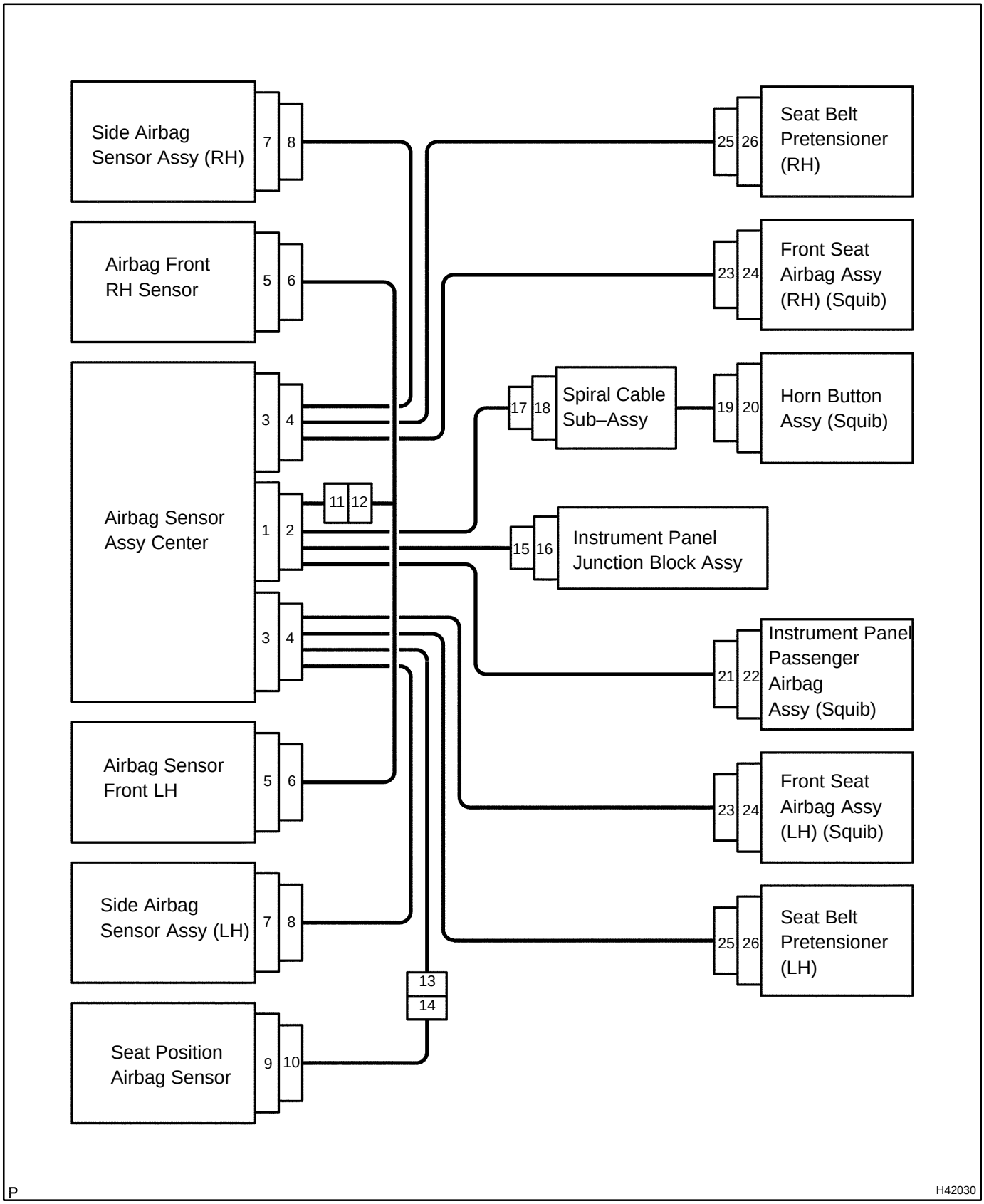

No.	Item	Application
(1)	Terminal Twin–Lock Mechanism	Connectors 2, 4, 6, 8, 10, 11, 12, 13, 14, 15, 17, 21, 22
(2)	Airbag Activation Prevention Mechanism	Connectors 2, 4, 16, 18, 20, 22, 24
(3)	Electrical Connection Check Mechanism	Connectors 1, 2, 3, 4
(4)	Half Connection Prevention Mechanism	Connectors 6, 8, 12, 21
(5)	Connector Lock Mechanism	Connectors 17, 19, 23

(a) All connectors in the SRS are colored in yellow to distinguish them from other connectors. Connectors having special functions and specifically designed for the SRS are used in the locations shown on the previous page to ensure high reliability. These connectors use durable gold–plated terminals.

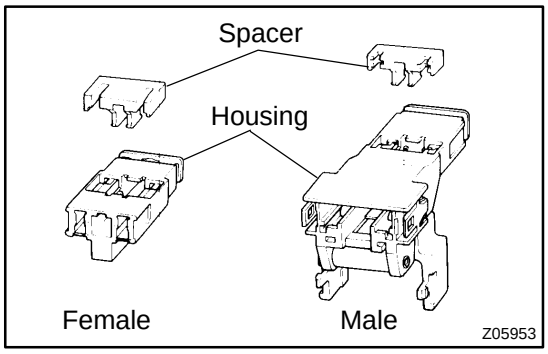

(1) Terminal twin–lock mechanism:
Each connector has a two–piece component consisting of a housing and a spacer. This design enables the terminal to be locked securely by two locking devices (the retainer and the lance) to prevent terminals from coming out.

(2) Airbag activation prevention mechanism:
Each connector contains a short spring plate. When the connector is disconnected, the short spring plate automatically connects positive (+) terminal and negative (–) terminal of the squib.

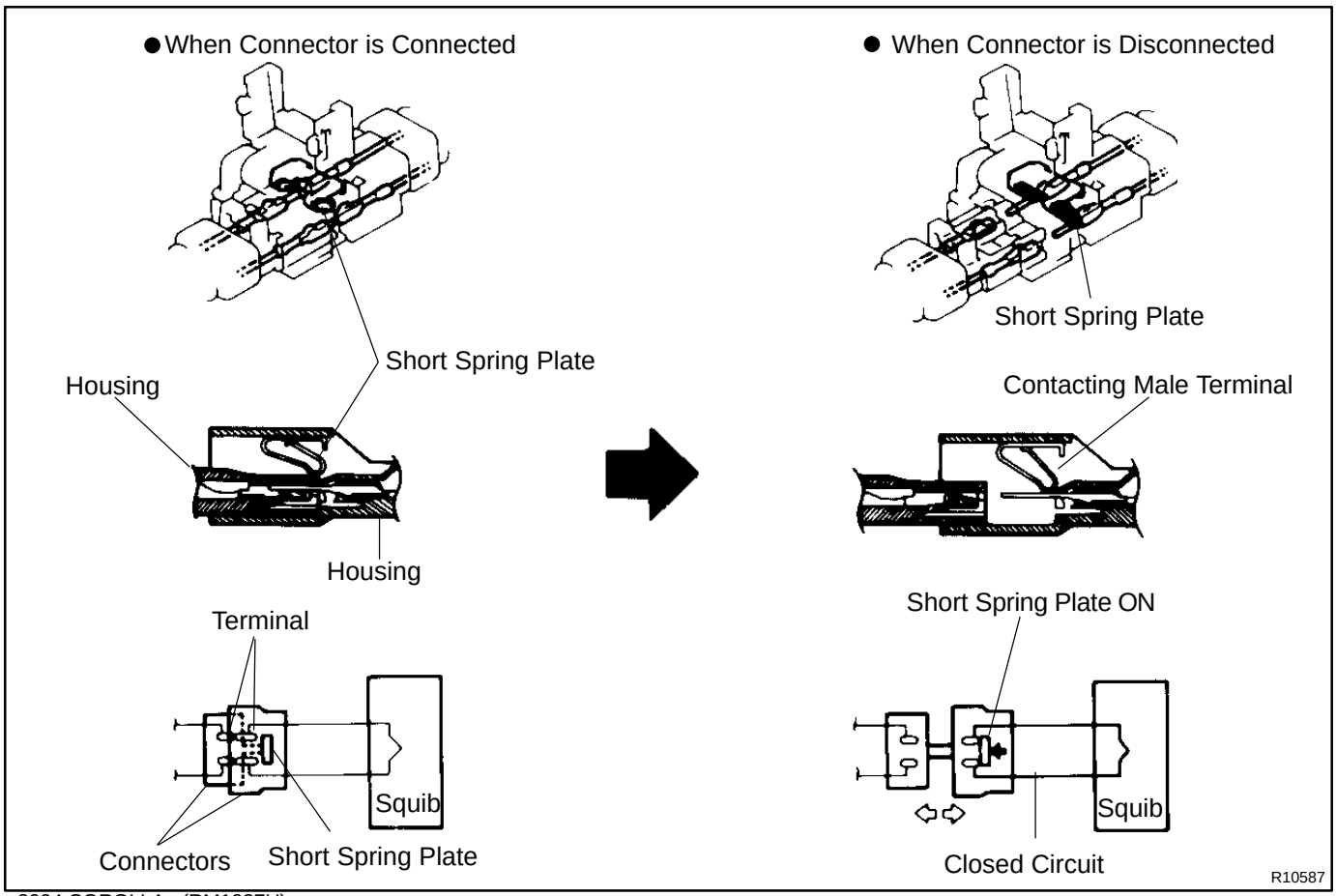

HINT:
The type of connector is shown in the diagram on the previous page.

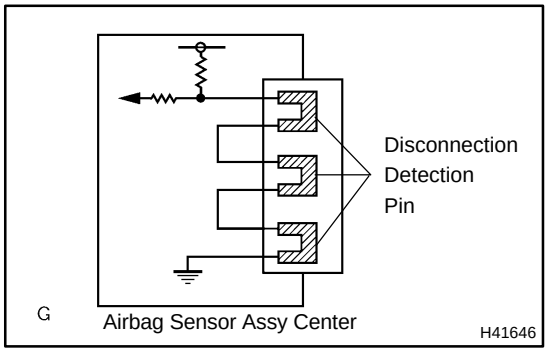

(3) Electrical connection check mechanism:
This mechanism electrically checks that connectors are connected correctly and completely. The electrical connection check mechanism is designed so that the disconnection detection pin connects with the diagnosis terminals when the connector housing lock is locked.

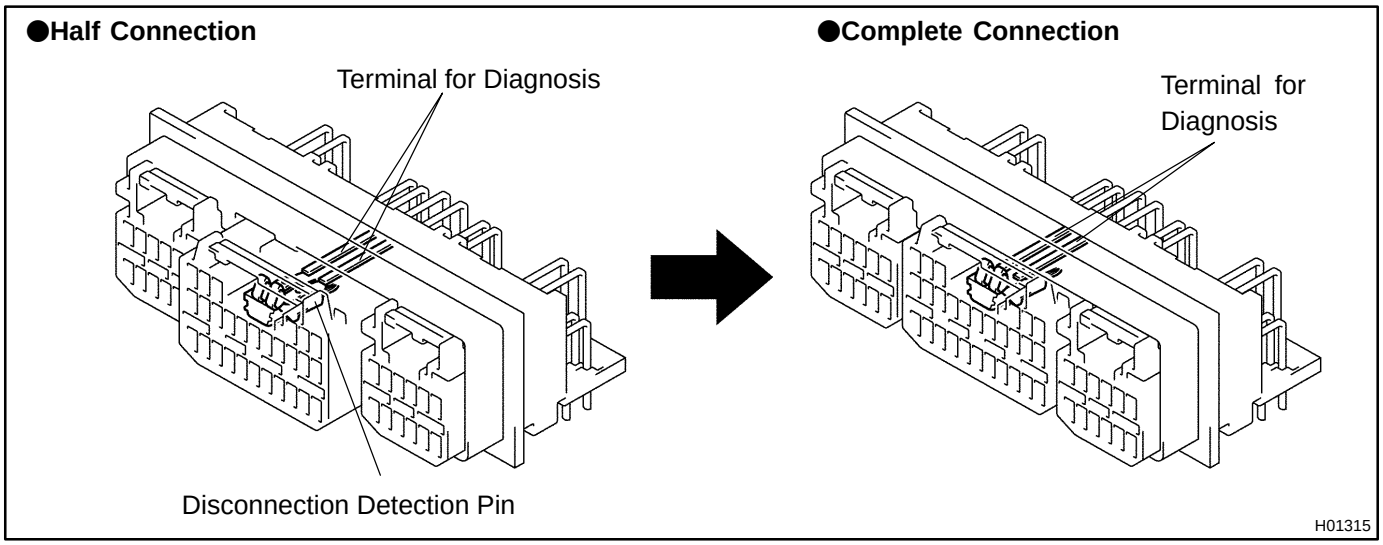

HINT:
The connectors shown in this illustration are connectors, ”1”, ”2”, ”3” and ”4” in step 1.

(4) Half connection prevention mechanism:
If the connector is not completely connected, the connector is disconnected due to the spring operation to the extent that no continuity exists.

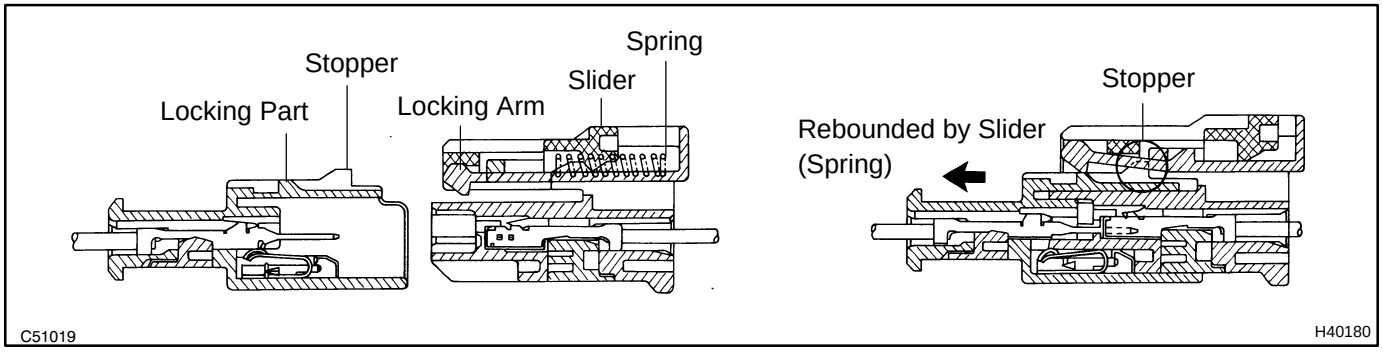

(5) Connector lock mechanism:
Locking the connector lock button securely connects the connector.

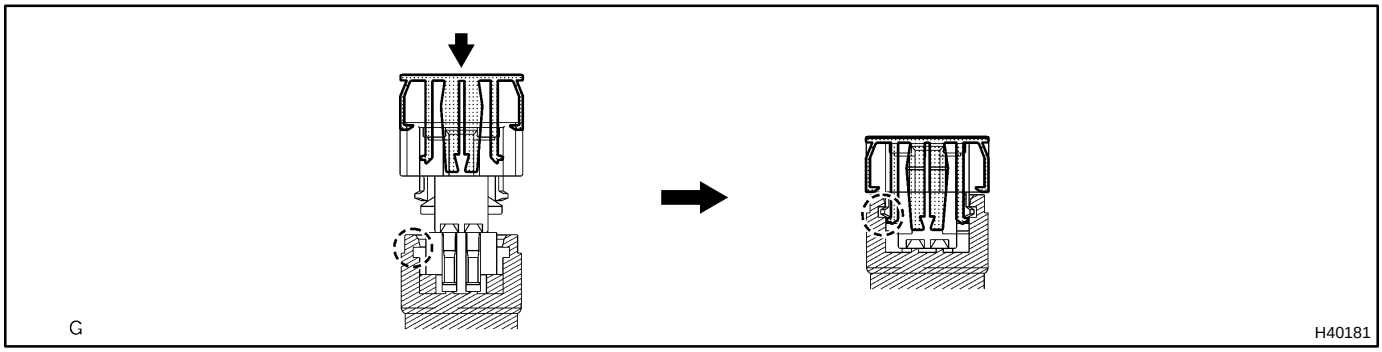

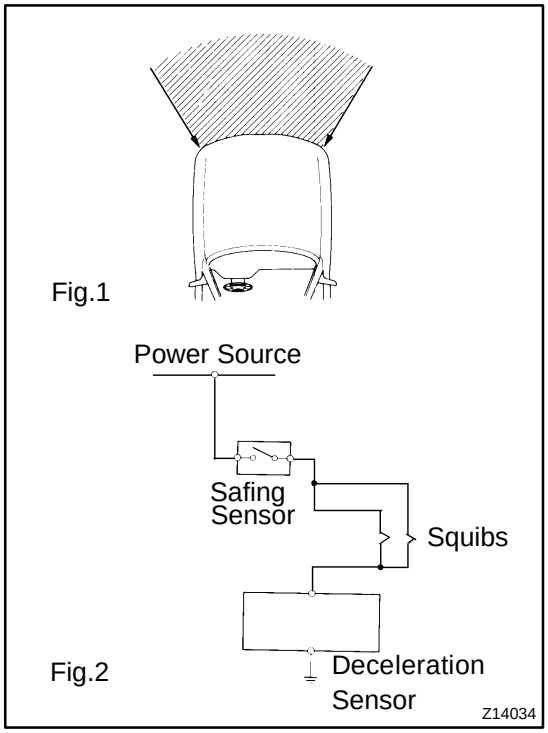

(b) When the vehicle is involved in a frontal collision in the hatched area (Fig. 1) and the shock is larger than the predetermined level, the SRS is activated automatically. A safing sensor is designed to go on at a smaller deceleration rate than the airbag sensor. As illustrated in Fig. 2, ignition is caused when current flows to the squib, which happens when a safing sensor and the deceleration sensor go on simultaneously. When a deceleration force acts on the sensors, 2 squibs in the driver airbag and front passenger airbag ignite and generate gas. The gas discharging into the driver airbag and front passenger airbag rapidly increases the pressure inside the bags, breaking open the horn button assy and instrument panel. Bag inflation then ends, and the bags deflate as the gas is discharged through discharge holes at the bag's rear or side.

2. DISCONNECTION OF CONNECTOR FRONT SEAT AIRBAG ASSY

(a) Place a finger on the slider.
(b) Slide the slider to release lock.
(c) Disconnect the connector.

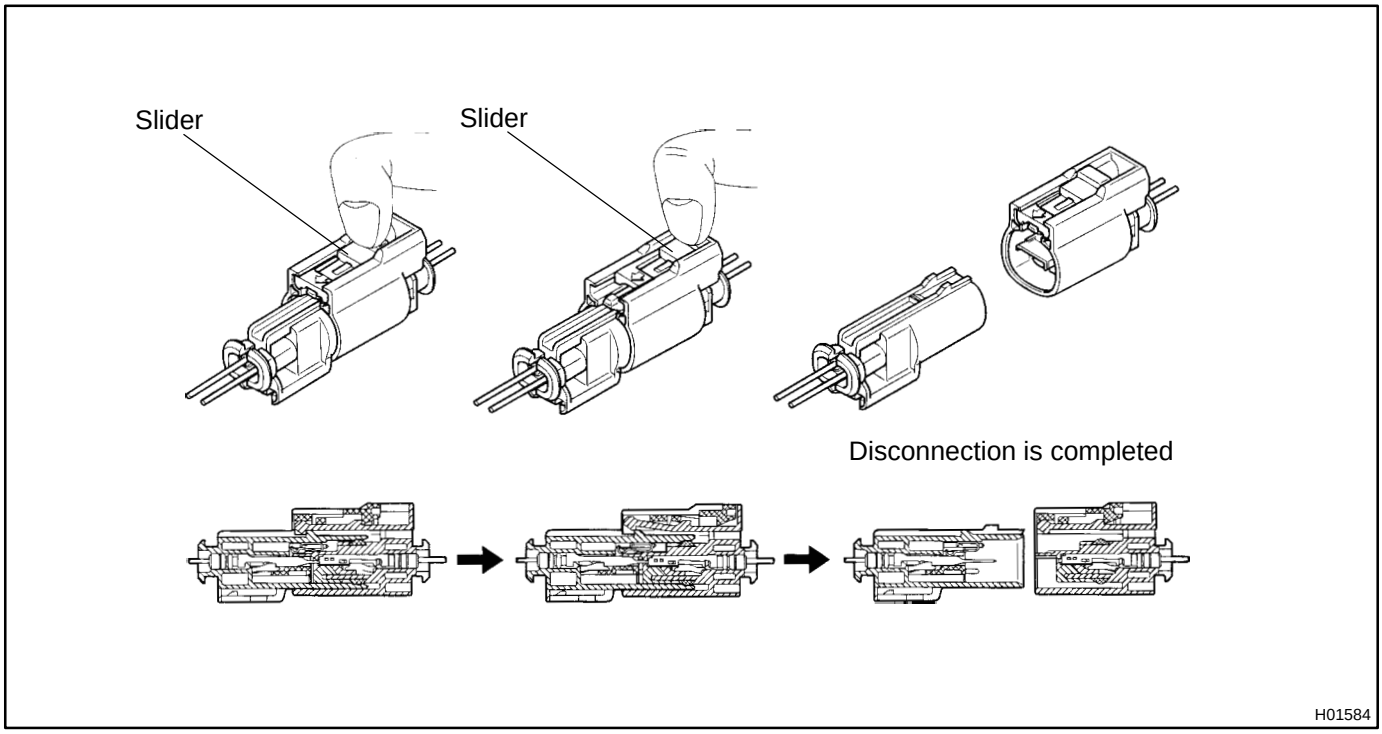

3. CONNECTION OF CONNECTOR FOR FRONT SEAT AIRBAG ASSY

(a) Align a lock part of male connector and a slider of female connector in the same direction as shown in the illustration, fit in them without rubbing.
(b) Be sure to insert until they are locked. After fitting in, pull them slightly to check that they are locked. (When locked, make sure that the outer returns to its original position and sound at the time of fitting in can be heard.)

HINT:

- As the slider slides, do not touch it.
- Be careful not to deform the release board. If the release board is deformed, replace it with a new one.

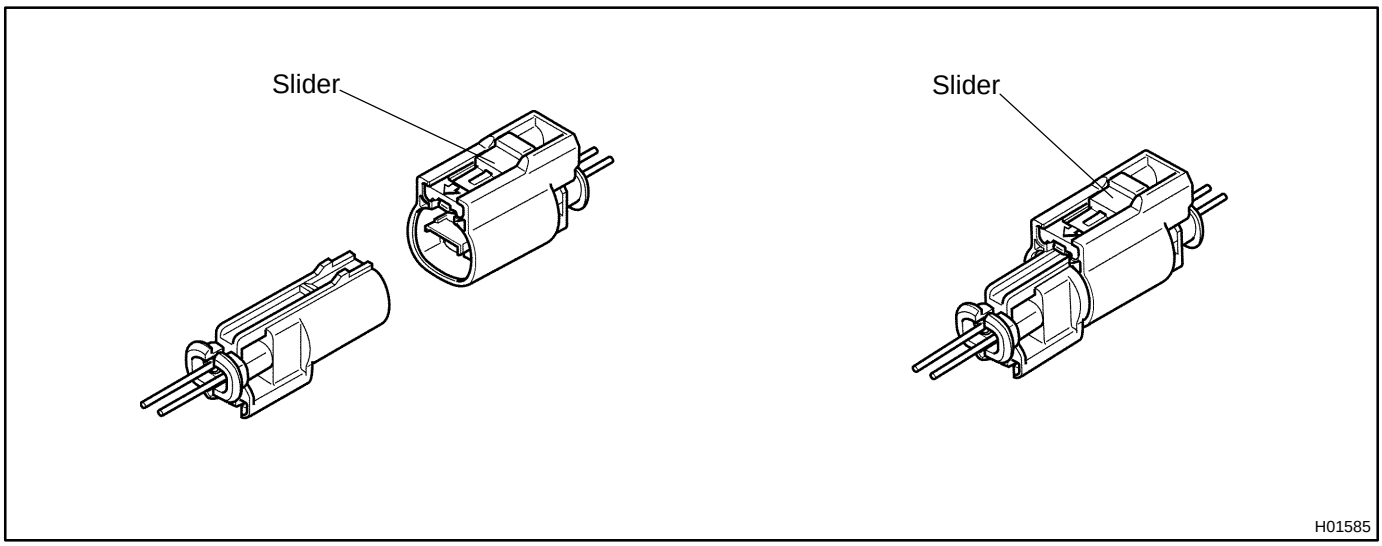

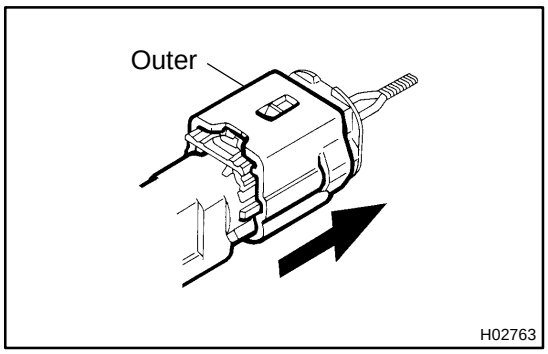

4. DISCONNECTION OF AIRBAG FRONT SENSOR AND SIDE AIRBAG SENSOR

(a) While holding both flank sides of the outer, slide the outer in the direction shown by an arrow.

(b) Release the lock of the connectors, then disconnect the connectors.

HINT:

Be sure to hold both flank sides of the outer. If holding the top and bottom sides, it will obstruct disconnection.

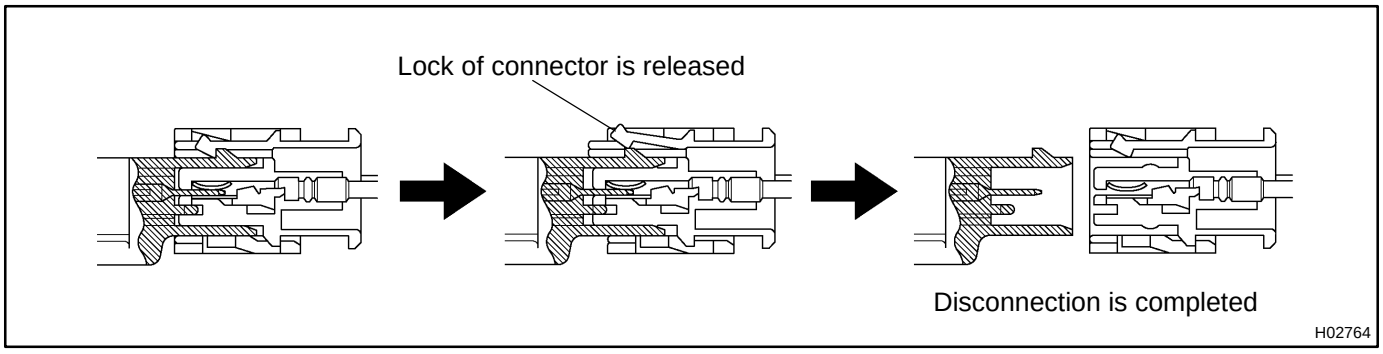

5. CONNECTION OF CONNECTORS FOR AIRBAG FRONT SENSOR AND SIDE AIRBAG SENSOR

(a) Align the male connector (on the side of sensor) with female connector in the same direction as shown in the illustration and fit them in without rubbing.

(b) As they are fitted in, the outer slides rearward. Press it until the outer returns to its original position again.

If fitting stops half way, connectors will separate.

(c) Be sure to insert until they are locked. After fitting in, pull them slightly to check that they are locked. (When locked, make sure that the outer returns to its original position and sound at the time of fitting in can be heard.)

HINT:

- Do not fit in while holding the outer.
- When fitting in, the outer slides. Do not touch it.

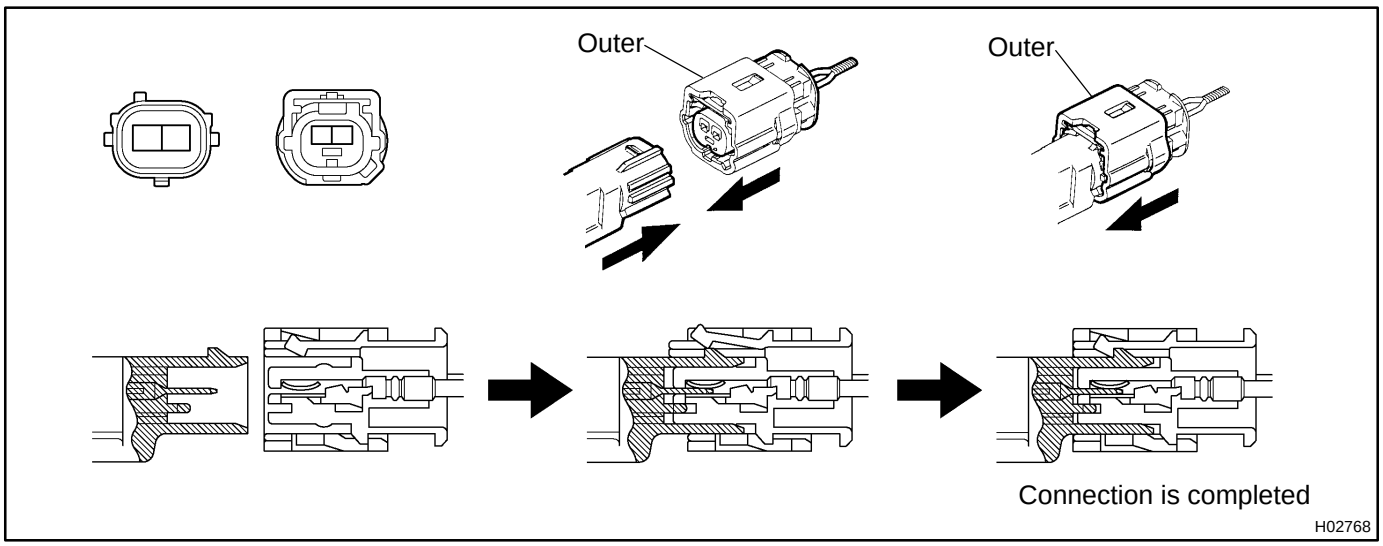

SEAT POSITION AIR BAG SENSOR

60080–02

COMPONENTS

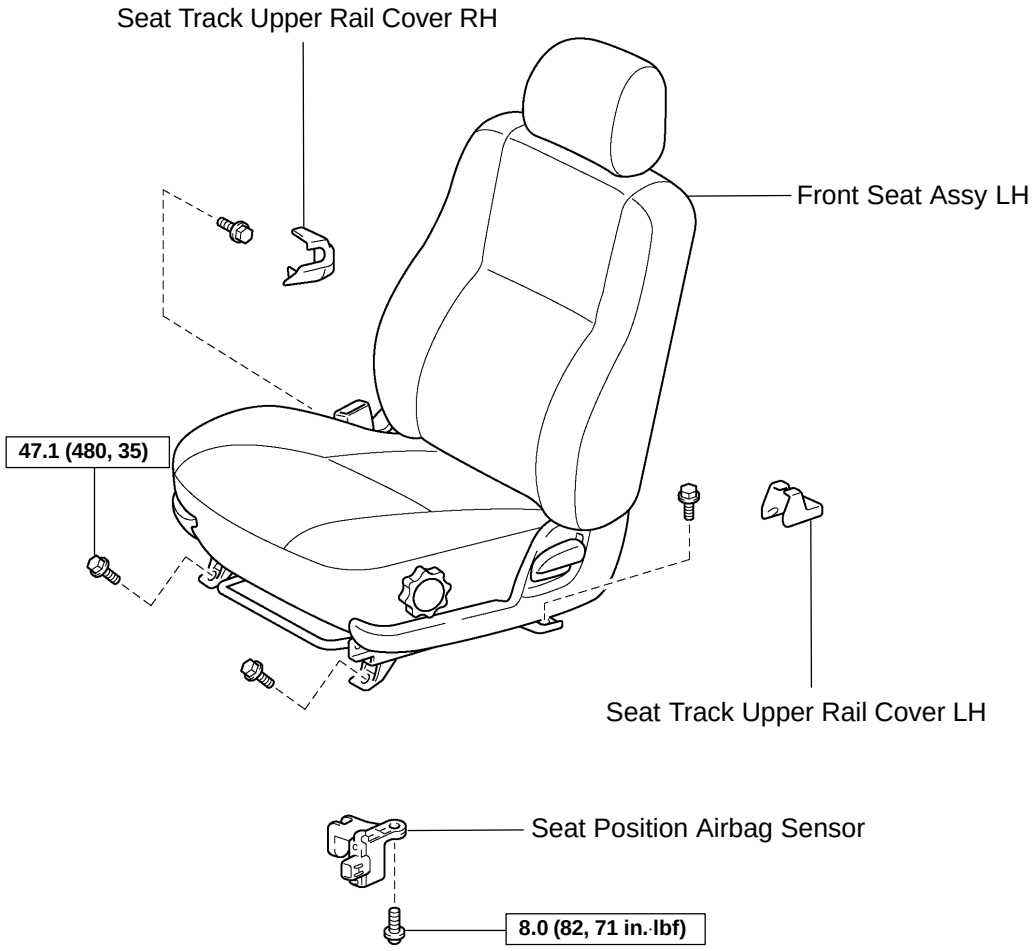

N N·m (kgf·cm, ft·lbf) : Specified torque

H42055

60081–04

REPLACEMENT

HINT:

COMPONENTS: See page 60–45

1. **PRECAUTION (See page 60–1)**
2. **DISCONNECT BATTERY NEGATIVE TERMINAL (See page 60–1)**
3. **REMOVE SEAT TRACK UPPER RAIL COVER RH**
4. **REMOVE SEAT TRACK UPPER RAIL COVER LH**
5. **REMOVE FRONT SEAT ASSY LH (See page 72–2)**

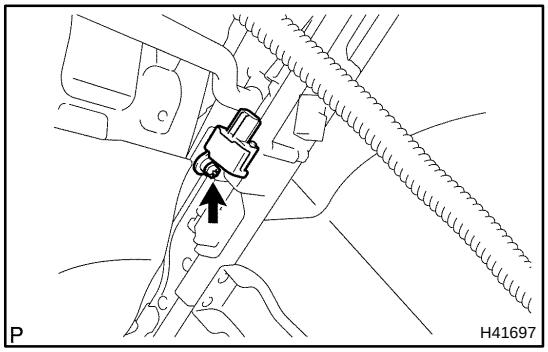

6. **REMOVE SEAT POSITION AIR BAG SENSOR**

(a) Disconnect the connector of the seat position airbag sensor.

(b) Using a torx socket wrench (T30), remove the torx screw and seat position airbag sensor.

7. **INSTALL SEAT POSITION AIR BAG SENSOR**

(a) Using a torx socket wrench (T30), install the seat position airbag sensor with the torx screw.
Torque: 8.0 N·m (82 kgf·cm, 71 in.·lbf)

(b) Connect the connector of the seat position airbag sensor.

NOTICE:

- **Installation of the connector is done with the seat position airbag sensor installed. Make sure the seat position airbag sensor is installed to the specified torque.**
- **If the seat position airbag sensor has been dropped, or there are cracks, dents or other defects in the case, bracket or connector, replace the seat position airbag sensor with a new one.**
- **When installing the seat position airbag sensor, take care that the SRS wiring does not interfere with other parts and is not pinched between other parts.**
- **After installation, shake the seat position airbag sensor to check that there is no looseness.**

8. **INSTALL FRONT SEAT ASSY LH**
Torque: 47.1 N·m (480 kgf·cm, 35 ft·lbf)
9. **INSPECT SRS WARNING LIGHT (See page 05–424)**

SIDE AIR BAG SENSOR ASSY RH

6007W–02

COMPONENTS

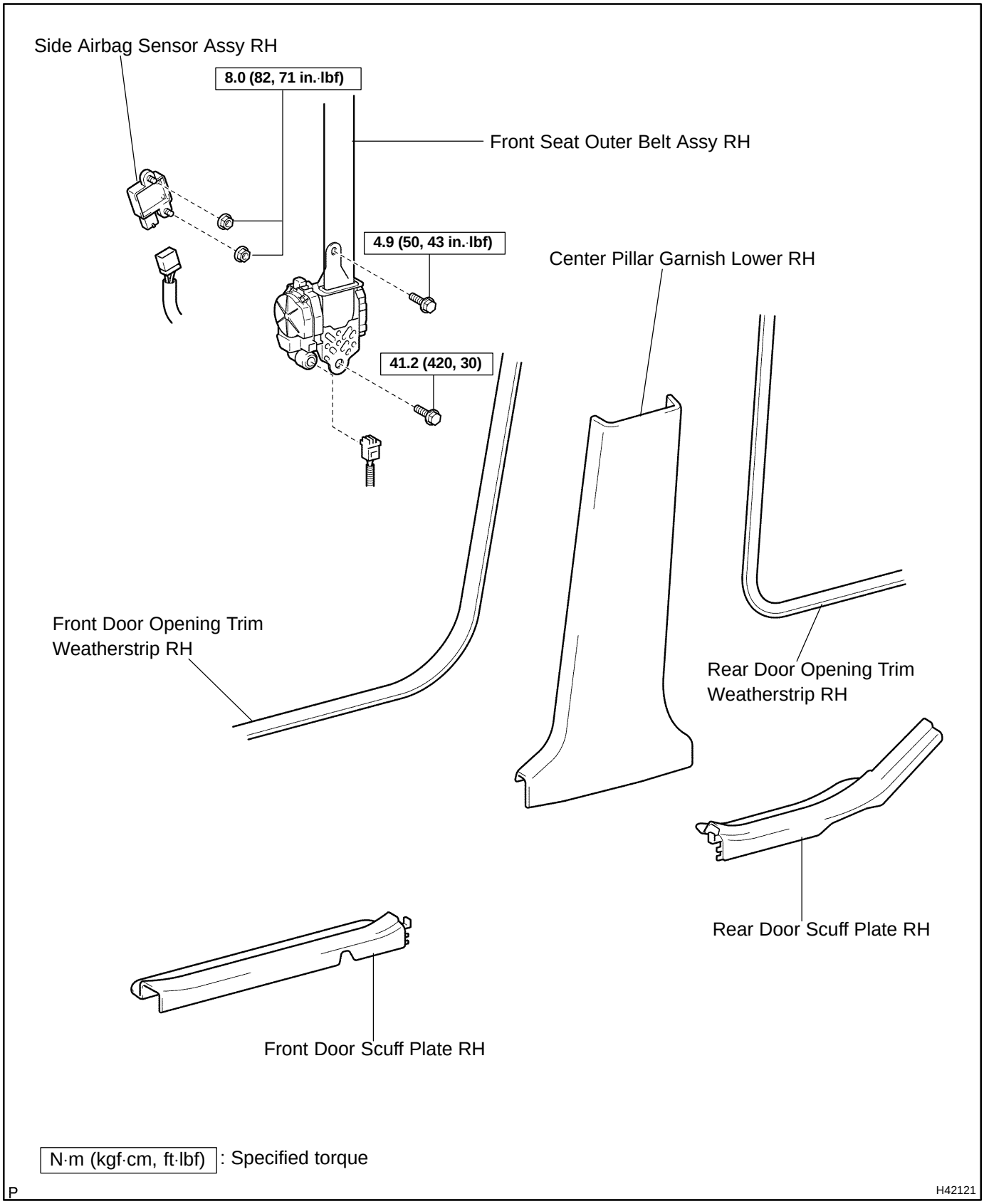

6007X–03

REPLACEMENT

HINT:

COMPONENTS: See page 60–43

1. **PRECAUTION (See page 60–1)**
2. **DISCONNECT BATTERY NEGATIVE TERMINAL (See page 60–1)**
3. **REMOVE FRONT DOOR SCUFF PLATE RH (See page 76–21)**
4. **REMOVE REAR DOOR SCUFF PLATE RH (See page 76–21)**
5. **REMOVE FRONT DOOR OPENING TRIM RH (See page 76–21)**
6. **REMOVE REAR DOOR OPENING TRIM RH (See page 76–21)**
7. **REMOVE LAP BELT OUTER ANCHOR COVER (See page 76–21)**
8. **REMOVE CENTER PILLAR GARNISH LOWER RH (See page 76–21)**
9. **REMOVE FRONT SEAT OUTER BELT ASSY RH (See page 61–7)**

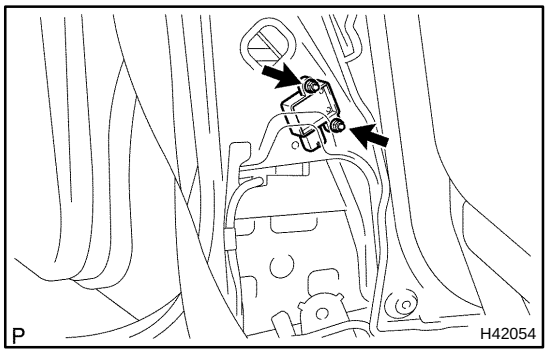

10. **REMOVE SIDE AIR BAG SENSOR ASSY RH**

(a) Disconnect the connector from the side airbag sensor assy RH.

(b) Remove the 2 nuts and side airbag sensor assy RH.

11. **INSPECT SIDE AIR BAG SENSOR ASSY RH (See page 60–8)**
12. **INSTALL SIDE AIR BAG SENSOR ASSY RH**

(a) Install the 2 nuts and side airbag sensor assy RH.
Torque: 8.0 N·m (82 kgf·cm, 71 in·lbf)

(b) Connect the side airbag sensor connector.

NOTICE:

- **Installation of the connector is done with the sensor assembly installed. Make sure that the sensor assembly is installed to the specified torque.**
- **If the sensor assembly has been dropped, or there are cracks, dents or other defects in the case, bracket or connector, replace the sensor assembly with a new one.**
- **When installing the sensor assembly, take care that the SRS wiring does not interfere with other parts and is not pinched between other parts.**
- **After installation, shake the sensor assembly to check that there is no looseness.**

13. **INSTALL FRONT SEAT OUTER BELT ASSY RH**
Torque:
Upper bolt: 4.9 N·m (50 kgf·cm, 43 in.·lbf)
Lower bolt: 41.2 N·m (420 kgf·cm, 30 ft·lbf)
14. **INSPECT SRS WARNING LIGHT (See page 05–424)**

SPIRAL CABLE SUB–ASSY

6007H–03

COMPONENTS

(See page 60–12)

6007I–04

REPLACEMENT

HINT:

COMPONENTS: See page 60–12

1. PRECAUTION (See page 60–1)

2. DISCONNECT BATTERY NEGATIVE TERMINAL (See page 60–1)

3. PLACE FRONT WHEELS FACING STRAIGHT AHEAD

(a) Check that the front wheels are facing straight ahead.

4. REMOVE HORN BUTTON ASSY (See page 60–13)

5. REMOVE STEERING WHEEL ASSY (See page 50–8)

SST 09950–50013 (09951–05010, 09952–05010, 09953–05020, 09954–05021)

6. REMOVE STEERING COLUMN COVER

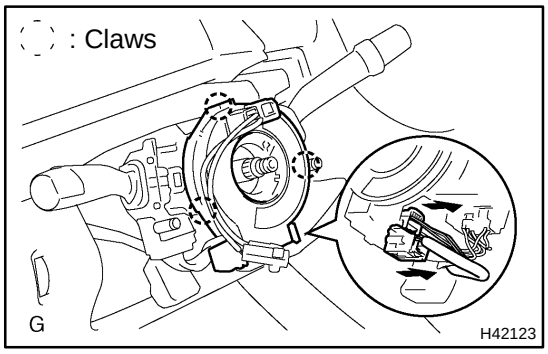

7. REMOVE SPIRAL CABLE SUB–ASSY

(a) Disconnect the airbag connector and the connector from the spiral cable sub–assy.

(b) Release the 3 claws and remove the spiral cable sub–assy.

8. INSPECT SPIRAL CABLE SUB–ASSY (See page 60–8)

(a) If the following condition is identified, replace the spiral cable sub–assy with a new one.

Condition:

Scratches or cracks on the connector

Cracks, dents or chipping of the spiral cable sub–assy

9. PLACE FRONT WHEELS FACING STRAIGHT AHEAD

(a) Check that the front wheels are facing straight ahead.

10. INSTALL SPIRAL CABLE SUB–ASSY

(a) Set the turn signal switch in neutral position.

NOTICE:

Make sure of the neutral position since the pin of the turn signal switch may be snapped.

(b) Engage the 3 claws and install the spiral cable sub–assy.

NOTICE:

When replacing the spiral cable sub–assy with a new one, remove the lock pin before installing the handle.

(c) Connect the airbag connector and the connector connecting to the spiral cable sub–assy.

(d) Install the steering column cover with the 3 screws.

11. CENTER SPIRAL CABLE

(a) Check that the ignition switch is turned to OFF.

(b) Check that the battery negative terminal is disconnected.

NOTICE:

Do not start the operation for 90 seconds after removing the terminal.

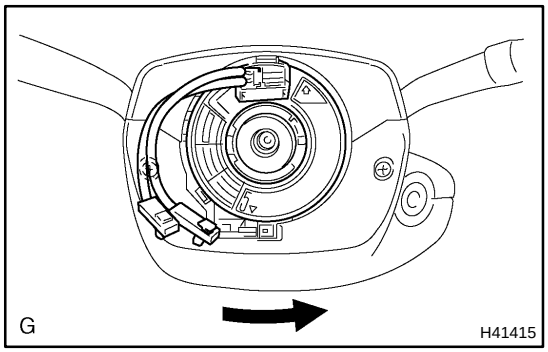

(c) Turn the cable counterclockwise by hand until it becomes harder to turn.

HINT:

The cable will rotate about 2.5 turns to either left or right of the center.

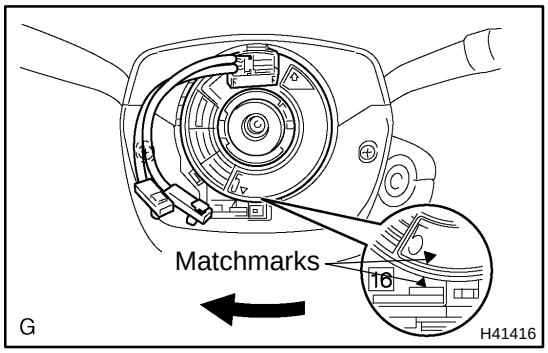

(d) Then rotate the cable clockwise about 2.5 turns to align the marks.

12. INSTALL STEERING WHEEL ASSY (See page 50–8)
Torque: 50 N·m (510 kgf·cm, 37 ft·lbf)

13. INSTALL HORN BUTTON ASSY (See page 60–13)
Torque: 8.8 N·m (90 kgf·cm, 78 in.·lbf)

14. INSPECT HORN BUTTON ASSY (See page 60–8)

15. INSPECT SRS WARNING LIGHT (See page 05–424)

61084–02

COMPONENTS

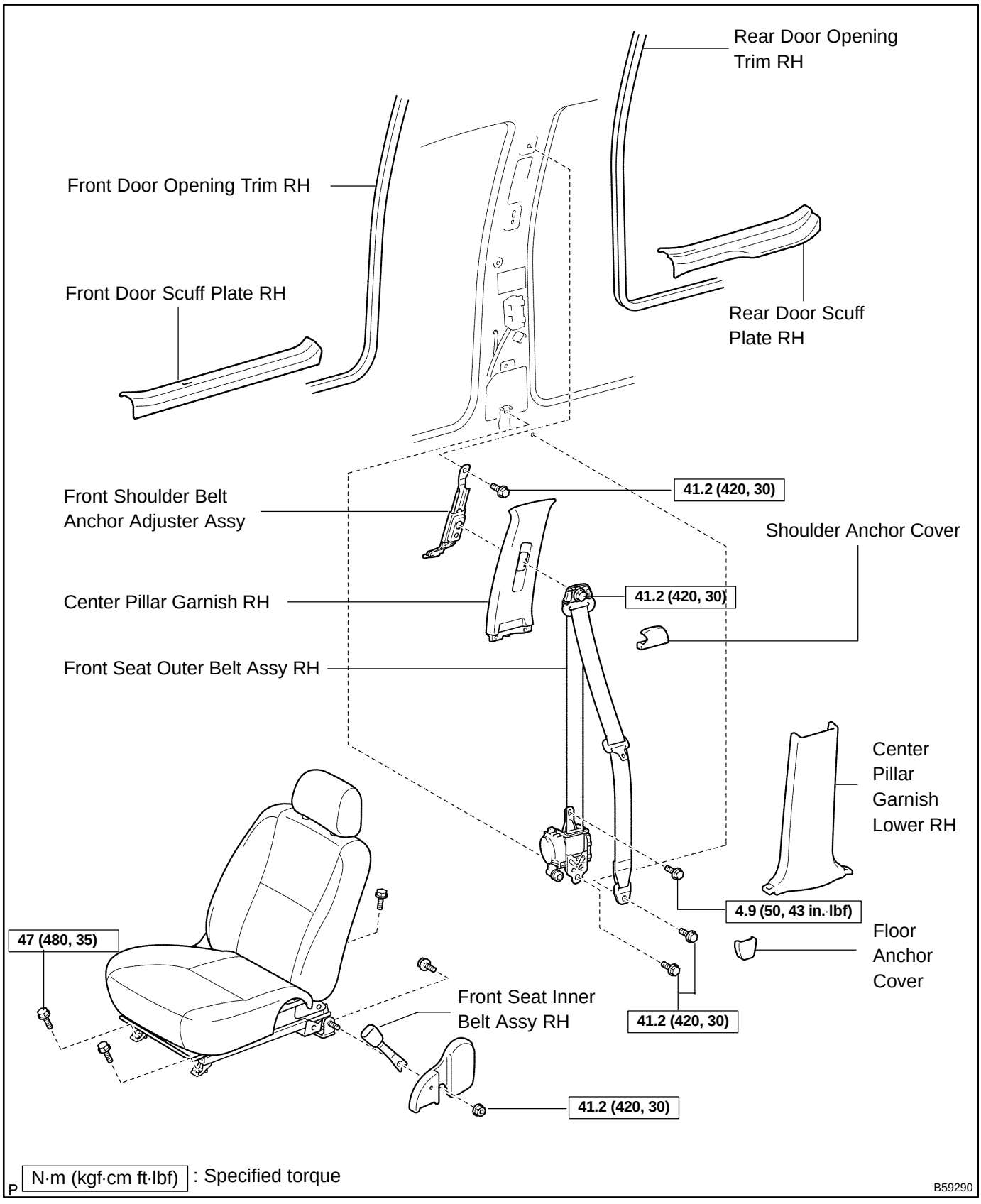

6108A–02

DISPOSAL

HINT:

When scrapping vehicles epuipped with a seat belt pretensioner or disposing of a front seat outer belt (with seat belt pretensioner) always first active the seat belt pretensioner in accordance with the procedure described below. If any abnormality occurs in the seat belt pretensioner operation, contact the SERVICE DEPT. of the TOYOTA MOTOR SALES, U.S.A., INC. When disposing of a front seat outer belt (with seat belt pretensioner) activated in a collision, follow the same procedure givenin step 1–(e) in ”DISPOSAL”.

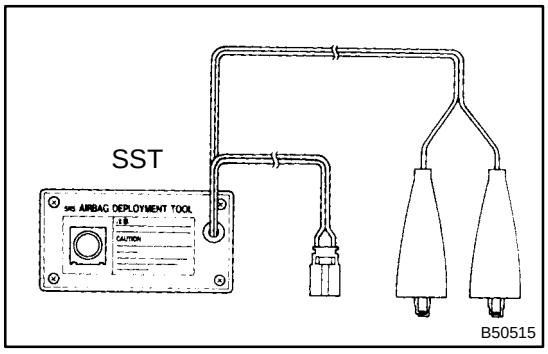

CAUTION:

- **Never dispose of front seat outer belt which has an inactivated pretensioner.**
- **The seat belt pretensioner produces a sizeable exploding sound when it activates, so perform the operation out–of–door and where it will not create a nuisance to nearby residents.**
- **When activating a front seat outer belt (with seat belt pretensioner), perform the operation at least 10 m (33 ft) away from the front seat outer belt.**
- **Use gloves and safety glasses when handling a front seat belt with activated pretensioner.**
- **Always wash your hands with water after completing the operation.**
- **Do not apply water, etc. to a front seat outer belt with activated pretensioner.**
- **When activating the seat belt pretensioner, always use the specified SST. (SRS Airbag Deployment Tool) Perform the operation in a place away from electrical noise.**

  SST 09082–00700

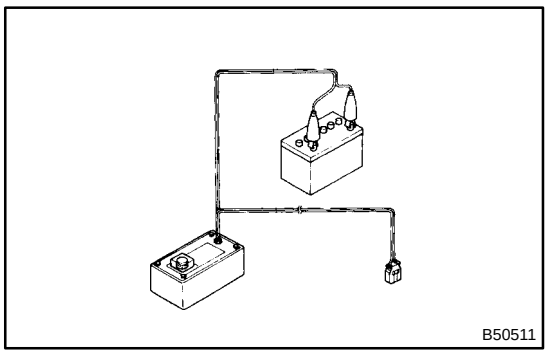

1. DISPOSE OF FRONT SEAT OUTER BELT ASSY RH (WHEN INSTALLED WITH VEHICLE)

HINT:

Check that the battery positive voltage is above 12 V.

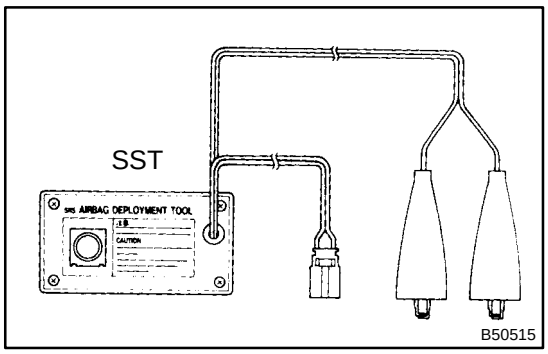

(a) Check the functioning of SST.

CAUTION:

When activating the seat belt pretensioner, always use a specified SST.

SST 09082–00700, 09082–00770

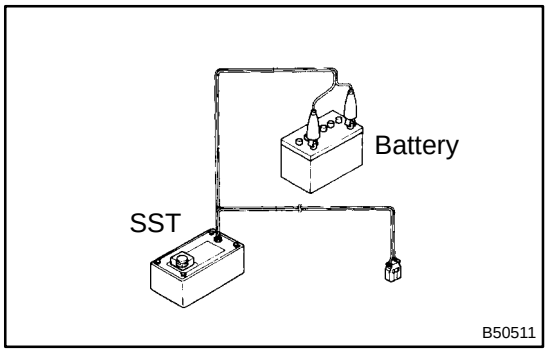

(1) Connect the SST to the battery.
Connect the red clip of the SST to the battery positive (+) terminal and the black clip to the battery negative (–) terminal.

HINT:

Do not connect the yellow connector which will be connected to the seat belt pretensioner.

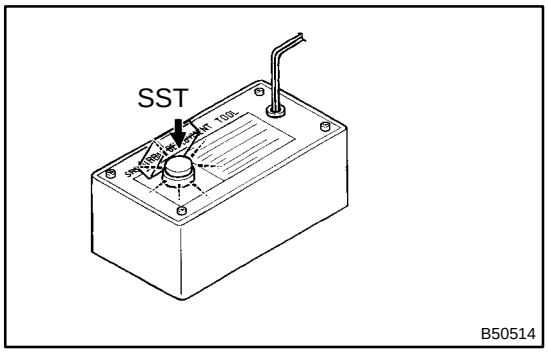

(2) Check the functioning of SST.
Press the SST activation switch, and check that the LED of the SST activation switch lights up.

CAUTION:

If the LED lights up when the activation switch is not pressed, the SST probably malfunctions, so definitely do not use the SST.

(b) Disconnect the SST from the battery.

(c) Disconnect the pretensioner connector.
(1) Disconnect the battery negative terminal.
(2) Check the SRS airbag system (See page 60–1).
(3) Remove the front door scuff plate RH (See page 76–21).
(4) Remove the rear door scuff plate RH (See page 76–21).
(5) Remove the front door opening trim RH.
(6) Remove the rear door opening trim RH.
(7) Remove center pillar garnish lower RH (See page 76–21).

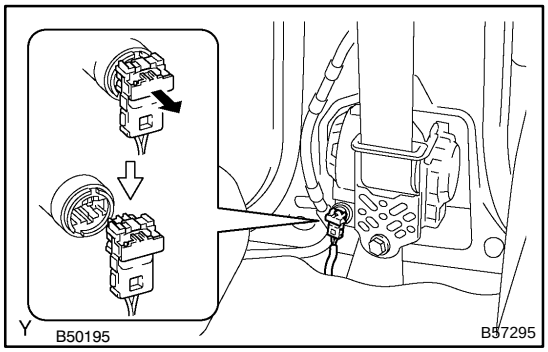

(8) Disconnect the pretensioner connector as shown in the illustration.

(d) Install the SST.
(1) Install the floor anchor of the seat belt.

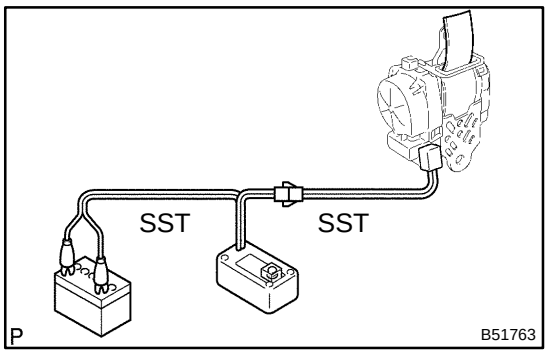

(2) Connect the 2 SSTs, then connect them to the seat belt pretensioner.

SST 09082–00700, 09082–00770

NOTICE:

To avoid damaging the SST connector and wire harness, do not lock the secondary lock of the twin lock.

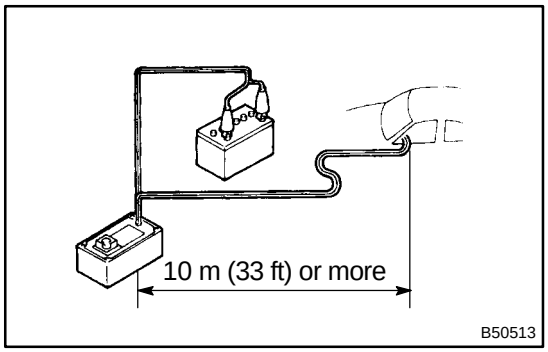

(3) Move the SST at least 10 m (33 ft) away from the front of the vehicle.

(4) Close all the doors and windows of the vehicle.

NOTICE:

Take care not to damage the SST wire harness.

(5) Connect the SST red clip to the battery positive (+) terminal and the black clip to the negative (–) terminal.

(e) Activate the seat belt pretensioner.

(1) Confirm that no one is inside the vehicle or within 10 m (33 ft) area around the vehicle.

(2) Press the SST activation switch and activate the seat belt pretensioner.

HINT:

The seat belt pretensioner operates simultaneously with the LED of the SST activation switch lighting up.

(f) Dispose of the front seat outer belt (with seat belt pretensioner).

CAUTION:

- **The rear outer belt is very hot when the seat belt pretensioner is activated, so leave it alone for at least 30 minutes after activation.**
- **Use gloves and safety glasses when handling a front seat outer belt with activated seat belt pretensioner.**
- **Always wash your hands with water after completing the operation.**
- **Do not apply water, etc. to a front seat outer belt with activated seat belt pretensioner.**

HINT:

When scrapping a vehicle, activate the seat belt pretensioner and scrap the vehicle with activated front seat outer belt being installed.

2. DISPOSE OF FRONT SEAT OUTER BELT ASSY RH (WHEN NOT INSTALLED WITH VEHICLE)

NOTICE:

- **When disposing of a front seat outer belt (with seat belt pretensioner) only, never use the customer's vehicle to activate the seat belt pretensioner.**
- **Be sure to follow the procedure given on the next page when activating the seat belt pretensioner.**

(a) Remove the front seat outer belt asembly (See page 61–7).

HINT:

Cut the belt near the seat belt retractor.

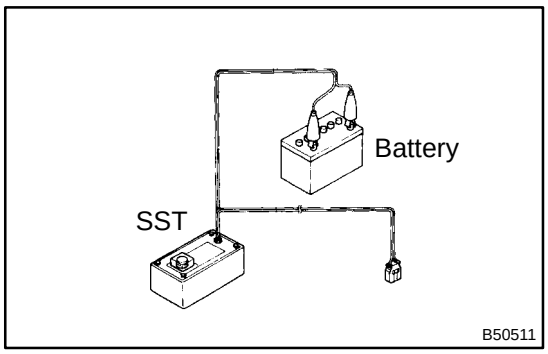

(b) Check the functioning of SST (See step 1–(a)).
SST 09082–00700, 09082–00770

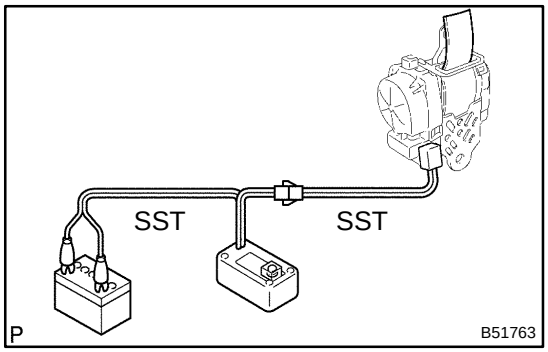

(c) Install the SST.
(1) Connect the 2 SSTs, then connect them to the seat belt pretensioner.
SST 09082–00700, 09082–00770

NOTICE:
To avoid damaging the SST connector and wire harness, do not lock the secondary lock of the twin lock.

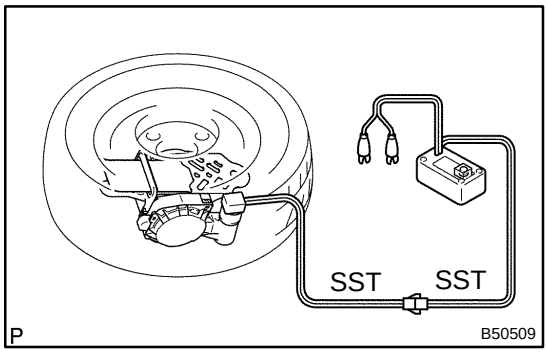

(2) Place the front seat outer belt on the ground and cover it with the disc wheel with tire.

NOTICE:
Place the front seat outer belt, as shown in the illustration.

(3) Move the SST at least 10 m (33 ft) away from the disc wheel.

NOTICE:
Take care not to damage the SST wire harness.

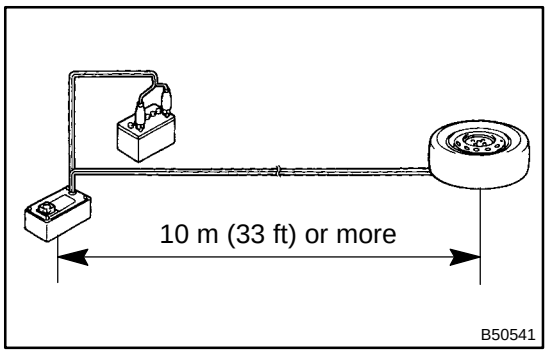

(d) Activate the seat belt pretensioner.
(1) Connect the SST red clip to the battery positive (+) terminal and black clip to the battery negative (–) terminal.
(2) Check that no one is within 10 m (33 ft) area around the disc wheel.
(3) Press the SST activation switch and activate the seat belt pretensioner.

HINT:
The seat belt pretensioner operates simultaneously with the LED of the SST activation switch lighting up.

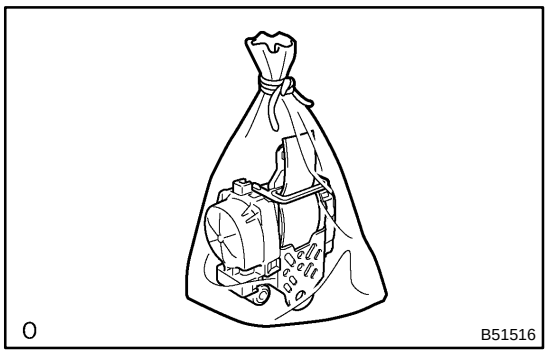

(e) Dispose of the front seat outer belt (with seat belt pretensioner).

CAUTION:

- **The rear outer belt is very hot when the seat belt pretensioner is activated, so leave it alone for at least 30 minutes after activation.**
- **Use gloves and safety glasses when handling a front seat outer belt with activated seat belt pretensioner.**
- **Always wash your hands with water after completing the operation.**
- **Do not apply water, etc. to a front seat outer belt with activated seat belt pretensioner.**

(1) Remove the disc wheel and SST.

(2) Place the front seat outer belt in a vinyl bag, tie the end tightly and dispose of it in the same way as other general parts.

FRONT SEAT BELT

610FO–01

PRECAUTION

CAUTION:

Replace the faulty parts of the seat belt systems (outer belt, inner belt, bolts, nuts, adjustable shoulder anchor, tether anchor hardware, sill–bar, etc.).

Seat belt systems not in use at the time of a collision should also be inspected and replaced if found to be damaged or working improperly.

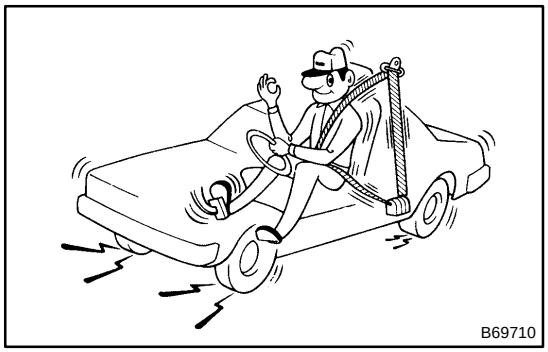

1. RUNNING TEST

(a) Fasten the front seat belts.

(b) Drive the vehicle at 16 km/h (10 mph) and slam on the brakes. Check that the belt locks and cannot be extended at this time.

HINT:

Conduct this test in a safe area. If the belt does not lock, remove the belt assembly and perform the inspections. Also whenever installing a new belt assembly, verify the proper operation before installation.

61085–02

REPLACEMENT

HINT:

- Installation is in the reverse order of the removal. But the installation is indicated only when it has a point.
- In the LH side, work in the same procedure as in the RH side.

1. DISCONNECT BATTERY NEGATIVE TERMINAL

2. REMOVE FRONT SEAT ASSEMBLY RH (See page 72–2)

3. REMOVE FRONT SEAT INNER BELT ASSY RH

(a) Remove the nut and front seat inner belt.

4. REMOVE FRONT DOOR SCUFF PLATE RH (See page 76–21)

5. REMOVE REAR DOOR SCUFF PLATE RH (See page 76–21)

6. REMOVE FRONT DOOR OPENING TRIM RH

7. REMOVE REAR DOOR OPENING TRIM RH

8. REMOVE CENTER PILLAR GARNISH LOWER RH (See page 76–21)

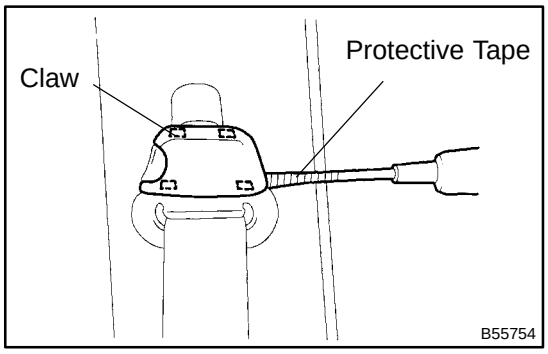

9. REMOVE FRONT SEAT OUTER BELT ASSY RH

(a) Remove the floor anchor cover.

(b) Remove the bolt and disconnect the front seat outer belt assembly RH (floor anchor side).

(c) Using a screwdriver, remove the seat belt anchor cover.

HINT:

Tape the screwdriver tip before use.

(d) Remove the bolt and front seat outer belt (shoulder anchor side).

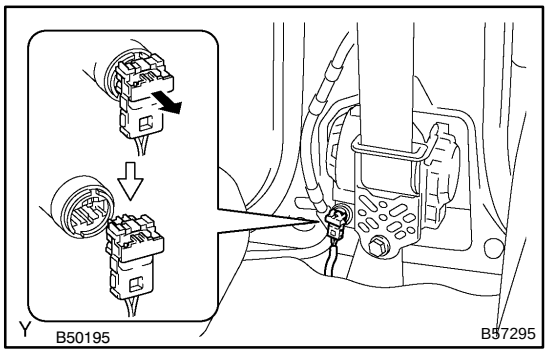

NOTICE:

- **Removal operation of the seat belt with pretensioner must be started in 90 seconds or more after the ignition switch is turned OFF and the battery negative terminal is disconnected.**
- **Carefully read the notices for the ”pretensioner” in the SRS airbag system and front seat outer belt assembly.**

(e) Disconnect the connector and remove the bolt.

10. REMOVE CENTER PILLAR GARNISH RH (See page 76–21)

11. REMOVE FRONT SHOULDER BELT ANCHOR ADJUSTER ASSY

(a) Remove the 2 bolts and front shoulder belt anchor adjuster assembly.

12. INSTALL FRONT SHOULDER BELT ANCHOR ADJUSTER ASSY

(a) Install the front shoulder belt anchor adjuster assembly with the bolt.

Torque: 41.2 N·m (420 kgf·cm, 30 ft·lbf)

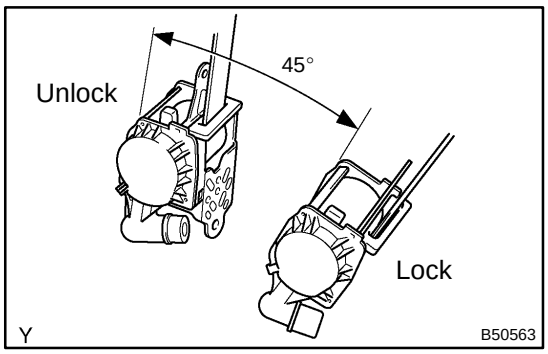

13. INSTALL FRONT SEAT OUTER BELT ASSY RH

NOTICE:

Do not disassemble the retractor.

(a) Check the degree of tilt when beginning to lock the ELR.

(1) Check that the belt will not lock within 15 degrees of tilt in all the direction but the belt will lock over 45 degrees of tilt when moving the installed retractor gently.

If the operation is not as specified, replace the front seat outer belt assembly.

(b) Install the retractor with the 2 bolts.

Torque:
4.9 N·m (50 kgf·cm, 43 in.·lbf) (Upper part of retractor)
41.2 N·m (420 kgf·cm, 30 ft·lbf) (Lower part of retractor)

(c) Install the shoulder anchor with the bolt.

Torque: 41.2 N·m (420 kgf·cm, 30 ft·lbf)

(d) Install the seat belt anchor cover.

(e) Install the floor anchor with the bolt.

Torque: 41.2 N·m (420 kgf·cm, 30 ft·lbf)

(f) Install the floor anchor cover.

(g) Check the ELR lock.

NOTICE:

Check should be performed with the assembly installed.

(1) Check that the belt will lock when pulling out the belt quickly with the belt installed.

If the operation is not as specified, replace the front seat outer belt assembly.

14. INSTALL FRONT SEAT INNER BELT ASSY RH

(a) Install the front seat inner belt assembly RH with the nut.

Torque: 41.2 N·m (420 kgf·cm, 30 ft·lbf)

61083–02

INSPECTION

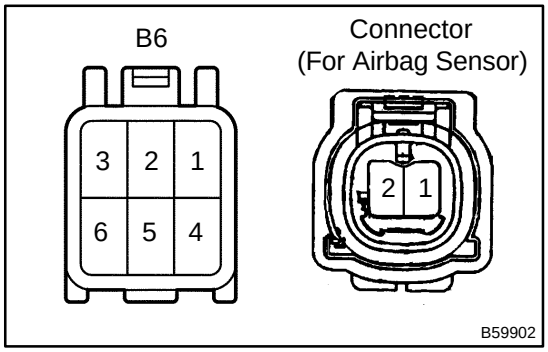

1. INSPECT FRONT SEAT INNER BELT ASSY LH

(a) When fastening the seat belt (buckle switch ON).

(1) Inspect the continuity and resistance between the terminals.

Standard:

Terminal No.	Specified condition
B6–1 ⇔ B6–2	1,330 Ω
B6–1 ⇔ B6–3	No continuity
B6–4 ⇔ 2	Continuity
B6–5 ⇔ 1	Continuity

If the result is not as specified, replace the inner belt.

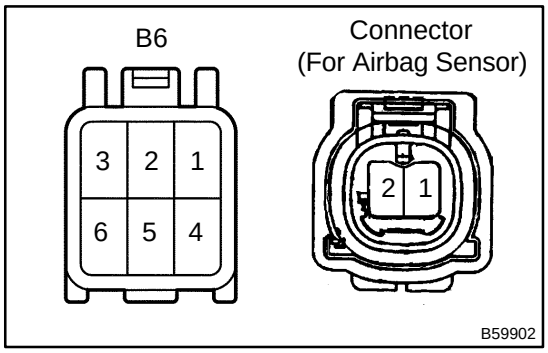

(b) When releasing the seat belt (buckle switch OFF).

(1) Inspect the continuity and resistance between the terminals.

Standard:

Terminal No.	Specified condition
B6–1 ⇔ B6–2	330 Ω
B6–1 ⇔ B6–3	Continuity
B6–4 ⇔ 2	Continuity
B6–5 ⇔ 1	Continuity

If the result is not as specified, replace the inner belt.

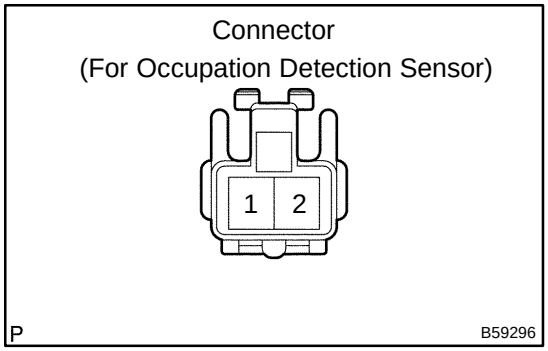

2. INSPECT FRONT SEAT INNER BELT ASSY RH

(a) Short between connector terminals 1 and 2 for the occupation detection sensor (seat is occupied).

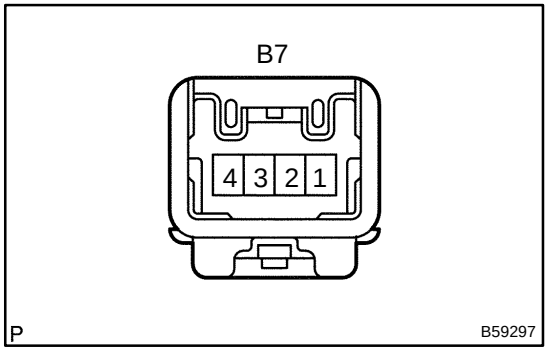

(b) When fastening the seat belt (buckle switch is ON and seat is occupied).

(1) Inspect the continuity between the terminals of the connector for the warning switch.

Standard:

Terminal No.	Specified condition
B7–3 ⇔ B7–4	Continuity
B7–1 ⇔ B7–4	No continuity

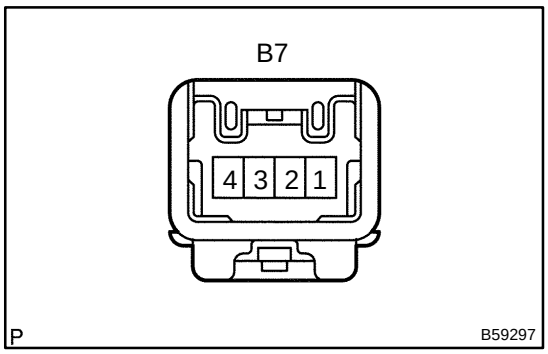

(c) When releasing the seat belt (buckle switch is OFF and seat is occupied).

(1) Inspect the continuity between the terminals of the connector for the warning switch.

Standard:

Terminal No.	Specified condition
B7–3 ⇔ B7–4	Continuity
B7–1 ⇔ B7–2	Continuity

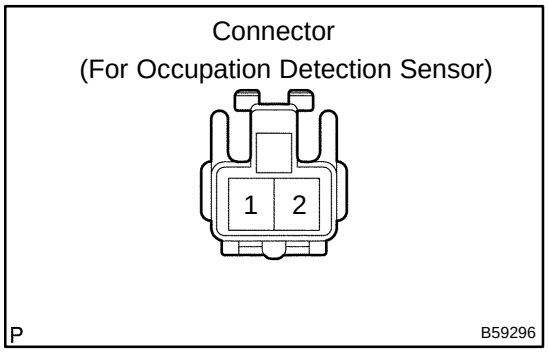

(d) Disconnect the occupation detection sensor connector (seat is not occupied).

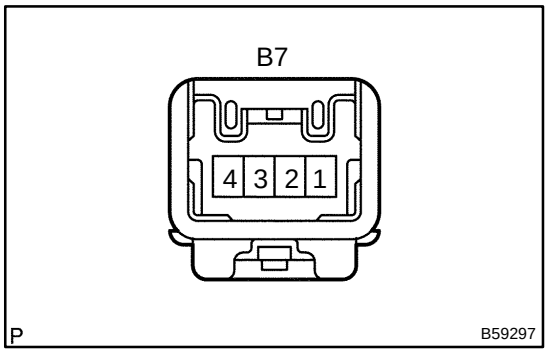

(e) When fastening the seat belt (buckle switch is not ON and seat is occupied).

(1) Inspect the continuity between the terminals of the connector for the warning switch.

Standard:

Terminal No.	Specified condition
B7–3 ⇔ B7–4	No continuity
B7–1 ⇔ B7–2	No continuity

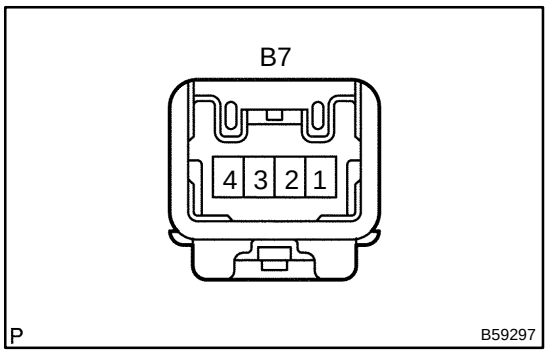

(f) When releasing the seat belt (buckle switch is not OFF and seat is occupied).

(1) Inspect the continuity between the terminals of the connector for the warning switch.

Standard:

Terminal No.	Specified condition
B7–3 ⇔ B7–4	No continuity
B7–1 ⇔ B7–2	Continuity

If the result is not as specified, replace the inner belt.

SEAT BELT WARNING SYSTEM

61081–02

LOCATION

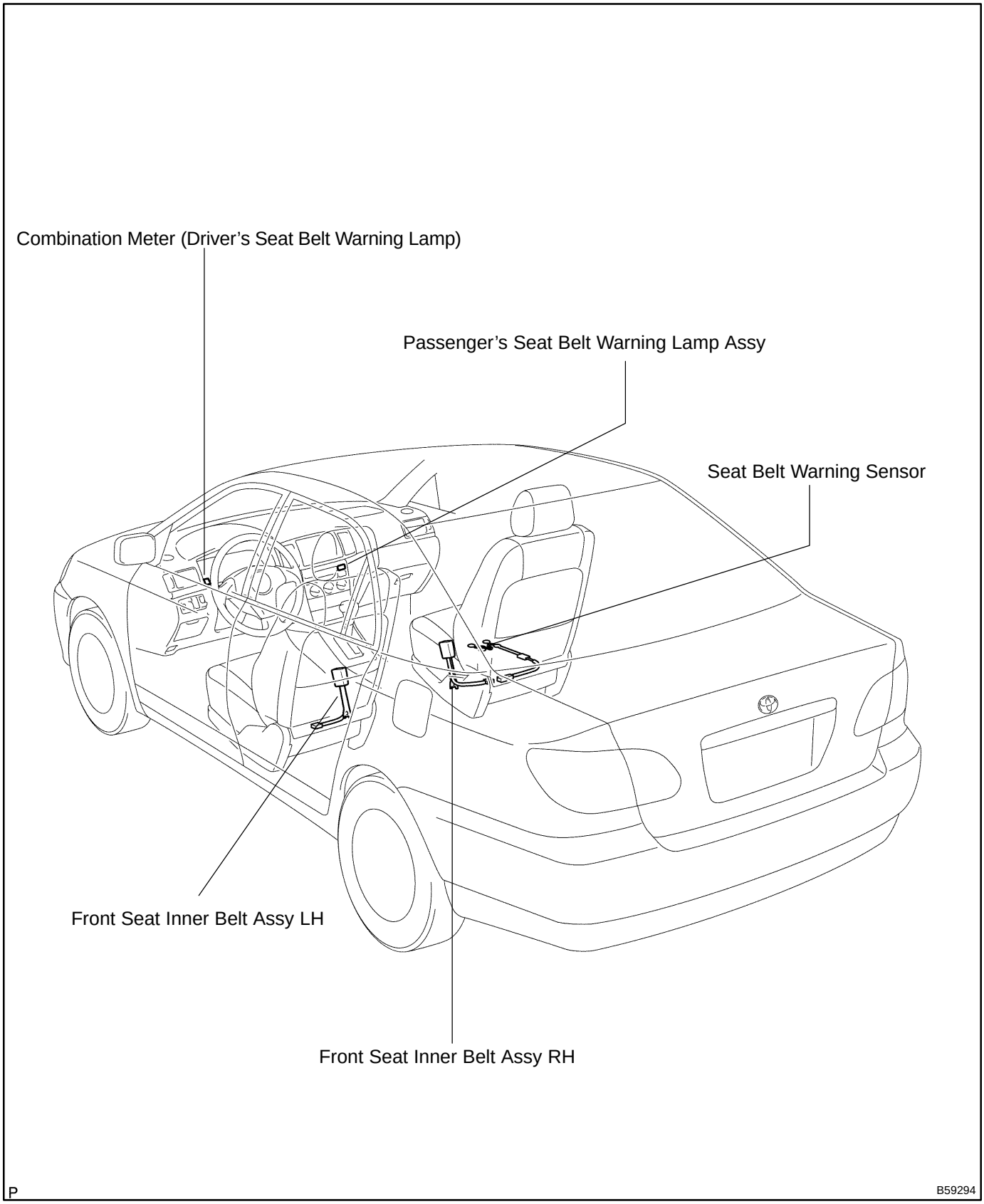

REAR SEAT BELT

COMPONENTS

61086–02

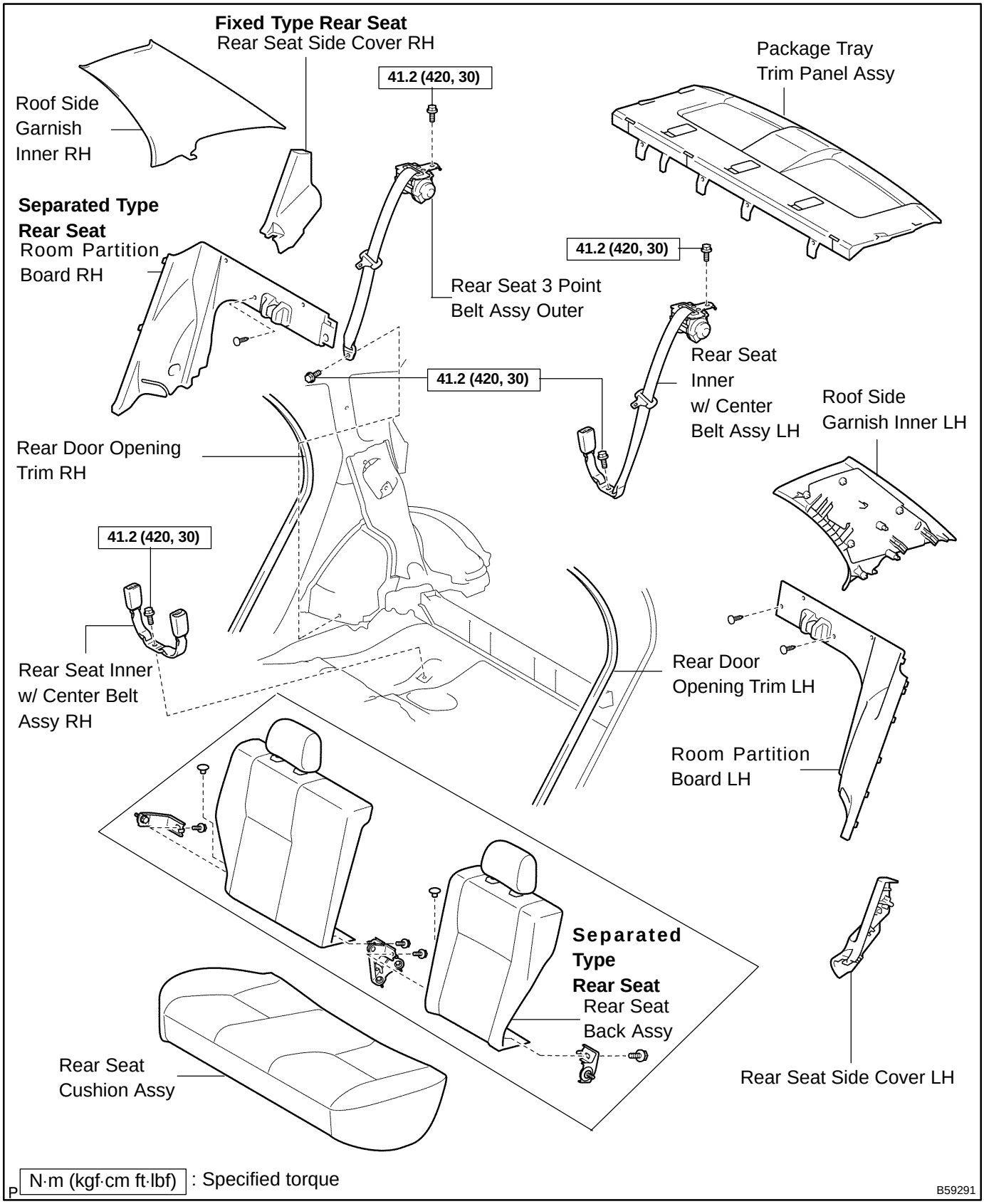

61087–02

REPLACEMENT

HINT:

Installation is in the reverse order of the removal. But the installation is indicated only when it has a point.

1. **REMOVE REAR DOOR OPENING TRIM RH**
2. **REMOVE REAR DOOR OPENING TRIM LH**
3. **REMOVE REAR SEAT CUSHION ASSEMBLY (See page 72–6 or 72–8)**
4. **REMOVE REAR SEAT BACK ASSY (FIXED TYPE REAR SEAT) (See page 72–8)**
5. **REMOVE REAR SEAT BACK ASSY (SEPARATED TYPE REAR SEAT) (See page 72–6)**
6. **REMOVE REAR SEAT SIDE COVER RH (FIXED TYPE REAR SEAT) (See page 76–21)**
7. **REMOVE REAR SEAT SIDE GARNISH LH (FIXED TYPE REAR SEAT) (See page 76–21)**
8. **REMOVE ROOM PARTITION BOARD LH (SEPARATED TYPE REAR SEAT) (See page 76–21)**
9. **REMOVE ROOM PARTITION BOARD RH (SEPARATED TYPE REAR SEAT) (See page 76–21)**
10. **REMOVE ROOF SIDE GARNISH INNER RH (See page 76–21)**
11. **REMOVE ROOF SIDE GARNISH INNER LH (See page 76–21)**

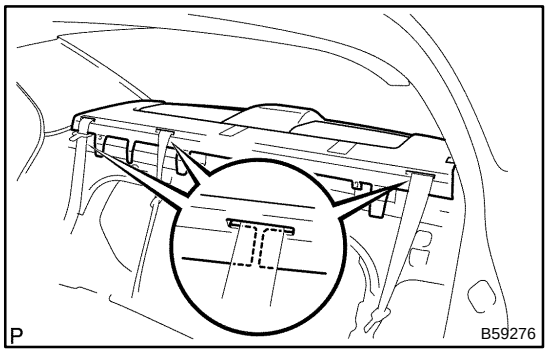

12. **REMOVE PACKAGE TRAY TRIM PANEL ASSY**

(a) Pull out the belt from the slit, and then remove the package tray trim panel assembly.

13. **REMOVE REAR SEAT 3 POINT TYPE BELT ASSY OUTER**

(a) Remove the bolt and disconnect the rear seat 3 point type belt assembly outer (floor anchor).

(b) Remove the bolt and rear seat 3 point type belt assembly outer.

14. **REMOVE REAR SEAT INNER W/CENTER BELT ASSY RH**

(a) Remove the 2 bolts and rear seat inner w/ center belt assembly RH.

15. **REMOVE REAR SEAT INNER W/CENTER BELT ASSY LH**

(a) Remove the bolt and rear seat inner w/ center belt assembly LH.

16. **REMOVE CHILD RESTRAINT SEAT ANCHOR BRACKET SUB–ASSY RH**

(a) Remove the 2 bolts and child restraint seat anchor bracket RH.

17. **INSTALL CHILD RESTRAINT SEAT ANCHOR BRACKET SUB–ASSY RH**

(a) Install the child restraint seat anchor bracket RH with the 2 bolts.

Torque: 18.1 N·m (185 kgf·cm, 13.3 ft·lbf)

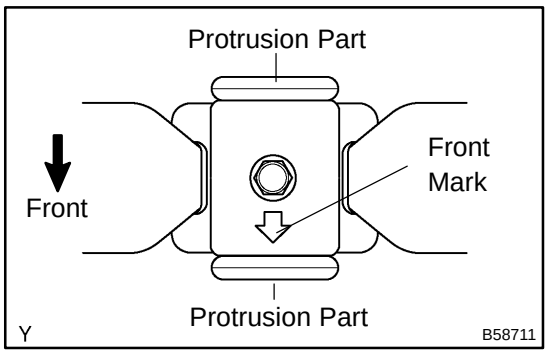

18. INSTALL REAR SEAT INNER W/CENTER BELT ASSY LH

(a) Install the rear seat inner w/ center belt assembly RH with the bolt, as shown in the illustration.

Torque: 41.2 N·m (420 kgf·cm, 30 ft·lbf)

NOTICE:

- **Do not make the anchor part run onto the protrusion part of the floor panel.**
- **Do not disassemble the retractor.**

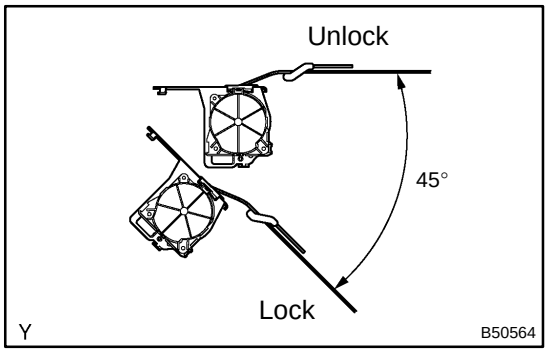

(b) Check the degree of tilt when the belt begins to lock the ELR.

(1) Check that the belt will not lock within 15 degrees of tilt in all the direction but the belt will lock over 45 degrees of tilt when moving the installed retractor gently.

If the operation is not as specified, replace the rear seat belt assembly outer center.

(c) Install the rear seat belt assembly outer center with the bolt.

Torque: 41.2 N·m (420 kgf·cm, 30 ft·lbf)

(d) Check the ELR lock.

NOTICE:

Check should be performed with the assembly installed.

(1) Check that the belt will lock when pulling out the belt quickly with the belt installed.

If the operation is not as specified, replace the rear seat belt assembly outer center.

(e) Check the fastening function of the child restraint system.

NOTICE:

Check should be performed with the assembly installed.

(1) Check that the belt cannot be pulled out any more but can be rewound after the belt is fully pulled out.

(2) Check that the belt can be pulled out and rewound after the belt is fully rewound.

If the operation is not as specified, replace the rear seat belt assembly outer center.

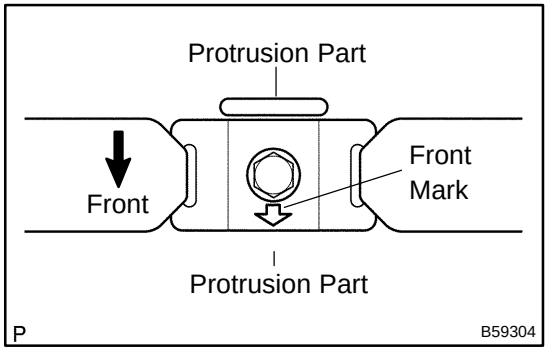

19. INSTALL REAR SEAT INNER W/CENTER BELT ASSY RH

(a) Install the rear seat inner w/ center belt assembly RH with the bolt, as shown in the illustration.

Torque: 41.2 N·m (420 kgf·cm, 30 ft·lbf)

NOTICE:

Do not make the anchor part run onto the protrusion part of the floor panel.

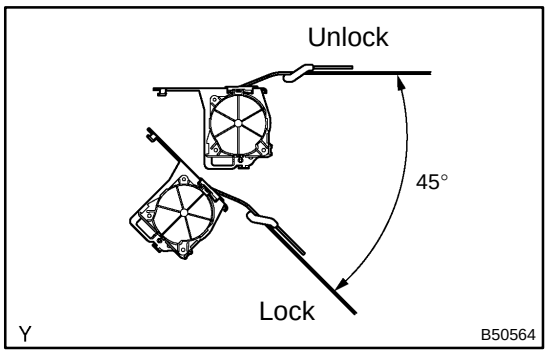

20. INSTALL REAR SEAT 3 POINT TYPE BELT ASSY OUTER

NOTICE:

Do not disassemble the retractor.

(a) Check the degree of tilt when the belt begins to lock the ELR.

(1) Check that the belt will not lock within 15 degrees of tilt in all the direction but the belt will lock over 45 degrees of tilt when moving the installed retractor gently.

If the operation is not as specified, replace the rear seat belt assembly outer.

(b) Install the rear seat belt assembly outer (retractor side) with the bolt.

Torque: 41.2 N·m (420 kgf·cm, 30 ft·lbf)

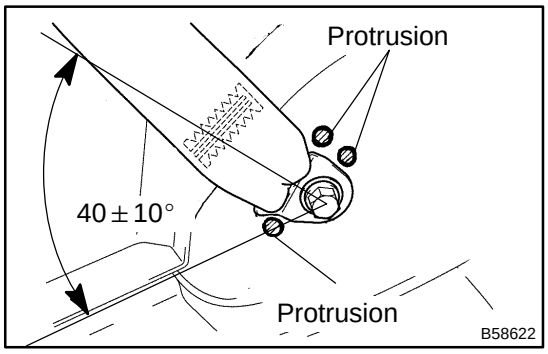

(c) Install the rear seat belt assembly outer (floor anchor side) with the bolt.

Torque: 41.2 N·m (420 kgf·cm, 30 ft·lbf)

NOTICE:

Do not make the anchor part run onto the protrusion part of the floor panel.

(d) Check the ELR lock.

NOTICE:

Check should be performed with the assembly installed.

(1) Check that the belt will lock when pulling out the belt quickly with the belt installed.

If the operation is not as specified, replace the rear seat belt assembly outer.

(e) Check the fastening function of the child restraint system.

NOTICE:

Check should be performed with the assembly installed.

(1) Check that the belt cannot be pulled out any more but can be rewound after the belt is fully pulled out.

(2) Check that the belt can be pulled out and rewound after the belt is fully rewound.

If the operation is not as specified, replace the rear seat belt assembly outer.

21. INSTALL ROOM PARTITION BOARD RH (SEPARATED TYPE REAR SEAT)

22. INSTALL ROOM PARTITION BOARD LH (SEPARATED TYPE REAR SEAT)

23. INSTALL REAR SEAT SIDE GARNISH LH (FIXED TYPE REAR SEAT)

24. INSTALL REAR SEAT SIDE COVER RH (FIXED TYPE REAR SEAT)

25. INSTALL REAR SEAT BACK ASSY (FIXED TYPE REAR SEAT) (See page 72–8)

26. INSTALL REAR SEAT BACK ASSY (SEPARATED TYPE REAR SEAT) (See page 72–6)

61082–02

PROBLEM SYMPTOMS TABLE

Symptom	Suspected Area	See page
Driver's seat belt warning lamp does not light up	1. GAUGE fuse 2. Combination meter 3. Airbag sensor assembly center 4. Front seat inner belt assembly LH 5. Wire harness	 71–17 60–38 61–3
Passenger's seat belt warning lamp does not light up	1. GAUGE fuse 2. Passenger's seat belt warning lamp 3. Front seat inner belt assembly RH 4. Wire harness	 61–3 61–3

650GT–01

ADJUSTMENT

1. HEADLIGHT AIM ONLY

(a) Place the vehicle in the following conditions.
- The area around the headlight is not deformed.
- The vehicle is parked on a level surface.
- Tire inflation pressure is in the specified value (See page 28–1).
- A driver is in the driver's seat and the vehicle is in a state ready for driving (with a tank full).
- The vehicle has been bounced several times.

(b) Check the headlight aiming.
(1) Prepare a thick white paper.
(2) Stand the paper perpendicular to the ground at the position 9.84 ft away from the headlights.
(3) Ensure that the center line of the vehicle and the paper face forms a 90–degree angle as shown in the illustration.
(4) Draw a horizontal line (H line) on the paper, showing where the headlights should strike.
(5) Draw a vertical line (V line) to where the center line of the vehicle is to be.
(6) Draw 2 vertical lines to where the both headlights should strike (V RH and V LH lines).
(7) Draw a horizontal line (by connecting the both low beam center marks) to where the headlights should strike (H RH and H LH lines).
(8) Take appropriate measures to prevent any influence of other lights.
(9) Set the headlights leveling position to "0" position and adjust the angle of the headlight axis.

HINT:
The H RH and H LH line is 0.4° below the horizontal line (H line) of the light axis.

(10) Start the engine.
(11) Turn the headlights ON.
(12) Check that the headlights properly strike the position shown in the illustration.
(13) If not, adjust the lights in the vertical direction.

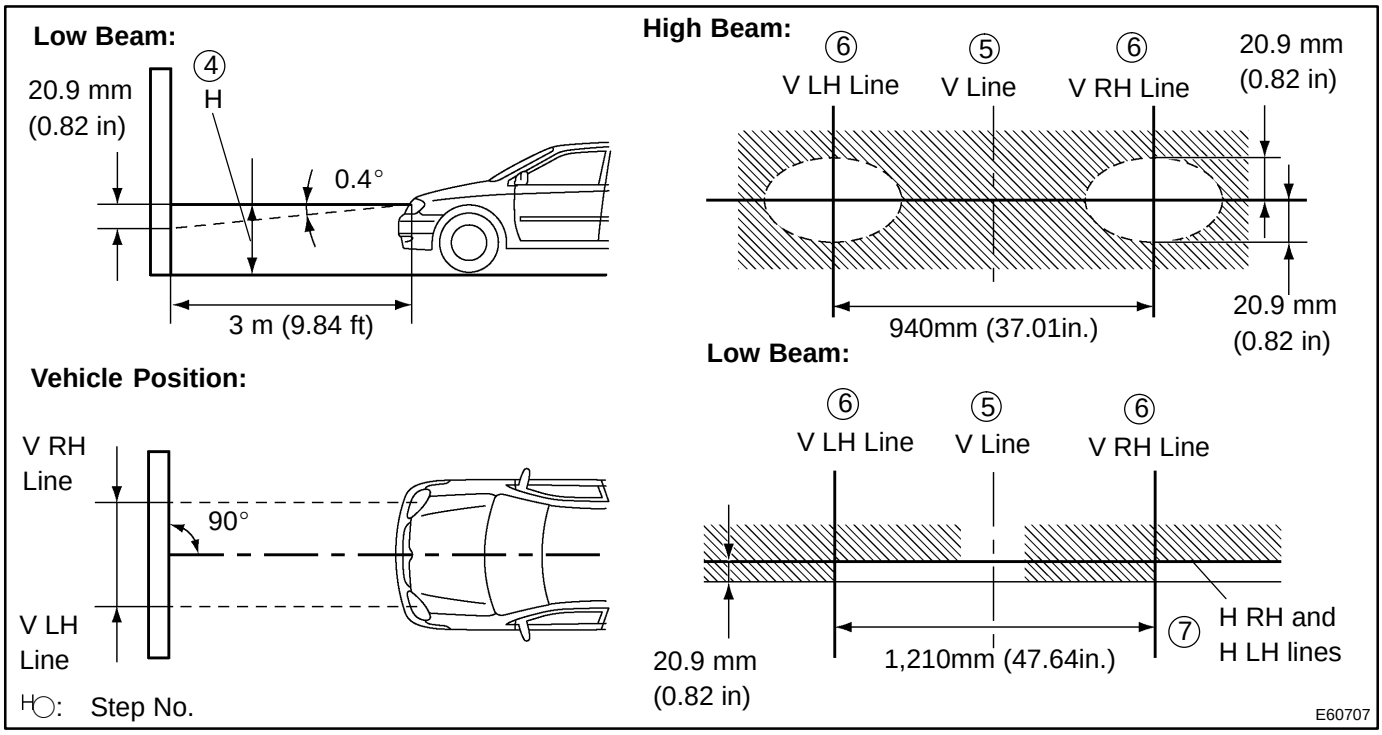

HINT:

- As shown in the illustration, adjust each aim of the RH and LH lights.

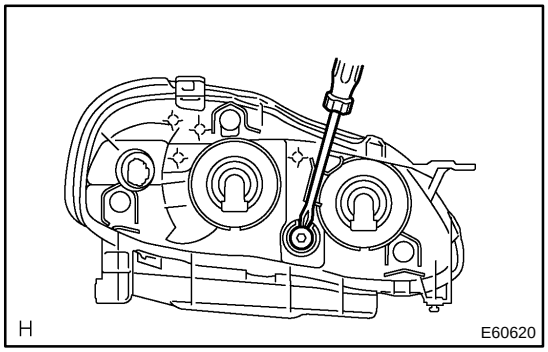

(c) When adjusting the headlight aim in the veatical direction: Using adjusting bolt, adjust the headlight aim to be within the specified range.

HINT:

The optical aim moves upward when turning a screwdriver clockwise, while it moves downward when turning a screwdriver counterclockwise.

BACK UP LAMP ASSY LH

650GY–01

REPLACEMENT

1. REMOVE BACK UP LAMP ASSY LH

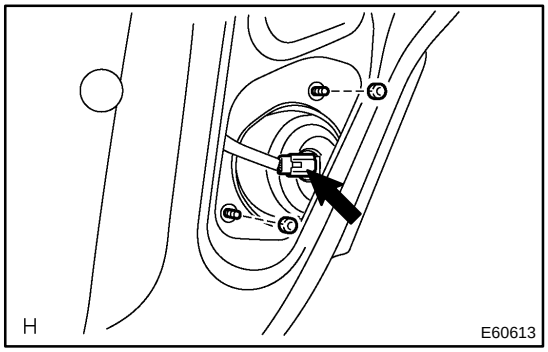

(a) Remove the service hole cover.
(b) Remove the 2 nuts and disconnect the connector.

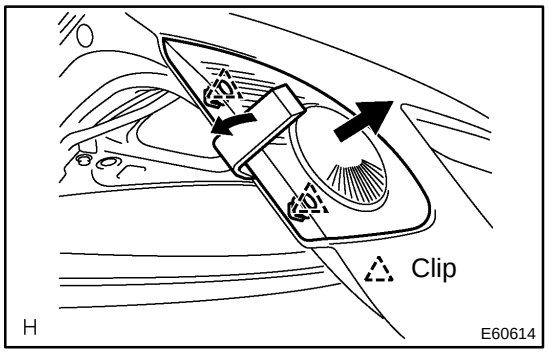

(c) Using a mouldingremover, remove the 2 clips and back up light assy LH.

2. INSTALL BACK UP LAMP ASSY LH

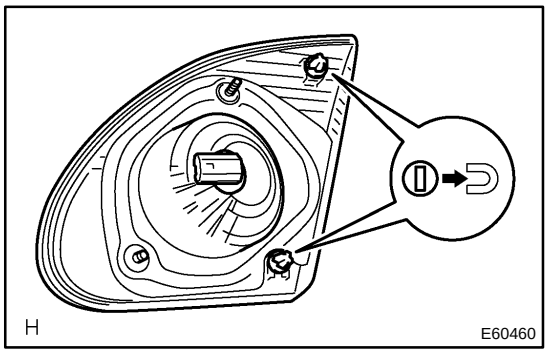

(a) Set the 2 clips on the back up light assy LH as shown in the illustration.
(b) Connect the connector.
(c) Install the back up light LH with 2 nuts.

CENTER STOP LAMP ASSY

650GZ–01

REPLACEMENT

1. REMOVE PACKAGE TRAY TRIM PANEL ASSY (W/O REAR SPOILER)(See Page 61–15)

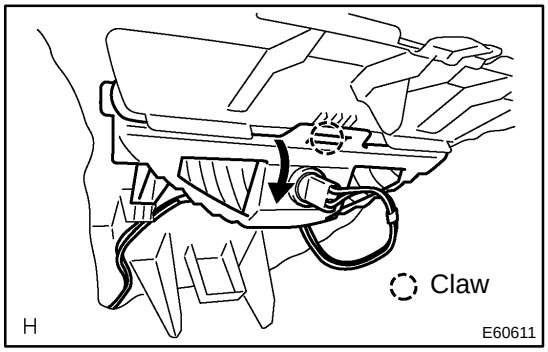

2. REMOVE CENTER STOP LAMP ASSY (W/O REAR SPOILER)

(a) Remove the center stop light assy as shown in the illustlation.

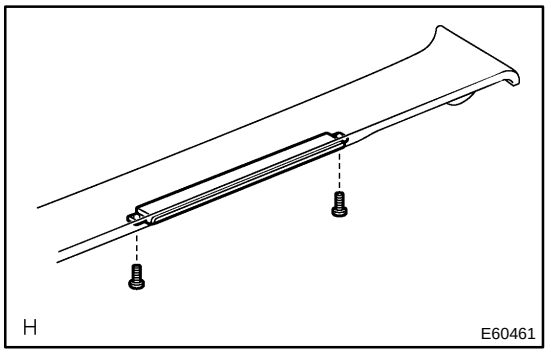

3. REMOVE CENTER STOP LAMP ASSY (W/ REAR SPOILER)

(a) Remove the 2 screws.

(b) Disconnect the connector and remove the center stop light assy.

LH HEADLAMP ASSY

COMPONENTS

650GR–01

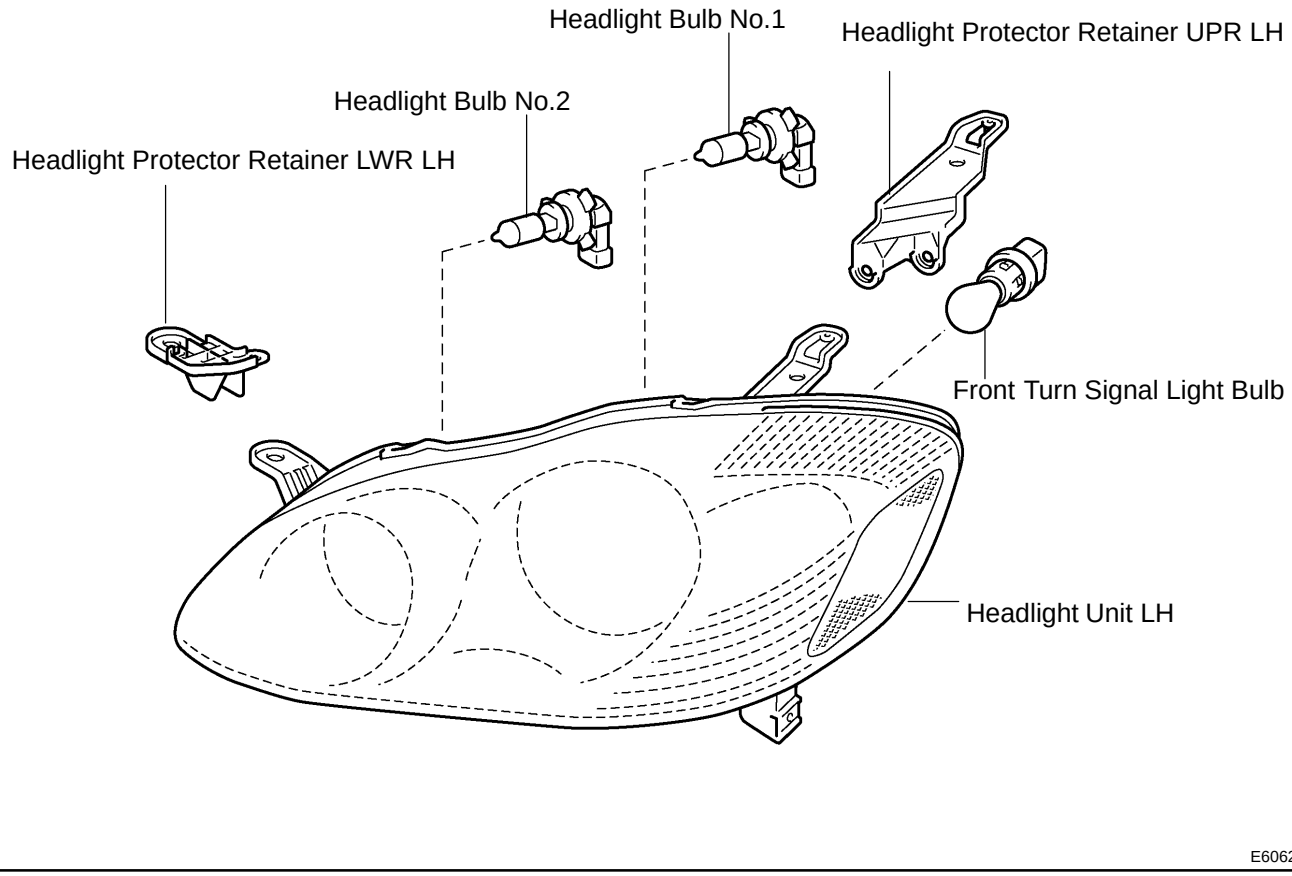

650GV–01

ADJUSTMENT

1. PUT VEHICLE THESE CONDITIONS

(a) Tire inflation pressure is the specified value (See page 28–1).

(b) Start the engine.

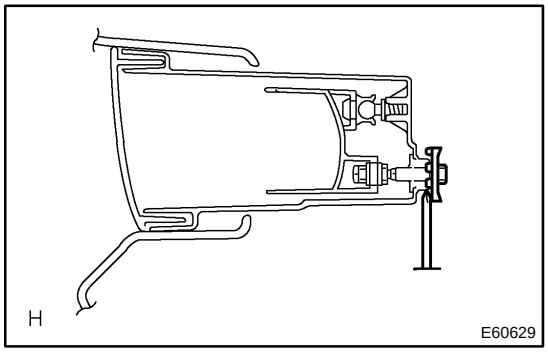

2. ADJUST FOG LIGHT AIM

(a) The fog light aim can be adjusting by moving the aiming screw in the vertical direction.

HINT:

The optical aim moves upward when turning a screwdriver clockwise, while it moves downward when turning a screwdriver counterclockwise.

3. CHECK FOG LIGHT AIM

FOG LAMP ASSY LH

650GU–01

REPLACEMENT

1. REMOVE RADIATOR GRILLE SUB–ASSY(See page 76–2)
2. REMOVE FRONT BUMPER COVER(See page 76–2)

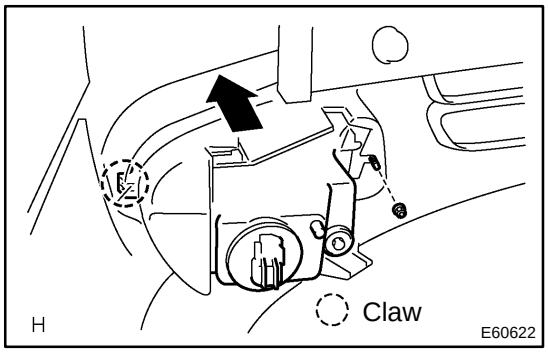

3. REMOVE FOG LAMP ASSY LH
(a) Remove a nut and release a claw.
(b) Remove the fog light assy LH.

4. PUT VEHICLE THESE CONDITIONS(See page 65–18)
5. ADJUST FOG LIGHT AIM(See page 65–18)
6. CHECK FOG LIGHT AIM(See page 65–18)

HEADLAMP DIMMER SWITCH ASSY

650H0–01

REPLACEMENT

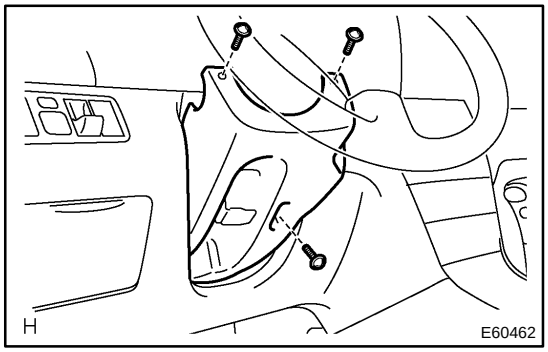

1. REMOVE STEERING COLUMN COVER LWR

(a) Remove 3 screws and steering column cover LWR.

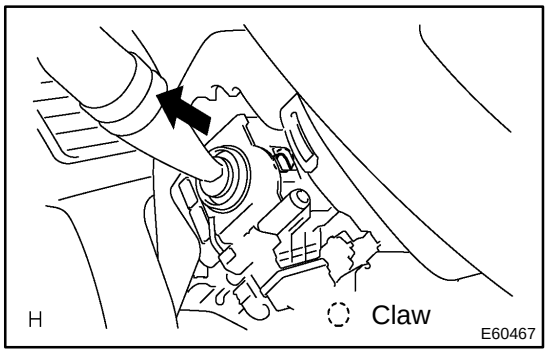

2. REMOVE HEADLAMP DIMMER SWITCH ASSY

(a) Disconnect the connector.

(b) Release the claw and pull out the head light dimmer switch assy.

INSPECTION

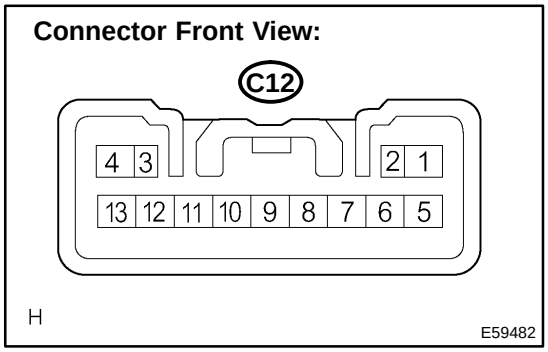

1. HEADLAMP DIMMER SWITCH ASSY

(a) Inspect light control switch continuity.

(1) Measure the resistance according to the value(s) in the table below.

Standard:

Tester connection	Switch operation	Specified resistance
10 – 11 11 – 12 10 – 13	OFF	10 kΩ or higher
10 – 13	TAIL	Below 1 Ω
10 – 13 11 – 12	HEAD	Below 1 Ω

(b) Inspect headlight dimmer switch continuity.

(1) Measure the resistance according to the value(s) in the table below.

Standard:

Tester connection	Switch operation	Specified resistance
8 – 11 9 – 11	FLASH	Below 1 Ω
8 – 11	LOW BEAM	Below 1 Ω
9 – 11	HI BEAM	Below 1 Ω

HINT:

Turn light control switch to the HEAD position when checking ”LOW BEAM” and ”HI BEAM”.

(c) Inspect turn signal switch continuity.

(1) Measure the resistance according to the value(s) in the table below.

Standard:

Tester connection	Switch operation	Specified resistance
6 – 7	Right turn	Below 1 Ω
5 – 6 6 – 7	Neutral	10 kΩ or higher
6 – 5	Left turn	Below 1 Ω

(d) w/ Fog light:

Inspect front fog light switch continuity.

(1) Measure the resistance according to the value(s) in the table below.

Standard:

Tester connection	Switch operation	Specified resistance
2 – 4	OFF	10 kΩ or higher
2 – 4	ON	Below 1 Ω

2. BACK UP LAMP SWITCH ASSY

(a) Measure the resistance according to the value(s) in the table below.

Standard:

Switch operation	Specified resistance
Ball is not pressed	10 kΩ or higher
Ball is pressed	Below 1 Ω

3. STOP LAMP SWITCH ASSY (W/O CRUISE CONTROL)

(a) Measure the resistance according to the value(s) in the table below.

Standard:

Switch operation	Specified resistance
Switch pin free	10 kΩ or higher
Switch pin pushed in	Below 1 Ω

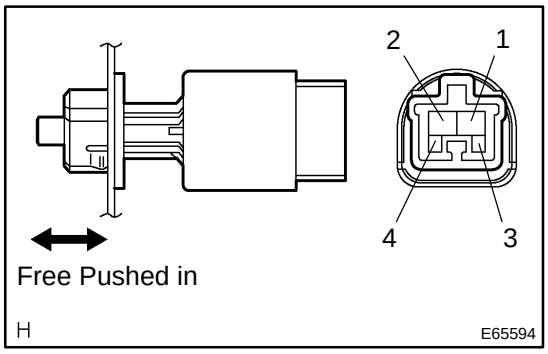

4. STOP LAMP SWITCH ASSY (W/ CRUISE CONTROL)

(a) Measure the resistance according to the value(s) in the table below.

Standard:

Tester connection	Switch operation	Specified resistance
1 – 2	Switch pin free	10 kΩ or higher
3 – 4	Switch pin free	Below 1 Ω
1 – 2	Switch pin pushed in	Below 1 Ω
3 – 4	Switch pin pushed in	10 kΩ or higher

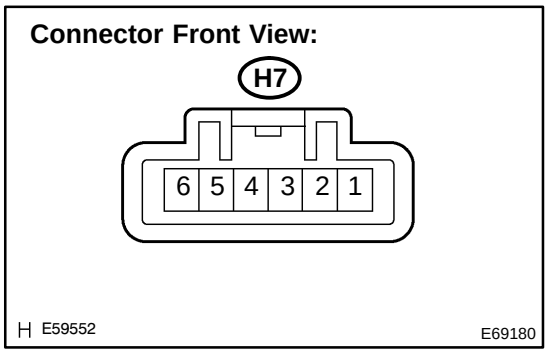

5. HAZARD WARNING SIGNAL SWITCH ASSY

(a) Measure the resistance according to the value(s) in the table below.

Standard:

Tester connection	Switch operation	Specified resistance
2 – 3	ON	Below 1 Ω
2 – 3	OFF	10 kΩ or higher

(b) Inspect illumination operation.

(1) Connect the positive (+) lead from the battery to terminal 5 and the negative (–) lead to terminal 4, then check that the illumination comes on.

6. FRONT DOOR COURTESY LAMP SWITCH ASSY

(a) Measure the resistance according to the value(s) in the table below.

Standard:

Switch operation	Specified resistance
Shaft is pressed	10 kΩ or higher
Shaft is not pressed	Below 1 Ω

7. REAR DOOR COURTESY LAMP SWITCH ASSY

(a) Measure the resistance according to the value(s) in the table below.

Standard:

Switch operation	Specified resistance
Shaft is pressed	10 kΩ or higher
Shaft is not pressed	Below 1 Ω

8. LUGGAGE COMPARTMENT ROOM COURTESY LAMP SWITCH ASSY

(a) Measure the resistance according to the value(s) in the table below.

Standard:

Switch operation	Specified resistance
Shaft is pressed	10 kΩ or higher
Shaft is not pressed	Below 1 Ω

Connector Front View:

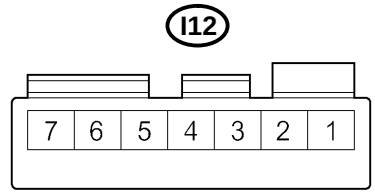

H

E69181

9. MAP LAMP ASSY (W/O SLIDING ROOF)

(a) Measure the resistance according to the value(s) in the table below.

Standard:

Tester connection	Switch operation	Specified resistance
1 – 6	OFF	10 kΩ or higher

(b) Connect the positive (+) lead from the battery to terminal 1 and the negative (–) lead to terminal 6, then check that the illumination comes on when switch operation is ON position.

Connector Front View:

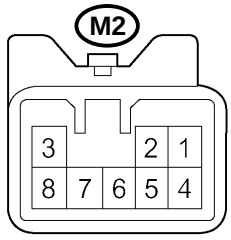

H

E50229

10. MAP LAMP ASSY (W/ SLIDING ROOF)

(a) Measure the resistance according to the value(s) in the table below.

Standard:

Tester connection	Switch operation	Specified resistance
1 – 3	OFF	10 kΩ or higher

(b) Connect the positive (+) lead from the battery to terminal 1 and the negative (–) lead to terminal 3, then check that the illumination comes on when switch operation is ON position.

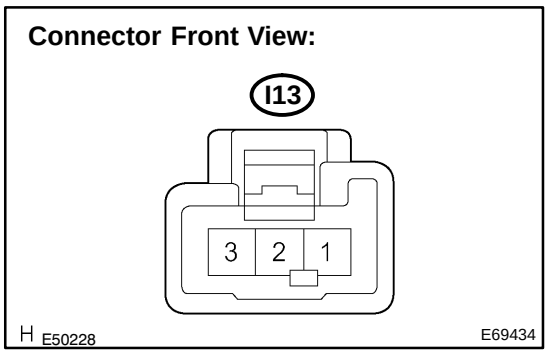

11. ROOM LAMP ASSY NO.1

(a) Connect the positive (+) lead from the battery to terminal 1 and the negative (–) lead to terminal 2, then check that the illumination comes on .

12. LUGGAGE COMPARTMENT LAMP ASSY NO.1

(a) Connect the positive (+) lead from the battery to terminal 1 and the negative (–) lead to terminal 2, then check that the illumination comes on .

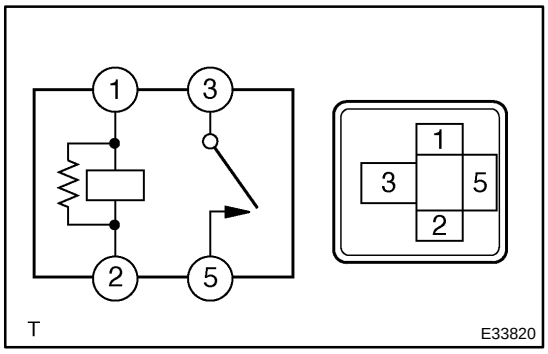

13. HEADLAMP RELAY

(a) Measure the resistance according to the value(s) in the table below.

Standard:

Tester connection	Condition	Specified resistance
3 – 5	Always	10 kΩ or higher
3 – 5	Apply B+ between terminals 1 and 2	Below 1 Ω

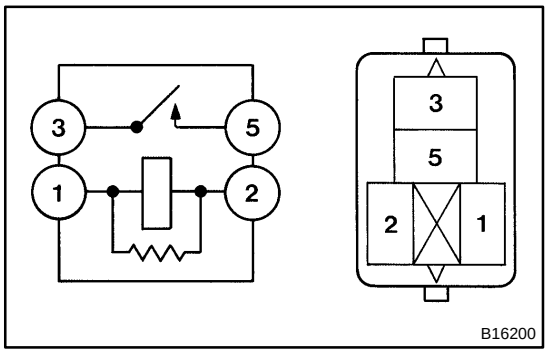

14. FOG LAMP RELAY

(a) Measure the resistance according to the value(s) in the table below.

Standard:

Tester connection	Condition	Specified resistance
3 – 5	Always	10 kΩ or higher
3 – 5	Apply B+ between terminals 1 and 2	Below 1 Ω

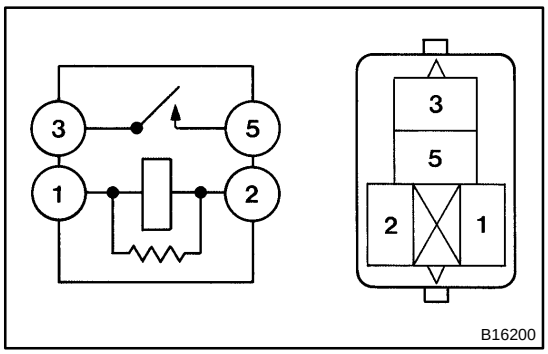

15. TAILLAMP RELAY

(a) Measure the resistance according to the value(s) in the table below.

Standard:

Tester connection	Condition	Specified resistance
3 – 5	Always	10 kΩ or higher
3 – 5	Apply B+ between terminals 1 and 2	Below 1 Ω

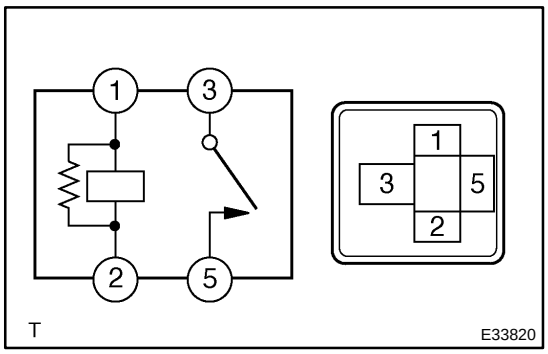

16. HEADLAMP DIMMER RELAY

(a) Measure the resistance according to the value(s) in the table below.

Standard:

Tester connection	Condition	Specified resistance
3 – 5	Always	10 kΩ or higher
3 – 5	Apply B+ between terminals 1 and 2	Below 1 Ω

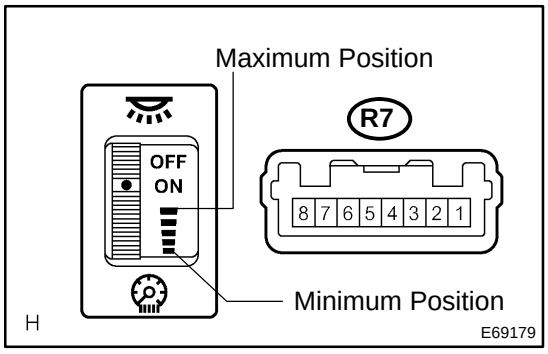

17. LIGHT CONTROL RHEOSTAT

(a) Connect the connector to the rheostat and inspect the wire harness side connector from the back side as shown in the table below.

Standard:

Tester connection	Switch operation	Specified condition
1 – 3	Maximum position	Below 1 V
1 – 3	Minimum position	10 to 14 V
3 – 7	OFF	10 to 14 V
3 – 7	ON	Below 1 V

(b) Inspect illumination operation.

(1) Connect the positive (+) lead from the battery to terminal 2 and the negative (–) lead to terminal 3, then check that the illumination comes on.

REPLACEMENT

HINT:

COMPONENTS: See page 65–12

1. REMOVE RADIATOR GRILLE SUB–ASSY(See page 76–2)

2. REMOVE FRONT BUMPER COVER(See page 76–2)

3. REMOVE LH HEADLAMP ASSY

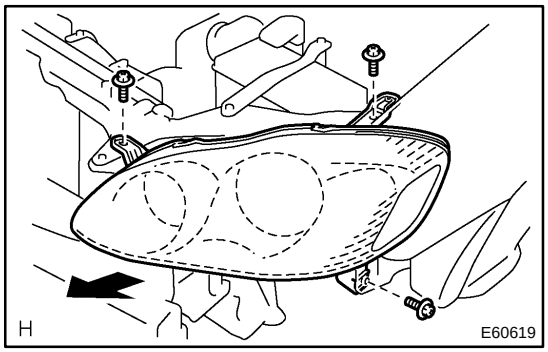

(a) Remove the 3 bolts.

(b) Pull out the headlight assy LH forward, then disconnect the bracket of body side.

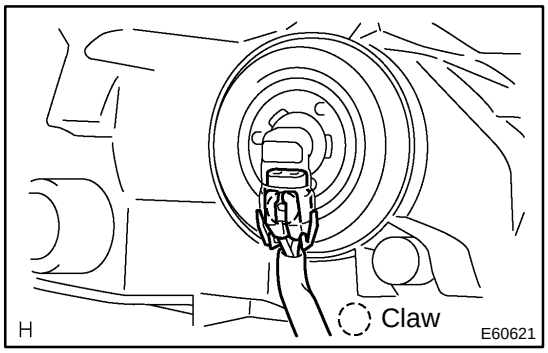

(c) Release the claws and disconnect the connectors as shown in the illustration, and remove the headlight assy LH.

4. INSTALL RETAINER, HEADLAMP PROTECTOR, UPR LH

HINT:

When only the installation part of the headlight assy LH is damaged, it can be repaired inexpensively by using a headlight protector retainer UPR LH. In this case, however, the headlight assy LH itself should not be damaged.

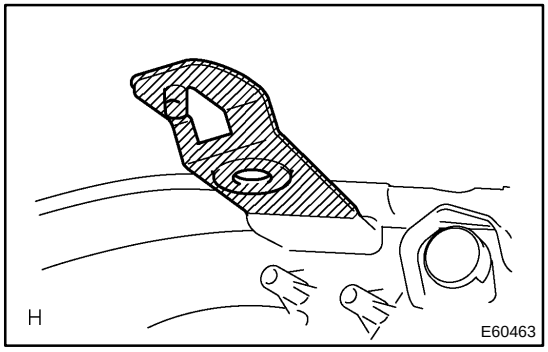

(a) Cut off the part shaded in the illustration and sand smooth with sandpaper.

NOTICE:

After cutting off the part roughly, place the headlight protector retainer UPR LH against the bosses and gradually file any interfering part until the proper condition for installation is made.

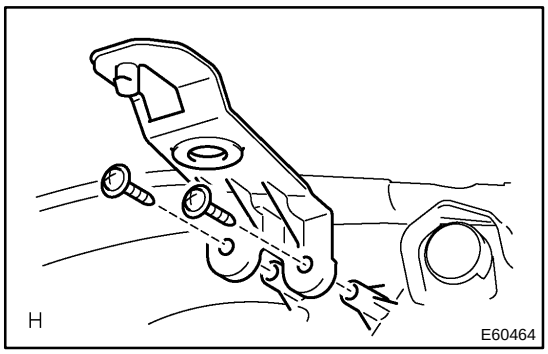

(b) Install the headlight protector retainer UPR LH with 2 screws.

5. INSTALL RETAINER, HEADLAMP PROTECTOR, LWR LH

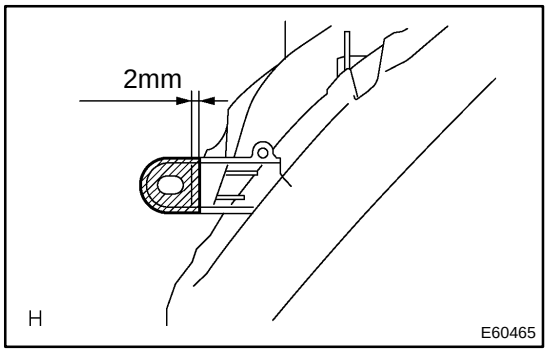

(a) Cut off the part shaded in the illustration and sand smooth with sandpaper.

NOTICE:

After cutting off the part roughly, place the headlight protector retainer LWR LH against the bosses and gradually file any interfering part until the proper condition for installation is made.

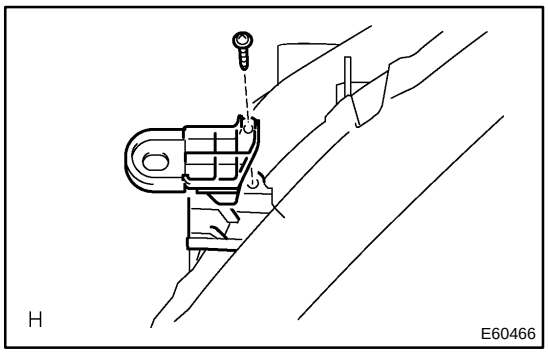

(b) Install the headlight protector retainer LWR LH with a screw.

6. PUT VEHICLE THESE CONDITIONS(See page 65–18)
7. ADJUST FOG LIGHT AIM(See page 65–18)
8. HEADLIGHT AIM ONLY(See page 65–15)

LICENSE PLATE LAMP ASSY

650GX–01

REPLACEMENT

1. **REMOVE LUGGAGE COMPARTMENT LOCK CYLINDER & KEY SET(See Page 76–16)**
2. **REMOVE LUGGAGE COMPARTMENT DOOR GARNISH OUTSIDE(See Page 76–16)**

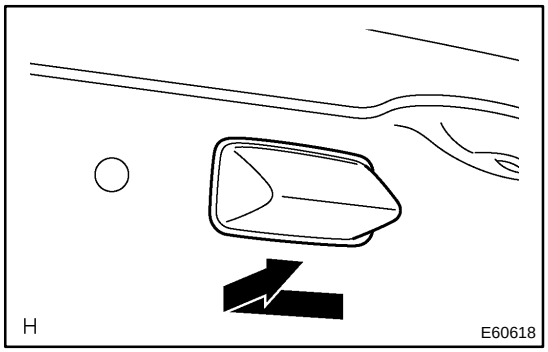

3. **REMOVE LICENSE PLATE LAMP ASSY**

(a) Pull the license plate light assy to the side of vehicle as shown in the illustration and release the claw.

(b) Disconnect the connector and remove the license plate light assy.

4. **INSTALL SYMBOL EMBLEM(See Page 76–16)**

650WN–01

ON–VEHICLE INSPECTION

Connector Front View:

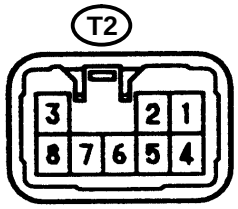

E15683

1. INSPECT TURN SIGNAL FLASHER RELAY CIRCUIT

(a) Disconnect the connector from the turn signal flasher relay and inspect the connector on wire harness side as shown in the chart.

Standard:

Tester connection	Condition	Specified condition
7 – Ground	Constant	Below 1 Ω
1 – Ground	Ignition switch ON	10 to 14 V
1 – Ground	Ignition switch OFF	Below 1 V
4 – Ground	Constant	10 to 14 V

(b) Connect the connector to the turn signal flasher and inspect the wire harness side connector from the back side as shown in the chart.

Standard:

Tester connection	Condition	Specified condition
2 – Ground	Hazard warning signal switch OFF → ON	0 V → 0 ⇔ Above 9 V (60 to 120 times per minute)
2 – Ground	Turn signal switch (right turn) OFF → ON	0 V → 0 ⇔ Above 9 V (60 to 120 times per minute)
3 – Ground	Hazard warning signal switch OFF → ON	0 V → 0 ⇔ Above 9 V (60 to 120 times per minute)
3 – Ground	Turn signal switch (left turn) OFF → ON	0 V → 0 ⇔ Above 9 V (60 to 120 times per minute)
5 – Ground	Turn signal switch (left turn) OFF → ON	Above 9 V → 0 V
6 – Ground	Turn signal switch (right turn) OFF → ON	Above 9 V → 0 V
8 – Ground	Hazard warning signal switch OFF → ON	Above 9 V → 0 V

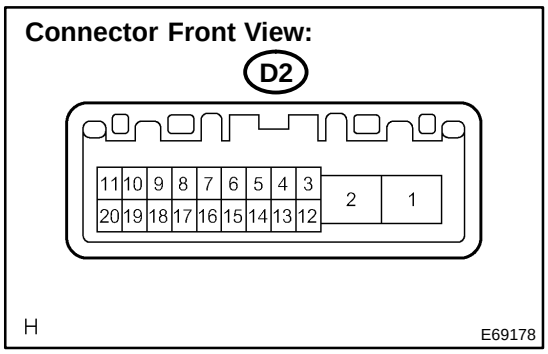

2. INSPECT DAYTIME RUNNING LIGHT RELAY

(a) Connect the connector to the daytime running light relay and inspect the wire harness side connector from the back side as shown in the table below.

Standard:

Tester connection	Condition	Specified condition
1 – Body ground	Light control switch OFF or TAIL → HEAD	Below 1 V → Below 1 V
2 – Body ground	Always	Below 1 V
3 – Body ground	Always	10 to 14 V
4 – Body ground	Light control switch HEAD → OFF or TAIL	Below 1 V → 10 to 14 V
6 – Body ground	Light control switch OFF or TAIL → HEAD	10 to 14 V → Below 1 V
7 – Body ground	Light control switch OFF or TAIL → HEAD	10 to 14 V → Below 1 V
8 – Body ground	Engine stops → Running	Below 1 V → 10 to 14 V
10 – Body ground	Brake fluid level low → Maximum	Below 1 V → 10 to 14 V
11 – Body ground	Parking brake lever is released → ON	10 to 14 V → Below 1 V
12 – Body ground	Ignition switch OFF → ON	Below 1 V → 10 to 14 V
13 – Body ground	Light control switch OFF or TAIL → Light control switch HEAD and headlight dimmer switch is HIGH or FLASH	Below 1 V → Below 1 V
14 – Body ground (*1)	Light control switch OFF → TAIL or HEAD	10 to 14 V → Below 1 V
15 – Body ground (*1)	Light control switch OFF → TAIL or HEAD	10 to 14 V → Below 1 V
16 – Body ground	Headlight dimmer switch LOW → HIGH or FLASH	10 to 14 V → Below 1 V
18 – Body ground (*1)	Always	Below 1 V
19 – Body ground (*1)	Ignition switch OFF → ON	Below 1 V → 10 to 14 V
20 – Body ground (*1)	Ignition switch OFF → ON	Below 1 V → 10 to 14 V

*1: USA only.

3. ILLUMINATED ENTRY SYSTEM OPERATION CHECK

(a) The illuminated entry system controls the room lamp assy No.1.

(b) Check that the lamps come on when any of the doors are opened. Then check that the lamps fade out under any one of the following conditions:
   (1) 15 seconds after all the doors are closed.
   (2) The ignition switch is turned to the ON position with all the doors closed.
   (3) All the doors are closed and locked.

(c) Check that the lamps stay on for at least 15 seconds after opening any of the doors before fading out as described in (b). Then check that the lamps fade out in 15 seconds after closing all the doors.

(d) Check that the lamps come on when opening any of the doors and fade out when closing and locking all the doors or turning the ignition switch to the ACC or ON position.

4. BATTERY SAVER OPERATION CHECK

(a) Remove the ignition key and close all the doors.

(b) Open any door to turn the room light on, and leave it open. Check that the light goes off after approx. 20 minutes.

(c) After the room light goes off, close the door.

(d) Open any door to turn the room light on, and then open another door. Check that the room light goes off after approx. 20 minutes after opening the doors.

(e) Close all the doors. With the ignition key inserted, open any door to turn the room light on, and then remove the ignition key. Check that the room light goes off after approx. 20 minutes.

LIGHTING SYSTEM (Apr., 2003)

650WL–01

PRECAUTION

1. PRECAUTION OF HEADLIGHT BULB REPLACEMENT

(a) If even a thin film of oil is left on the surface of the halogen lamp, its service life will be shortened because the lamp will be burn at a higher temperature.

(b) Handle any halogen lamp with great care. Dropping, hitting or damaging the bulb, in any way, may result in it exploding and scattering because the internal pressure is high.

(c) Always prepare a new bulb for immediate replacement. While replacing the bulb, the lens may attract dust and moisture if removed from the vehicle for too long.

(d) Always use a bulb of the same wattage for replacement.

(e) Firmly reinstall the socket after bulb replacement. The lens may become cloudy or the light cavity may fill with water through the gaps around the socket.

REAR COMBINATION LAMP ASSY LH

650GW–01

REPLACEMENT

1. REMOVE REAR COMBINATION LAMP ASSY LH

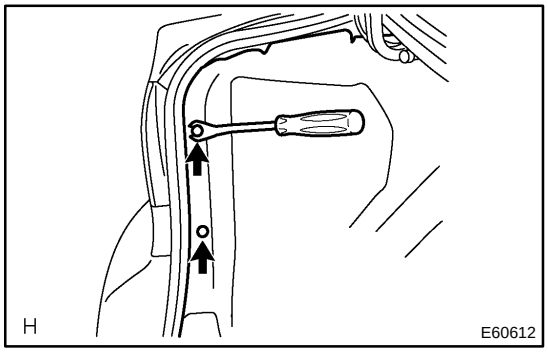

(a) Using a clipremover, remove the 2 clips and disconnect the luggage compartment trim cover LH.

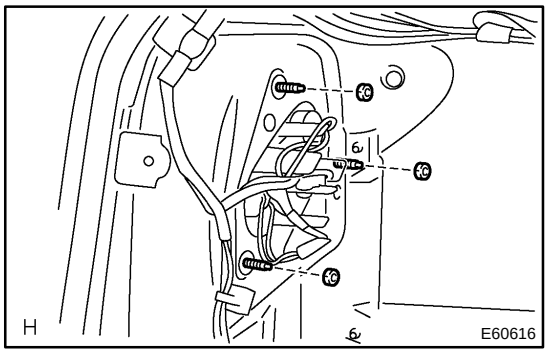

(b) Disconnect the connector and remove the 3 nuts.

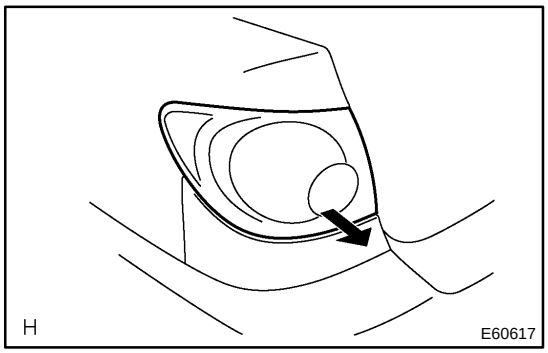

(c) Pull out the rear combination light assy LH to the back of the vehicle, and remove.

650WM–01

PROBLEM SYMPTOMS TABLE

HINT:

Use the table below to help determine the cause of the problem. The numbers indicate the priority of the likely cause of the problem. Check each part in order. If necessary, replace these parts.

1. HEADLAMP AND TAIL LAMP

Symptom	Suspected Area	See page
”LO–Beam” does not come on (One side).	1. Bulb 2. HEAD RH LWR fuse or HEAD LH LWR fuse 3. Wire harness	– – –
”LO–Beam” does not come on (All).	1. HEAD Relay 2. Headlamp dimmer switch assy 3. Daytime running light relay 4. Wire harness	65–7 65–7 65–4 –
”HI–Beam” does not come on (One side).	1. Bulb 2. HEAD RH UPR fuse or HEAD LH UPR fuse 3. Wire harness	– – –
”HI–Beam” does not come on (All).	1. DIMMER relay 2. Headlamp dimmer switch assy 3. Daytime running light relay 4. Wire harness	65–7 65–7 65–4 –
”Flash” does not operate (All).	1. Headlamp dimmer switch assy 2. Daytime running light relay 3. Wire harness	65–7 65–4 –
Headlamp is dark.	1. Bulb 2. Wire harness	– –
Only one tail lamp comes on.	1. Bulb 2. Wire harness	– –
Both tail lamps do not come on (Headlamps are normal).	1. TAIL fuse 2. TAIL relay (USA only) 3. Headlamp dimmer switch assy 4. Daytime running light relay (USA only) 5. Wire harness	– 65–7 65–7 65–4 –
Both tail lamps do not come on (Headlamps do not come on).	1. Headlamp dimmer switch assy 2. Wire harness	65–7 –
Headlamp does not come on with engine running, parking brake released, and light control switch off.	1. HEAD relay 2. Generator 3. Parking brake switch 4. Daytime running light relay 5. Wire harness	65–7 – – 65–4 –

2. FRONT FOG LAMP SYSTEM

Symptom	Suspected Area	See page
Front fog lamps do not come on with light control switch in the HEAD position (Headlamps are normal).	1. FOG fuse 2. FOG relay 3. Headlamp dimmer switch assy 4. Wire harness	– 65–7 65–7 –
Only one front fog lamp does not come on.	1. Bulb 2. Wire harness	– –

3. TURN SIGNAL AND HAZARD WARNING SYSTEM

Symptom	Suspected Area	See page
”Hazard” and ”Turn” do not come on.	1. HAZARD fuse 2. Turn signal flasher relay 3. Wire harness	– 65–4 –
Hazard warning lamp does not come on. (Turn is normal)	1. Hazard warning signal switch assy 2. Wire harness	65–7 –
Turn signal does not come on. (Hazard is normal)	1. Headlamp dimmer switch assy 2. Wire harness	65–7 –
Turn signal does not come on in one direction.	1. Headlamp dimmer switch assy 2. Wire harness	65–7 –
Only one bulb does not come on.	1. Bulb 2. Wire harness	– –

4. STOP LAMP SYSTEM

Symptom	Suspected Area	See page
Both stop lamps do not come on.	1. STOP fuse 2. Stop lamp switch assy 3. Wire harness	– 65–7 –
Stop lamp always remains ON.	1. Stop lamp switch assy 2. Wire harness	65–7 –
Stop lamp does not come on (One side).	1. Bulb 2. Wire harness	– –

5. BACK UP LAMP SYSTEM

Symptom	Suspected Area	See page
Both back up lamps do not come on.	1. GAUGE fuse 2. Back up lamp switch (M/T) 3. Park/Neutral Position switch (A/T) 4. Wire harness	– 65–7 05–379 –
Both back up lamps remain always ON.	1. Back up lamp switch (M/T) 2. Park/Neutral Position switch (A/T) 3. Wire harness	65–7 05–379 –
Back up lamp does not come on (One side).	1. Bulb 2. Wire harness	– –

6. INTERIOR LAMP SYSTEM

Symptom	Suspected Area	See page
Room lamp do not come on.	1. Bulb 2. Wire harness	– –

7. LIGHT CONTROL RHEOSTAT SYSTEM

Symptom	Suspected Area	See page
Light control rheostat system does not operate.	1. Light control rheostat 2. Wire harness	65–7 –

66070–01

INSPECTION

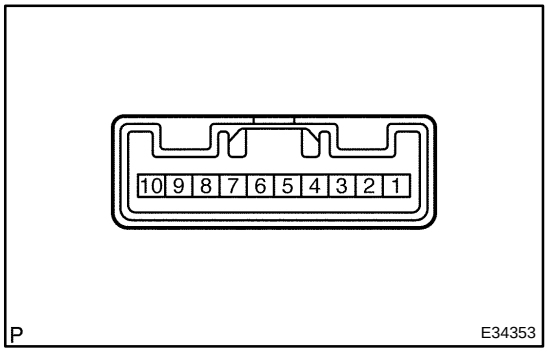

1. WINDSHIELD WIPER SWITCH ASSY

(a) Continuity Check

(1) Check the continuity of each terminal of the connector.

Front Wiper Switch

Standard:

Switch position	Tester connection	Specified condition
MIST	7 (+1) – 8 (+B)	Continuity
OFF	6 (+S) – 7 (+1)	Continuity
INT	6 (+S) – 7 (+1)	Continuity
LO	7 (+1) – 8 (+B)	Continuity
HI	8 (+B) – 9 (+2)	Continuity

Front Washer Switch

Standard:

Switch position	Tester connection	Specified condition
OFF	–	No continuity
ON	4 (W) – 5 (EW)	Continuity

(b) w/o Intermittent time adjust:

Intermittent Operation Check

(1) Connect the voltmeter (+) terminal to terminal 7 (+1) of the connector, the voltmeter (–) terminal to terminal 5 (EW) of the connector.

(2) Connect the battery (+) to terminal 8 (+B) of the connector, the battery (–) to terminal 5 (EW) and 6 (+S) of the connector.

(3) Turn the wiper switch to the INT position.

(4) Connect the battery (+) to terminal 6 (+S) of the connector for 5 seconds.

(5) Connect the battery (–) to terminal 6 (+S) of the connector. Operate the intermittent wiper relay and check voltage between terminal 7 (+1) and terminal 5 (EW).

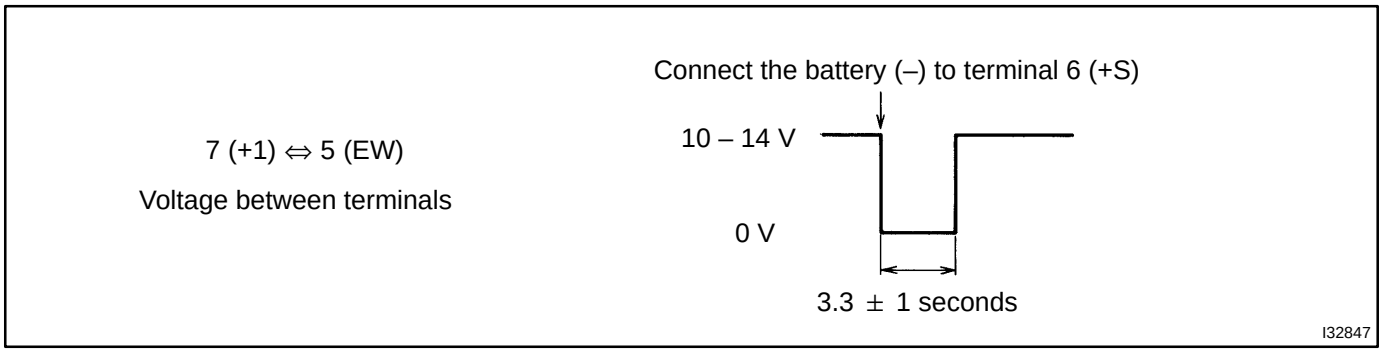

(c) w/ Intermittent time adjust:
Intermittent Operation Check
(1) Connect the voltmeter (+) terminal to terminal 7 (+1) of the connector, the voltmeter (–) terminal to terminal 5 (EW) of the connector.
(2) Connect the battery (+) to terminal 8 (+B) of the connector, the battery (–) to terminal 5 (EW) and 6 (+S) of the connector.
(3) Turn the wiper switch to the INT position.
(4) Connect the battery (+) to terminal 6 (+S) of the connector for 5 seconds.
(5) Connect the battery (–) to terminal 6 (+S) of the connector. Operate the intermittent wiper relay and check voltage between terminal 7 (+1) and terminal 5 (EW).

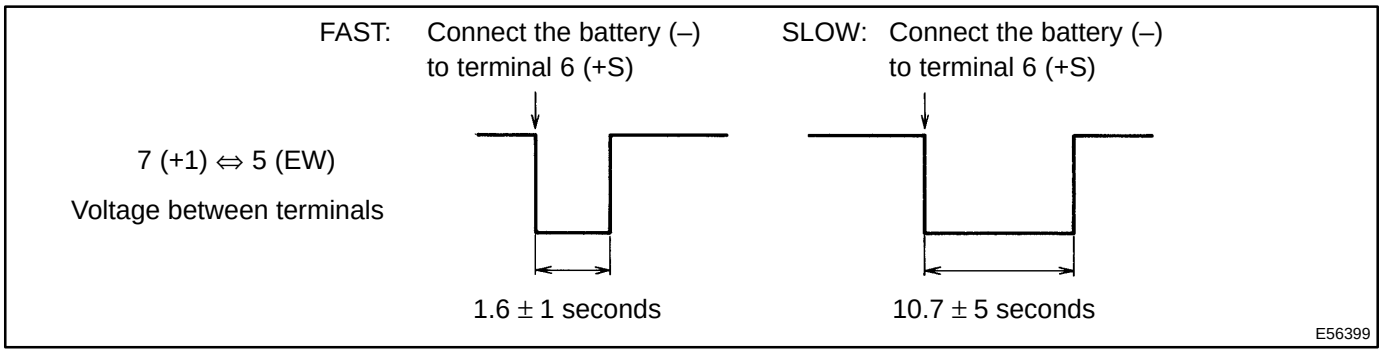

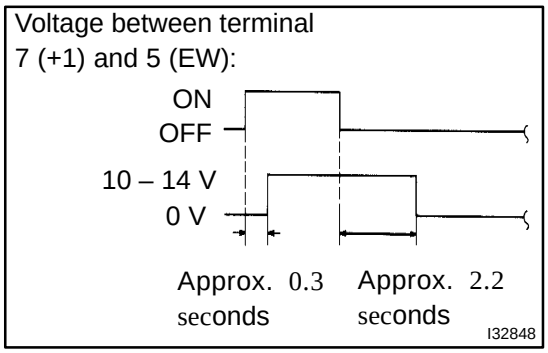

(d) Operation Check (Washer switch)
(1) Turn the wiper switch to the OFF position.
(2) Connect the battery (+) to terminal 8 (+B) of the connector, the battery (–) to terminal 6 (+S) and 5 (EW) of the connecter.
(3) Connect the voltmeter (+) terminal to terminal 7 (+1) of the connector, the voltmeter (–) terminal to terminal 5 (EW) of the connector. Turn the washer switch to ON and OFF and check voltage between terminal 7 (+1) and terminal 5 (EW).

Standard: See the illustration.

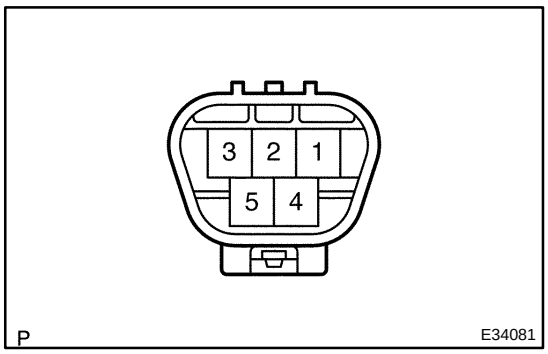

2. WINDSHIELD WIPER MOTOR ASSY

(a) LO Operation Check

(1) Connect the battery (+) to terminal 1 (+1) of the connector, the battery (–) to terminal 5 (E) of the connector, and check that the motor operates at low speed (LO).

(b) HI Operation Check

(1) Connect the battery (+) to terminal 4 (+2) of the connector, the battery (–) to terminal 5 (E) of the connector, and check that the motor operates at high speed (HI).

(c) Automatic Stop Operation Check

(1) Connect the battery (+) to terminal 1 (+1) of the connector, the battery (–) to terminal 5 (E) of the connector. With the motor being rotated at low speed (LO), disconnect terminal 1 (+1) to stop the wiper motor operation at any position except the automatic stop position.

(2) Connect terminal 1 (+1) and 3 (S), and the battery (+) to terminal 2 (B) to restart the motor operation at low speed.

SST 09843–18040

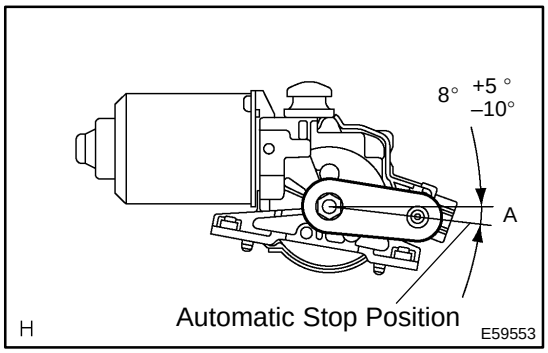

(3) Check that the automatic stop position is correct.

Standard: See the illustration.

6606Z–01

ON–VEHICLE INSPECTION

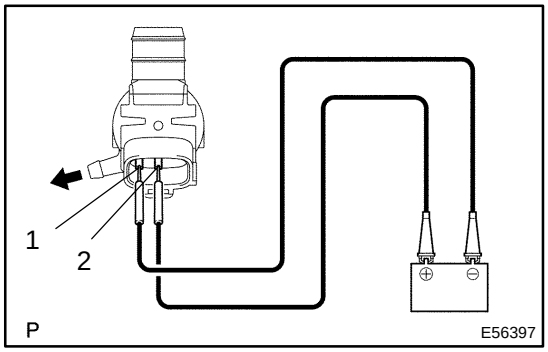

1. WASHER MOTOR

(a) Operation Check

(1) Pour the water into the washer jar with the washer motor and the pump installed to the washer jar assy.

(2) Connect the battery (+) to terminal 2 of the washer motor and the pump, the battery (–) to terminal 1 of the washer motor and the pump. Check that the water comes out from the washer jar.

WIPER AND WASHER SYSTEM

6606Y–01

PROBLEM SYMPTOMS TABLE

1. WIPER AND WASHER SYSTEM

Symptom	Suspect Area	See page
Front wipers do not operate.	1. IG1 Relay 2. WIPER Fuse 3. Front Wiper Switch 4. Wire Harness	– – 66–3 –
Front wipers do not operate in LO or HI.	1. Front Wiper Switch 2. Front Wiper Motor 3. Wire Harness	66–3 66–3 –
Front wipers do not operate in INT.	1. Front Wiper Switch 2. Front Wiper Motor 3. Wire Harness	66–3 66–3 –
Front washer motor does not operate.	1. WIPER Fuse 2. Front Washer Switch 3. Front Washer Motor 4. Wire Harness	– 66–3 66–2 –
Front wipers do not operate when washer switch is in the ON position.	1. Front Wiper Switch 2. Front Wiper Motor 3. Wire Harness	66–3 66–3 –
Washer fluid does not operate.	1. Washer Hose and Nozzle	–
• When the wiper switch is OFF, the wiper blade does not retract or the retract position is wrong. • The wiper blade is in contact with the body.	1. Wiper Motor (wiper arm and blade set position)	66–6

WASHER NOZZLE

66074–01

ADJUSTMENT

1. INSPECT WASHER NOZZLE

(a) With the engine running, check that the point where the washer fluid hits the windshield and the rear window is within the range indicated by the hatched line.

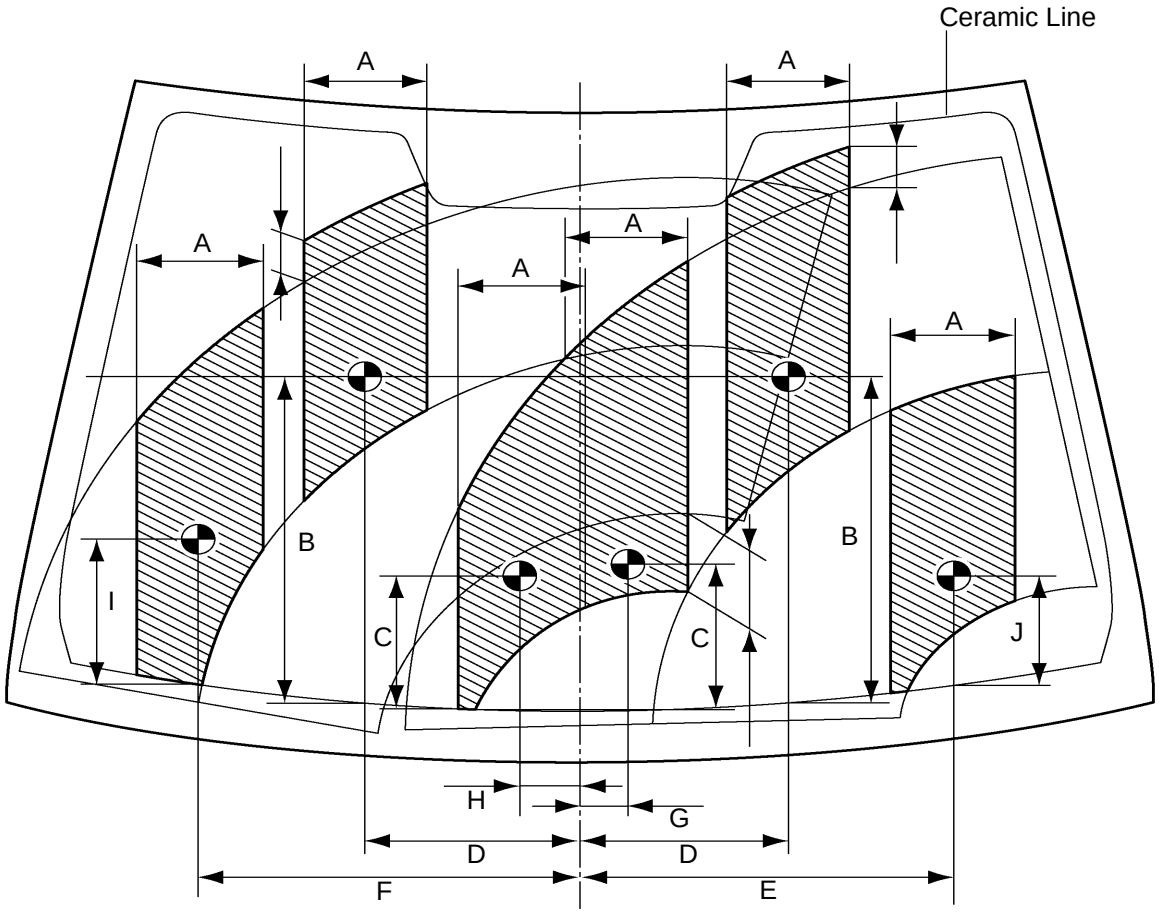

A:150mm(5.91in.)
B:440mm(17.32in.)
C:180mm(7.09in.)
D:260mm(10.24in.)
E:455mm(17.91in.)
F:465mm(18.31in.)
G:65mm(2.56in.)
H:70mm(2.76in.)
I:200mm(7.87in.)
J:155mm(6.10in.)

E60687

WINDSHIELD WIPER SWITCH ASSY

66073–01

REPLACEMENT

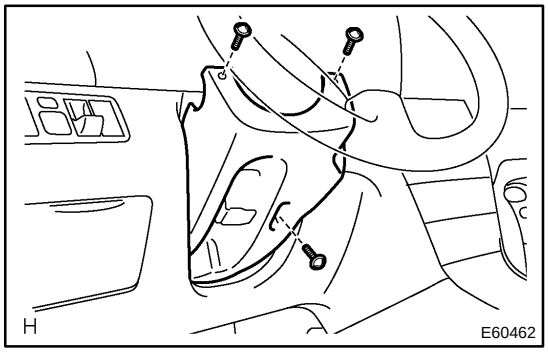

1. REMOVE STEERING COLUMN COVER LWR

(a) Remove 3 screws and steering column cover LWR.

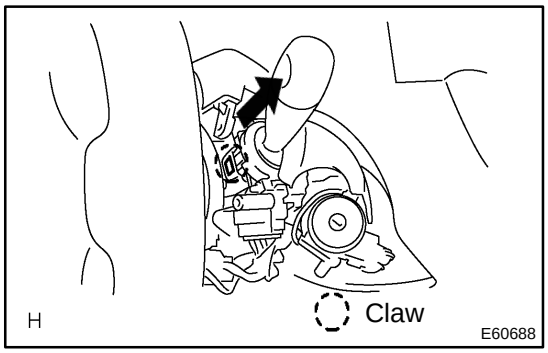

2. REMOVE WINDSHIELD WIPER SWITCH ASSY

(a) Disconnect the connecter of the windshield wiper switch.

(b) Release the claw and pull out the windshield wiper switch assy as shown in the illustration.

NOTICE:

Pressing the claw hard breaks the claw.

WINDSHIELD WIPER MOTOR ASSY

66071–01

REPLACEMENT

1. REMOVE WINDSHIELD WIPER ARM COVER

2. REMOVE FR WIPER ARM RH

(a) Operate the wiper and stop the windshield wiper motor assy at the automatic stop position.

(b) Remove a nut and FR wiper arm RH.

3. REMOVE FR WIPER ARM LH

(a) Remove a nut and FR wiper arm LH.

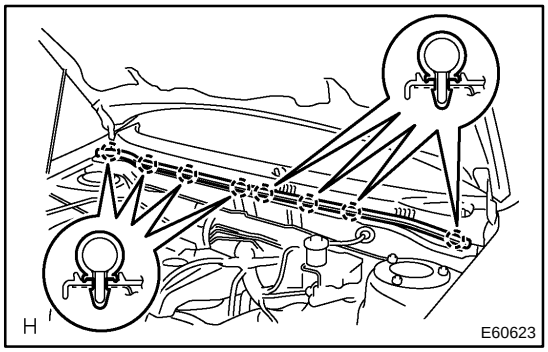

4. REMOVE HOOD TO COWL TOP SEAL

(a) Using a clipremover, disengage the meshing of 8 clips and remove the hood to cowl top seal.

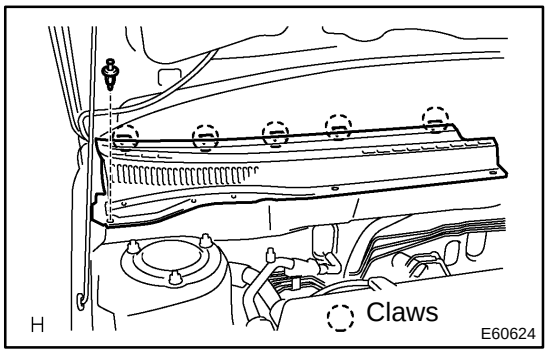

5. REMOVE COWL TOP VENTILATOR LOUVER RH

(a) Remove a clip and release the 5 claws, and remove the cowl top ventilator louver RH.

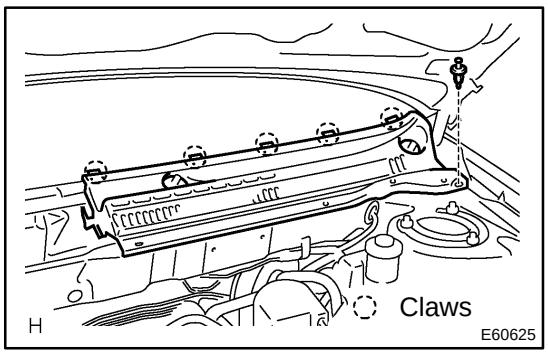

6. REMOVE COWL TOP VENTILATOR LOUVER LH

(a) Remove a clip and release the 5 claws, and remove the cowl top ventilator louver LH.

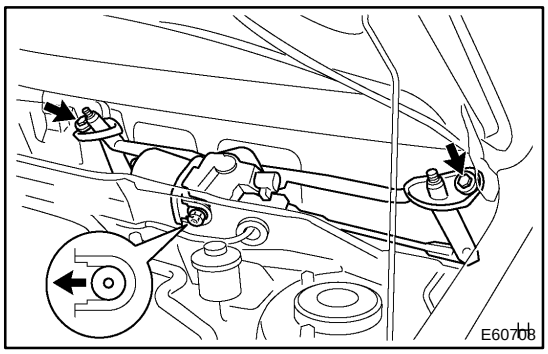

7. REMOVE WIPER LINK ASSY

(a) Disconnect the connector.

(b) Remove the 2 bolts.

(c) Slide the wiper link assy to vehicle's passengers side. Disengage the meshing of the rubber pin and remove the wiper link assy.

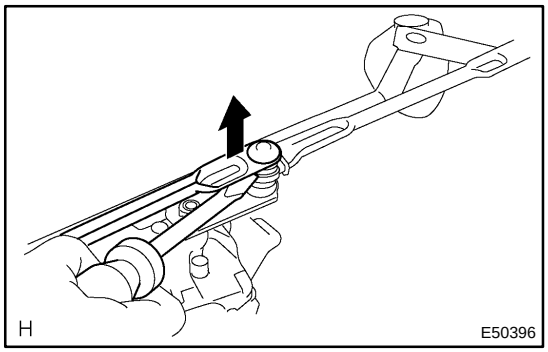

8. REMOVE WINDSHIELD WIPER MOTOR ASSY

(a) Using a screwdriver and disengage the meshing of 2 rods at the clank arm pivot of the windshield wiper motor assy.

HINT:

Tape the screwdriver tip before use.

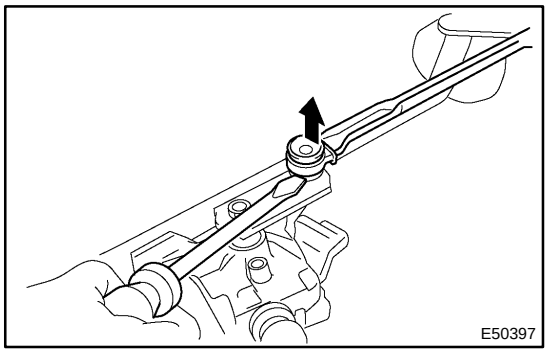

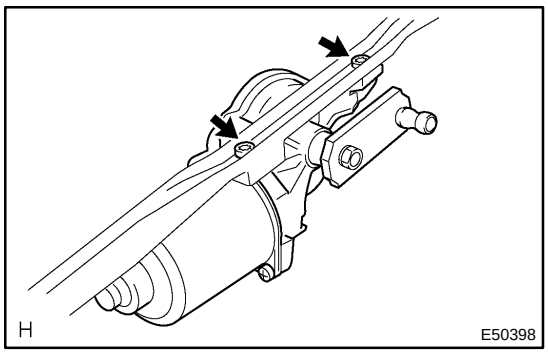

(b) Remove 2 torx bolts and windshield wiper motor assy.

9. INSTALL WINDSHIELD WIPER MOTOR ASSY

(a) Apply MP grease to the clank arm pivot of the windshield wiper motor assy.

(b) Using 2 torx bolts, install the windshield wiper motor assy to the windshield wiper link assy.
Torque: 7.5 N·m (76 kgf·cm, 66 in.·lbf)

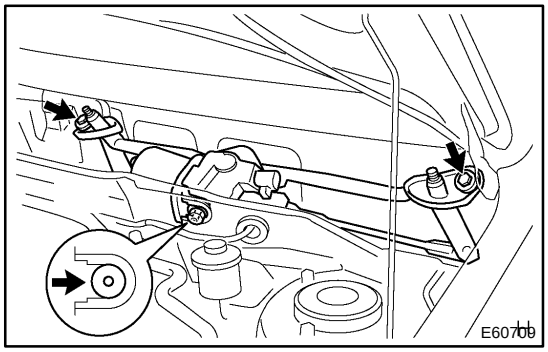

10. INSTALL WIPER LINK ASSY

(a) Install the meshing of the rubber pin.

(b) Install the windshield wiper link assy.with the 2 bolts.
Torque: 5.5 N·m (56 kgf·cm, 49 in.·lbf)

(c) Connect the connecter.

11. INSTALL FR WIPER ARM LH

(a) Operate the wiper, and stop the windshield wiper motor assy at the automatic stop position.

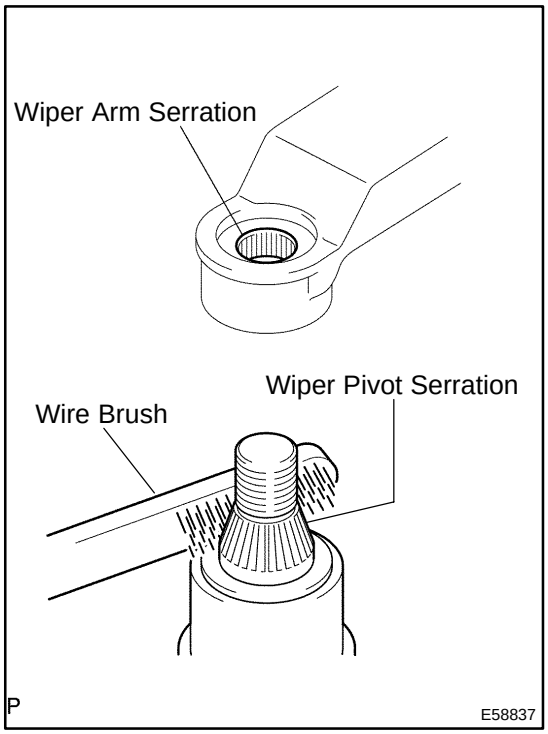

(b) Scrape off the serration part of the wiper arm with a round file or equivalent.

(c) Clean the wiper pivot serration with the wire brush.

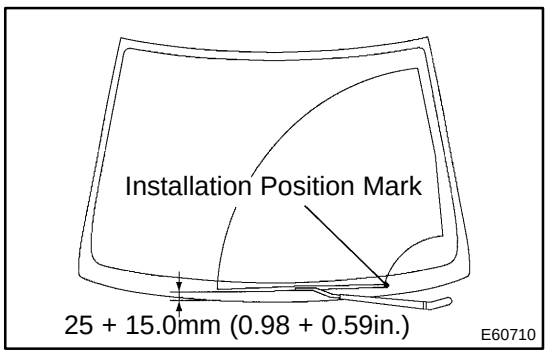

(d) Install the front wiper arm LH with a nut at the position as shown in the illustration.
Torque: 20.5 N·m (209 kgf·cm, 15 ft·lbf)

HINT:

Hold down the arm hinge with hand to fasten a nut.

12. INSTALL FR WIPER ARM RH

(a) Scrape off the serration part of the wiper arm with a round file or equivalent.

(b) Clean the wiper pivot serration with the wire brush.

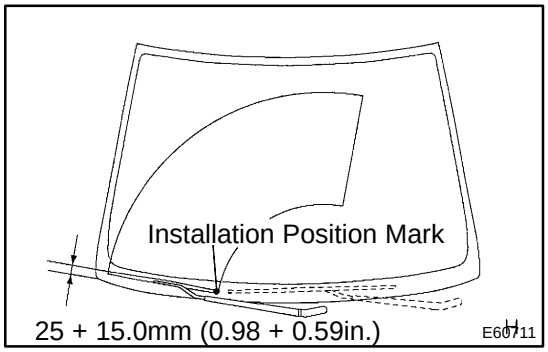

(c) Install the front wiper arm RH with a nut to the position shown in the illustration.

Torque: 20.5 N·m (209 kgf·cm, 15 ft·lbf)

HINT:

Hold down the arm hinge with hand to fasten a nut.

(d) Operate the wiper while running the water or the washer fluid over the window, and check the wiping condition and that the rear wiper does not hit against the vehicle body.

WIPER RUBBER LH

66072–01

REPLACEMENT

1. REMOVE FR WIPER BLADE LH

(a) Remove the front wiper blade LH from the front wiper arm LH.

NOTICE:

Do not fold down the front wiper arm with the front wiper blade being removed from it.

2. REMOVE WIPER RUBBER LH

(a) Remove the front wiper rubber LH from the front wiper blade.

(b) Remove the 2 wiper rubber backing plates from the wiper rubber LH.

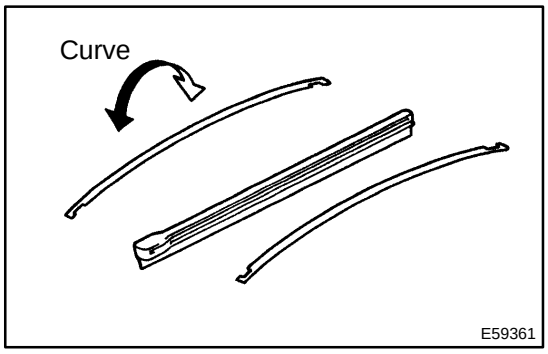

3. INSTALL WIPER RUBBER LH

(a) Install the 2 wiper rubber backing plates to the wiper rubber LH.

NOTICE:

Be careful to observe and keep direction of curvature for correct replacement.

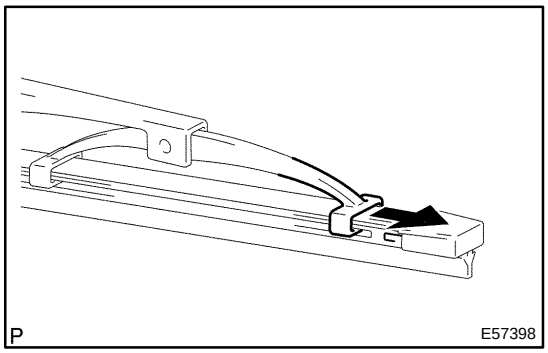

(b) Install the wiper rubber LH so that the head part (Larger side) of the wiper rubber faces the arm axie side.

NOTICE:

Push the front wiper blade into the grooves of the wiper rubber to engage them completely.

AMPLIFIER ANTENNA ASSY

670E4–01

REPLACEMENT

HINT:

COMPONENTS: See page 67–1

1. REMOVE ROOF HEADLINING ASSY(See page 76–21)

NOTICE:

Do not bend the roof headlining assy.

HINT:

- Refer to the procedure from ”REMOVE ROOF HEADLINING ASSY” of ROOF HEADLINING ASSY.
- Remove the related parts as long as the amplifier antenna assy can be removed.

2. REMOVE ROOF ANTENNA POLE SUB–ASSY(See page 67–13)

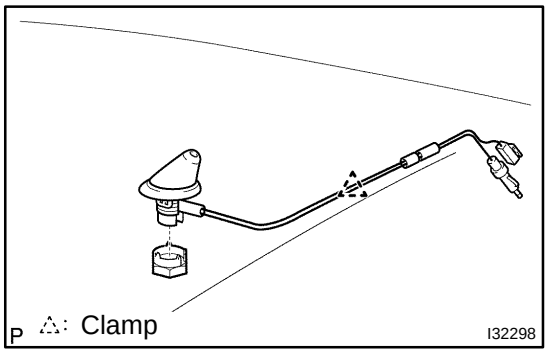

3. REMOVE AMPLIFIER ANTENNA ASSY

(a) Disconnect the connector and antenna cord plug.

(b) Remove the clamp.

(c) Remove the antenna nut and amplifier antenna assy.

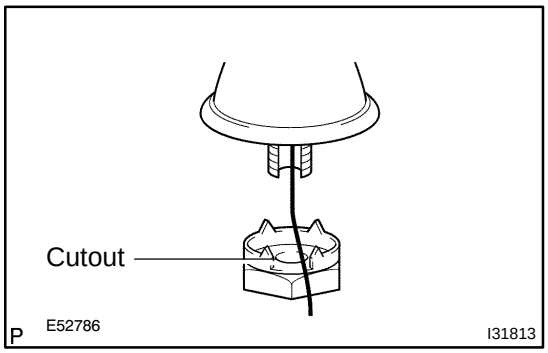

4. INSTALL AMPLIFIER ANTENNA ASSY

(a) Set the amplifier antenna assy to the hole on the roof, and place the antenna cord on the cutout of the antenna nut.

(b) Install the amplifier antenna assy with the antenna nut.
Torque: 4.5 N·m (46 kgf·cm, 40 in.·lbf)

5. INSTALL ROOF HEADLINING ASSY(See page 76–21)

6. INSTALL REAR SEAT BACK ASSY (FIXED TYPE REAR SEAT)(See page 72–8)

7. INSTALL REAR SEAT BACK ASSY (SEPARATED TYPE REAR SEAT)(See page 72–6)

8. INSTALL BENCH TYPE REAR SEAT CUSHION ASSY(See page 72–6 or 72–8)

ANTENNA CORD SUB–ASSY

670E3–01

REPLACEMENT

HINT:

COMPONENTS: See page 67–1

1. REMOVE INSTRUMENT PANEL SUB–ASSY UPPER(See page 71–10)

HINT:

- Refer to the procedure until the step, ”REMOVE INSTRUMENT PANEL SUB–ASSY UPPER” of INSTRUMENT PANEL SUB–ASSY LOWER.
- Remove the related parts as long as the antenna cord sub–assy can be removed.

2. REMOVE VISOR HOLDER(See page 76–21)

HINT:

- Refer to the procedure until the step, ”REMOVE VISOR HOLDER” of ROOF HEADLINING ASSY.
- Remove the parts related to the roof headlining assy in the range that antenna cord can be cut off.

3. REMOVE SUN ROOF OPENING TRIM MOULDING (W/ SLIDING ROOF)

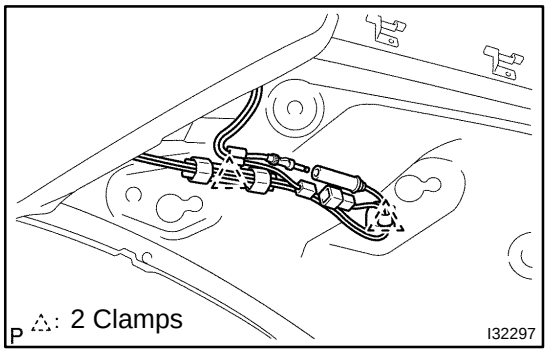

4. DISCONNECT ANTENNA CORD SUB–ASSY

(a) REAR SIDE:
Disconnect the connector and antenna cord plug.

(b) REAR SIDE:
Remove the 2 clamps.

(c) FRONT SIDE:
Remove the 9 clamps.

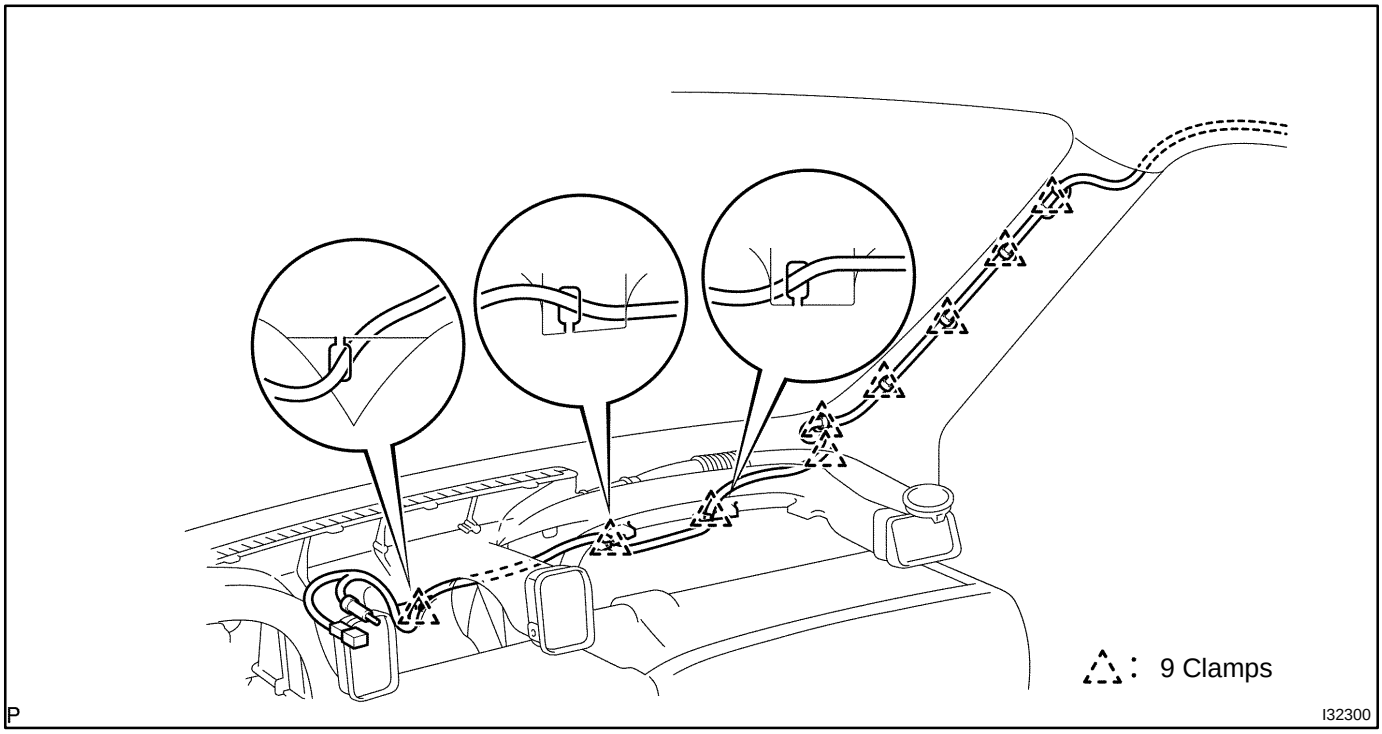

5. REMOVE ROOF HEADLINING ASSY(See page 76–21)

NOTICE:

Do not bend the roof headlining assy.

6. REMOVE ANTENNA CORD SUB–ASSY

(a) Remove the antenna cord sub–assy from the roof headlining.

7. INSTALL ANTENNA CORD SUB–ASSY

(a) Tape the antenna cord sub–assy at the position of the roof headlining shown in the illustration.

NOTICE:

- **The antenna cord sub–assy should come to the center of the tape (100 mm(3.94 in.) x 25 mm(0.98 in.)) when taped.**
- **Try not to touch the adhesive side of the tape when taping.**

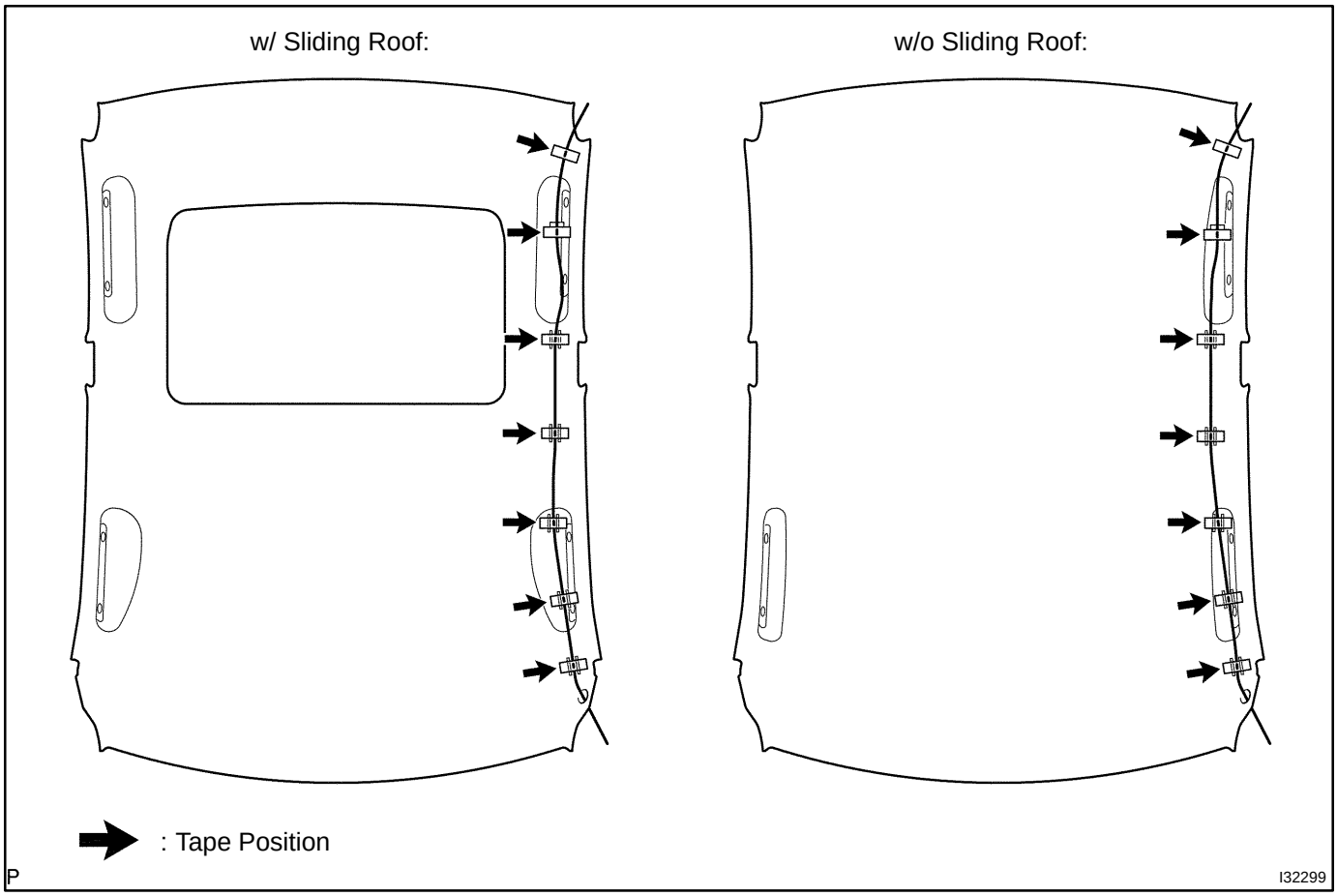

(b) Install the roof headlining assy (See page 76–21).

(c) Engage the 9 clamps at the front side of antenna cord.

(d) Connect the plug and connector at the rear side of antenna cord.

8. INSTALL REAR SEAT BACK ASSY (FIXED TYPE REAR SEAT)(See page 72–8)

9. INSTALL REAR SEAT BACK ASSY (SEPARATED TYPE REAR SEAT)(See page 72–6)

10. INSTALL BENCH TYPE REAR SEAT CUSHION ASSY(See page 72–6 or 72–8)

11. INSTALL INSTRUMENT PANEL SUB–ASSY UPPER(See page 71–10)

HINT:

Refer to the procedure until the step, ”INSTALL INSTRUMENT PANEL SUB–ASSY UPPER” of INSTRUMENT PANEL SUB–ASSY LOWER.

CIGARETTE LIGHTER ASSY

670E6–01

REPLACEMENT

HINT:

COMPONENTS: See page 67–1

1. REMOVE FLOOR SHIFT SHIFT LEVER KNOB SUB–ASSY (M/T TRANSAXLE)(See page 71–10)

2. REMOVE CONSOLE PANEL UPPER(See page 71–10)

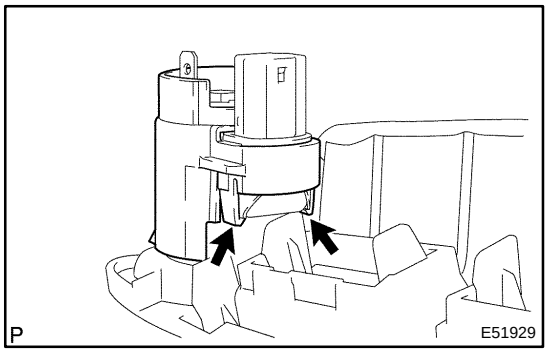

3. REMOVE CIGARETTE LIGHTER COVER

(a) Disengage the 2 claws and remove the cigarette lighter cover.

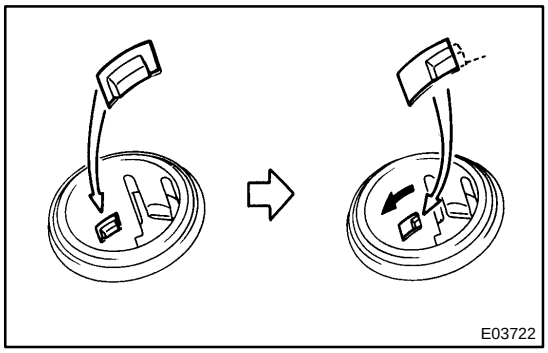

4. REMOVE CIGARETTE LIGHTER ASSY

(a) Turn the socket in the circumference direction as shown in the illustration, disengage the claw between the socket and the cigarette lighter bezel stay, and push out the socket to the room side.

(b) Align the socket with the notch on the cigarette lighter bezel stay, remove the cigarette lighter assy to the room side.

5. INSTALL CIGARETTE LIGHTER ASSY

(a) Align the socket with the notch on the cigarette lighter bezel stay, push the cigarette lighter assy into as hard as possible and install it.

AUDIO & VISUAL SYSTEM

670DZ–01

COMPONENTS

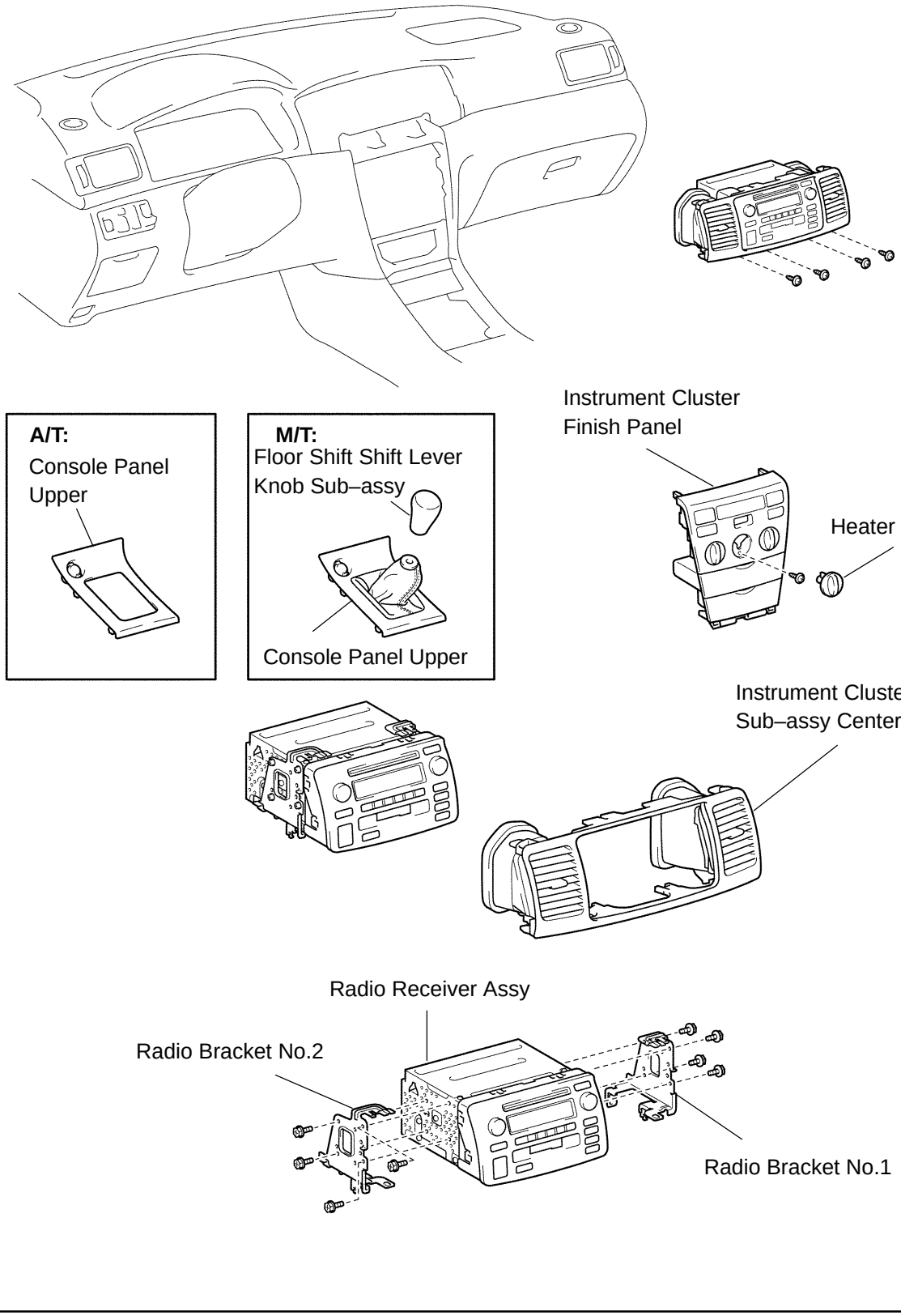

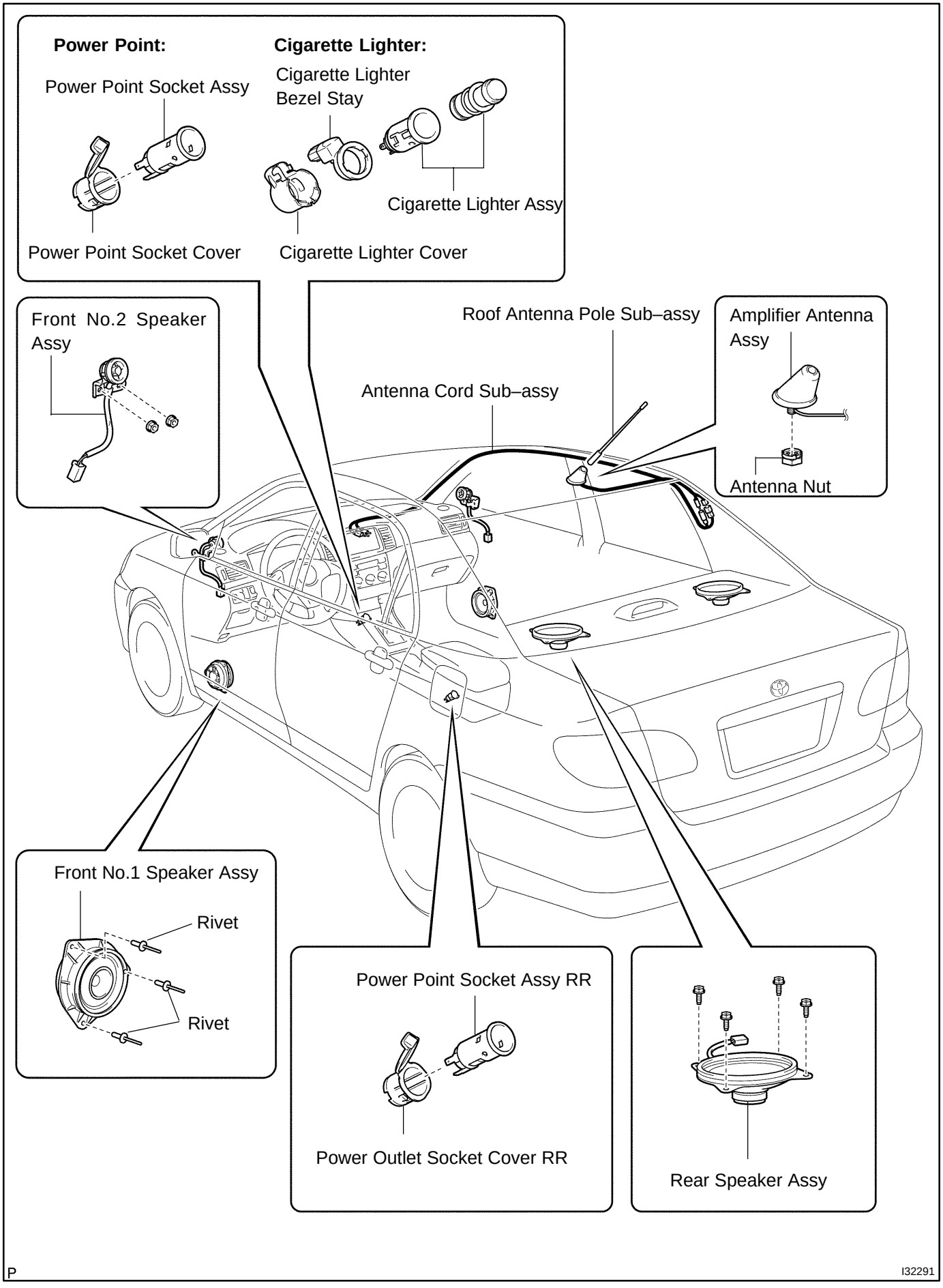
Power Point:
Power Point Socket Assy
Power Point Socket Cover
Cigarette Lighter:
Cigarette Lighter Bezel Stay
Cigarette Lighter Assy
Cigarette Lighter Cover
Front No.2 Speaker Assy
Roof Antenna Pole Sub–assy
Antenna Cord Sub–assy
Amplifier Antenna Assy
Antenna Nut
Front No.1 Speaker Assy
Rivet
Rivet
Power Point Socket Assy RR
Power Outlet Socket Cover RR
Rear Speaker Assy
P
I32291

FRONT NO.2 SPEAKER ASSY

670E1–01

REPLACEMENT

HINT:

COMPONENTS: See page 67–1

1. **REMOVE FRONT ARMREST ASSY LH(See page 75–7)**
2. **REMOVE POWER WINDOW REGULATOR MASTER SWITCH ASSY (W/ POWER WINDOW) (See page 75–7)**
3. **REMOVE FRONT ARMREST BASE PANEL UPPER LH (W/O POWER WINDOW) (See page 75–7)**
4. **REMOVE FRONT DOOR WINDOW REGULATOR HANDLE ASSY (W/O POWER WINDOW) (See page 75–7)**
5. **REMOVE FRONT DOOR LOWER FRAME BRACKET GARNISH LH(See page 75–7)**
6. **REMOVE FRONT DOOR TRIM BOARD SUB–ASSY LH(See page 75–7)**

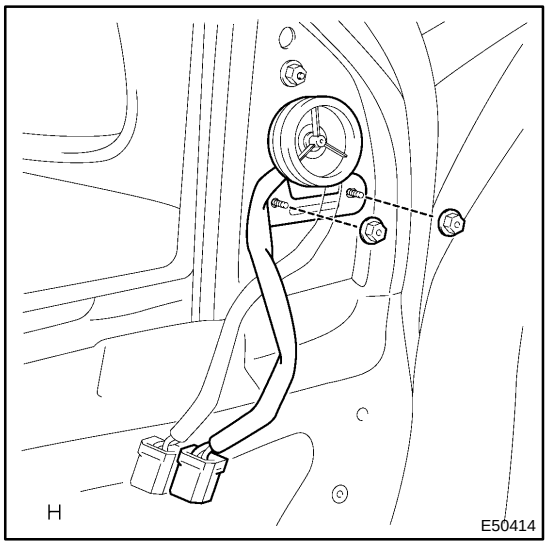

7. **REMOVE FRONT NO.2 SPEAKER ASSY**

(a) Open the part of service hole cover, then disconnect the connector.

(b) Remove the 2 nuts and front No. 2 speaker assy.

8. **INSTALL FRONT DOOR WINDOW REGULATOR HANDLE ASSY (W/O POWER WINDOW) (See page 75–7)**

FRONT NO.1 SPEAKER ASSY

670E0–01

REPLACEMENT

HINT:

COMPONENTS: See page 67–1

1. **REMOVE FRONT ARMREST ASSY LH(See page 75–7)**
2. **REMOVE POWER WINDOW REGULATOR MASTER SWITCH ASSY (W/ POWER WINDOW) (See page 75–7)**
3. **REMOVE FRONT ARMREST BASE PANEL UPPER LH (W/O POWER WINDOW) (See page 75–7)**
4. **REMOVE FRONT DOOR WINDOW REGULATOR HANDLE ASSY (W/O POWER WINDOW) (See page 75–7)**
5. **REMOVE FRONT DOOR LOWER FRAME BRACKET GARNISH LH(See page 75–7)**
6. **REMOVE FRONT DOOR TRIM BOARD SUB–ASSY LH(See page 75–7)**

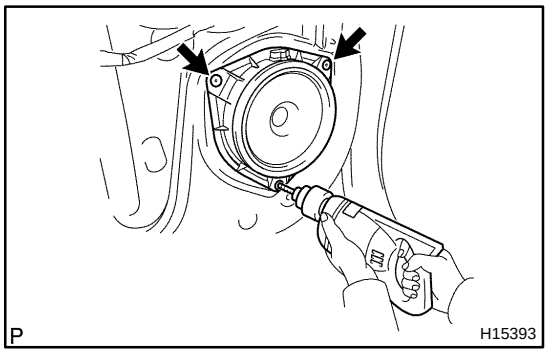

7. REMOVE FRONT NO.1 SPEAKER ASSY

(a) Disconnect the connector.

(b) Using a rivet cutter and air drill, drill out the rivets and remove the front No.1 speaker assy.

NOTICE:

- **Prizing the hole with a drill can lead to damage to the rivet hole or breaking the drill.**
- **Take care as the cut rivet is hot.**

HINT:

Even if flange is taken off, continue drilling and push out remaining fragments will the drill.

(c) Using a vacuum cleaner, remove the drilled rivet and their dust from the inside of the door.

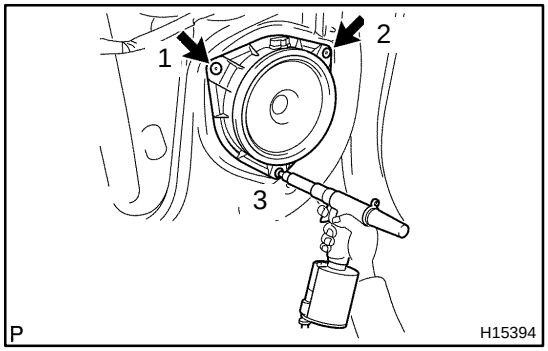

8. INSTALL FRONT NO.1 SPEAKER ASSY

(a) Using an air riveter and nose piece No.1, strike rivets into the door panel to install the front No.1 speaker assy to the door panel.

NOTICE:

Install them in the order shown in the illustration.

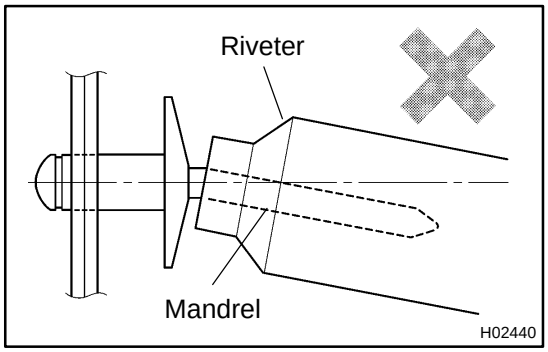

NOTICE:

- **Do not prize a riveter, as riveter is damaged, it is not tightened and the mandrel is bent.**

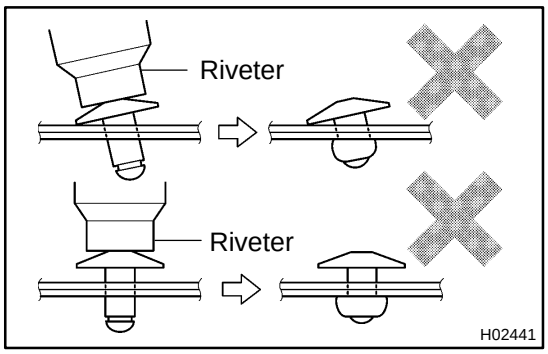

- **Do not tilt the riveter and disconnect the rivet from the material while handling a riveter, as the materials are not tightened firmly.**

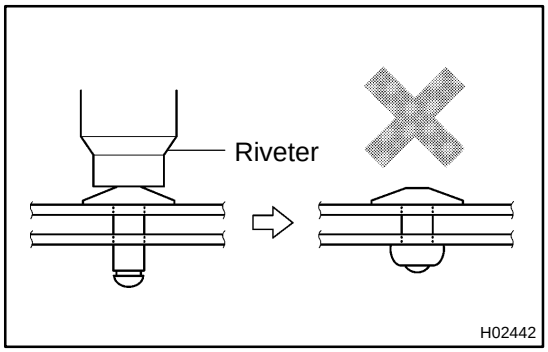

- **Install the rivet while attaching materials, as they are not tightened firmily.**

(b) Connect the connector.

9. INSTALL FRONT DOOR WINDOW REGULATOR HANDLE ASSY (W/O POWER WINDOW) (See page 75–7)

POWER POINT SOCKET ASSY RR

670E8–01

REPLACEMENT

HINT:

COMPONENTS: See page 67–1

1. **REMOVE PARKING BRAKE HOLE COVER SUB–ASSY(See page 71–10)**
2. **REMOVE FLOOR SHIFT SHIFT LEVER KNOB SUB–ASSY (M/T TRANSAXLE)(See page 71–10)**
3. **REMOVE CONSOLE PANEL UPPER(See page 71–10)**
4. **REMOVE CONSOLE BOX CARPET**
5. **REMOVE CONSOLE BOX SUB–ASSY REAR (M/T TRANSAXLE)(See page 71–10)**
6. **REMOVE CONSOLE BOX SUB–ASSY REAR (A/T TRANSAXLE)(See page 71–10)**

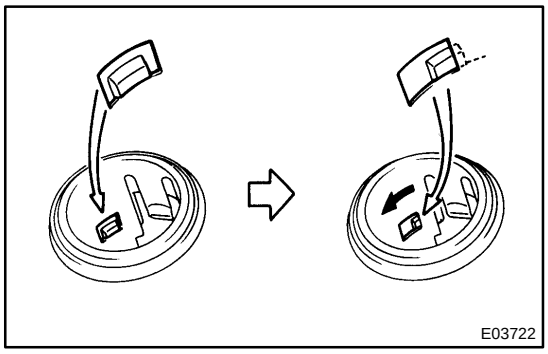

7. **REMOVE POWER POINT SOCKET ASSY RR**

(a) Turn the socket in the circumference direction as shown the illustration, disengage the claw between the socket and the power outlet socket cover RR, and push out the socket to the room side.

(b) Align the socket with the notch on the power outlet socket cover RR, remove the power point socket assy RR to the room side.

8. **INSTALL POWER POINT SOCKET ASSY RR**

(a) Align the socket with the notch on the power outlet socket cover RR, push the power point socket assy RR into as hard as possible and install it.

POWER POINT SOCKET ASSY

REPLACEMENT

670E7–01

HINT:

COMPONENTS: See page 67–1

1. REMOVE FLOOR SHIFT SHIFT LEVER KNOB SUB–ASSY (M/T TRANSAXLE)(See page 71–10)

2. REMOVE CONSOLE PANEL UPPER(See page 71–10)

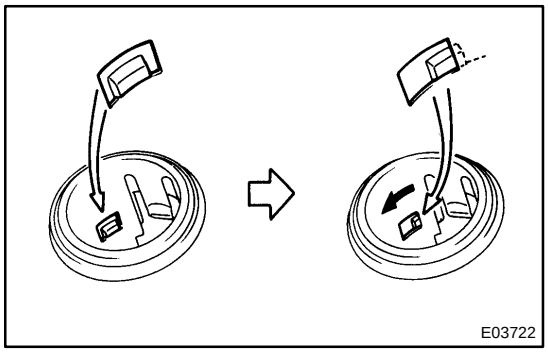

3. REMOVE POWER POINT SOCKET ASSY

(a) Turn the socket in the circumference direction as shown the illustration, disengage the claw between the socket and the power point socket cover, and push out the socket to the room side.

(b) Align the socket with the notch on the power point socket cover, remove the power point socket assy to the room side.

4. INSTALL POWER POINT SOCKET ASSY

(a) Align the socket with the notch on the power point socket cover, push the power point socket assy into as hard as possible and install it.

RADIO RECEIVER ASSY

670DY–01

REPLACEMENT

HINT:

COMPONENTS: See page 67–1

1. **REMOVE FLOOR SHIFT SHIFT LEVER KNOB SUB–ASSY (M/T TRANSAXLE)(See page 71–10)**
2. **REMOVE CONSOLE PANEL UPPER(See page 71–10)**
3. **REMOVE HEATER CONTROL KNOB(See page 71–10)**
4. **REMOVE INSTRUMENT CLUSTER FINISH PANEL(See page 71–10)**

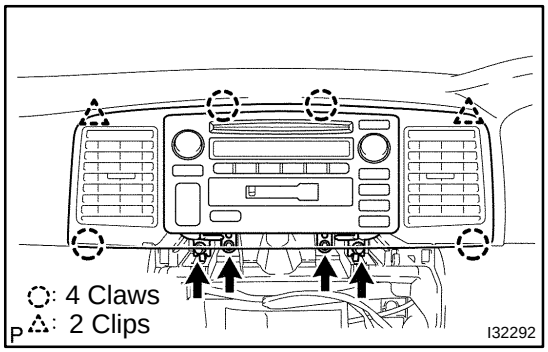

5. **REMOVE INSTRUMENT CLUSTER FINISH PANEL SUB–ASSY CENTER**

(a) Remove the 4 screws.

(b) Using a screwdriver, disengage the 2 clips and 4 claws, then remove the instrument cluster finish panel sub–assy center with radio receiver assy.

HINT:

Tape the screwdriver tip before use.

(c) Disconnect the connectors.

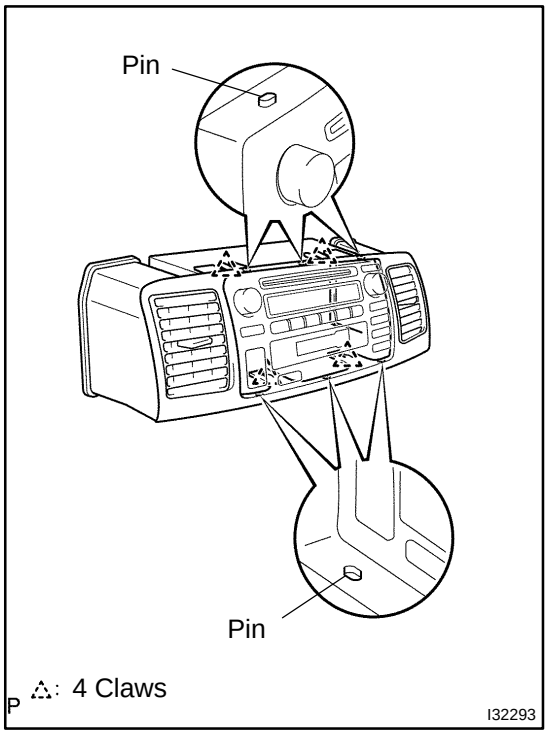

6. **REMOVE RADIO RECEIVER ASSY**

(a) Disengage the 4 claws and 6 pins.

(b) Remove the radio receiver assy from the instrument cluster finish panel sub–assy center.

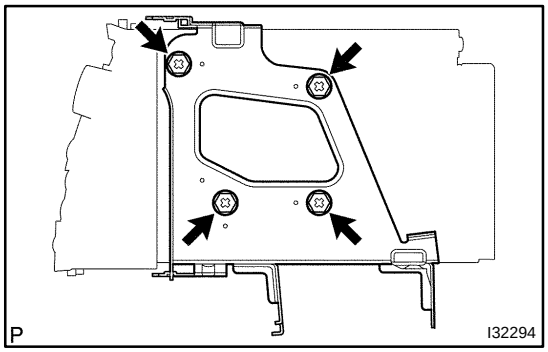

7. **REMOVE RADIO BRACKET NO.1**

(a) Remove the 4 screws and radio bracket No. 1.

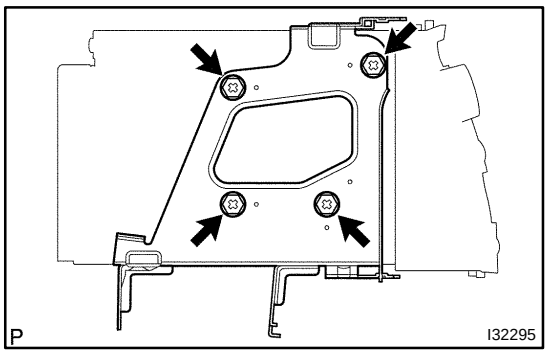

8. REMOVE RADIO BRACKET NO.2

(a) Remove the 4 screws and radio bracket No. 2.

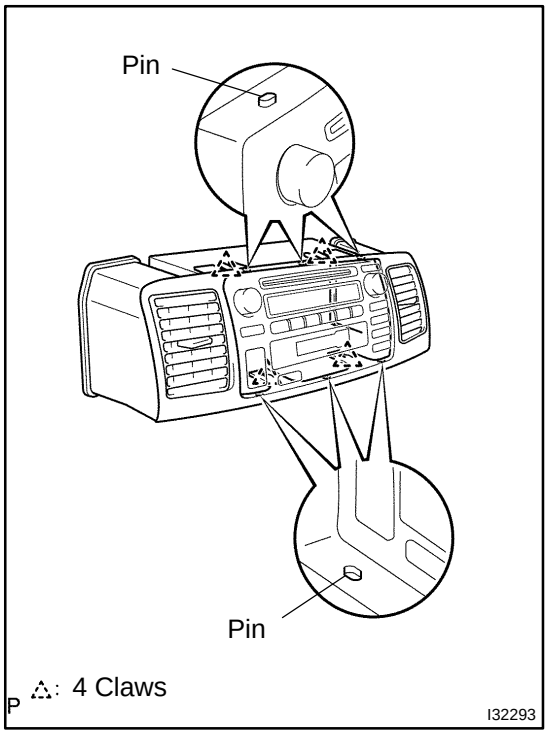

9. INSTALL INSTRUMENT CLUSTER FINISH PANEL SUB–ASSY CENTER

(a) Place the radio receiver assy temporarily on the instrument panel sub–assy upper. (*1)

(b) Under the condition of (*1), engage the 6 pins and 4 claws of the radio receiver assy with the instrument cluster finish panel sub–assy center. (*2)

(c) Under the condition of (*2), slide the instrument cluster finish panel sub–assy center and the radio receiver assy forward of the vehicle.

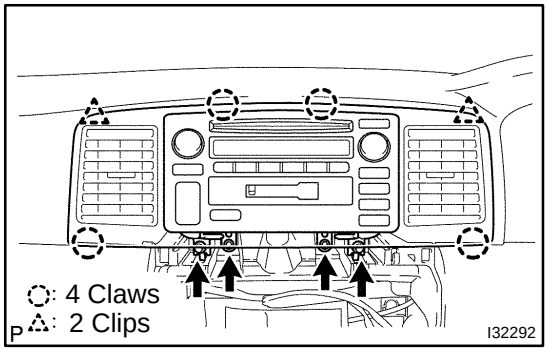

(d) Connect the connectors and install the 2 clips and 4 claws.

(e) Install the 4 screws and instrument cluster finish panel sub–assy center with radio receiver assy.

REAR SPEAKER ASSY

670E2–01

REPLACEMENT

HINT:

COMPONENTS: See page 67–1

1. **REMOVE REAR DOOR OPENING TRIM RH**
2. **REMOVE REAR DOOR OPENING TRIM LH**
3. **REMOVE BENCH TYPE REAR SEAT CUSHION ASSY(See page 72–6 or 72–8)**
4. **REMOVE REAR SEAT BACK ASSY (FIXED TYPE REAR SEAT)(See page 72–8)**
5. **REMOVE REAR SEAT BACK ASSY (SEPARATED TYPE REAR SEAT)(See page 72–6)**
6. **REMOVE REAR SEAT SIDE GARNISH RH (FIXED TYPE REAR SEAT)(See page 76–21)**
7. **REMOVE REAR SEAT SIDE GARNISH LH (FIXED TYPE REAR SEAT)(See page 76–21)**
8. **REMOVE ROOM PARTITION BOARD LH (SEPARATED TYPE REAR SEAT)(See page 76–21)**
9. **REMOVE ROOM PARTITION BOARD RH (SEPARATED TYPE REAR SEAT)(See page 76–21)**
10. **REMOVE ROOF SIDE GARNISH INNER RH(See page 76–21)**
11. **REMOVE ROOF SIDE GARNISH INNER LH(See page 76–21)**
12. **REMOVE PACKAGE TRAY TRIM PANEL ASSY(See page 76–21)**

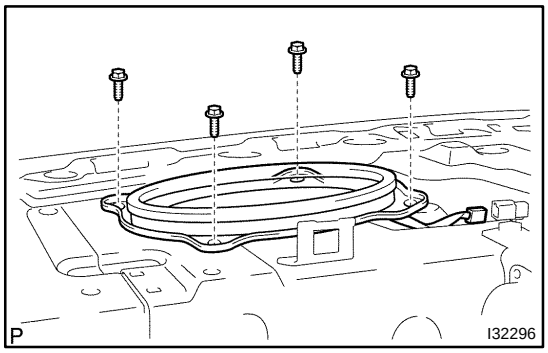

13. **REMOVE REAR SPEAKER ASSY**
(a) Disconnect the connector.
(b) Remove the 4 screws and rear speaker assy.

14. **INSTALL REAR SEAT BACK ASSY (FIXED TYPE REAR SEAT)(See page 72–8)**
15. **INSTALL REAR SEAT BACK ASSY (SEPARATED TYPE REAR SEAT)(See page 72–6)**
16. **INSTALL BENCH TYPE REAR SEAT CUSHION ASSY(See page 72–6 or 72–8)**

ROOF ANTENNA POLE SUB–ASSY

670E5–01

REPLACEMENT

HINT:

COMPONENTS: See page 67–1

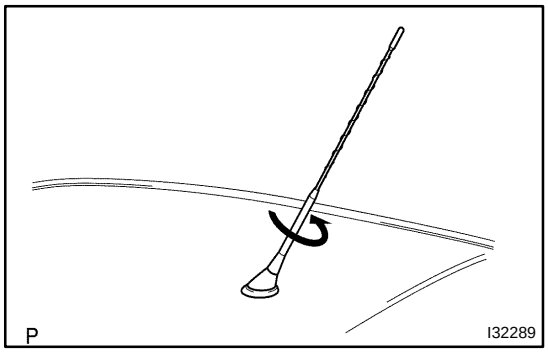

1. REMOVE ROOF ANTENNA POLE SUB–ASSY

(a) Remove the roof antenna pole by turning it in the arrow direction in the illustration.

POWER SOURCE

LOCATION

68036–01

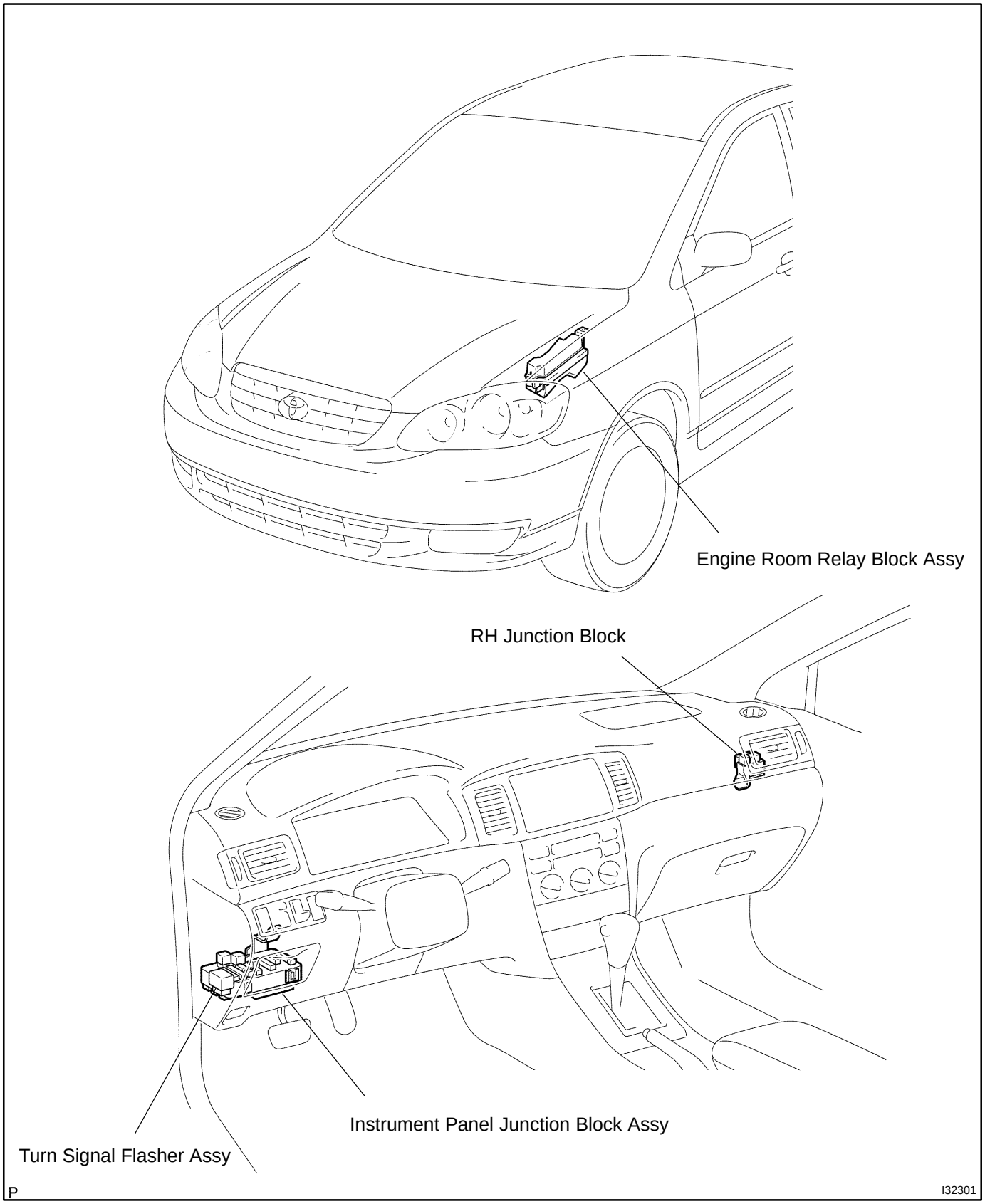

Engine Room Relay Block Assy

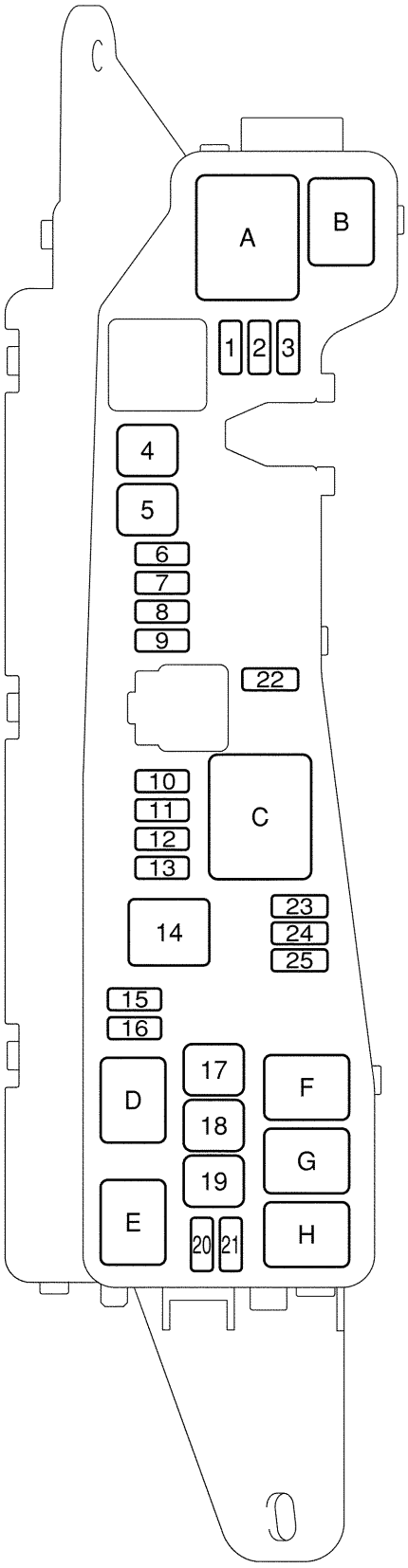

FUSE

1, –	
2, HEAD RH LWR	10 A
3, HEAD LH LWR	10 A
4, –	
5, HEAD MAIN	40 A
6, ALT–S	5 A
7, EFI	15 A
8, HAZARD	10 A
9, HORN	10 A
10, DOME	15 A
11, MAIN	30 A
12, –	
13, –	
14, ALT	100 A
15, HEAD RH UPR	10 A
16, HEAD LH UPR	10 A
17, ABS No. 2	40 A
18, RDI FAN	30 A
19, ABS No. 1	30 A
20, FOG	15 A
21, –	
22, –	
23, SPARE	10 A
24, SPARE	15 A
25, SPARE	30 A

RELAY

A, HEAD	E, FOG
B, M/G CLT	F, HORN
C, DIMMER	G, FAN No. 2
D, EFI	H, FAN No. 1

P

I32288

Instrument Panel Junction Block Assy

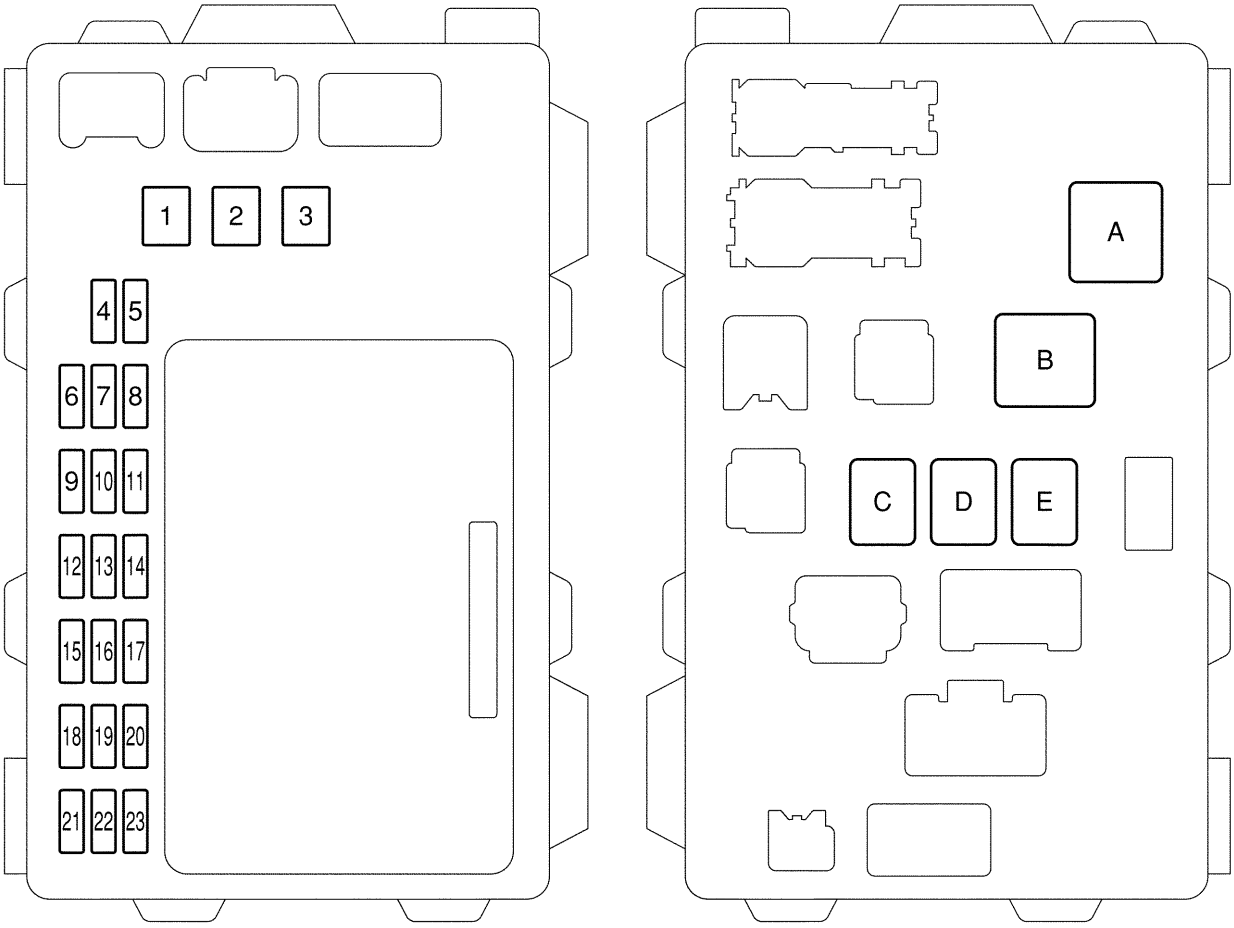

FUSE

1, HEATER	40 A	13, –	
2, DEFOG	40 A	14, CIG	15 A
3, POWER	30 A	15, –	
4, A/C	10 A	16, AM1	25 A
5, M–HTR/DEF I–UP	10 A	17, ECU–B	10 A
6, AM2	15 A	18, OBD	7.5 A
7, RR WIPER	15 A	19, DOOR	25 A
8, WASHER	15 A	20, P/POINT	15 A
9, WIPER	25 A	21, TAIL	15 A
10, ECU–IG	10 A	22, STOP	15 A
11, GAUGE	10 A	23, –	
12, –			

RELAY

A, ST
B, DEF
C, C/OPN
D, P/W
E, IG 1

P

I32302

RH Junction Block

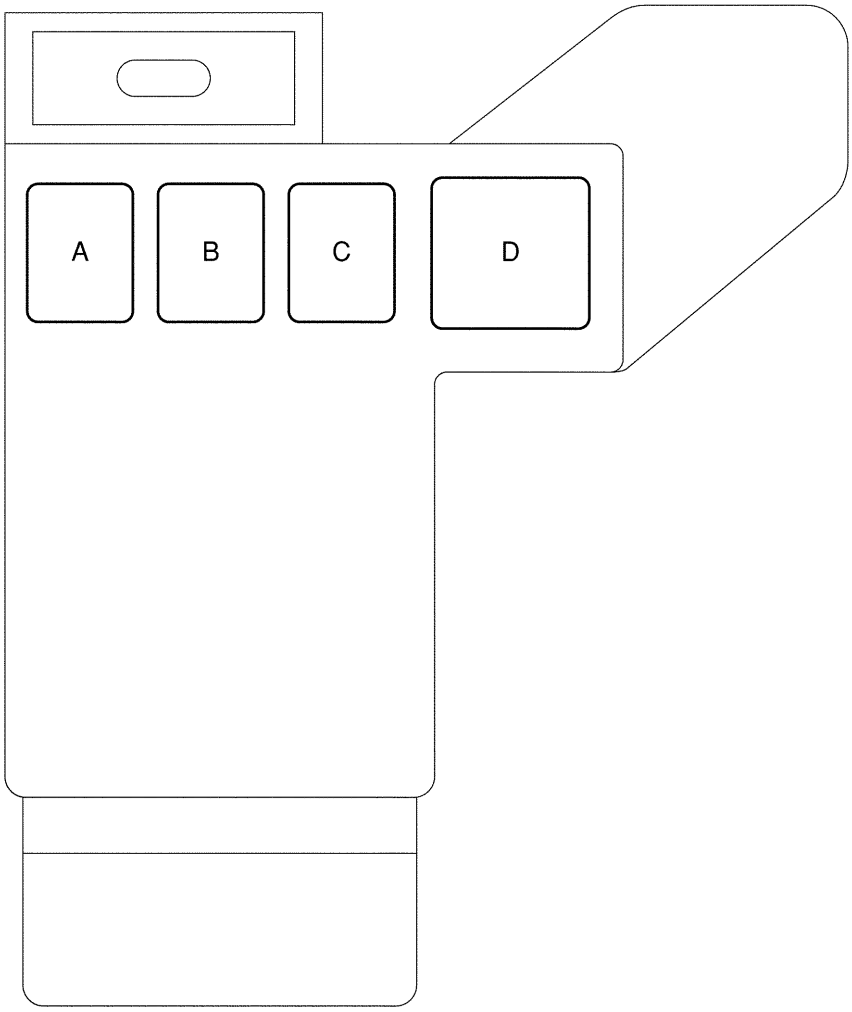

RELAY

A, –
B, TAIL
C, P–POINT
D, HTR

P

I32570

69046–01

INSPECTION

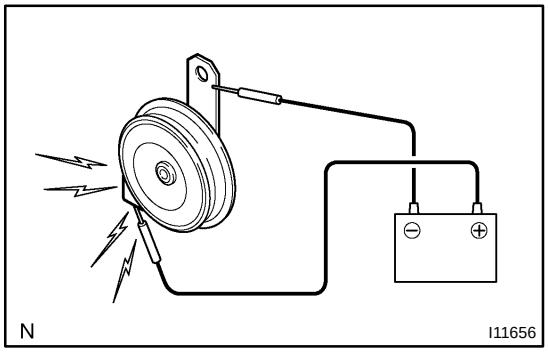

1. INSPECT LOW PITCHED HORN ASSY

(a) Connect the positive (+) lead from the battery to the terminal and the negative (–) lead to the horn body, and check that the horn blows.

If the result is not as specified, replace the horn.

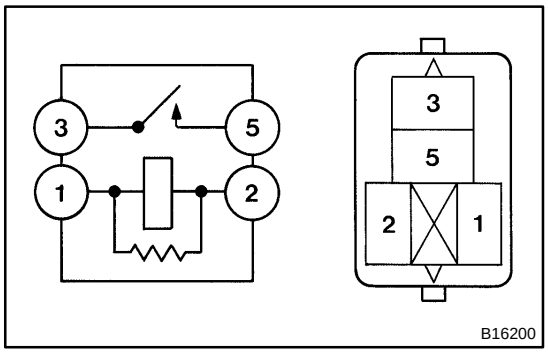

2. INSPECT HORN RELAY ASSY (Marking: HORN)

(a) Remove the horn relay from the engine room J/B.

(b) Inspect the horn relay continuity.

Standard:

Terminal No.	Condition	Specified condition
1 ⇔ 2	Constant	Continuity
3 ⇔ 5	Apply B+ between terminals 1 and 2	

If the result is not as specified, replace the relay.

HORN SYSTEM

69044–01

LOCATION

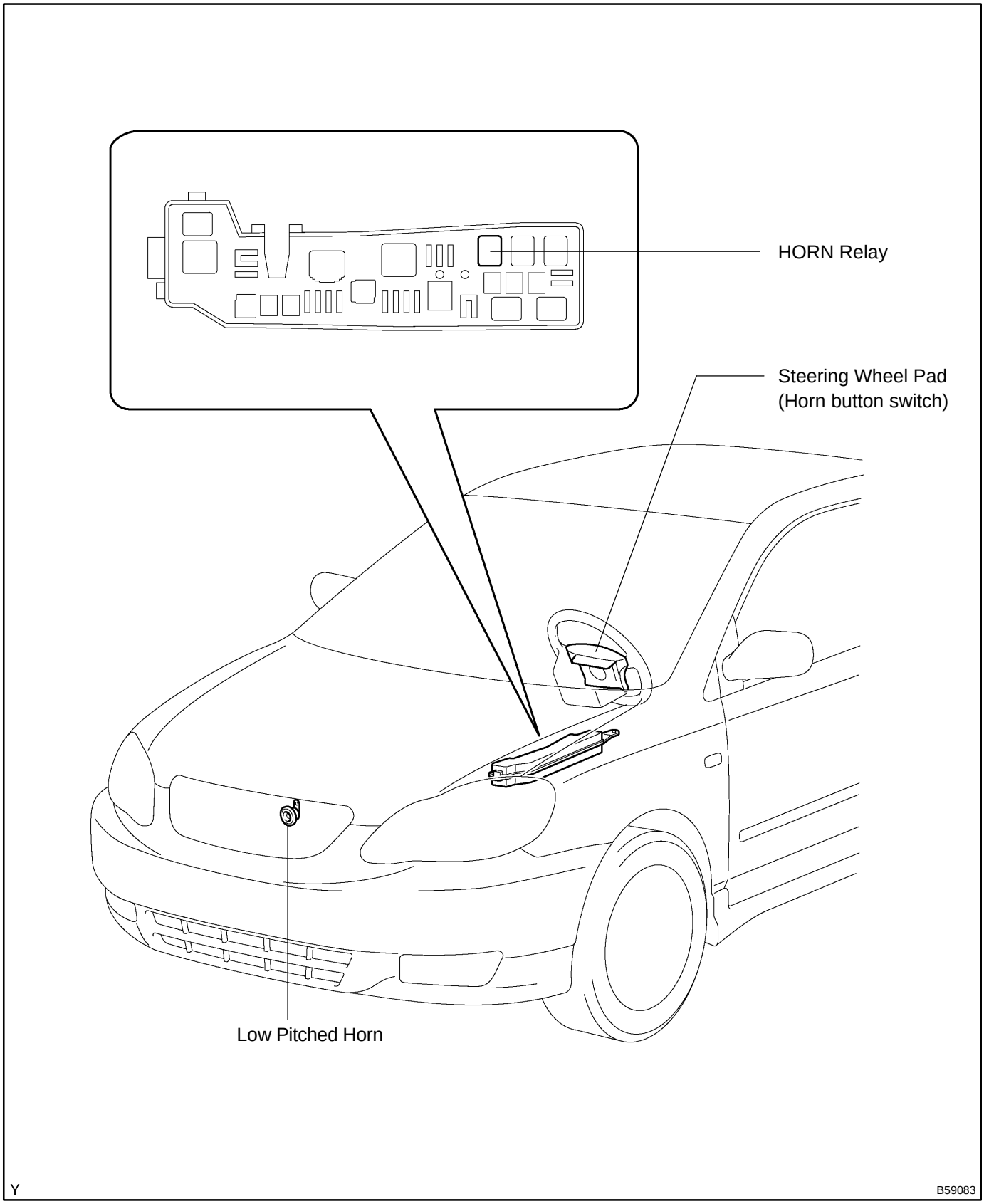

69045–01

PROBLEM SYMPTOMS TABLE

Symptom	Suspected Area	See page
Horn does not sound	2. Horn button switch	–
	3. Low pitched horn	69–3
	4. HORN relay	69–3
	5. Wire harness	–

BACK WINDOW GLASS

COMPONENTS

700GP–02

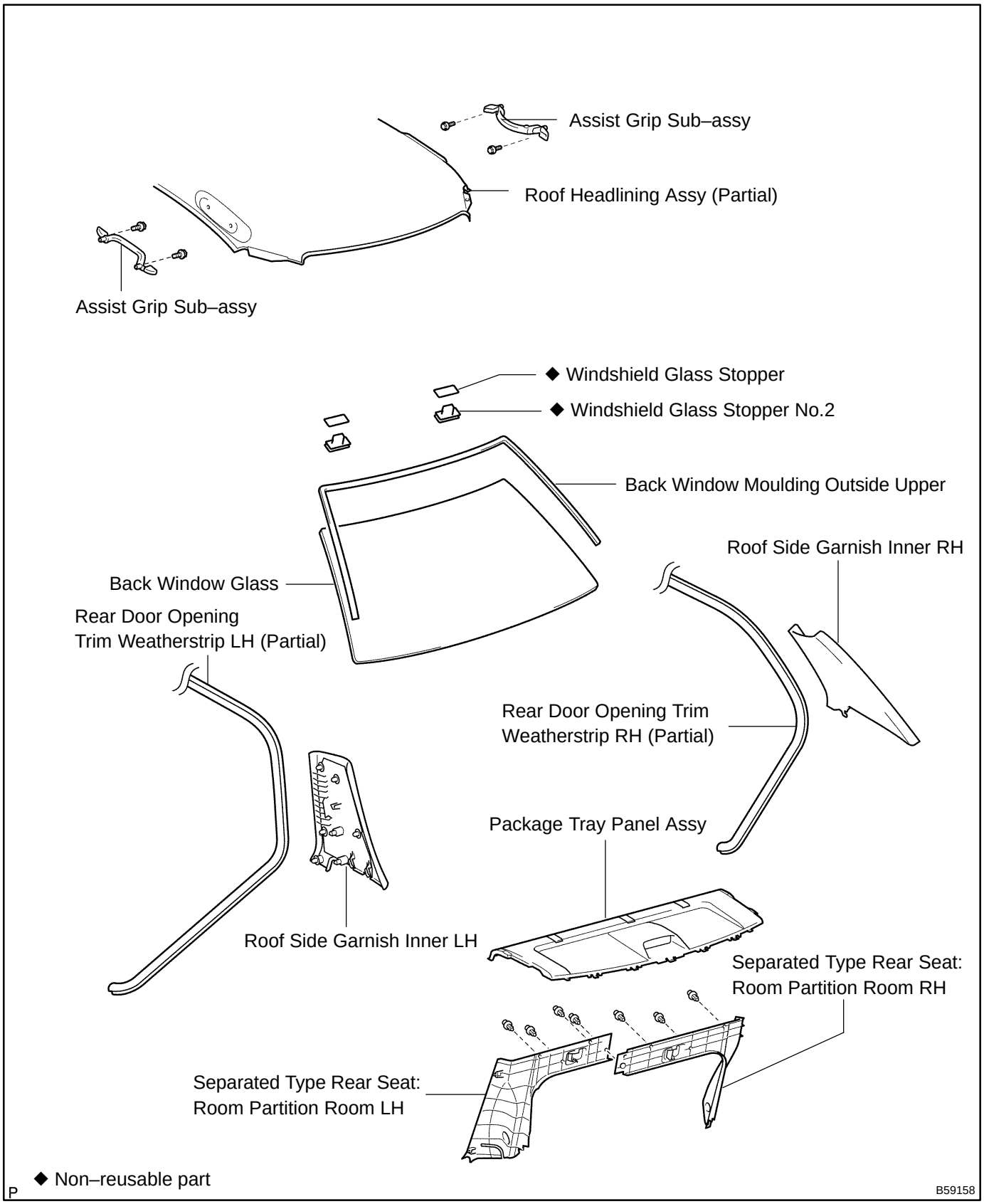

700GQ–01

REPLACEMENT

HINT:

Installation is according to the reverse order of the removal.

1. **REMOVE REAR DOOR WEATHERSTRIP RH (See page 76–21)**
2. **REMOVE REAR DOOR WEATHERSTRIP LH (See page 76–21)**
3. **REMOVE REAR SEAT CUSHION ASSY (See page 72–6, 72–8)**
4. **REMOVE REAR SEAT BACK ASSY (FIXED TYPE REAR SEAT) (See page 72–8)**
5. **REMOVE SEPARATE TYPE REAR SEAT BACK ASSY (SEPARATED TYPE REAR SEAT) (See page 72–6)**
6. **REMOVE SEPARATE TYPE REAR SEAT BACK ASSY (SEPARATED TYPE REAR SEAT) (See page 72–6)**
7. **REMOVE ROOM PARTITION BOARD RH (SEPARATED TYPE REAR SEAT)**
8. **REMOVE ROOM PARTITION BOARD LH (SEPARATED TYPE REAR SEAT)**
9. **REMOVE ROOF SIDE GARNISH INNER RH (See page 76–21)**
10. **REMOVE ROOF SIDE GARNISH INNER LH (See page 76–21)**
11. **REMOVE PACKAGE TRAY TRIM PANEL ASSY (See page 61–15)**

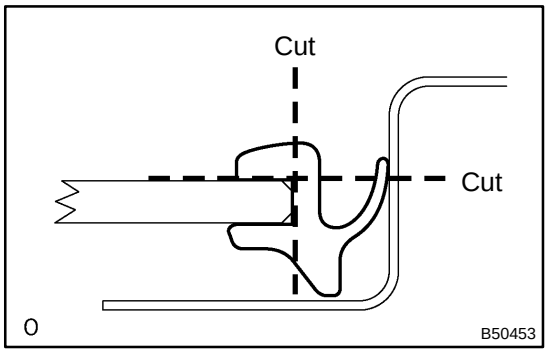

12. REMOVE BACK WINDOW MOULDING OUTSIDE UPPER

(a) Using a knife, cut off the moulding as shown in the illustration.

NOTICE:

Do not damage the body with the knife.

(b) Remove the remaining moulding.

HINT:

When removing, make a cut partly, pull and remove it by hand.

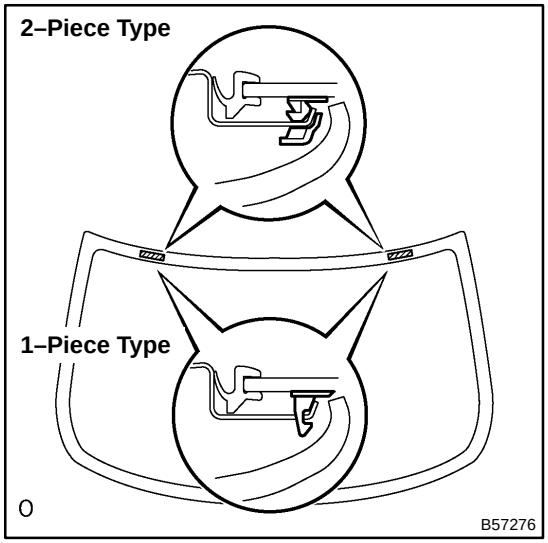

13. REMOVE BACK WINDOW GLASS

HINT:

Depending on a vehicle type, either a 1–piece type or a 2–piece type of stopper is installed.

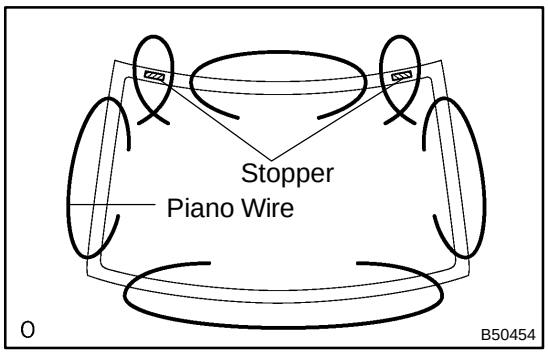

(a) Push a piano wire through between the body and glass from the interior.
(b) Apply protective tape to the outer surface to keep the surface from being scratched.
(c) Tie both wire ends to wooden blocks or similar objects.

NOTICE:

- **When separating the glass, take care not to damage the paint and interior/exterior ornaments.**
- **To prevent the piano wire to be cut, do not cross it.**

(d) Cut the adhesive by pulling the piano wire around it.
(e) Using a suction rubber, remove the glass.

NOTICE:

Leave as much adhesive on the body as possible when cutting off the glass.

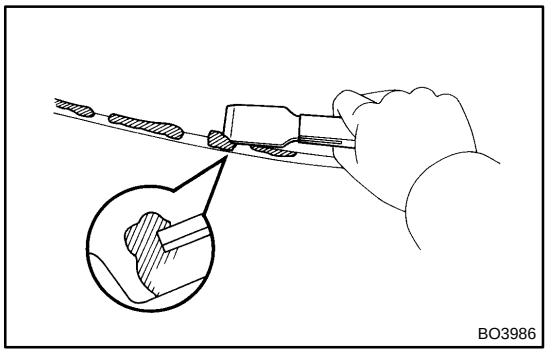

14. CLEAN BACK WINDOW GLASS

(a) Using a scraper, remove the damaged stoppers, dam and adhesive sticking to the glass.
(b) Clean the outer circumference of the glass with white gasoline.

NOTICE:

- **Do not touch the glass after cleaning it.**
- **Be careful not to damage the body.**

15. INSTALL BACK WINDOW GLASS STOPPER NO.1

(a) Install 2 new back window glass stoppers No.1 to the body.

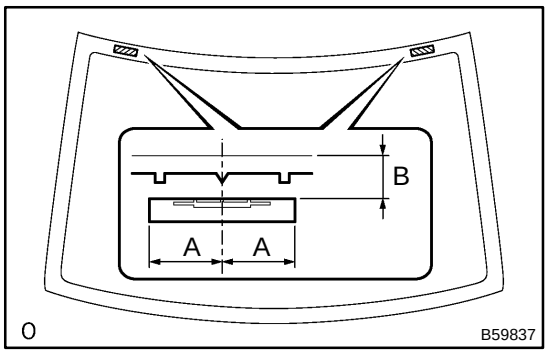

16. INSTALL BACK WINDW GLASS STOPPER NO.2

(a) Coat the installation part of the stopper with Primer G.

NOTICE:

- **Dry the primer coating for 3 minutes or more.**
- **Do not apply too much primer.**

(b) Install 2 new back window glass stoppers No.2 onto the glass as shown in the illustration.
A: 40.0 mm (1.575 in.)
B: 11.3 mm (0.445 in.)

17. INSTALL BACK WINDOW GLASS ADHESIVE DAM

(a) Coat the installation part of the window glass adhesive dam with Primer G.

NOTICE:

- **Dry the primer coating for 3 minutes or more.**
- **Do not apply too much primer.**

(b) Install a new window glass adhesive dam as shown in the illustration.
A: 25.0 mm (0.984 in.)
B: 9.0 mm (0.354 in.)

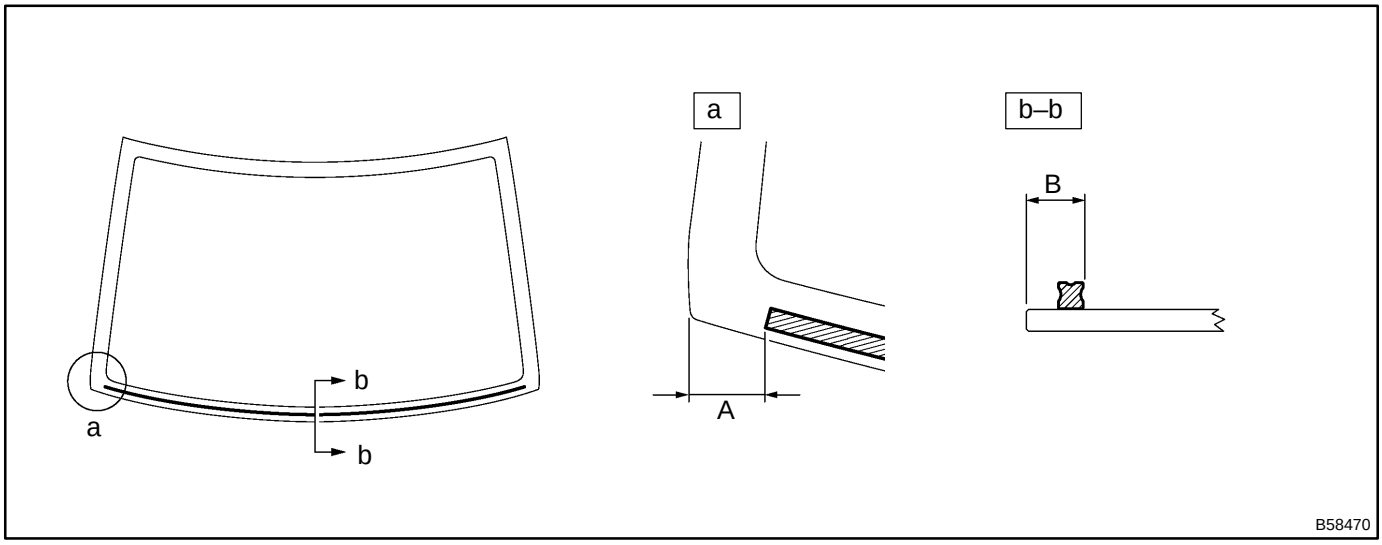

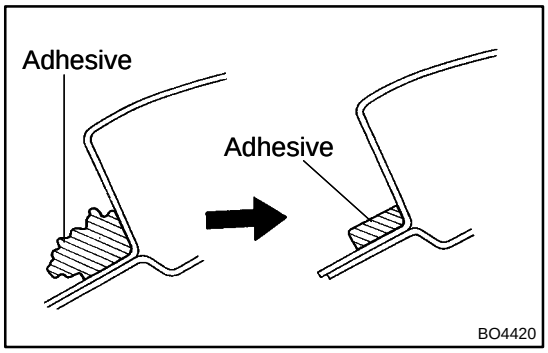

18. INSTALL BACK WINDOW GLASS

(a) Clean and shape the contact surface of the vehicle's body
(1) Using a knife, cut away any rough areas of the body.

HINT:
Leave as much adhesive on the body as possible.

(2) Clean the cut surface of the adhesive with a piece of shop rag saturated in cleaner.

(b) Position the glass.
(1) Using a suction rubber, place the glass in the correct position.
(2) Check that all the contacting parts of the glass rim are perfectly even.
(3) Place reference marks between the glass and body.

NOTICE:
Check that the stoppers are attached to the body correctly.

HINT:
When reusing the glass, check and correct the reference mark's positions.

(4) Remove the glass.

(c) Coat the contact surface of the body panel with Primer M.
(1) Using a brush, coat the exposed part of the contact surface on the vehicle side with Primer M.

NOTICE:
- **Dry the primer coating for 3 minutes or more.**
- **Do not apply too much primer.**

(d) Coat the contact surface of the glass with Primer G.
(1) Using a brush or sponge, coat the edge of the glass and the contact surface with Primer G.

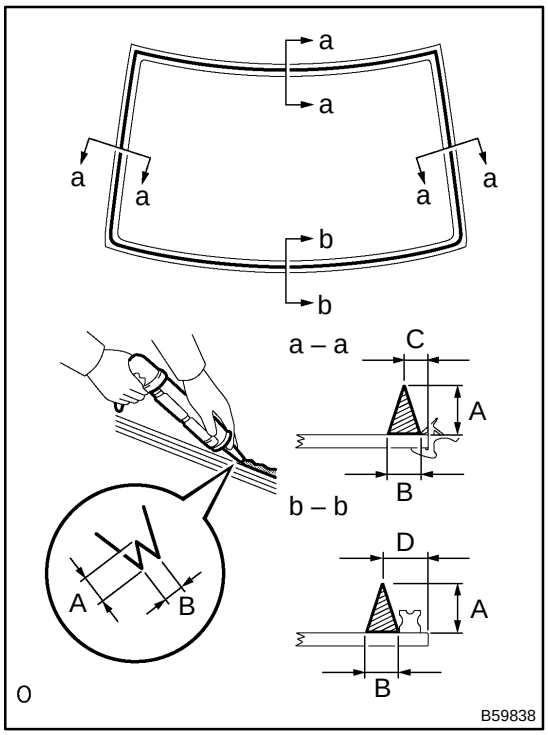

NOTICE:

- **Dry the primer coating for 3 minutes or more.**
- **Do not apply too much primer.**

(e) Apply adhesive.

(1) Cut off the tip of the cartridge nozzle as shown in the illustration.

Part No. 08850–00801 or equivalent

HINT:

After cutting off the tip, use all adhesive within the time described in the table below.

Temperature	Tackfree time
35°C (95°F)	15 minutes
20°C (68°F)	100 minutes
5°C (41°F)	8 hours

(2) Load the sealer gun with the cartridge.

(3) Coat the glass with adhesive as shown in the illustration.

A: 12.5 mm (0.492 in.) or more

B: 8 mm (0.32 in.) or more

C: 6.5 mm (0.256 in.)

D: 13 mm (0.51 in.)

(f) Install the glass.

(1) Using a suction rubber, position the glass so that the reference marks are aligned, and press it in gently along the rim.

NOTICE:

- **Dry the primer coating for 3 minutes or more.**
- **Check that the stoppers are attached to the body correctly.**
- **Check the clearance between the body and glass.**

(2) Lightly press the glass front surface for close contact.

(3) Using a scraper, remove any excess or protruding adhesive.

HINT:

Apply adhesive on the glass rim.

19. INSTALL BACK WINDOW MOULDING OUTSIDE UPPER

(a) Install a new back window moulding to the back window glass before the adhesive has hardened.

(b) Hold the back window glass in place securely with protective tape or equivalent until the adhesive has completely hardened.

(c) Using a scraper, remove any excess or protruding adhesive before the adhesive has hardened.

NOTICE:

Take care not to drive the vehicle during the time described in the table below.

Temperature	Tackfree time
35°C (95°F)	1.5 hours
20°C (68°F)	5 hours
5°C (41°F)	24 hours

20. INSPECT FOR LEAK AND REPAIR

(a) Conduct a leak test after the adhesive has completely hardened.

(b) Seal any leak with sealant.

21. INSTALL REAR SEAT BACK ASSY (FIXED TYPE REAR SEAT) (See page 72–8)

22. INSTALL SEPARATE TYPE REAR SEAT BACK ASSY (SEPARATED TYPE REAR SEAT) (See page 72–6)

23. INSTALL SEPARATE TYPE REAR SEAT BACK ASSY (SEPARATED TYPE REAR SEAT) (See page 72–6)

OUTER REAR VIEW MIRROR ASSY LH

700GZ–01

REPLACEMENT

HINT:

- Installation is according to the reverse order of the removal.
- In the RH side, work in the same procedure as in the LH side.

1. REMOVE FRONT ARMREST ASSY LH (See page 75–7)

2. REMOVE POWER WINDOW REGULATOR MASTER SWITCH ASSY (W/ POWER WINDOW) (See page 75–7)

3. REMOVE FRONT ARMREST BASE PANEL UPPER LH (W/O POWER WINDOW) (See page 75–7)

4. REMOVE FRONT DOOR WINDOW REGULATOR HANDLE ASSY (W/O POWER WINDOW) (See page 75–7)

5. REMOVE FRONT DOOR LOWER FRAME BRACKET GARNISH LH (See page 75–7)

6. REMOVE FRONT DOOR TRIM BOARD SUB–ASSY LH (See page 75–7)

7. REMOVE OUTER REAR VIEW MIRROR ASSY LH

(a) Remove the 3 nuts and the rear view mirror assembly LH, and then disconnect the connector.

8. INSTALL OUTER REAR VIEW MIRROR ASSY LH
Torque: 8.0 N·m (81 kgf·cm, 71 in.·lbf)

700GV–01

INSPECTION

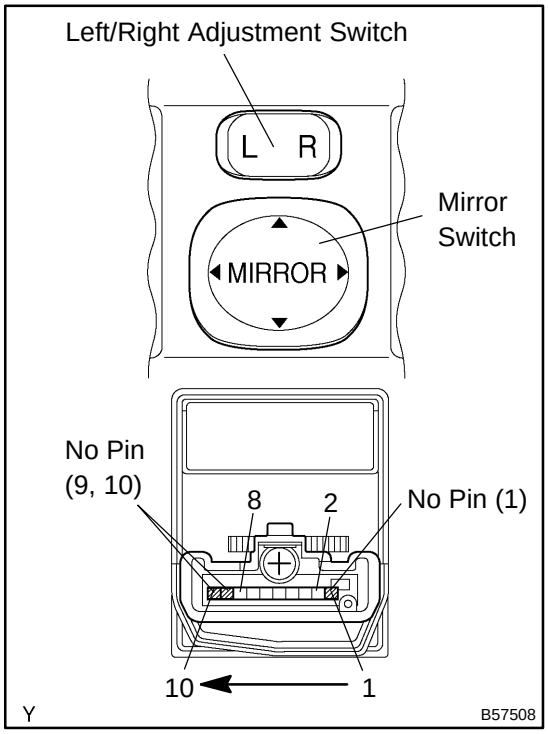

1. INSPECT OUTER MIRROR SWITCH ASSY

(a) Inspect the mirror switch continuity.

(1) Left side for left/right adjustment switch: Inspect the mirror switch continuity.

Standard (Left side):

Terminal No.	Switch position	Specified condition
–	OFF	No continuity
4 ⇔ 8 6 ⇔ 7	UP	Continuity
4 ⇔ 7 6 ⇔ 8	DOWN	Continuity
5 ⇔ 8 6 ⇔ 7	LEFT	Continuity
5 ⇔ 7 6 ⇔ 8	RIGHT	Continuity

If the result is not as specified, replace the switch assembly.

(2) Right side for left/right adjustment switch: Inspect the mirror switch continuity.

Standard (Right side):

Terminal No.	Switch position	Specified condition
–	OFF	No continuity
3 ⇔ 8 6 ⇔ 7	UP	Continuity
3 ⇔ 7 6 ⇔ 8	DOWN	Continuity
2 ⇔ 8 6 ⇔ 7	LEFT	Continuity
2 ⇔ 7 6 ⇔ 8	RIGHT	Continuity

If the result is not as specified, replace the switch assembly.

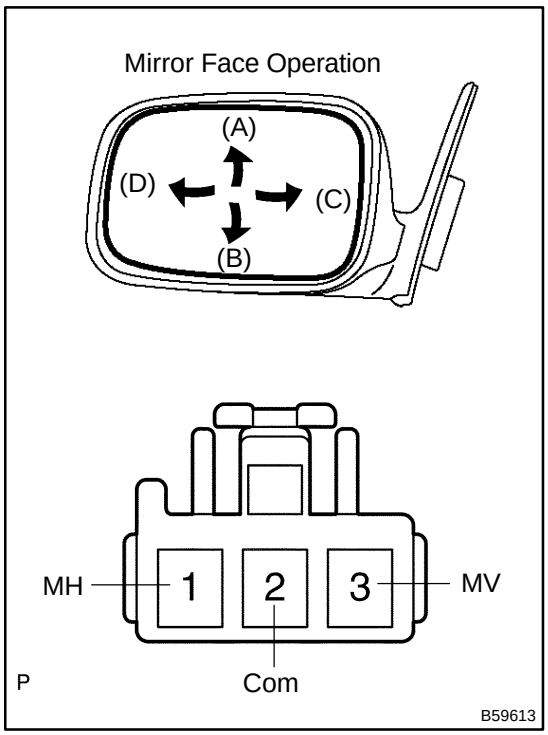

2. INSPECT OUTER REAR VIEW MIRROR ASSY LH

(a) Disconnect the outer rear view mirror assembly LH connector.

(b) Inspect the mirror motor operation.

(1) Apply battery voltage as shown in the table.

Standard:

Battery connection	Mirror operation
Positive (+) ⇔ MV (3) Negative (–) ⇔ Com (2)	Turn upward (A)
Positive (+) ⇔ Com (2) Negative (–) ⇔ MV (3)	Turn downward (B)
Positive (+) ⇔ Com (2) Negative (–) ⇔ MH (1)	Turn left (C)
Positive (+) ⇔ MH (1) Negative (–) ⇔ Com (2)	Turn right (D)

If the result is not as specified, replace the mirror assembly.

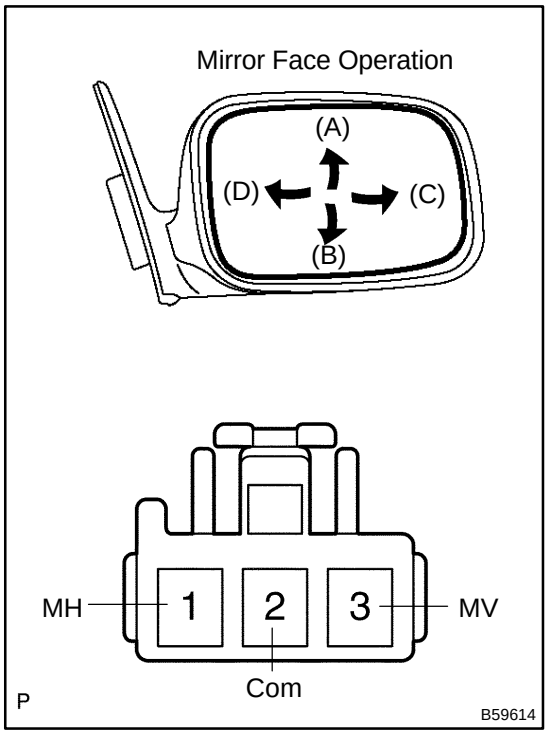

3. INSPECT OUTER REAR VIEW MIRROR ASSY RH

(a) Disconnect the outer rear view mirror assembly RH connector.

(b) Inspect the mirror motor operation.

(1) Apply battery voltage as shown in the table.

Standard:

Battery connection	Mirror operation
Positive (+) ⇔ MV (3) Negative (–) ⇔ Com (2)	Turn upward (A)
Positive (+) ⇔ Com (2) Negative (–) ⇔ MV (3)	Turn downward (B)
Positive (+) ⇔ Com (2) Negative (–) ⇔ MH (1)	Turn right (D)
Positive (+) ⇔ MH (1) Negative (–) ⇔ Com (2)	Turn left (C)

If the result is not as specified, replace the mirror assembly.

POWER MIRROR CONTROL SYSTEM

700GU–01

LOCATION

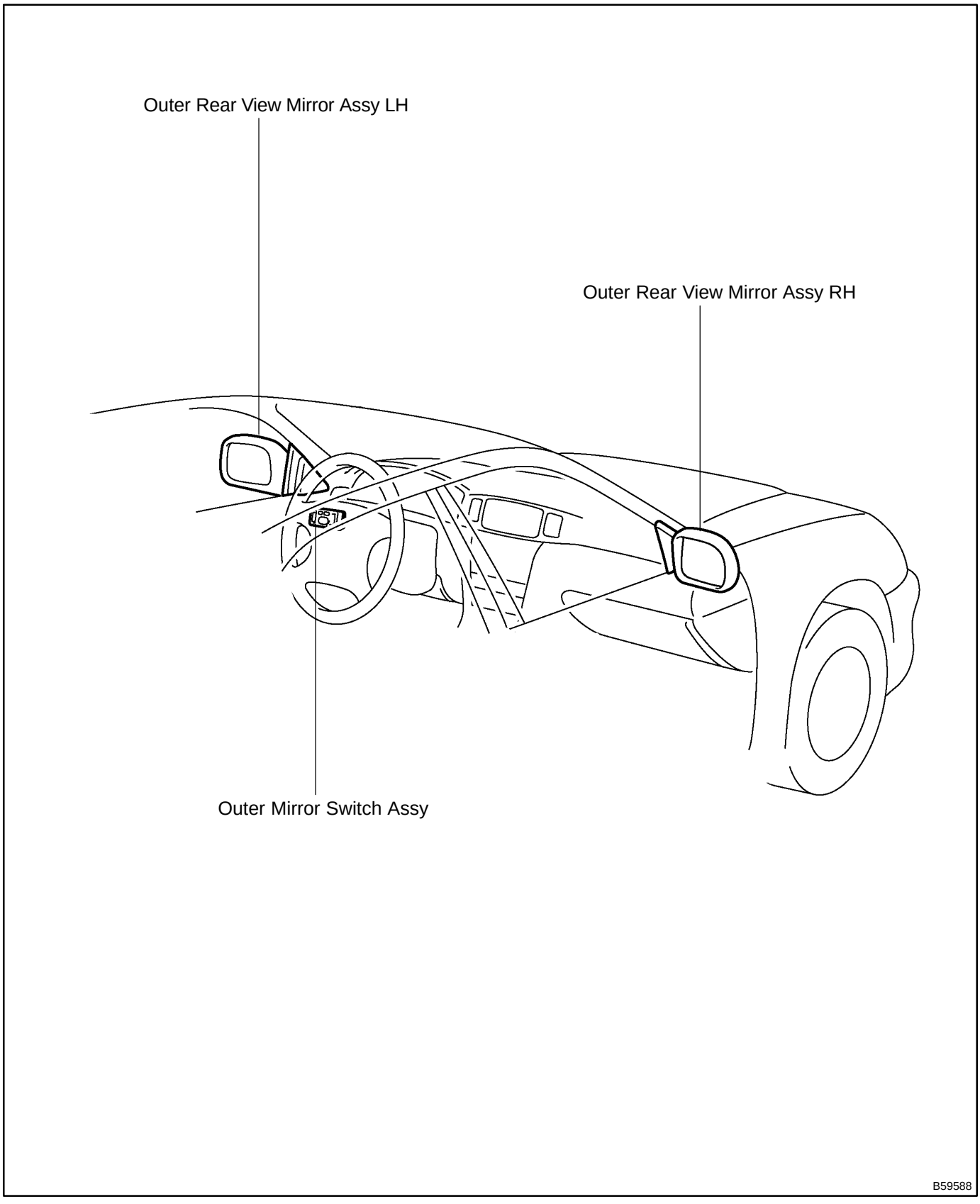

700GM–01

INSPECTION

1. POWER WINDOW SYSTEM CIRCUIT

System Drawing

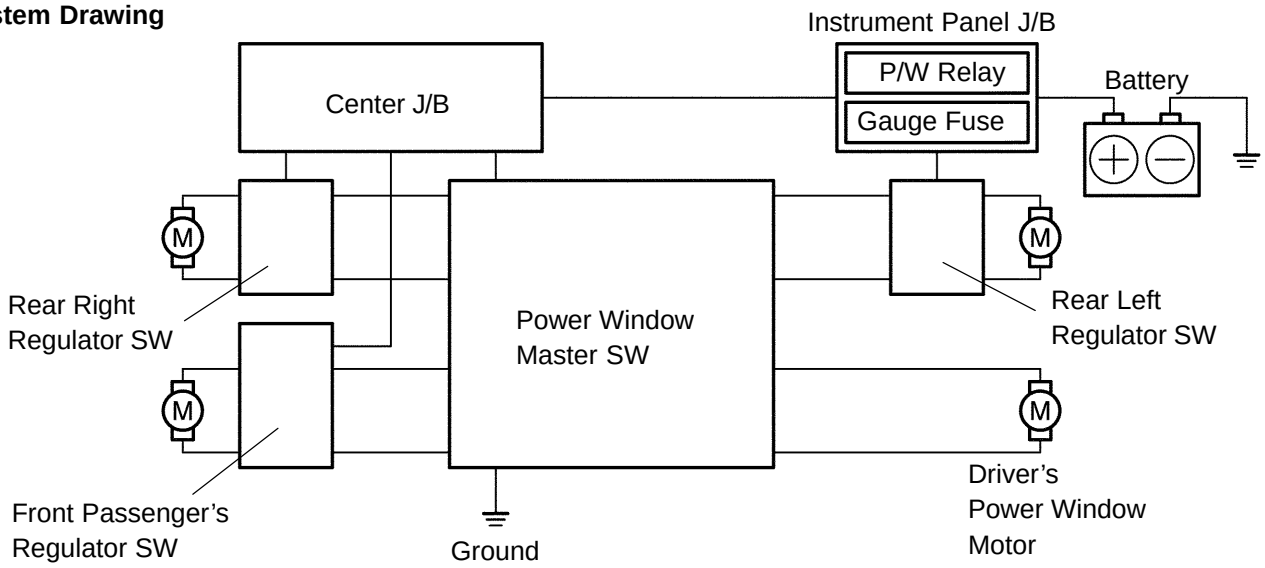

Power Window Master SW Connector
(Wire Harness Side)

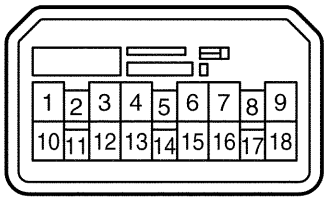

Power Window Regulator SW Connector
(Wire Harness Side)

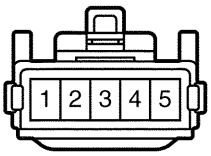

Switch Inner Circuit

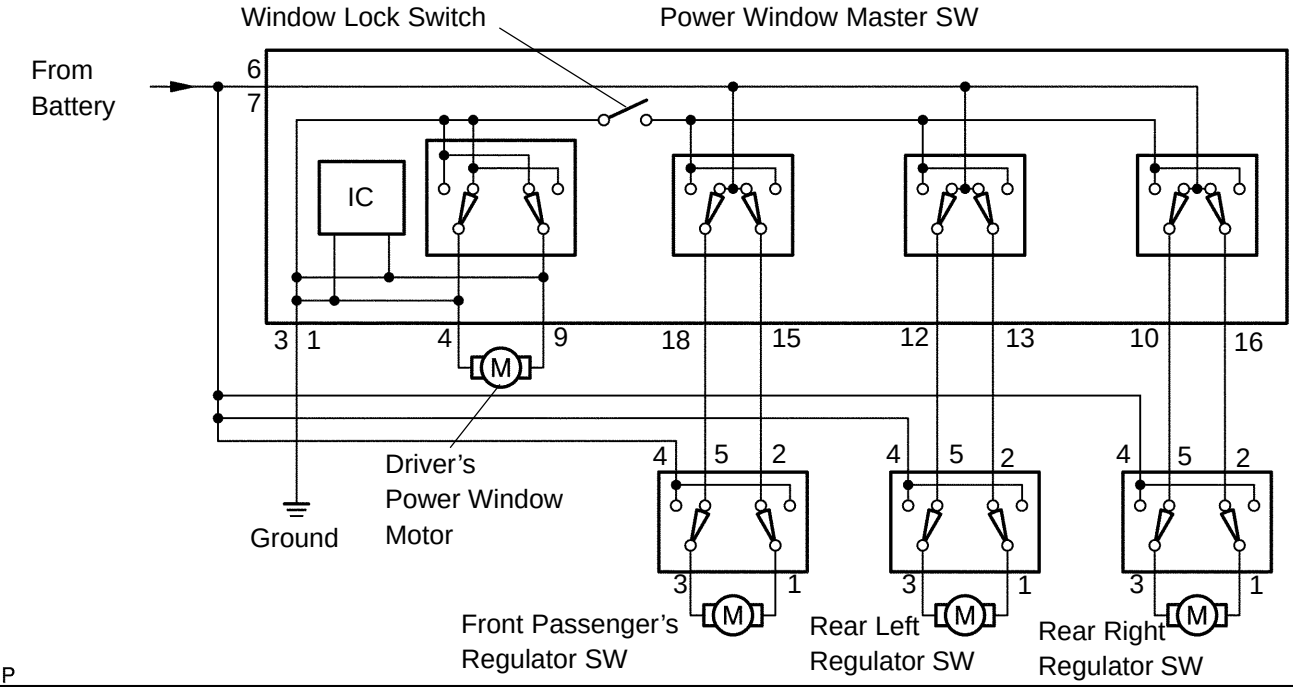

P

B59862

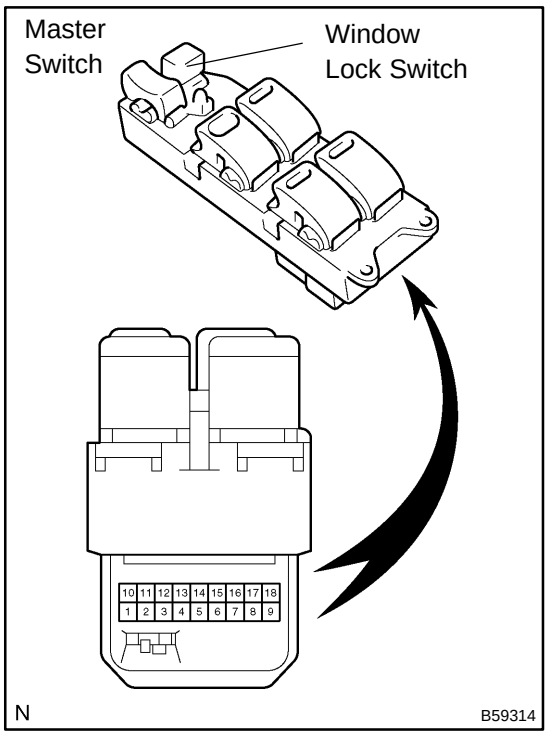

2. INSPECT POWER WINDOW REGULATOR MASTER SWITCH ASSY

(a) Inspect the master switch continuity.

[Driver's switch (Window unlock and lock)]

Standard:

Switch position	Symbols (Terminal No.)	Specified condition
UP	DU (4) ⇔ B (6) ⇔ B (7)	Continuity
	E (1) ⇔ E (3) ⇔ DD (9)	
OFF	E (1) ⇔ E (3) ⇔ DU (4)	Continuity
	E (1) ⇔ E (3) ⇔ DD (9)	
DOWN	E (1) ⇔ E (3) ⇔ DU (4)	Continuity
	B (6) ⇔ B (7) ⇔ DD (9)	
AUTO DOWN	E (1) ⇔ E (3) ⇔ DU (4)	Continuity
	B (6) ⇔ B (7) ⇔ DD (9)	

[Front passenger's switch (Window unlock)]

Standard:

Switch position	Symbols (Terminal No.)	Specified condition
UP	E (1) ⇔ E (3) ⇔ PD (15)	Continuity
	B (6) ⇔ B (7) ⇔ PU (18)	
OFF	E (1) ⇔ E (3) ⇔ PD (15)	Continuity
	E (1) ⇔ E (3) ⇔ PU (18)	
DOWN	E (1) ⇔ E (3) ⇔ PU (18)	Continuity
	B (6) ⇔ B (7) ⇔ PD (15)	

[Front passenger's switch (Window lock)]

Standard:

Switch position	Symbols (Terminal No.)	Specified condition
UP	B (6) ⇔ B (7) ⇔ PU (18)	Continuity
OFF	PD (15) ⇔ PU (18)	Continuity
DOWN	B (6) ⇔ B (7) ⇔ PD (15)	Continuity

[Rear left switch (Window unlock)]

Standard:

Switch position	Symbols (Terminal No.)	Specified condition
UP	E (1) ⇔ E (3) ⇔ RLD (13)	Continuity
	B (6) ⇔ B (7) ⇔ RLU (12)	
OFF	E (1) ⇔ E (3) ⇔ RLD (13)	Continuity
	E (1) ⇔ E (3) ⇔ RLU (12)	
DOWN	E (1) ⇔ E (3) ⇔ RLU (12)	Continuity
	B (6) ⇔ B (7) ⇔ RLD (13)	

[Rear left switch (Window lock)]

Standard:

Switch position	Symbols (Terminal No.)	Specified condition
UP	B (6) ⇔ B (7) ⇔ RLU (12)	Continuity
OFF	RLU (12) ⇔ RLD (13)	Continuity
DOWN	B (6) ⇔ B (7) ⇔ RLD (13)	Continuity

[Rear right switch (Window unlock)]
Standard:

Switch position	Symbols (Terminal No.)	Specified condition
UP	B (6) ⇔ B (7) ⇔ RRU (10)	Continuity
	E (1) ⇔ E (3) ⇔ RRD (16)	
OFF	E (1) ⇔ E (3) ⇔ RRU (10)	Continuity
	E (1) ⇔ E (3) ⇔ RRD (16)	
DOWN	E (1) ⇔ E (3) ⇔ RRU (10)	Continuity
	B (6) ⇔ B (7) ⇔ RRD (16)	

[Rear right switch (Window lock)]
Standard:

Switch position	Symbols (Terminal No.)	Specified condition
UP	B (6) ⇔ B (7) ⇔ RRU (10)	Continuity
OFF	RRU (10) ⇔ RRD (16)	Continuity
DOWN	B (6) ⇔ B (7) ⇔ RRD (16)	Continuity

If the result is not as specified, replace the master switch.

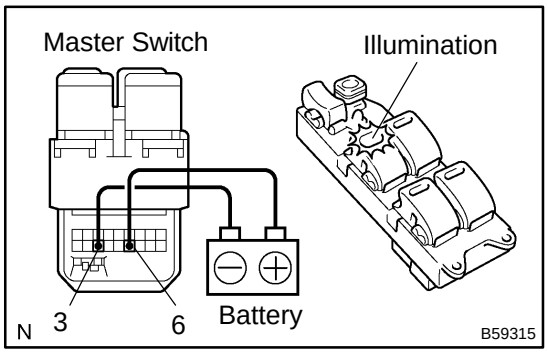

(b) Inspect the master switch illumination.
Standard:

Measuring condition	Specified condition
Battery positive (+) Terminal – 6 Battery negative (–) Terminal – 3	Switch illumination lights up

If the result is not as specified, replace the master switch.

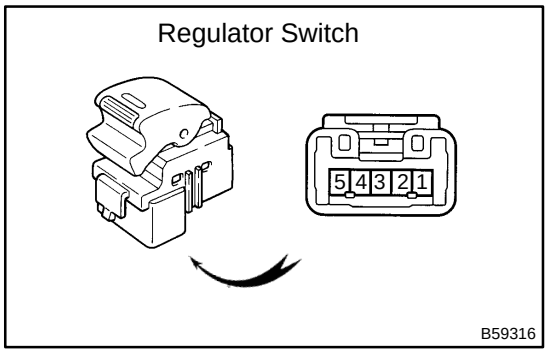

3. INSPECT POWER WINDOW REGULATOR SWITCH ASSY

HINT:
All the regulator switches (front passenger's, rear left, rear right) should be inspected in the same procedure.

(a) Inspect the regulator switch continuity.
Standard:

Switch position	Symbols (Terminal No.)	Specified condition
UP	D (1) ⇔ SD (2)	Continuity
	U (3) ⇔ B (4)	
OFF	D (1) ⇔ SD (2)	Continuity
	U (3) ⇔ SU (5)	
DOWN	D (1) ⇔ B (4)	Continuity
	U (3) ⇔ SU (5)	

If the result is not as specified, replace the regulator switch.

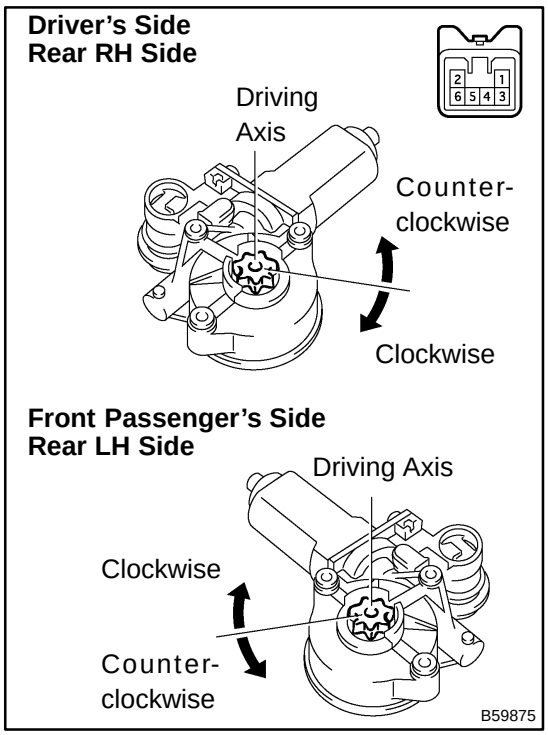

4. INSPECT POWER WINDOW REGULATOR MOTOR

(a) Inspect the regulator motor operation.

HINT:

- Driver's side and rear RH regulator motors should be inspected in the same procedure.
- Passenger's side and rear LH regulator motors should be inspected in the same procedure.

(1) Check that the motor operates smoothly when the battery positive voltage is applied to each terminal of the connector.

Standard [Driver's side and rear RH side]:

Measuring condition	Operational direction
Battery positive (+) Terminal – 4 Battery negative (–) Terminal – 5	Clockwise toward driving axis
Battery positive (+) Terminal – 5 Battery negative (–) Terminal – 4	Counterclockwise toward driving axis

Standard [Front passenger's side and rear LH side]:

Measuring condition	Operational direction
Battery positive (+) Terminal – 5 Battery negative (–) Terminal – 4	Clockwise toward driving axis
Battery positive (+) Terminal – 4 Battery negative (–) Terminal – 5	Counterclockwise toward driving axis

If the result is not as specified, replace the motor.

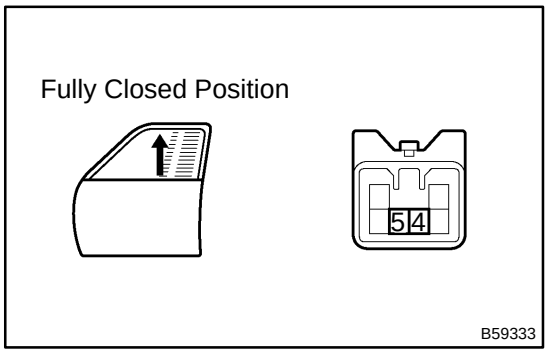

(b) Inspect the PTC operation inside the regulator motor.

NOTICE:

The inspection should be performed with the power window regulator and door glass installed to the vehicle.

(1) Set a DC 400 A probe of the TOYOTA electrical tester in the wire harness of terminal 4 or 5.

NOTICE:

Match the arrow mark of the probe with the current direction.

(2) Set the door glass in the fully closed position.

(3) When 60 seconds have elapsed after the door glass is fully closed, check how long it takes for the current to change from approximately 16 – 34 A into 1 A or less when the power window switch is turned UP once again.

Standard: Approximately 4 – 90 seconds

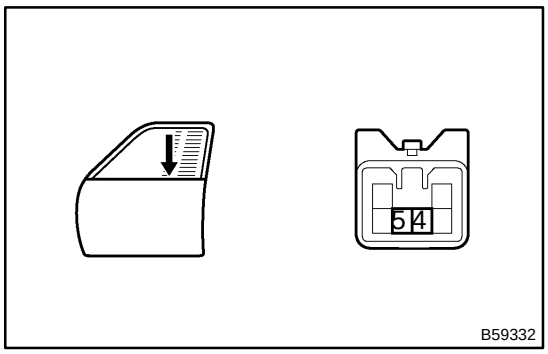

(4) When approximately 60 seconds have elapsed after the inspection of the current cut–off, check that the door glass goes down when the power window regulator switch is turned DOWN.

If the result is not as specified, replace the motor.

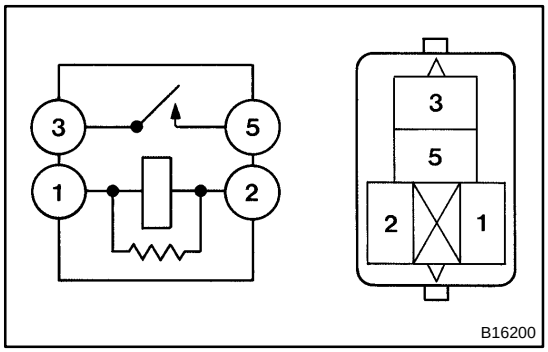

5. INSPECT RELAY (Making: P/W)

(a) Remove the power window relay from the instrument panel J/B.

(b) Inspect the power window relay.

Condition	Terminal No.	Specified condition
Constant	1 ⇔ 2	Continuity
Apply B+ between Terminals 1 and 2	3 ⇔ 5	Continuity

If the result is not as specified, replace the relay.

700GK–01

ON–VEHICLE INSPECTION

1. CHECK BASIC FUNCTION (MANUAL OPERATION FUNCTION)

(a) Turn the ignition switch ON.
   (1) Check that the door glass moves up when each window switch of the regulator master switch assembly is turned UP and moves down when each window switch is turned DOWN.
   (2) Check that the door glass moves up when the window switch of each regulator switch assembly is turned UP and moves down when the window switch is turned DOWN.
   (3) Check that the other door glasses than the driver's door glass do not operate when the window lock switch is turned LOCK.

2. CHECK AUTOMATIC OPERATION FUNCTION

(a) Turn the ignition switch ON.
   (1) Check that the AUTO DOWN operates and the door glass is fully opened when each window switch of the regulator master switch assembly is turned DOWN by double–shift.
   (2) Check that the AUTO DOWN operates and the door glass is fully opened when the window switch of each regulator switch assembly is turned DOWN by double–shift.
   (3) Check that the door glass stops when the applicable switch is turned UP during the AUTO DOWN operation. (However, if the switch is kept in the UP side, the window will transfer to the manual operation.)

POWER WINDOW CONTROL SYSTEM

700GJ–01

LOCATION

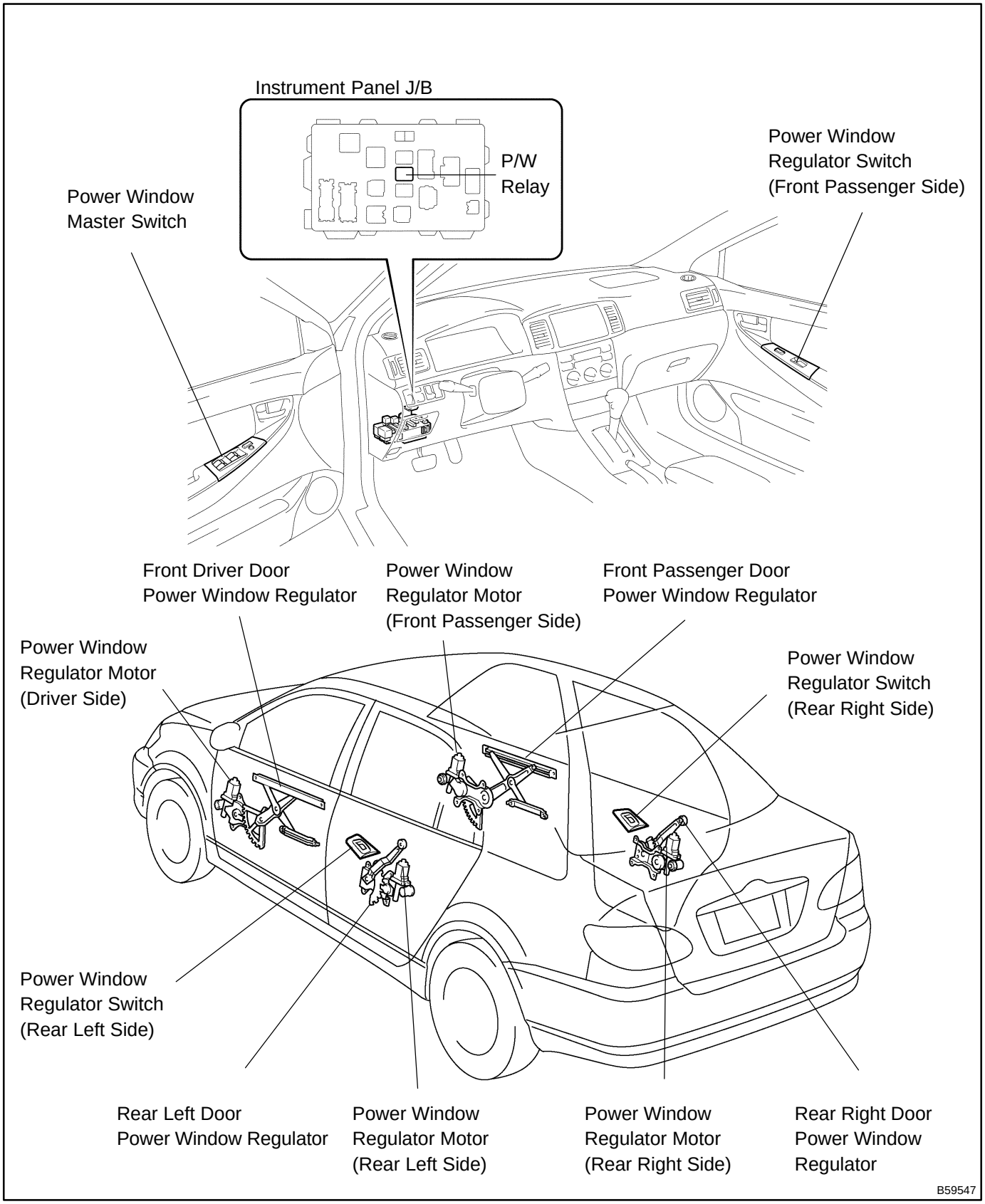

700GL–01

PROBLEM SYMPTOMS TABLE

Symptom	Suspected Area	See page
Power window does not operate (ALL) (Power door lock does not operate)	1. P/W fuse 2. IG1 relay 3. Gauge fuse 4. Wire harness	– 68–1 – –
Power window does not operate (ALL) (Power door lock is normal)	1. Ignition switch 2. Power window master switch 3. Wire harness 4. Power window motor	80–2 70–4 – 70–4
”One–Touch Power Window System” does not operate	1. Power window master switch 2. Power window motor	70–4 70–4
Only one window glass does not move	1. Power window master switch 2. Power window regulator switch 3. Power window motor 4. Wire harness	70–4 70–4 70–4 –
”Window Lock System” does not operate	1. Power window master switch	70–4

700GY–01

INSPECTION

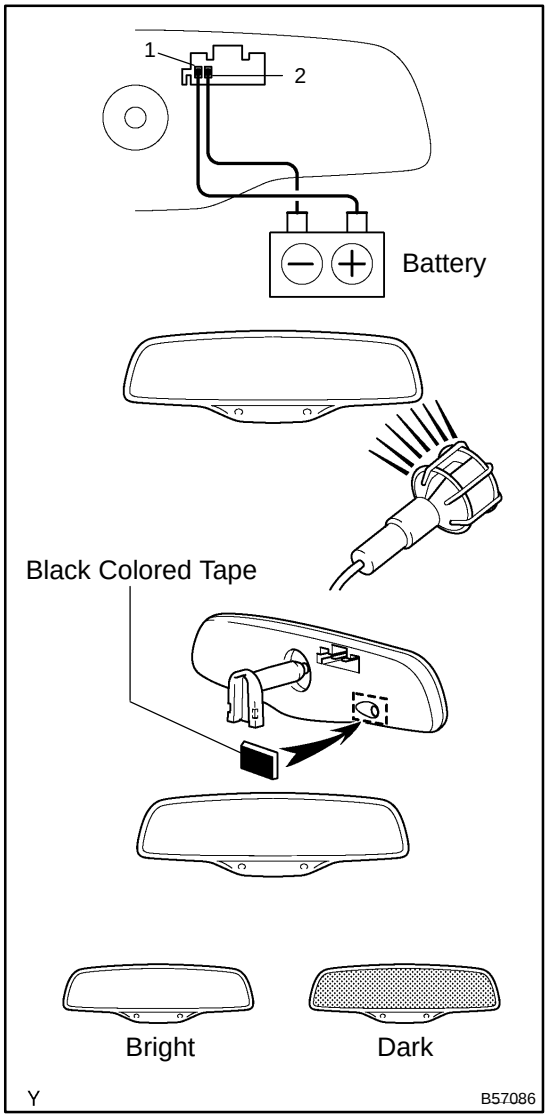

1. INSPECT INNER REAR VIEW MIRROR ASSY

(a) Inspect the electro chromic inner mirror operation.

(1) Connect the positive (+) lead from the battery to terminal 1 and negative (–) lead to terminal 2.

(2) Attach black colored tape to the forward sensor to prevent it from sensing.

(3) Light up the mirror with an electric light, and check that the mirror surface changes from ”bright” to ”dark”.

If the operation is not as specified, replace the inner mirror assembly.

700GX–01

PRE–CHECK

1. SELECTING COMPASS DISPLAY MODE

(a) The compass switch allows you to select the Display or Non–display mode of the compass.

2. SETTING ZONE

(a) Deviation between the ”magnetic north” and ”actual north” differs depending on the location. Therefore, adjustment of the magnetism is required. Since the magnetic condition differs according to the area where the vehicle is used, it is necessary for each user to set the zone (Refer to ”Compass Zone Map”). The zone setting can be changed using the comp switch of the inner mirror.

3. PERFORMING CALIBRATION

(a) Because each vehicle has its own magnetic field, calibration should be performed for each vehicle. This compass function is used when storing the record of the vehicle’s magnetic field.

4. WHEN COMPASS MAGNETIZED:

(a) A compass could be magnetized during shipping by vessels or freight cars. Before delivery, therefore, make sure to perform calibration and ensure that calibration is done properly. If it cannot be done (cannot be complete in spite of driving around several times), it may be caused by magnetization. Demagnetize the vehicle using a demagnetizer and perform calibration again.

5. SETTING COMPASS

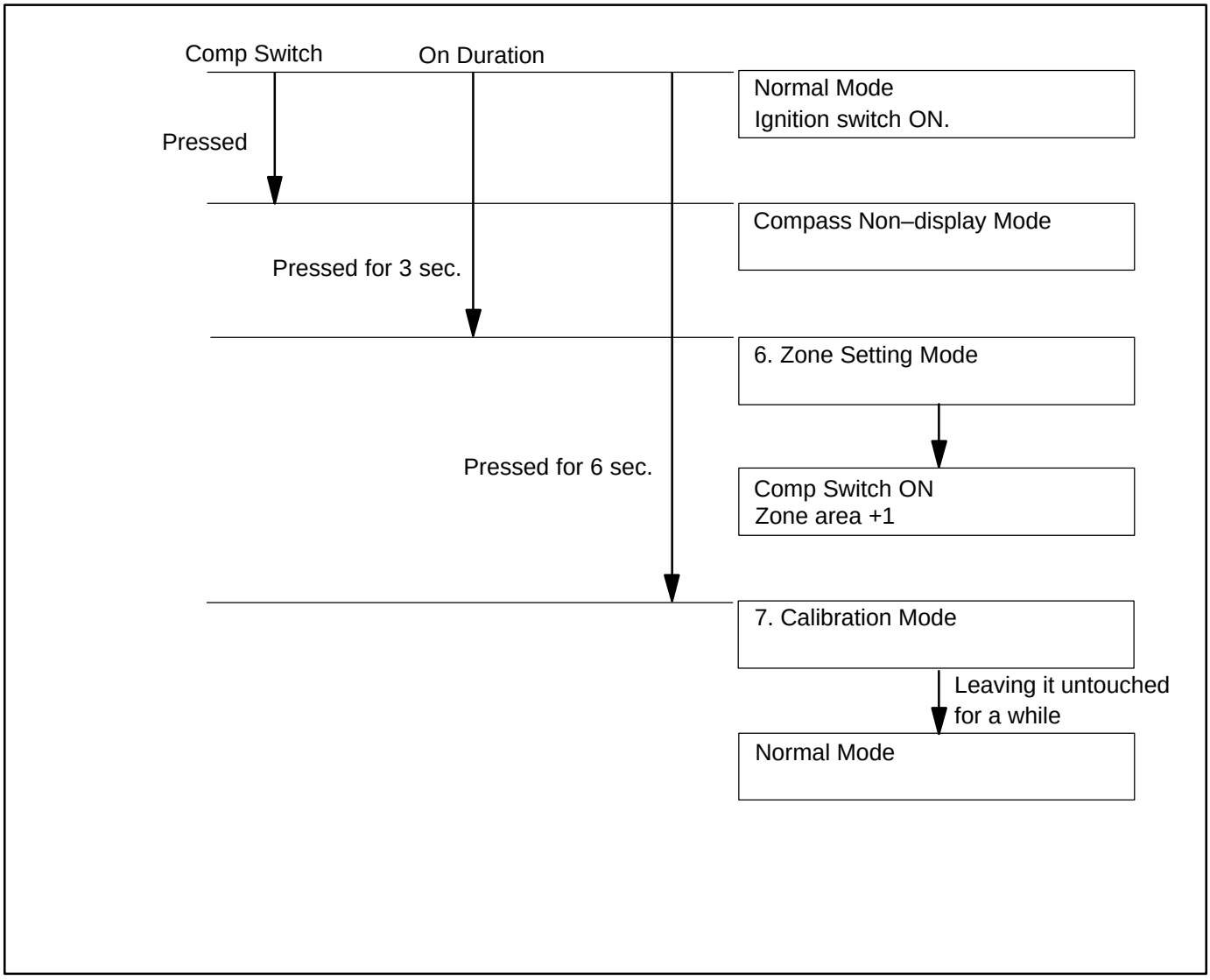

6. ZONE SETTING MODE

(a) Pressing the comp switch for 3 seconds, in the normal mode, will activate the zone setting mode. A number (1 – 15) is displayed on the compass display.

HINT:

In the initial state, ”8” is displayed.

(b) The displayed number increases +1 every time the comp switch is pressed. Referring to the map, check the number for the area where the vehicle will be used and set the zone number.

(c) Leave it untouched for several seconds after setting and check that the compass display shows an azimuthal direction (N, NE, E, SE, S, SW, W or NW) or ”C”.

7. CALIBRATION SETTING MODE

(a) Pressing the comp switch for 6 seconds, in the normal mode, will also activate this mode.

(b) Drive the vehicle at a slow speed of 8 km/h (5 mph) or less in the circular direction.

(c) Driving around the circle 1 to 3 times will display the azimuthal direction on the display, completing the calibration.

HINT:

Once calibration is complete, it is not necessary to perform the above procedures unless the magnetic field strength is drastically changed. If this happens, the azimuthal display will be changed to ”C”.

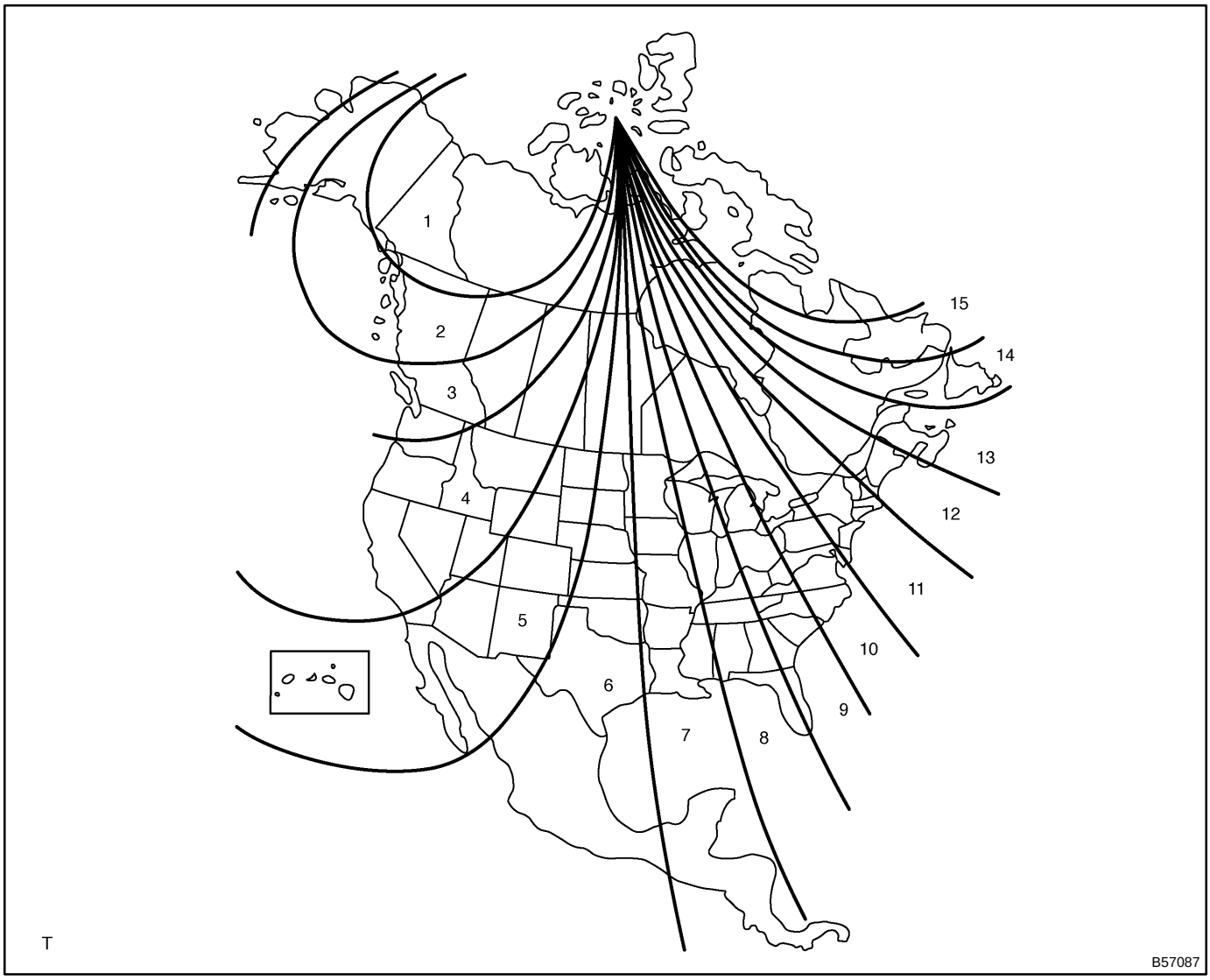

INNER REAR VIEW MIRROR ASSY

700GW–01

REPLACEMENT

HINT:
Installation is according to the reverse order of the removal.

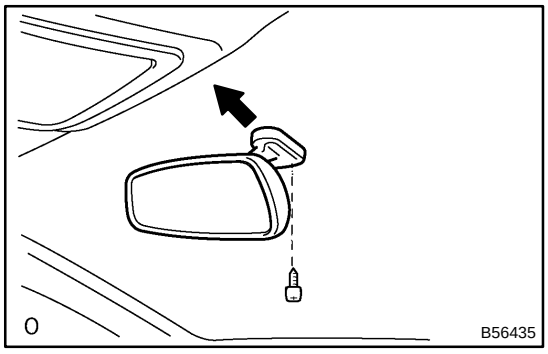

1. REMOVE INNER REAR VIEW MIRROR ASSY

(a) Remove the screw.

(b) w/ Map lamp:
Disconnect the connector.

(c) Remove the rear view inner mirror assembly.

INSPECTION

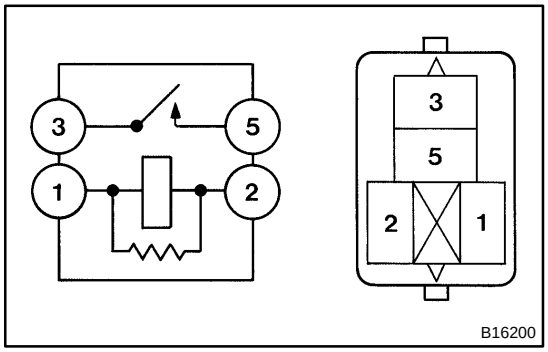

1. INSPECT DEFOGGER RELAY (Marking: DEF)

(a) Remove the defogger relay from the instrument panel J/B.

(b) Inspect the defogger relay.

Standard:

Terminal No.	Condition	Specified condition
1 ⇔ 2	Constant	Continuity
3 ⇔ 5	Apply B+ between terminals 1 and 2	Continuity

If the result is not as specified, replace the relay.

WINDOW DEFOGGER SYSTEM

LOCATION

700GR–01

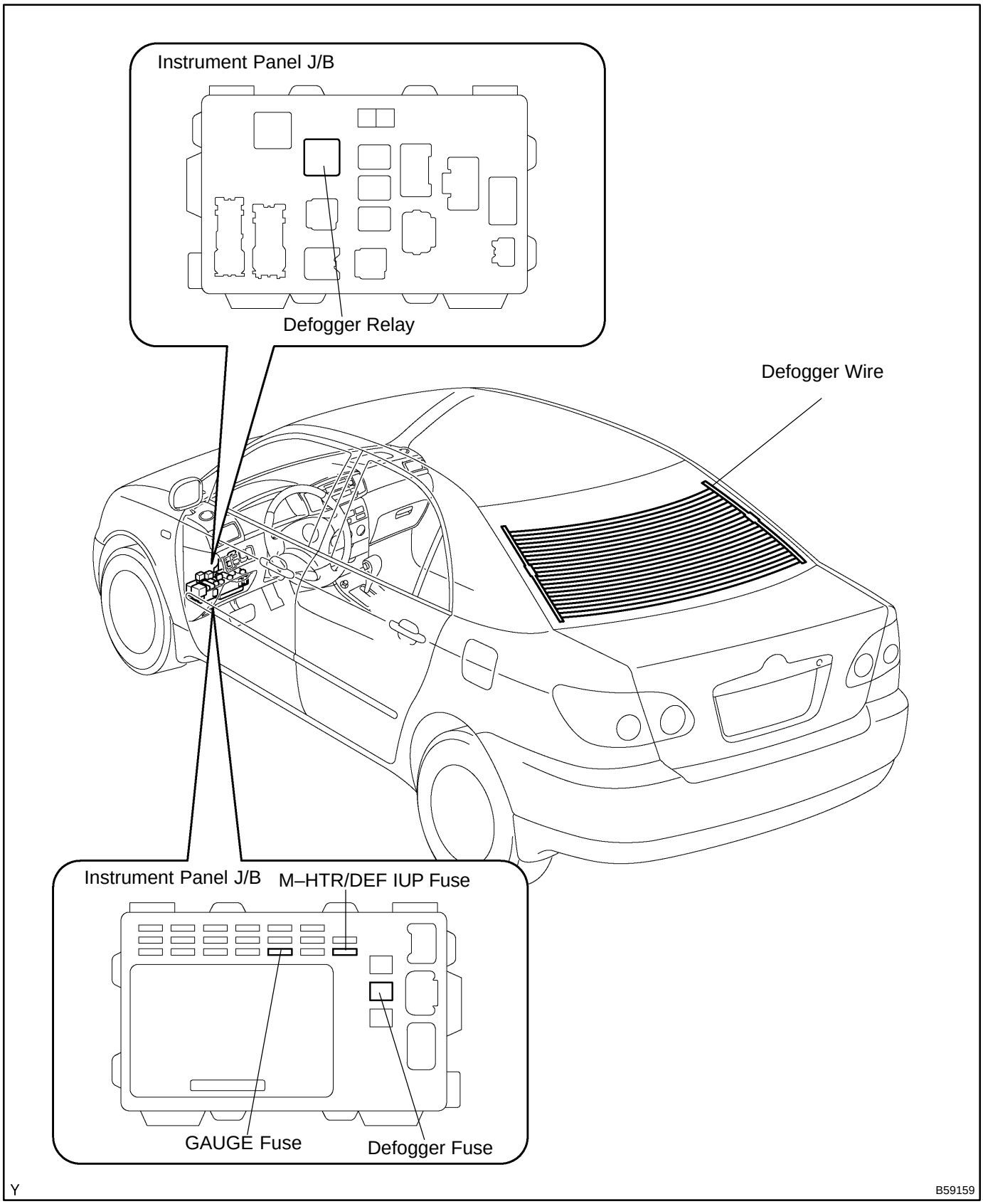

700GS–01

PROBLEM SYMPTOMS TABLE

Symptom	Suspected Area	See page
Rear window defogger does not operate (Indicator lamp on)	1. M–HTR/DEF IUP fuse 2. DEF fuse 3. DEF relay 4. Rear window defogger wire 5. Wire harness	– 68–1 –
Rear window defogger does not operate (Indicator lamp off)	1. GAUGE fuse 2. Defogger switch (A/C panel switch) 3. Air control assembly 4. Wire harness	 70–23 –

WINDSHIELD GLASS

COMPONENTS

700GN–01

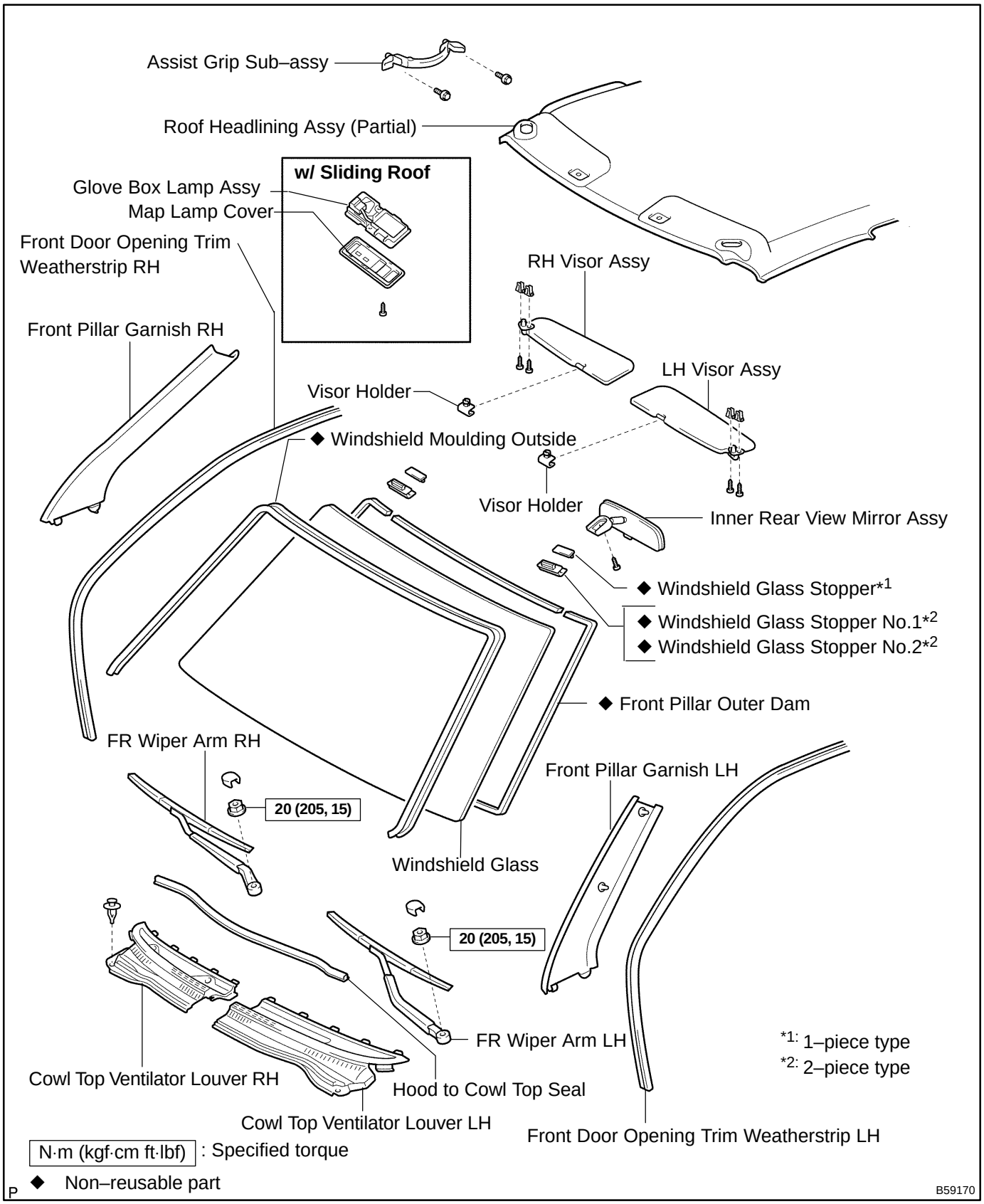

700GO–01

REPLACEMENT

HINT:

Installation is according to the reverse order of the removal.

1. **REMOVE FR WIPER ARM RH (See page 66–6)**
2. **REMOVE FR WIPER ARM LH (See page 66–6)**
3. **REMOVE HOOD TO COWL TOP SEAL (See page 66–6)**
4. **REMOVE COWL TOP VENTILATOR LOUVER LH (See page 66–6)**
5. **REMOVE COWL TOP VENTILATOR LOUVER RH (See page 66–6)**
6. **REMOVE FRONT DOOR WEATHERSTRIP RH (See page 76–21)**
7. **REMOVE FRONT DOOR WEATHERSTRIP LH (See page 76–21)**
8. **REMOVE FRONT PILLAR GARNISH RH (See page 76–21)**
9. **REMOVE FRONT PILLAR GARNISH LH (See page 76–21)**
10. **REMOVE INNER REAR VIEW MIRROR ASSY (See page 70–27)**
11. **REMOVE RH VISOR ASSY (See page 76–21)**
12. **REMOVE LH VISOR ASSY (See page 76–21)**
13. **REMOVE GLOVE BOX LAMP ASSY (See page 76–21)**
14. **REMOVE ASSIST GRIP SUB–ASSY (See page 76–21)**
15. **REMOVE VISOR HOLDER (See page 76–21)**
16. **REMOVE ROOF HEADLINING ASSY (See page 76–21)**
17. **REMOVE ROOF DRIP SIDE FINISH MOULDING CENTER RH (See page 76–17)**
18. **REMOVE ROOF DRIP SIDE FINISH MOULDING CENTER LH (See page 76–17)**

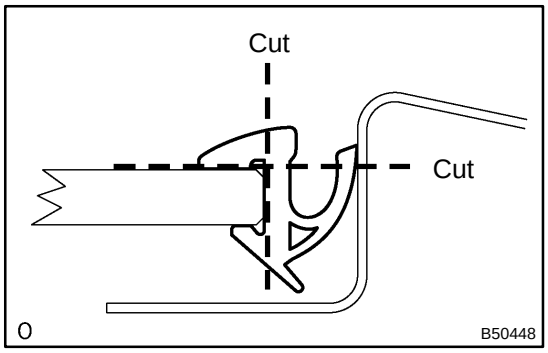

19. REMOVE WINDSHIELD MOULDING OUTSIDE

(a) Using a knife, cut off the moulding as shown in the illustration.

NOTICE:

Do not damage the body with the knife.

(b) Remove the remaining moulding.

HINT:

When removing, make a cut partly, pull and remove it by hand.

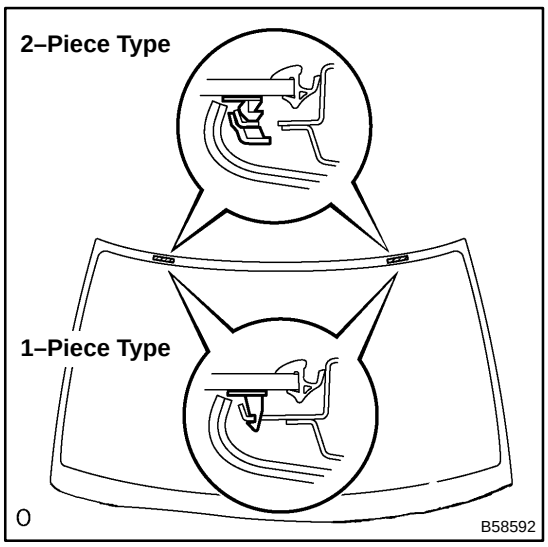

20. REMOVE WINDSHIELD GLASS

HINT:

Depending on a vehicle type, either a 1–piece type or a 2–piece type of stopper is installed.

(a) Push a piano wire through between the body and glass from the interior.

HINT:

Apply protective tape to the outer surface to keep the surface from being scratched.

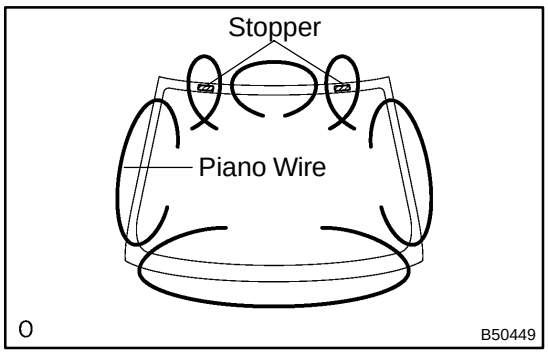

(b) Tie both wire ends to wooden blocks or similar objects.

NOTICE:

- **When separating the glass, take care not to damage the paint and interior/exterior ornaments.**
- **To prevent the piano wire to be cut, do not cross it.**

(c) Cut the adhesive by pulling the piano wire around it.

(d) Using a suction rubber, remove the glass.

NOTICE:

Leave as much adhesive on the body as possible when cutting off the glass.

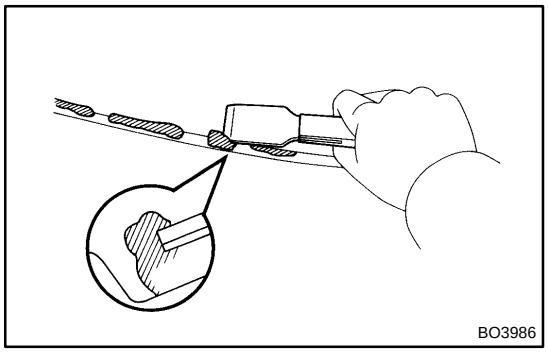

21. CLEAN WINDSHIELD GLASS

(a) Using a scraper, remove the damaged stoppers, dam and adhesive sticking to the glass.

(b) Clean the outer circumference of the glass with white gasoline.

NOTICE:

- **Do not touch the glass after cleaning it.**
- **Be careful not to damage the body.**

22. INSTALL WINDSHIELD GLASS STOPPER NO.1

(a) Install 2 new windshield glass stoppers No.1 to the body.

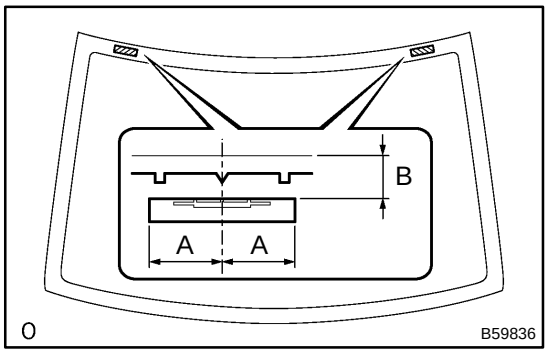

23. INSTALL WINDSHIELD GLASS STOPPER NO.2

(a) Coat the installation part of the stopper with Primer G.

NOTICE:

- **Dry the primer coating for 3 minutes or more.**
- **Do not apply too much primer.**

(b) Install 2 new windshield glass stoppers No.2 onto the glass as shown in the illustration.

A: 40.0 mm (1.575 in.)

B: 7.7 mm (0.303 in.)

24. INSTALL FRONT PILLAR OUTER DAM

(a) Coat the installation part of the front pillar outer dam with Primer G.

NOTICE:

- **Dry the primer coating for 3 minutes or more.**
- **Do not apply too much primer.**

(b) Install 2 new front pillar outer dams with double–stick tape as shown in the illustration.

NOTICE:

Do not touch the glass face after cleaning it.

A: 7 mm (0.28 in.)
B: 22.5 mm (0.886 in.)
C: 45 mm (1.77 in.)
D: 5 mm (0.20 in.)

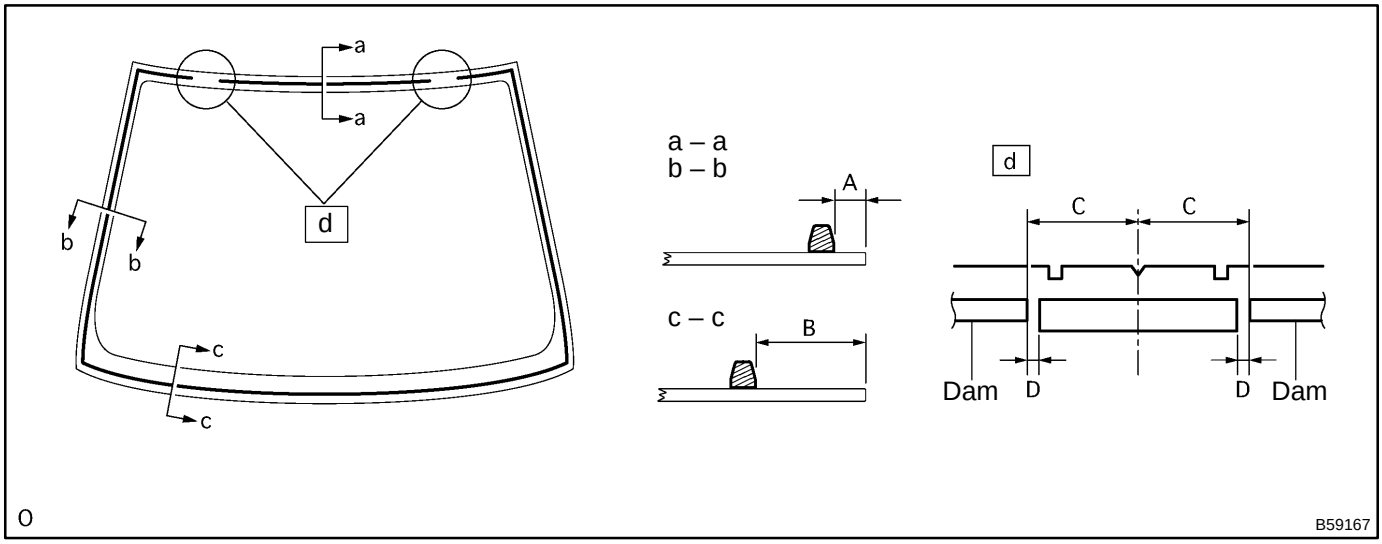

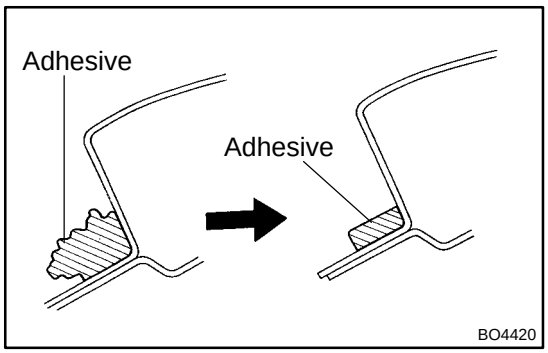

25. INSTALL WINDSHIELD GLASS

(a) Clean and shape the contact surface of the vehicle's body.

(1) Using a knife, cut away any rough areas on the body.

HINT:

Leave as much adhesive on the body as possible.

(2) Clean the cut surface of the adhesive with a piece of shop rag saturated in cleaner.

(b) Position the glass.

(1) Using a suction rubber, place the glass in the correct position.

(2) Check that all the contacting parts of the glass rim are perfectly even.

(3) Place reference marks between the glass and body.

NOTICE:

Check that the stoppers are attached to the body correctly.

HINT:

When reusing the glass, check and correct the reference mark's positions.

(4) Remove the glass.

(c) Coat the contact surface of the body panel with Primer M.

(d) Using a brush, coat the exposed part of the contact surface on the vehicle side with Primer M.

NOTICE:

- **Dry the primer coating for 3 minutes or more.**
- **Do not coat the adhesive with Primer M.**
- **Do not apply too much primer.**

(e) Coat the contact surface of the glass with Primer G.

(1) Using a brush or sponge, coat the edge of the glass and the contact surface with Primer G.

NOTICE:

- **Dry the primer coating for 3 minutes or more.**
- **Do not apply too much primer.**

(f) Apply adhesive.

(1) Cut off the tip of the cartridge nozzle as shown in the illustration.

Part No. 08850–00801 or equivalent

HINT:

After cutting off the tip, use all adhesive within the time described in the table below.

Temperature	Tackfree time
35°C (95°F)	15 minutes
20°C (68°F)	100 minutes
5°C (41°F)	8 hours

(2) Load the sealer gun with the cartridge.

(3) Coat the glass with adhesive, as shown in the illustration.

A: 8.0 mm (0.315 in.) or more

B: 12.5 mm (0.492 in.) or more

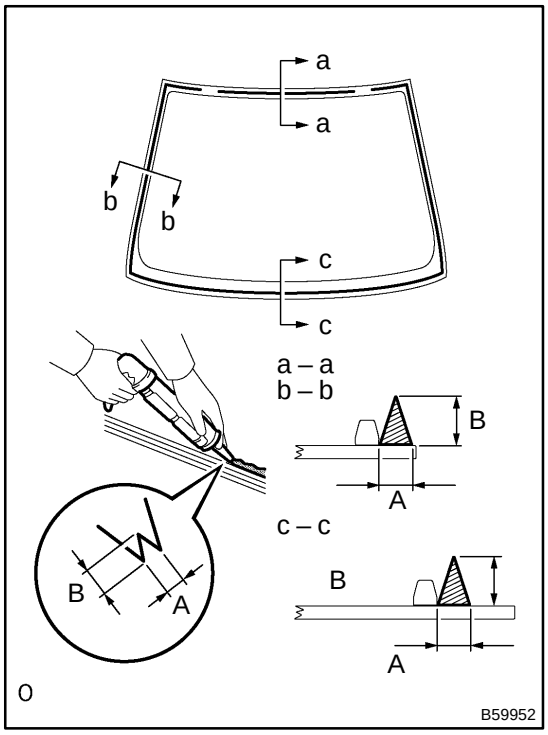

(g) Install the glass.

(1) Using a suction rubber, position the glass so that the reference marks are aligned, and press it in gently along the rim.

NOTICE:

- **Dry the primer coating for 3 minutes or more.**
- **Check that the stoppers are attached to the body correctly.**
- **Check the clearance between the body and glass.**

(2) Lightly press the glass front surface for close contact.

(3) Using a scraper, remove any excess or protruding adhesive.

HINT:

Apply adhesive on the glass rim.

26. INSTALL WINDSHIELD MOULDING OUTSIDE

(a) Install a new windshield moulding to the windshield glass before the adhesive has hardened.

(b) Hold the windshield glass in place securely with protective tape or equivalent until the adhesive has completely hardened.

(c) Using a scraper, remove any excess or protruding adhesive before the adhesive has hardened.

NOTICE:

Take care not to drive the vehicle during the time described in the table below.

Temperature	Tackfree time
35°C (95°F)	1.5 hours
20°C (68°F)	5 hours
5°C (41°F)	24 hours

27. INSPECT FOR LEAK AND REPAIR

(a) Conduct a leak test after the adhesive has completely hardened.

(b) Seal any leak with sealant.

CLOCK ASSY

7108L–01

REPLACEMENT

1. REMOVE CONSOLE PANEL UPPER(See page 71–10)
2. REMOVE HEATER CONTROL KNOB
3. REMOVE INSTRUMENT CLUSTER FINISH PANEL(See page 71–10)

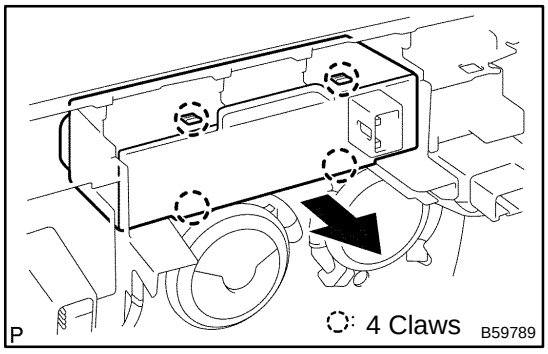

4. REMOVE CLOCK ASSY

(a) Using a screwdriver, disengage the 4 claws, remove the clock as shown in the illustration.

HINT:

Tape the screwdriver tip before use.

COMBINATION METER ASSY

7108K–01

OVERHAUL

HINT:

COMPONENTS: See page 71–7

1. REMOVE METER HOOD SUB–ASSY(See page 71–10)

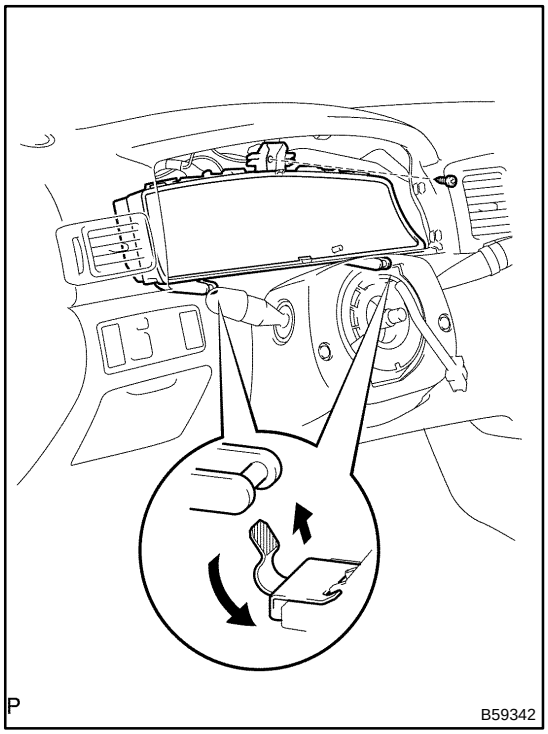

2. REMOVE COMBINATION METER ASSY

(a) Remove the screw.

(b) Disengage the 2 clips as shown in the illustration.

(c) Disconnect the connector, then remove the combination meter.

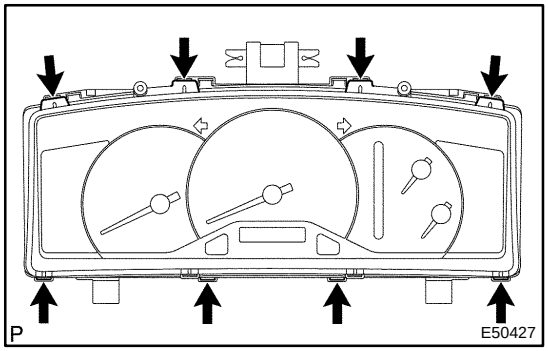

3. REMOVE COMBINATION METER GLASS

(a) Disengage the 8 claws, then remove the combination meter glass.

INSTRUMENT PANEL/METER

7108M–01

COMPONENTS

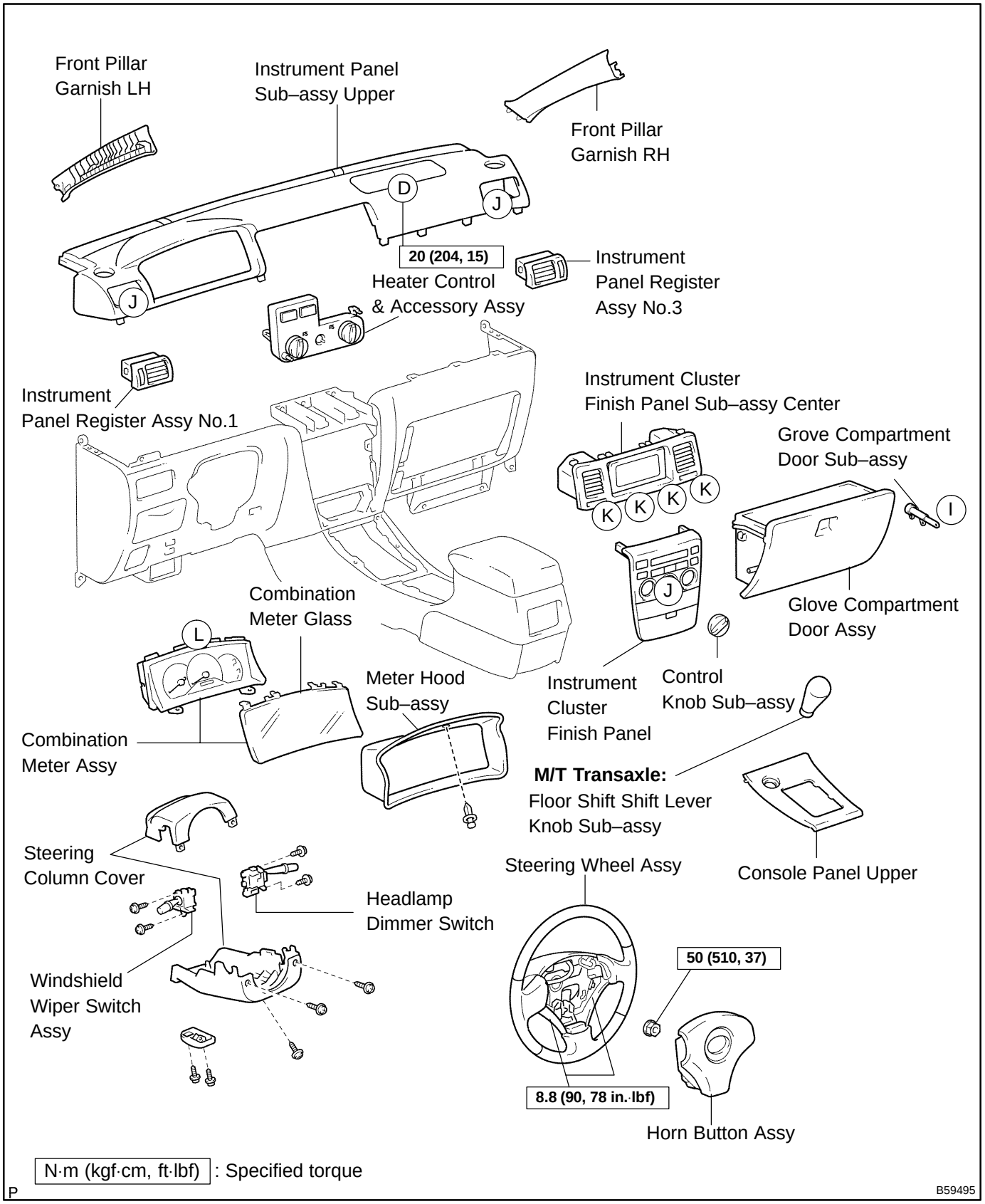

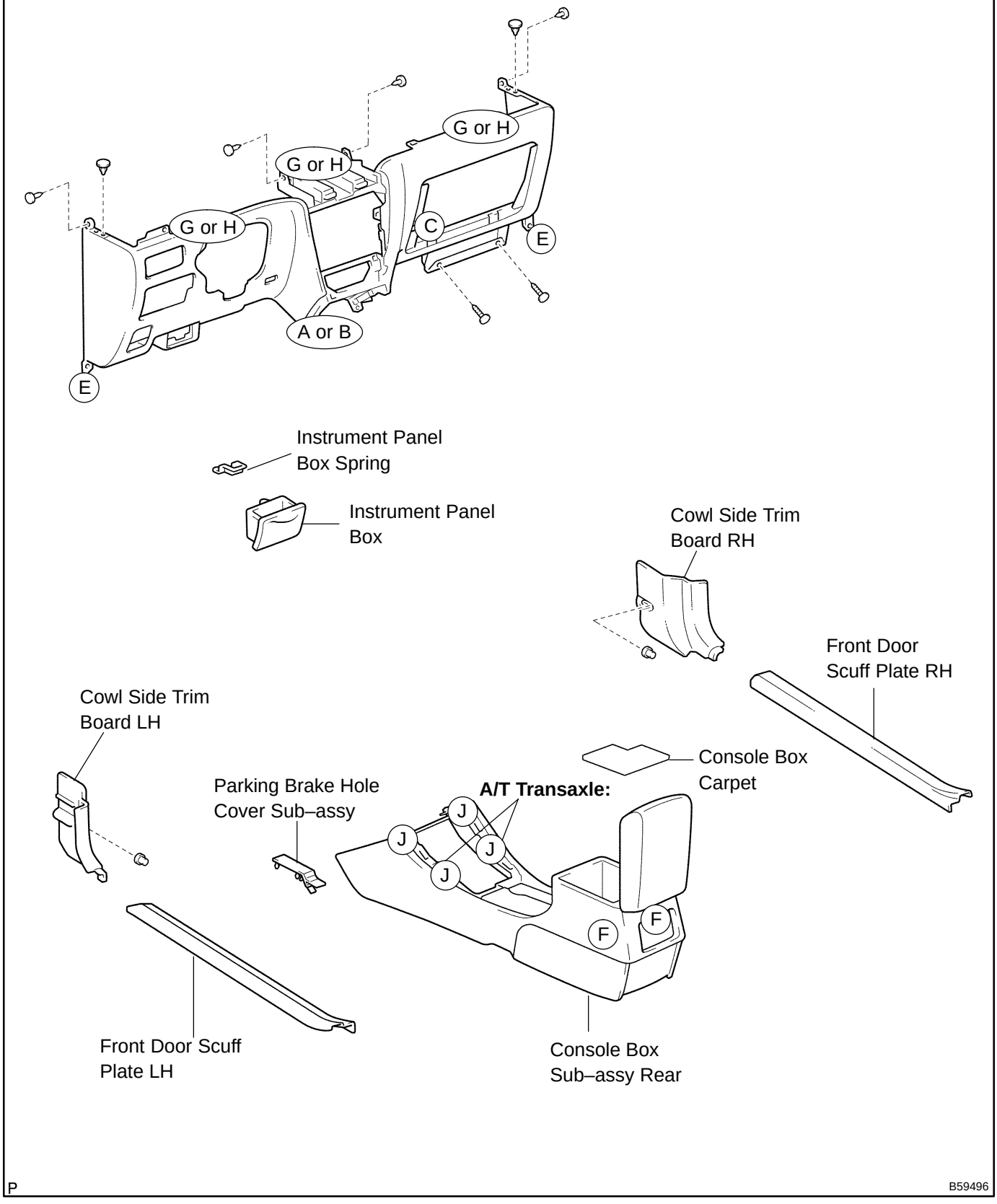
G or H
G or H
G or H
C
E
A or B
E
Instrument Panel
Box Spring
Instrument Panel
Box
Cowl Side Trim
Board RH
Front Door
Scuff Plate RH
Cowl Side Trim
Board LH
Console Box
Carpet
Parking Brake Hole
Cover Sub–assy
A/T Transaxle:
J
J
J
J
F
F
Front Door Scuff
Plate LH
Console Box
Sub–assy Rear
P
B59496

INSTRUMENT PANEL SUB–ASSY LOWER

7108I–01

PRECAUTION

1. PRECAUTION FOR VEHICLE WITH SRS AIRBAG AND SEAT BELT PRETENSIONER

(a) Some operations in this section may affect the SRS airbag. Before performing the corresponding operations, please read the NOTICE of the SRS airbag to perform the proper operations.

7108J–02

REPLACEMENT

HINT:

COMPONENTS: See page 71–7

1. TABLE OF BOLT, SCREW AND NUT

NOTICE:

Be sure to tape the tip of the screwdriver when using it to disengage the meshing of the clips and claws.

HINT:

Indicate the bolts, screws and nuts, which are necessary for installation and removal of the instrument panel, in the illustration and the text with alphabets.

mm (in.) (L = Length)

Code	Shape	Code	Shape	Code	Shape
〈A〉	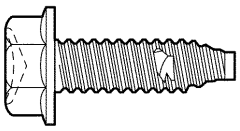 ϕ=6 (0.24) L=30 (1.18) B50531 55394-12010	〈B〉	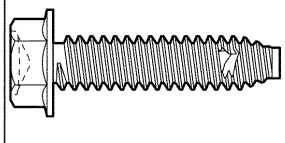 ϕ=7 (0.28) L=30 (1.18) B58168 55394-12020	〈C〉	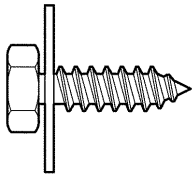 ϕ=6 (0.24) L=20 (0.79) B52926 90159-60125
〈D〉	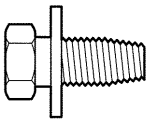 ϕ=8 (0.32) L=18 (0.71) B30744 91626-60818	〈E〉	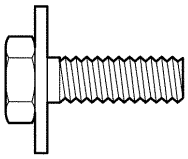 ϕ=6 (0.24) L=16 (0.63) B50534 91635-60616	〈F〉	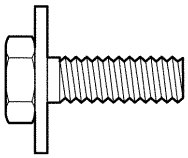 ϕ=6 (0.24) L=25 (0.98) B50534 91635-60625
〈G〉	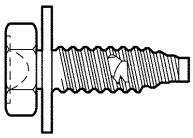 ϕ=6 (0.24) L=20 (0.79) B52928 90159-60546	〈H〉	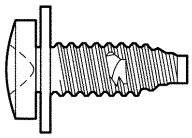 ϕ=7 (0.28) L=20 (0.79) B52927 90159-70004	〈I〉	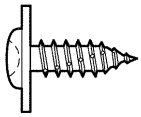 ϕ=5 (0.20) L=14 (0.55) B59217 B50529 90167-50022
〈J〉	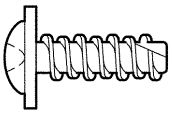 ϕ=5 (0.20) L=14 (0.55) B32741 93568-55014	〈K〉	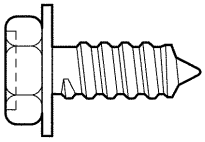 ϕ=5 (0.20) L=16 (0.63) B50530 90159-50322	〈L〉	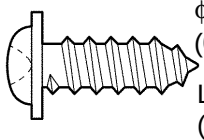 ϕ=5 (0.20) L=18 (0.71) B50532 93567-55018

P B59370

2. PRECAUTION

3. SEPARATE BATTERY NEGATIVE TERMINAL(See page 60–1)

4. PLACE FRONT WHEELS FACING STRAIGHT AHEAD

5. REMOVE HORN BUTTON ASSY(See page 60–13)

6. REMOVE STEERING WHEEL ASSY(See page 50–8)

SST 09950–50013 (09951–05010, 09952–05010, 09953–05020, 09954–05021)

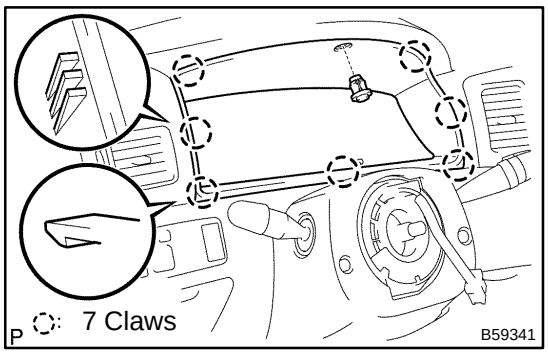

7. REMOVE METER HOOD SUB–ASSY

(a) Remove the clip.

(b) Using a screwdriver, disengage the 7 claws, then remove the meter hood sub–assy.

HINT:

Tape the screwdriver tip before use.

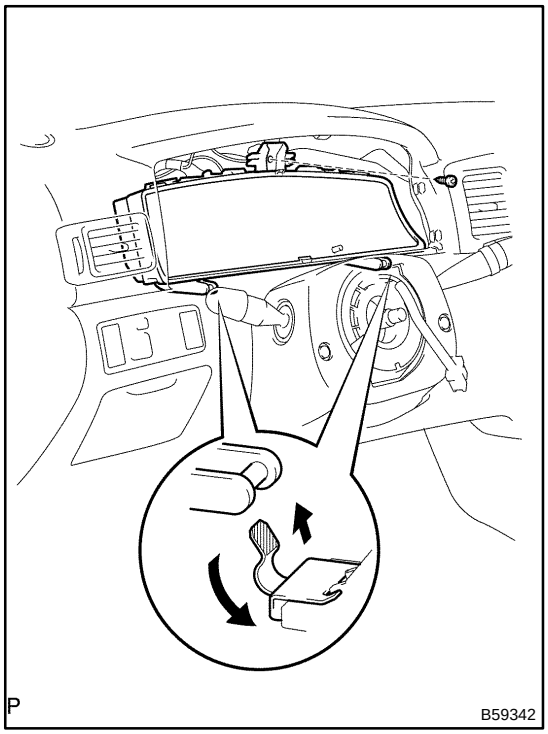

8. REMOVE COMBINATION METER ASSY

(a) Remove the screw<L>.

(b) Disengage the 2 claws as shown in the illustration.

(c) Disconnect the connector, then remove the combination meter assy.

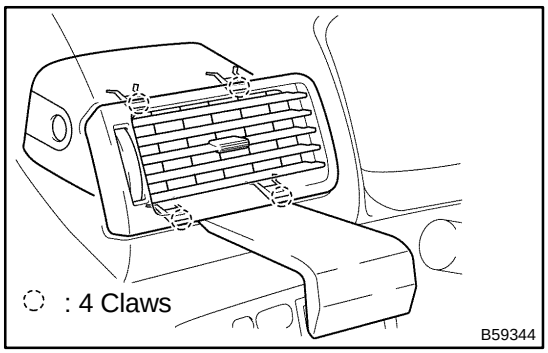

9. REMOVE INSTRUMENT PANEL REGISTER ASSY NO.1

(a) Using a moulding remover, disengage the 4 claws, then remove the instrument panel register assy No.1.

10. REMOVE INSTRUMENT PANEL REGISTER ASSY NO.3

11. REMOVE FLOOR SHIFT SHIFT LEVER KNOB SUB–ASSY (M/T TRANSAXLE)

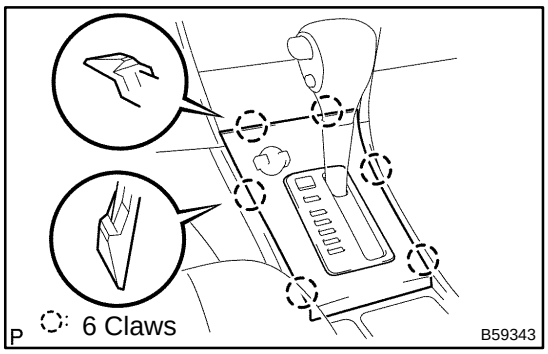

12. REMOVE CONSOLE PANEL UPPER

(a) Using a screwdriver, disengage the 6 claws.

HINT:

Tape the screwdriver tip before use.

(b) Disconnect the connector, then remove the console panel upper.

13. REMOVE HEATER CONTROL KNOB

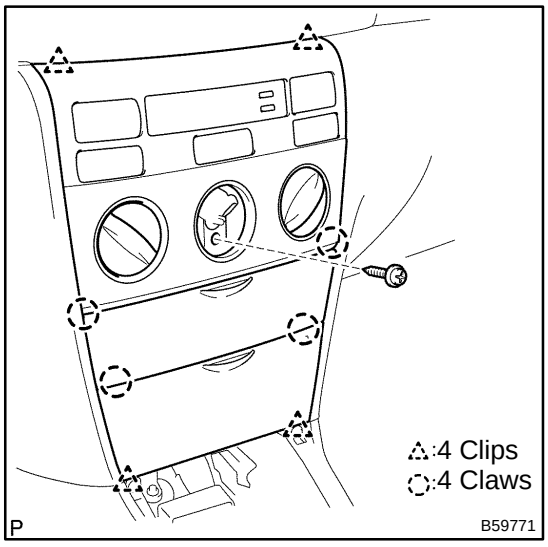

14. REMOVE INSTRUMENT CLUSTER FINISH PANEL

(a) Remove the screw<J>.

(b) Using a screwdriver, disengage the 4 clips and 4 claws, then remove the instrument cluster finish panel.

HINT:

Tape the screwdriver tip before use.

(c) Disconnect the connectors.

NOTICE:

Do not pull the lid of auxiliary box.

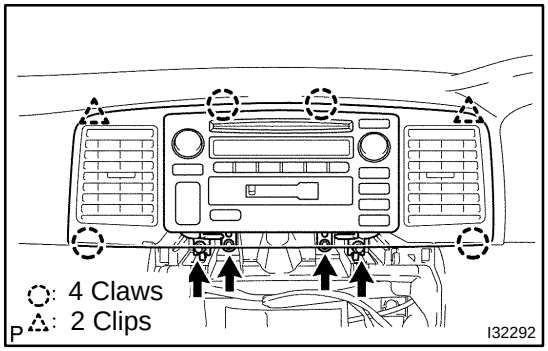

15. REMOVE INSTRUMENT CLUSTER FINISH PANEL SUB–ASSY CENTER

(a) Remove the 4 screws<K>.

(b) Using a screwdriver, disengage the 2 clips and 4 claws, then remove the instrument cluster finish panel sub–assy center with radio receiver assy.

HINT:

Tape the screwdriver tip before use.

(c) Disconnect the connectors.

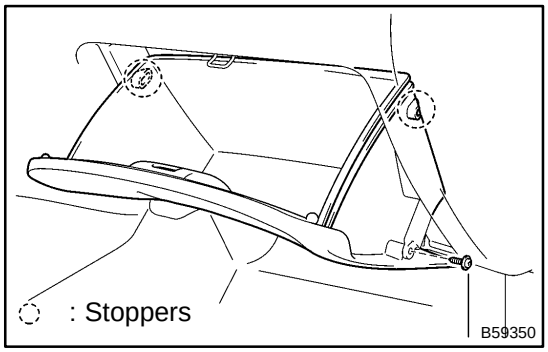

16. REMOVE GLOVE COMPARTMENT DOOR ASSY

(a) Remove the screw<I> from the glove compartment door stopper sub–assy.

(b) Deform the upper part of the glove compartment door assy to release the stoppers.

(c) Pull the glove compartment door assy upward to remove it.

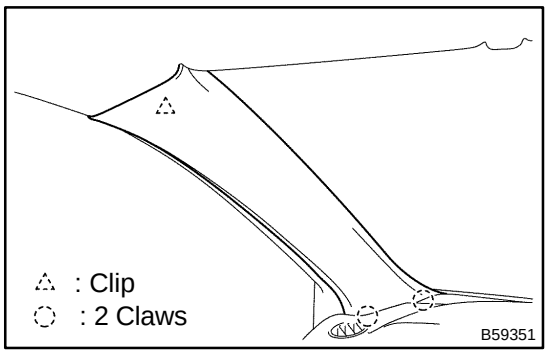

17. REMOVE FRONT PILLAR GARNISH LH

(a) Disengage the clip.

(b) Pull the front pillar garnish LH upward and disengage the 2 claws, then remove the front pillar garnish LH.

18. REMOVE FRONT PILLAR GARNISH RH

19. SEPARATE PASSENGER AIRBAG CONNECTOR(See page 60–25)

20. REMOVE INSTRUMENT PANEL SUB–ASSY UPPER

(a) Remove the bolt<D> and 2 screws<J>.

(b) Using a moulding remover, disengage the 3 clips and 8 claws.

(c) Remove the instrument panel sub–assy upper.

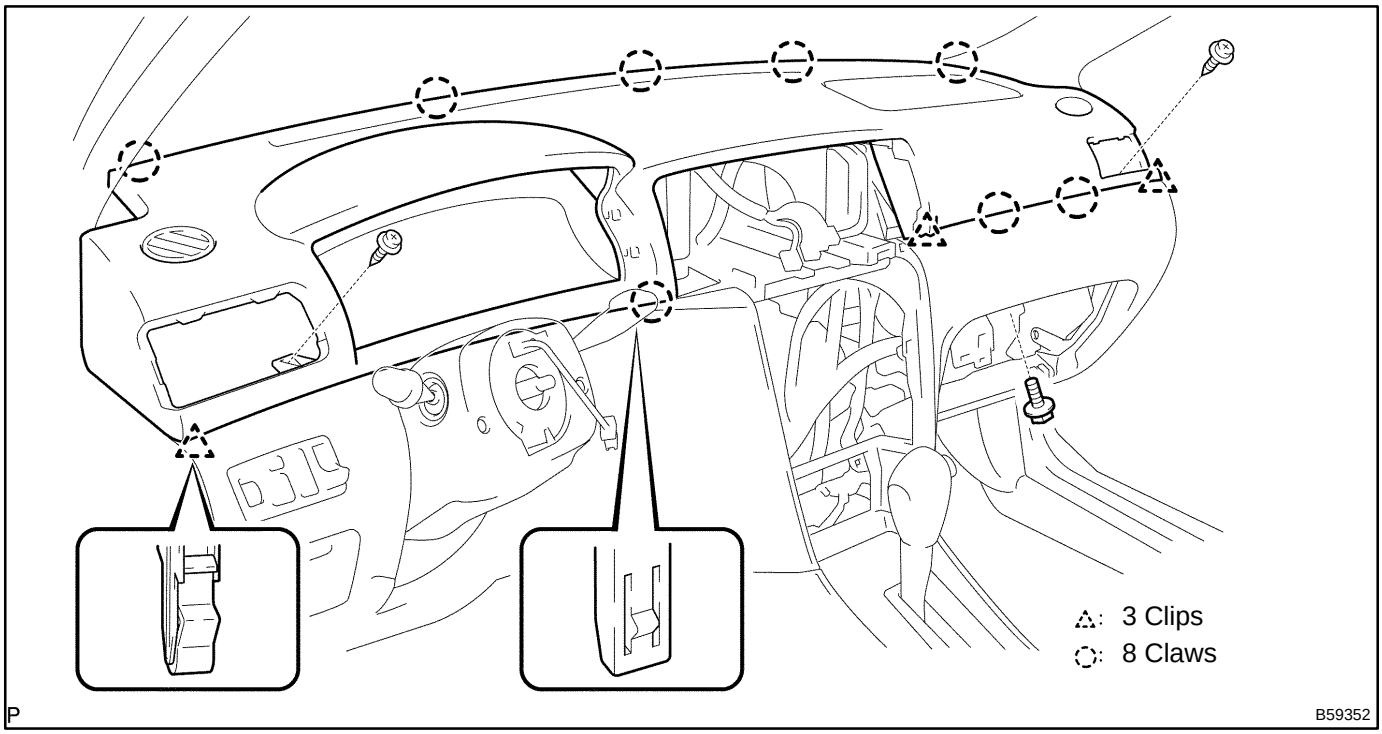

21. REMOVE HEATER CONTROL & ACCESSORY ASSY(See page 55–13)

22. REMOVE STEERING COLUMN COVER(See page 50–8)

23. REMOVE HEADLAMP DIMMER SWITCH ASSY(See page 65–23)

24. REMOVE WINDSHIELD WIPER SWITCH ASSY(See page 66–11)

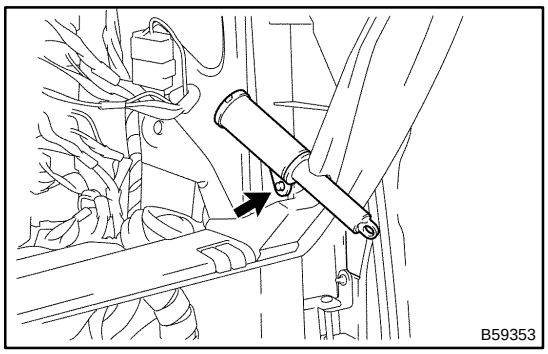

25. REMOVE GLOVE COMPARTMENT DOOR STOPPER SUB–ASSY

(a) Disengage the clip, then remove the glove compartment door stopper sub–assy.

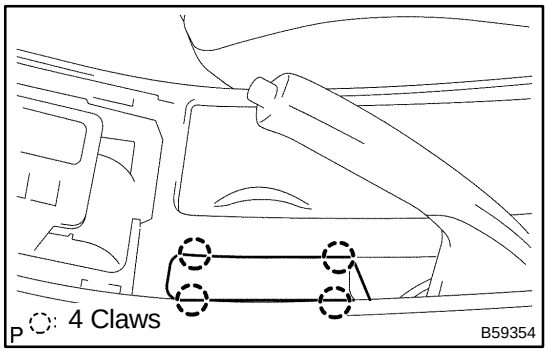

26. REMOVE PARKING BRAKE HOLE COVER SUB–ASSY

(a) Using a screwdriver, disengage the 4 claws, then remove the parking brake hole cover sub–assy.

HINT:
Tape the screwdriver tip before use.

27. REMOVE CONSOLE BOX CARPET

28. REMOVE CONSOLE BOX SUB–ASSY REAR (M/T TRANSAXLE)

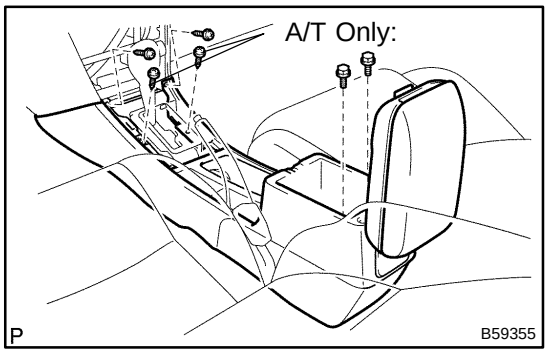

29. REMOVE CONSOLE BOX SUB–ASSY REAR

(a) A/T Transaxle:
Remove the 2 bolts<F>, 4 screws<J> and console box sub–assy rear.

(b) M/T Transaxle:
Remove the 2 bolts<F>, 2 screws<J> and console box sub–assy rear.

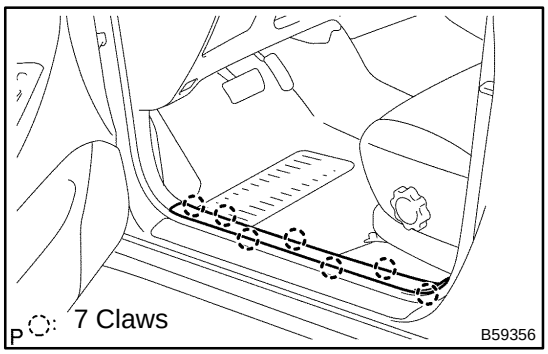

30. REMOVE FRONT DOOR SCUFF PLATE LH

(a) Using a screwdriver, disengage the 7 claws, then remove the front door scuff plate LH.

HINT:
Tape the screwdriver tip before use.

31. REMOVE FRONT DOOR SCUFF PLATE RH

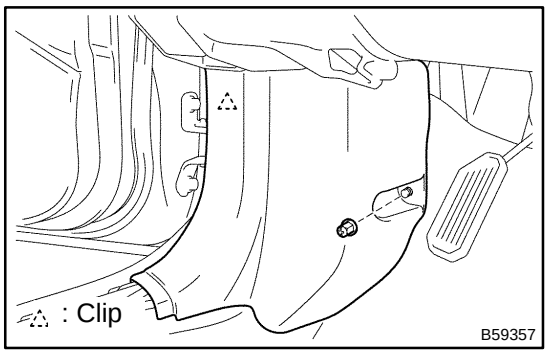

32. REMOVE COWL SIDE TRIM BOARD LH

(a) Remove the clip.

(b) Disengage the clip, then remove the cowl side trim board LH.

33. REMOVE COWL SIDE TRIM BOARD RH

34. REMOVE INSTRUMENT PANEL SUB–ASSY LOWER

(a) Disconnect the DLC3 connector.

(b) Remove the hood lock control lever.

(c) Remove the 3 screws<G> or <H>.

(d) Remove the 2 bolts<E>.

(e) Remove the bolt<A> or <B>.

(f) Remove the bolt<C>.

(g) Remove the 8 clips and instrument panel sub–assy lower.

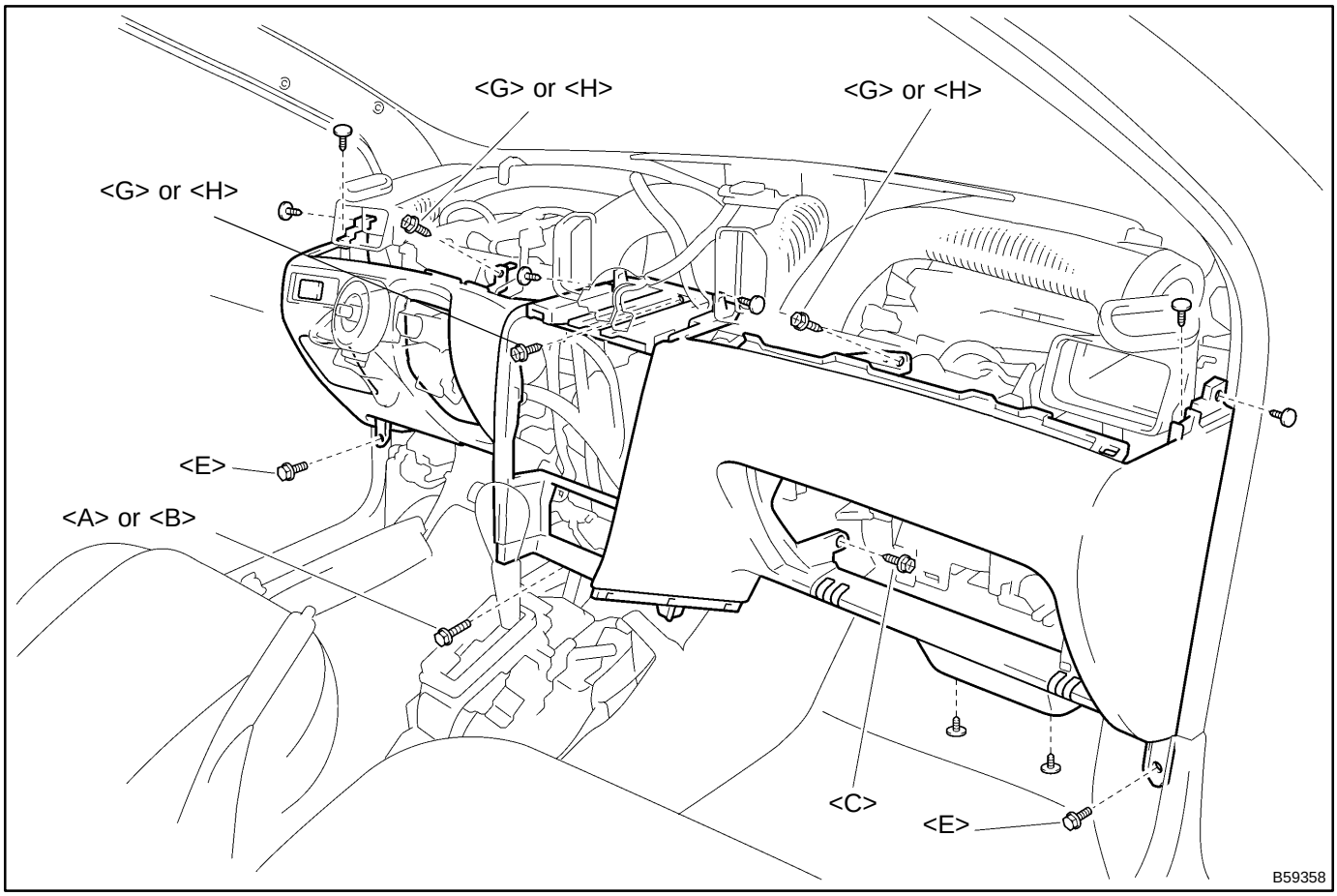

35. REMOVE INSTRUMENT PANEL BOX

36. REMOVE INSTRUMENT PANEL BOX SPRING

37. INSTALL HEATER CONTROL & ACCESSORY ASSY(See page 55–13)

38. INSTALL INSTRUMENT PANEL SUB–ASSY UPPER

(a) Install the instrument panel sub–assy upper.

(b) Install the bolt<D> and 2 screws<J>.

Torque:

Bolt <D>: 20 N·m (204 kgf·cm, 15 ft·lbf)

39. INSTALL INSTRUMENT CLUSTER FINISH PANEL SUB–ASSY CENTER

40. CENTER SPIRAL CABLE(See page 60–22)

41. INSTALL STEERING WHEEL ASSY(See page 50–8)

42. INSPECT STEERING WHEEL CENTER POINT

43. INSPECT HORN BUTTON ASSY(See page 60–13)

44. INSTALL HORN BUTTON ASSY(See page 60–13)

45. INSPECT SRS WARNING LIGHT

7108O–01

ON–VEHICLE INSPECTION

1. INSPECT SPEEDOMETER

(a) Check the operation.

(1) Using a speedometer tester, inspect the speedometer fro allowable indication error and check the operation of the odometer.

Reference:

USA (mph)		CANADA (km/h)	
Standard indication	Allowable range	Standard indication	Allowable range
20	19 – 22	20	18 – 23
40	39 – 42.5	40	40 – 44
60	59 – 63	60	60 – 64.5
80	79 – 83.5	80	80 – 85
100	99 – 104	100	100 – 105
–	–	120	120 – 125.5
–	–	140	140 – 146
–	–	160	160 – 167

NOTICE:

Tire wear and tire over or under inflation will increase the indication error.

(2) Check the deflection width of the speed meter indicator.

Reference: Below 0.5 km/h / 0.3 mph

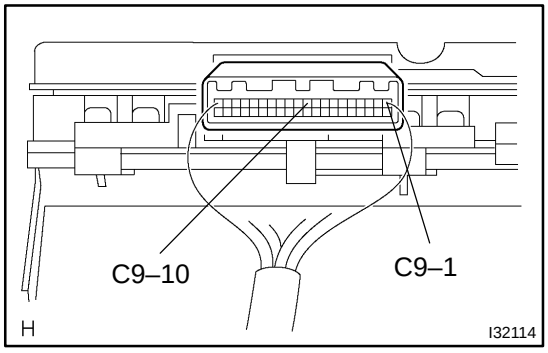

2. INSPECT OUTPUT SIGNAL OF VEHICLE SPEED

(a) Check for standard signal.

(1) While driving the vehicle at the speed of 10 km/h, check the voltage between the terminals C9–10 and C9–1 of the combination meter assy.

Standard: Fluctuation between 10 to 14 V or less is repeated 7 times within 1 sec.

NOTICE:

Check it with the ignition switch ON and the connector connected.

3. INSPECT TACHOMETER

(a) Check the operation

(1) Connect a tune–up test tachometer, and start the engine.

NOTICE:

- **Reversing the connection of the tachometer will damage the transistors and diodes inside.**
- **When removing or installing the tachometer, be careful not to drop or subject it to heavy shocks.**

(2) Compare the test and tachometer indications.

DC 13.5 V, 25 °C at (77 °F)

Standard indication (r/min)	Allowable range (r/min) Data in ( ) are for reference
700	630 – 770
1,000	(900 – 1,100)
2,000	(1,850 – 2,150)
3,000	2,800 – 3,200
4,000	(3,800 – 4,200)
5,000	4,800 – 5,200
6,000	(5,750 – 6,250)
7,000	6,700 – 7,300

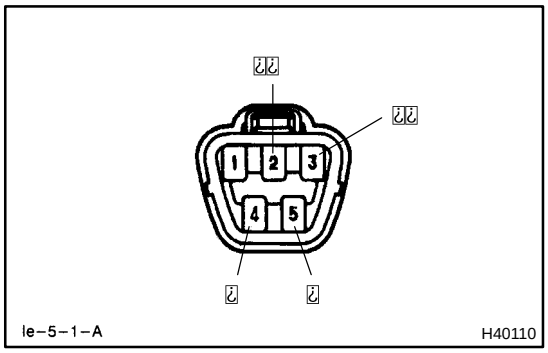

4. INSPECT FUEL RECEIVER GAUGE

(a) Inspect the circuit.

(1) Disconnect the connector from the sender gauge.

(2) Turn the ignition switch ON, then check the position of the receiver gauge needle.

Needle position: EMPTY

(3) Connect terminals 2 and 3 on the wire harness side connector and Turn the ignition switch ON, then check the position of the receiver gauge needle.

Needle position: FULL

5. INSPECT FUEL LEVEL WARNING

(a) Inspect the circuit.

(1) Disconnect the connector from the sender gauge.

(2) Turn the ignition switch ON, check the fuel level needle indicates EMPTY and fuel level warning lights light on.

6. INSPECT WATER TEMPERATURE RECEIVER GAUGE WARNING LIGHT

(a) Inspect the circuit.

(1) Disconnect the connector from the sender gauge.

(2) Turn the ignition switch ON, check the position of the water temperature receiver gauge needle.

Needle position: COOL

(3) Connect between terminals on the wire harness side connector, then check the position of the water temperature receiver gauge needle.

Needle position: HOT

7. INSPECT LOW OIL PRESSURE WARNING LIGHT

(a) Inspect the circuit.
   (1) Disconnect the connector from the low oil pressure switch.
   (2) Turn the ignition switch ON.
   (3) Connect the terminal of wire harness side connector and ground, then check the warning low oil pressure warning light.

   Low oil pressure warning light: Light on

8. INSPECT LOW OIL PRESSURE SWITCH

(a) Check the continuity.
   (1) Disconnect the connector from the low oil pressure switch.
   (2) Check that continuity exists between terminal and ground.

   Engine stopped: continuity

   Engine running: no continuity

9. INSPECT BRAKE WARNING LIGHT

(a) Inspect the parking brake warning light.
   (1) Disconnect the connector from the parking brake switch and ground terminal on the wire harness side connector.
   (2) Turn the ignition switch ON and check that the warning light lights up.

(b) Inspect the brake fluid level warning light.
   (1) Disconnect the connector from the brake fluid level warning switch and connect terminals on the wire harness side connector.
   (2) Turn the ignition switch ON and check that the warning light lights up.

10. INSPECT BRAKE FLUID LEVEL WARNING SWITCH

(a) Inspect the continuity.
   (1) Remove the reservoir tank cap and strainer.
   (2) Disconnect the connector.
   (3) Check that the continuity exists between the terminals.

   Float up (switch off): No continuity

   (4) Use syphon, etc., to take fluid out of the reservoir tank.
   (5) Check that the continuity exists between the terminals.

   Float down (switch on): Continuity

   (6) Pour the fluid back in the reservoir tank.

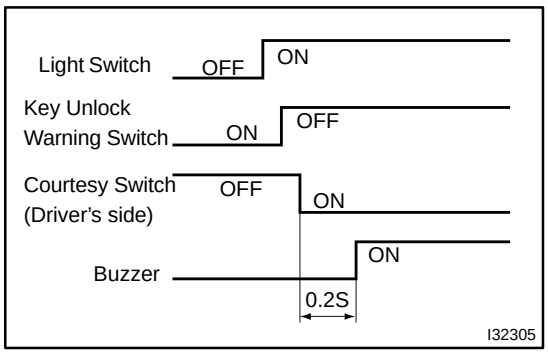

11. INSPECT LIGHT AUTO TURN OFF BUZZER

(a) Check the operation.

HINT:

When the key unlock warning and light auto turn off warning is output simultaneously, the key unlock warning precedes the other.

(1) Remove the ignition key with the tail light switch ON and the driver side door open and check for the buzzer.

Buzzer sound: Continuous

(2) While the buzzer is sounding, perform any of the following and check that the buzzer sound is stopped.

- Turn the tail light switch OFF.
- Close the driver side door.
- Insert the ignition key into the key cylinder.

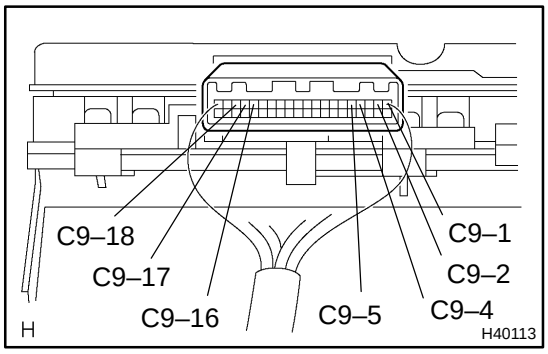

(b) Check the function.

(1) Remove the combination meter.

(2) Connect the position (+) lead from battery to terminal C9–5 and negative (–) lead to terminal C9–1 and C9–2.

(3) Connect the position (+) lead from battery to terminal C9–18 and negative (–) lead to terminal C9–16 and C9–17, check that the buzzer sound.

Buzzer sound: Continuous

(4) While the buzzer is sounding, connect the battery positive terminal to terminal C9–4 and check that the buzzer sound is stopped.

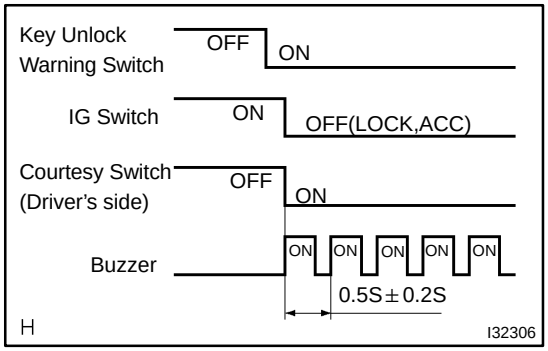

12. INSPECT KEY UNLOCK WARNING BUZZER

(a) Check the operation.

HINT:

When the key unlock warning and light auto turn off warning is output simultaneously, the key unlock warning precedes the other.

(1) While the driver side door is open, insert the ignition key, set the ignition switch to OFF (LOCK or ACC) and check for the buzzer sound.

Buzzer sound: Intermittent

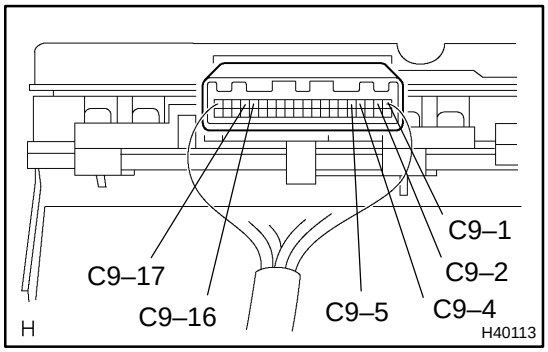

(b) Check the function.

(1) Remove the combination meter.

(2) Connect the position (+) lead from battery to terminal C9–5 and negative (–) lead to terminal C9–1 and C9–2.

(3) Connect the negative (–) lead to terminal C9–16 and C9–17, check that the buzzer sound.

Buzzer sound: Intermittent

(4) While the buzzer is sounding, connect the battery positive terminal to terminal C9–4 and check that the buzzer sound is stopped.

COMBINATION METER

7108N–03

PROBLEM SYMPTOMS TABLE

Warning Lights:

Symptom	Suspect Area	See page
Check Engine warning light does not light up.	1. Wire Harness or Connector 2. ECM 3. Combination Meter Assy	– 05–1 –
Discharge warning light does not light up.	1. Wire Harness or Connector 2. ECM 3. Combination Meter Assy	– 05–1 –
Brake warning light does not light up.	1. Wire Harness or Connector 2. Brake Actuator Assy 3. Combination Meter Assy	– 05–294 –
ABS warning light does not light up.	1. Wire Harness or Connector 2. Brake Actuator Assy 3. Combination Meter Assy	– 05–294 –
SRS warning light does not light up.	1. Wire Harness or Connector 2. Airbag Sensor Assy Center 3. Combination Meter Assy	– 05–421 –
Open Door warning light does not light up.	1. Wire Harness or Connector 2. Courtesy Lamp Switch 3. Combination Meter Assy	– 65–7 –
Fuel Level warning light does not light up.	1. Wire Harness or Connector 2. Fuel Sender Gage Assy 3. Combination Meter Assy	– 05–655 –
Low Oil Pressure warning light does not light up.	1. Wire Harness or Connector 2. Oil Pressure Switch Assy 3. Combination Meter Assy	– 71–2 –
Window washer level warning does not lights up	1. Wire Harness or Connector 2. Window washer level waring switch 3. Combination Meter Assy	– – –
Driver seat belt warning buzzer does not sound.	1. Driver Seat Belt Buckle Switch 2. Wire Harness or Connector 3. Combination Meter Assy	05–661 – –
Seat belt warning lamp for front passenger seat does not flash.	1. Front Seat Inner Belt Assy 2. Separate Type Front Seat Cushion Pad 3. Combination Meter Assy 4. Passenger Seat Belt Warning Light Assy	05–663 05–663 – –

Indicator Lights:

Symptom	Suspect Area	See page
Turn indicator light does not light up.	1. Wire Harness or Connector 2. Turn Signal and Hazard Warning System 3. Combination Meter Assy	– 65–7 –
High Beam indicator light does not light up.	1. Wire Harness or Connector 2. Headlight Dimmer Switch 3. Combination Meter Assy	– 65–7 –
O/D OFF indicator light does not light up.	1. Wire Harness or Connector 2. O/D Main Switch Circuit 3. ECM 4. Combination Meter Assy	– 05–417 – –

FRONT SEAT

COMPONENTS

7209X–01

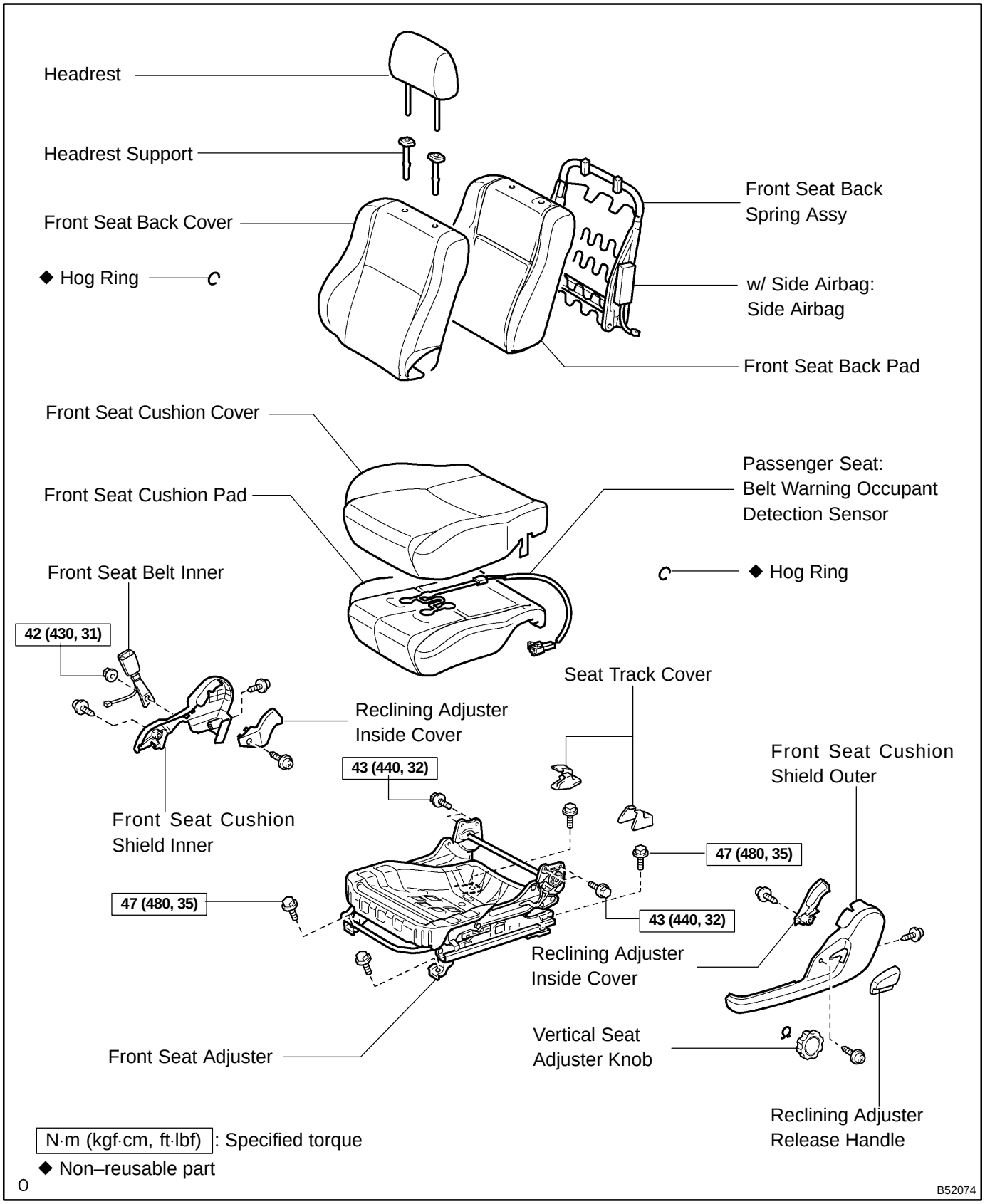

7209Y–01

OVERHAUL

CAUTION:

Wear the gloves, because the cutting surface of the seat back frame and seat adjuster may injure your hand.

HINT:

Tape the screwdriver tip before use when prying parts.

1. DISCONNECT BATTERY NEGATIVE TERMINAL

CAUTION:

Wait for 90 seconds after disconnecting the battery terminal and disconnect the airbag connector.

2. REMOVE FRONT SEAT

(a) Remove the headrest.

(b) Remove the seat track covers and 4 bolts.

(c) Slide the seat to the most rear position.

(d) Disconnect the connector(s) under the seat.

(e) Remove the seat.

NOTICE:

Be careful not to damage the body.

3. REMOVE SEPARATE TYPE FRONT SEAT BACK ASSY

(a) Remove the bolt, washer and seat belt inner.

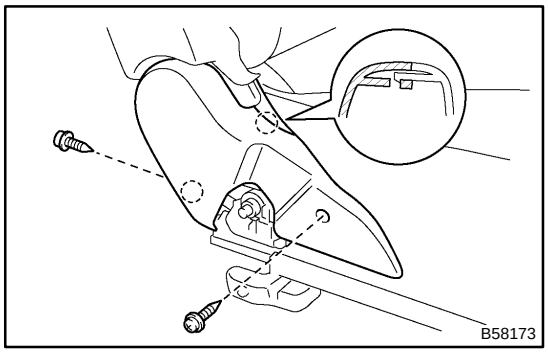

(b) Remove the seat cushion shield inner.

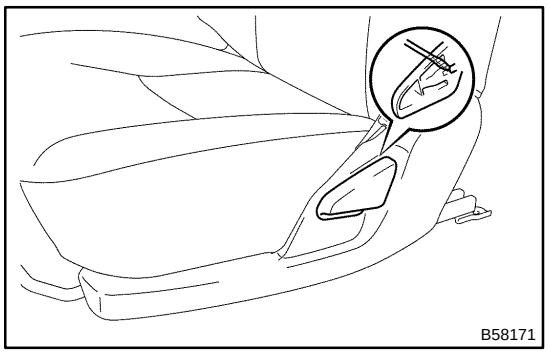

(c) Using a screwdriver, remove the reclining adjuster release handle.

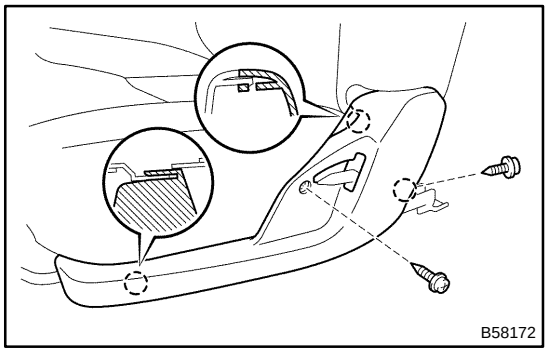

(d) Remove the seat cushion shield outer.

(e) w/ side airbag:
Disconnect the airbag wire under the seat.

(f) Remove the hog rings, 4 bolts and seat back.

4. REMOVE SEPARATE TYPE FRONT SEAT BACK COVER

(a) Remove the hog rings and turn up the seat back cover.

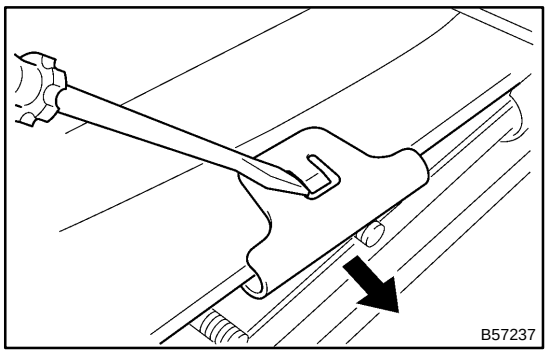

(b) w/ side airbag:
Using a screwdriver, disconnect the clip.
(c) Remove the headrest supports, seat back cover and seat back pad.

5. REMOVE SEPARATE TYPE FRONT SEAT CUSHION COVER
(a) Remove the hog rings, seat cushion cover and seat cushion pad.
6. REMOVE FRONT SEAT ADJUSTER
(a) Remove the reclining adjuster inside covers.
7. INSTALL FRONT SEAT ADJUSTER
(a) Install the reclining adjuster inside covers.
8. INSTALL SEPARATE TYPE FRONT SEAT CUSHION COVER
(a) Install the seat cushion pad to the seat adjuster.

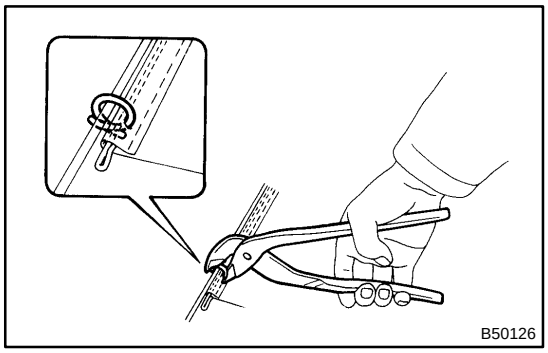

(b) Using hog ring pliers, install the seat cushion cover with new hog rings.

NOTICE:
- **Be careful not to damage the cover.**
- **Be careful to prevent the cover wrinkles as little as possible.**

9. INSTALL SEPARATE TYPE FRONT SEAT BACK COVER
(a) Install the seat back pad to the seat back spring assy.
(b) Cover the top of the seat back with the seat back cover.
(c) Install the headrest supports.

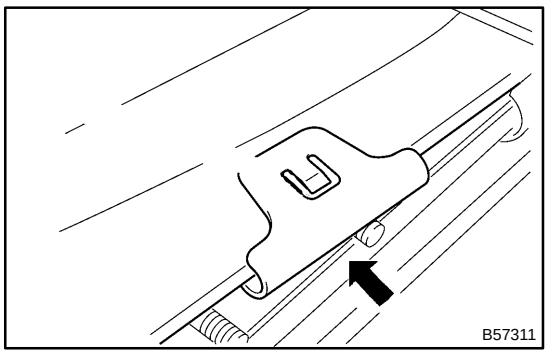

(d) w/ side airbag:
Connect the clip.
(e) Using hog ring pliers, fully install the seat back cover with new hog rings.

NOTICE:
- **Be careful not to damage the cover.**
- **Be careful to prevent the cover wrinkles as little as possible.**

10. INSTALL SEPARATE TYPE FRONT SEAT BACK ASSY
(a) Install the seat back with the 4 bolts.
Torque: 43 N·m (440 kgf·cm, 32 ft·lbf)
(b) Using hog ring pliers, install new hog rings.
(c) Install the cushion shield outer with the 2 screws.

(d) Install the vertical seat adjuster knob with the clip.
(e) Install the reclining adjuster release handle.
(f) Install the cushion shield inner with the 2 screws.
(g) Install the seat belt inner with the washer and bolt.
Torque: 42 N·m (430 kgf·cm, 31 ft·lbf)
(h) Check that the seat belt inner moves smoothly.

11. INSTALL FRONT SEAT

(a) Slide the seat to the most rear position.
(b) Place the seat on the cabin.

NOTICE:
Be careful not to damage the body.

(c) Connect the connector(s) under the seat.
(d) Install the front seat with the 4 bolts.
Torque: 47 N·m (480 kgf·cm, 35 ft·lbf)
(e) Install the seat track covers.
(f) Install the headrest.

REAR SEAT(SEDAN WITH SEPARATE TYPE)

7209Z–01

COMPONENTS

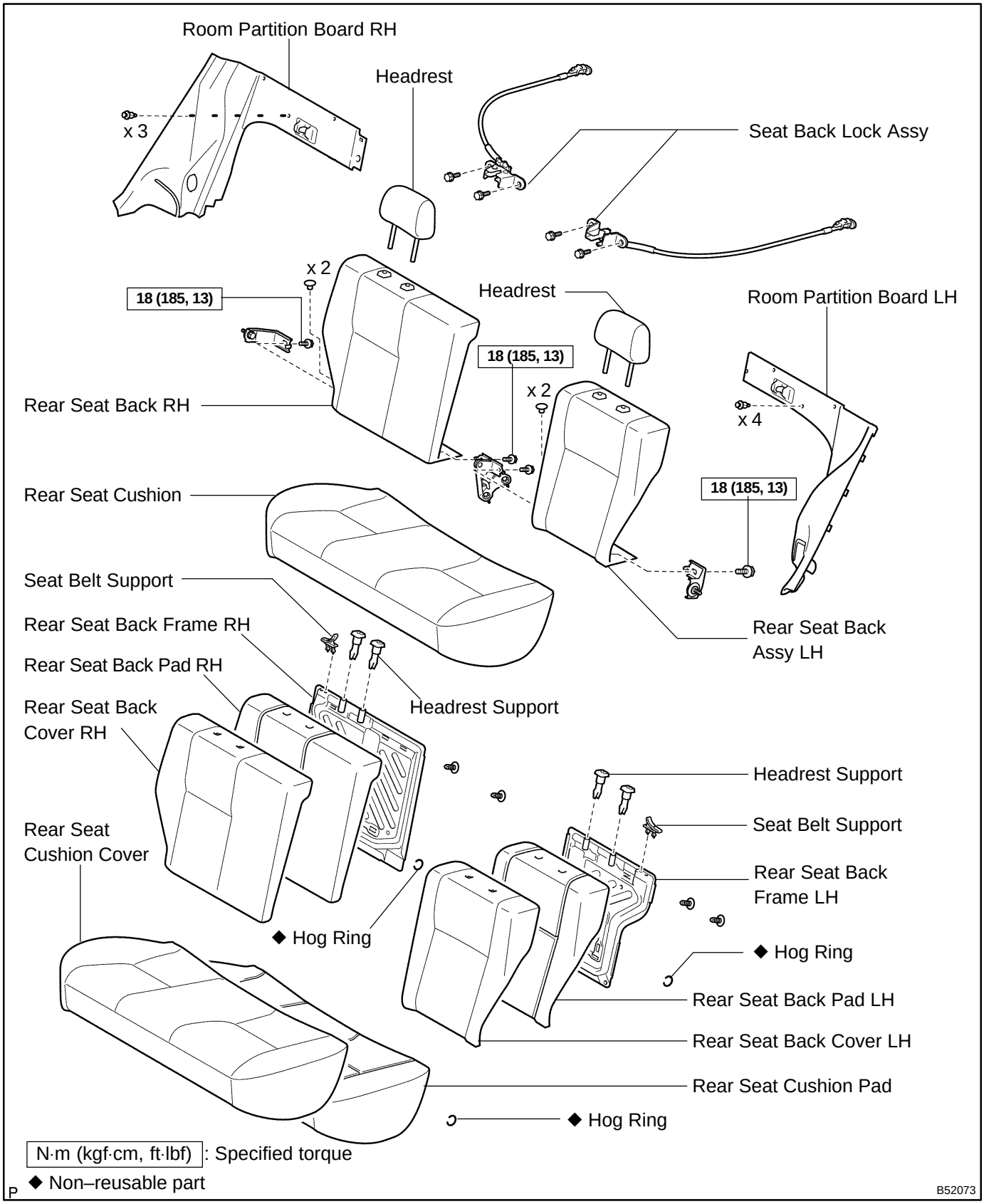

OVERHAUL

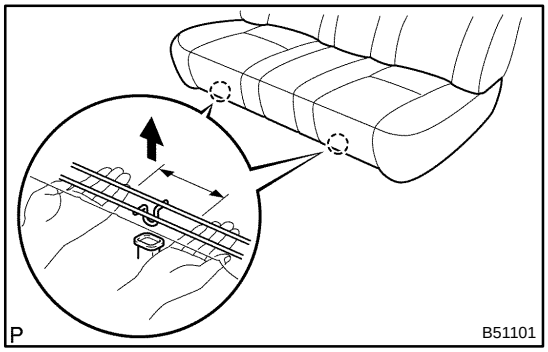

1. REMOVE BENCH TYPE REAR SEAT CUSHION ASSY

(a) Disengage the 2 clamps, and then remove the seat cushion.

2. REMOVE SEPARATE TYPE REAR SEAT BACK ASSY

(a) Lean the seat back forward.
(b) Remove the 2 clips.
(c) Remove the 2 bolts and seat back LH.
(d) Employ the same manner described above to the other side.

3. REMOVE BENCH TYPE REAR SEAT CUSHION COVER

(a) Remove the hog rings and seat cushion cover.

4. REMOVE SEPARATE TYPE REAR SEAT BACK COVER

(a) Remove the hog rings, and then turn up the seat back cover LH.
(b) Remove the headrest supports, seat back cover LH and seat back pad LH.
(c) Employ the same manner described above to the other side.

5. INSTALL SEPARATE TYPE REAR SEAT BACK COVER

(a) Install the seat back pad LH to the seat back frame LH.
(b) Cover the top of the seat back with the seat back cover LH.
(c) Install the headrest supports.
(d) Using hog ring pliers, fully install the seat back cover LH with new hog rings.
(e) Employ the same manner described above the other side.

6. INSTALL BENCH TYPE REAR SEAT CUSHION COVER

(a) Using hog ring pliers, install the seat cushion cover with new hog rings.

7. INSTALL SEPARATE TYPE REAR SEAT BACK ASSY

(a) Install the seat back LH with the 2 bolts and 2 clips.
Torque: 18 N·m (185 kgf·cm, 13 ft·lbf)
(b) Employ the same manner described above to the other side.

8. INSTALL BENCH TYPE REAR SEAT CUSHION ASSY

(a) Insert the seat cushion under the seat back.
(b) Engage the 2 clamps.

REAR SEAT ASSY (SEDAN WITH BENCH TYPE)

720A1–01

COMPONENTS

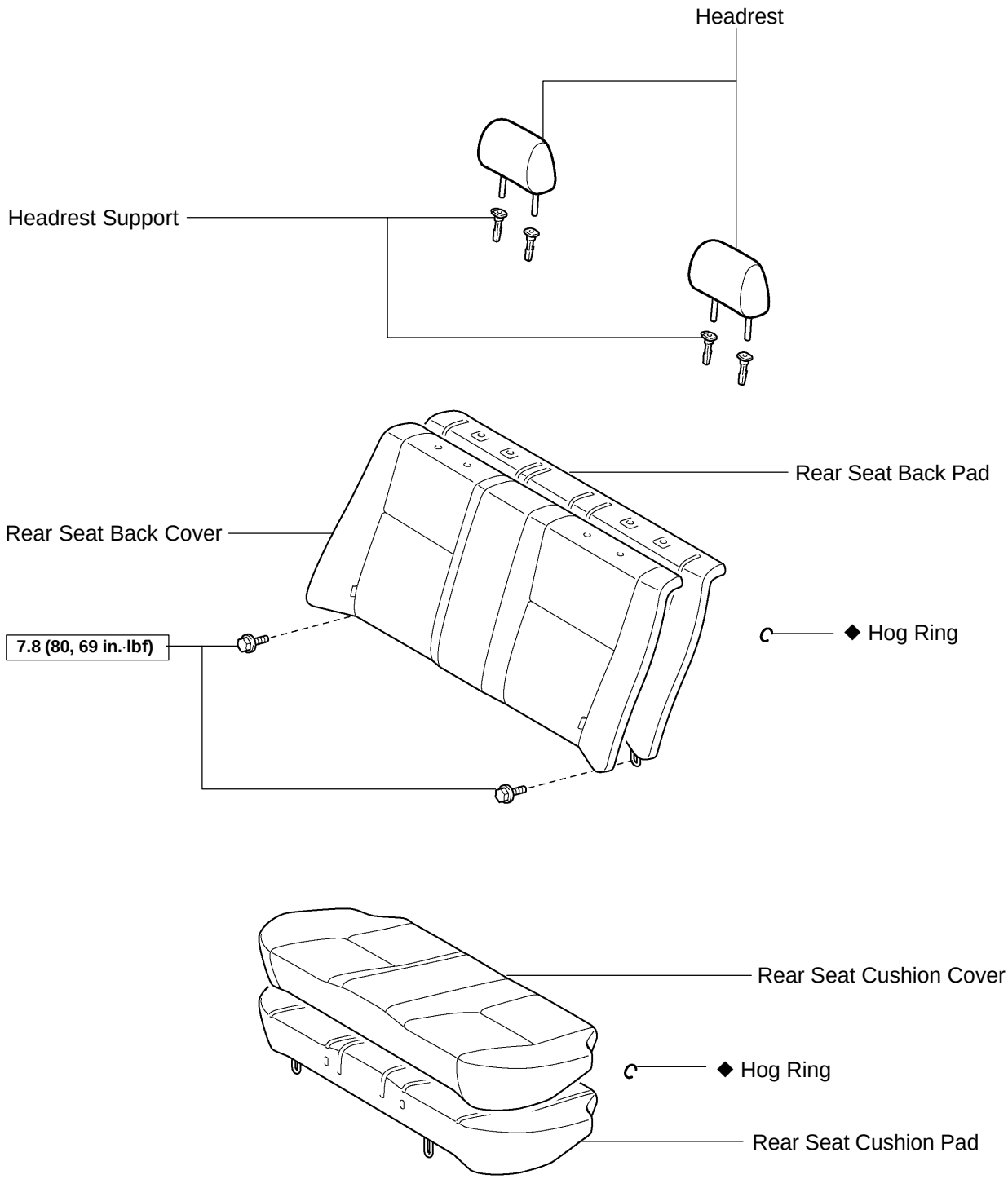

N·m (kgf·cm, ft·lbf) : Specified torque

◆ Non–reusable part

O

B52079

OVERHAUL

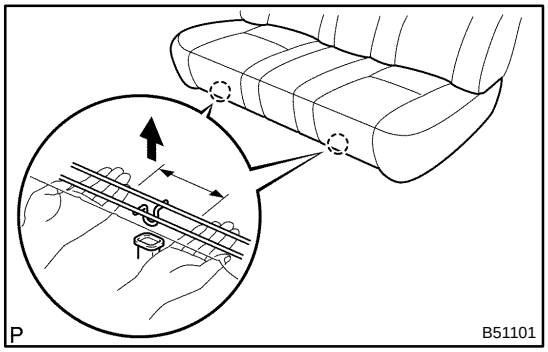

1. REMOVE BENCH TYPE REAR SEAT CUSHION ASSY

(a) Disengage the 2 clamps, and then remove the seat cushion.

2. REMOVE BENCH TYPE REAR SEAT BACK ASSY

(a) Remove the headrests.

(b) Remove the 2 bolts and seat back.

3. REMOVE BENCH TYPE REAR SEAT CUSHION COVER

(a) Remove the hog rings and seat cushion cover.

4. REMOVE BENCH TYPE REAR SEAT BACK COVER

(a) Remove the headrest supports.

(b) Remove the hog rings and seat back cover.

5. INSTALL BENCH TYPE REAR SEAT BACK COVER

(a) Cover the top of the seat back pad with the seat back cover.

(b) Install the headrest supports.

(c) Using hog ring pliers, fully install the seat back cover with new hog rings.

NOTICE:

- **Be careful not to damage the cover.**
- **Be careful to prevent the cover wrinkles as little as possible.**

6. INSTALL BENCH TYPE REAR SEAT CUSHION COVER

(a) Using hog ring pliers, install the seat cushion cover with new hog rings.

NOTICE:

- **Be careful not to damage the cover.**
- **Be careful to prevent the cover wrinkles as little as possible.**

7. INSTALL BENCH TYPE REAR SEAT BACK ASSY

(a) Hook the seat back to the body.

(b) Install the 2 bolts.

Torque: 7.8 N·m (80 kgf·cm, 69 in.·lbf)

8. INSTALL BENCH TYPE REAR SEAT CUSHION ASSY

(a) Insert the seat cushion under the seat back.

(b) Engage the 2 clamps.

730B5–01

INSPECTION

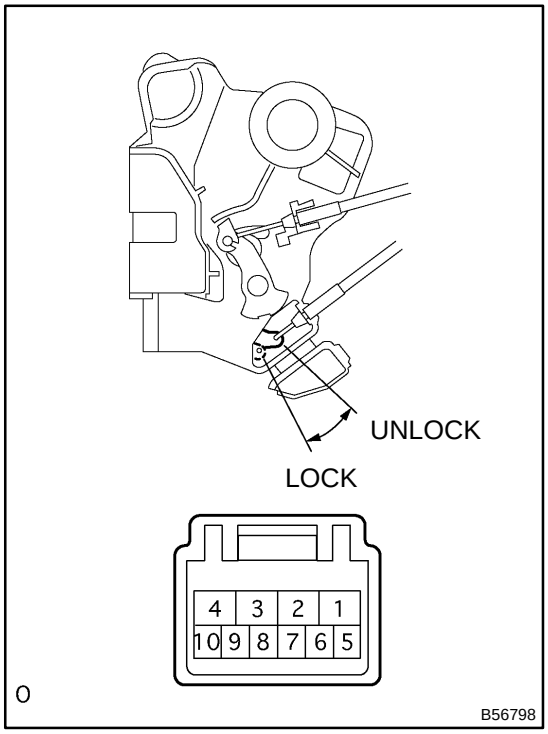

1. INSPECT DRIVER'S DOOR LOCK

(a) Inspect the door lock motor operation.

Standard:

Measuring condition	Operation
Battery positive (+) Terminal – 4 Battery negative (–) Terminal – 1	Lock
Battery positive (+) Terminal – 1 Battery negative (–) Terminal – 4	Unlock

If the result is not as specified, replace the door lock assembly.

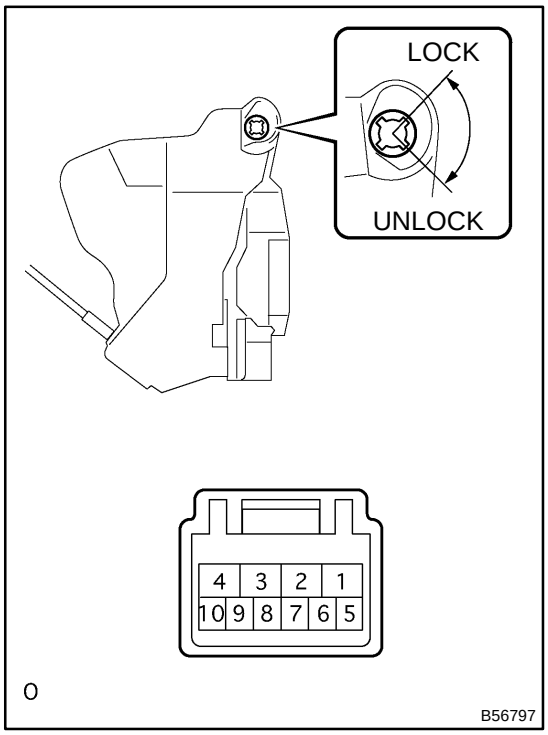

(b) Inspect the door lock and unlock switch continuity.

Standard:

Door lock position	Terminal No.	Specified condition
Lock	7 ⇔ 9	Continuity
OFF	–	–
Unlock	7 ⇔ 10	Continuity

If the result is not as specified, replace the door lock assembly.

(c) Inspect the position switch continuity.

Standard:

Door lock position	Terminal No.	Specified condition
Lock	7 ⇔ 8	No continuity
OFF	–	–
Unlock	7 ⇔ 8	Continuity

If the result is not as specified, replace the door lock assembly.

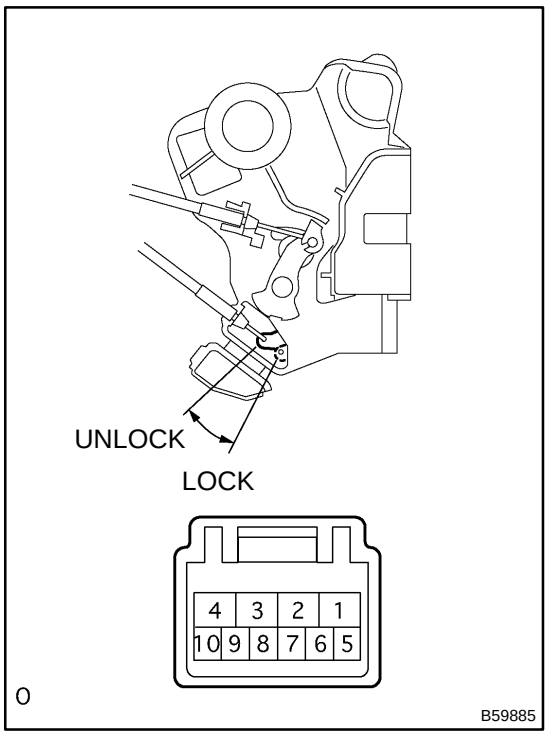

2. INSPECT PASSENGER'S DOOR LOCK

(a) Inspect the door lock motor operation.

Standard:

Measuring condition	Operation
Battery positive (+) Terminal – 4 Battery negative (–) Terminal – 1	Lock
Battery positive (+) Terminal – 1 Battery negative (–) Terminal – 4	Unlock

If the result is not as specified, replace the door lock assembly.

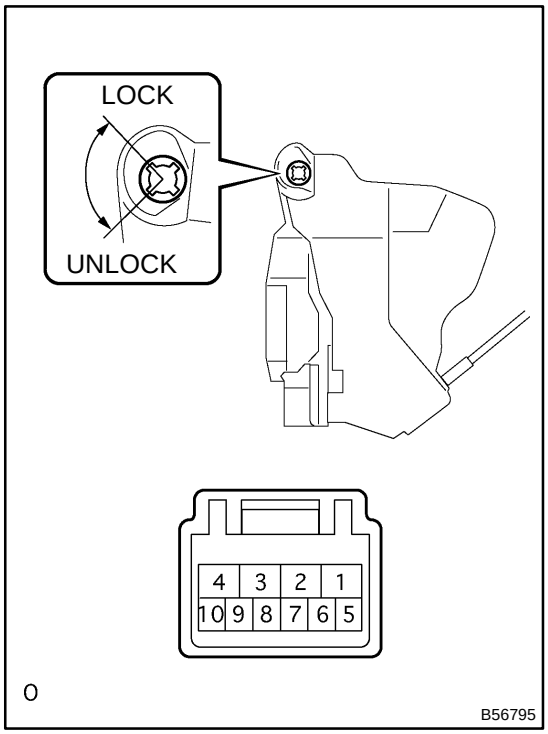

(b) Inspect the door lock and unlock switch continuity.

Standard:

Door lock position	Terminal No.	Specified condition
Lock	6 ⇔ 8	Continuity
OFF	–	–
Unlock	5 ⇔ 8	Continuity

If the result is not as specified, replace the door lock assembly.

(c) Inspect the position switch continuity.

Standard:

Door lock position	Terminal No.	Specified condition
Lock	7 ⇔ 8	No continuity
OFF	–	–
Unlock	7 ⇔ 8	Continuity

If the result is not as specified, replace the door lock assembly.

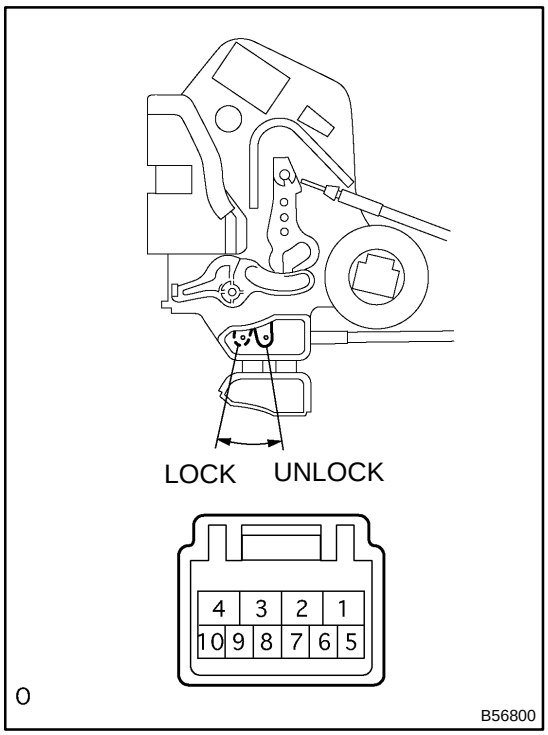

3. INSPECT REAR DOOR LOCK LH

(a) Inspect the door lock motor operation.

Standard:

Measuring condition	Operation
Battery positive (+) Terminal – 4 Battery negative (–) Terminal – 1	Lock
Battery positive (+) Terminal – 1 Battery negative (–) Terminal – 4	Unlock

If the result is not as specified, replace the door lock assembly.

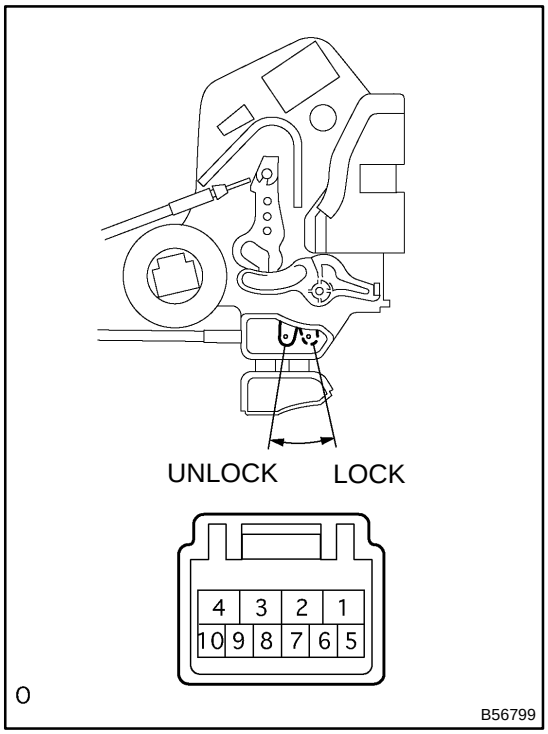

4. INSPECT REAR DOOR LOCK RH

(a) Inspect the door lock motor operation.

Standard:

Measuring condition	Operation
Battery positive (+) Terminal – 4 Battery negative (–) Terminal – 1	Lock
Battery positive (+) Terminal – 1 Battery negative (–) Terminal – 4	Unlock

If the result is not as specified, replace the door lock assembly.

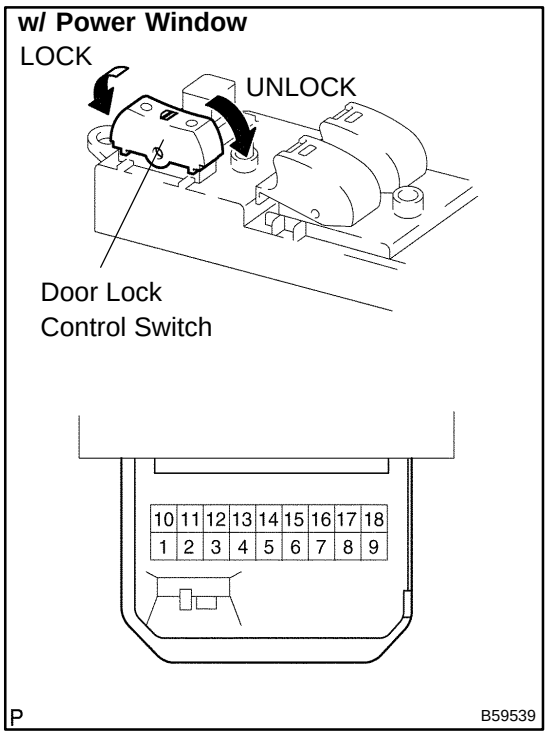

5. INSPECT POWER WINDOW REGULATOR MASTER SWITCH ASSY

(a) w/ Power window:

Inspect the door lock control switch continuity.

Standard:

Switch position	Terminal No.	Specified condition
Lock	1 ⇔ 3 ⇔ 5	Continuity
OFF	–	No continuity
Unlock	1 ⇔ 3 ⇔ 8	Continuity

If the result is not as specified, replace the switch.

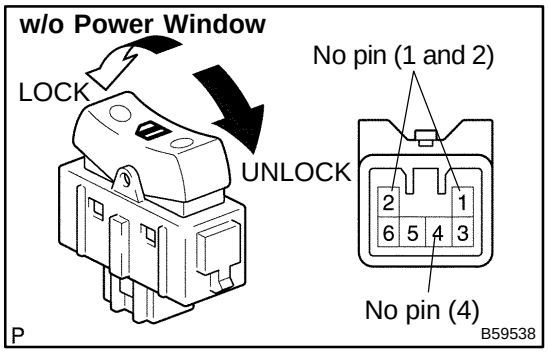

(b) w/o Power window:

Inspect the door lock control switch continuity.

Standard:

Switch position	Terminal No.	Specified condition
Lock	3 ⇔ 6	Continuity
OFF	–	No continuity
Unlock	3 ⇔ 5	Continuity

If the result is not as specified, replace the switch.

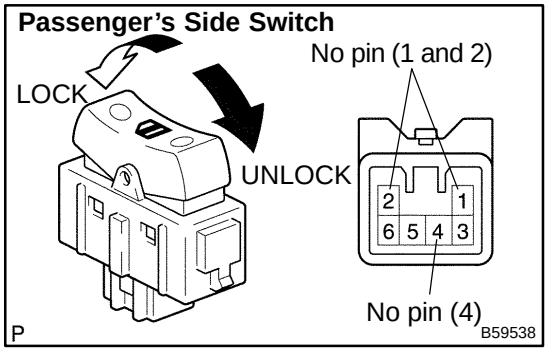

6. INSPECT DOOR CONTROL SWITCH ASSY

(a) Passenger's side switch:

Inspect the door lock control switch continuity.

Standard:

Switch position	Tester connection	Specified condition
Lock	3 ⇔ 6	Continuity
OFF	–	No continuity
Unlock	3 ⇔ 5	Continuity

If the result is not as specified, replace the switch.

POWER DOOR LOCK CONTROL SYSTEM

730B4–01

ON–VEHICLE INSPECTION

1. INSPECT FOR ELECTRICAL DOOR LOCK OPERATION

HINT:

- w/ Power window:
  The door control switch is built in the master switch in the driver's door and also in the passenger's door.
- w/o Power window:
  The door control switch is in the driver's door and also in the passenger's door.

(a) Check the basic function.

(1) Check that all the doors will lock when the door control switch (for manual operation) is turned to the lock side and all the doors will unlock when turned to the unlock side.

(2) Check that all the doors will lock when the driver's door lock key cylinder is turned to the lock side with the key.

(3) Check that all the doors will lock when the passenger's door lock key cylinder is turned to the lock side with the key.

(4) Check that only the driver's door will unlock when the driver's door lock key cylinder is turned to the unlock side and all the doors will unlock when turned to the unlock side once again within 3 seconds from the first unlocking operation, with the key (2–step unlocking function).

HINT:

The 2–step unlocking function is applicable to the driver's door lock key cylinder only.

(5) Check that all the doors will unlock when the passenger's door lock key cylinder is turned to the unlock side once with the key.

(b) Check the key confinement prevention function.

NOTICE:

In order to prevent the key from being confined, the inspection should be performed with the driver's door glass open.

(1) Insert the ignition key into the ignition key cylinder.

(2) With the driver's door open, check all the doors will immediately unlock when the door lock knob for the driver's door is turned to the lock side.

(3) With the driver's door open, check all the doors will immediately unlock when the door control switch (for manual operation) is turned to the lock side.

(4) With the driver's door open, lock the driver's door by holding the driver's door lock knob in the lock side for 2 seconds or more, and then close the driver's door. At this time, check that all the doors will unlock.

(c) Check the security function.

(1) Close all the doors with the driver's door glass open so that the door control switch (for manual operation) can be operated from the outside of the vehicle.

(2) Pull out the ignition key, open the driver's door, and close and lock the door with the door control switch (for manual operation). Under this condition, check that all the doors will not unlock when the door control switch (for manual operation) is turned to the unlock side from the outside of the vehicle.

(3) Pull out the ignition key, close and lock the driver's door by the key operation. Under this condition, check that all the doors will not unlock when the door control switch (for manual operation) is turned to the unlock side from the outside of the vehicle.

(4) Pull out the ignition key, close the driver's door and lock the door by the wireless door lock operation. Under this condition, check that all the doors will not unlock when the door control switch (for manual operation) is turned to the unlock side from the outside of the vehicle.

(5) Check that the security function will cancel when either of the following conditions is satisfied.
- The ignition switch turned ON
- The driver's door unlocked by the key operation
- The door control switch (for manual operation) turned to the unlock side after unlocking the door control knob manually
- The doors unlocked by the wireless operation (for wireless door lock models)

(d) Check the illuminated entry function.

(1) Check that the room light, ignition switch light and rear room light will light up when opening any of the doors and fade out in 15 seconds after closing the door.

(2) Check that the room light, ignition switch light and rear room light will fade out immediately when either of the following conditions is satisfied.
- All the doors closed and locked
- All the doors closed and the ignition switch turned ON or ACC

TRANSMITTER BATTERY

730B2–01

REPLACEMENT

1. REPLACE TRANSMITTER BATTERY

NOTICE:

Special caution should be taken for handling each component as they are precision electronic components.

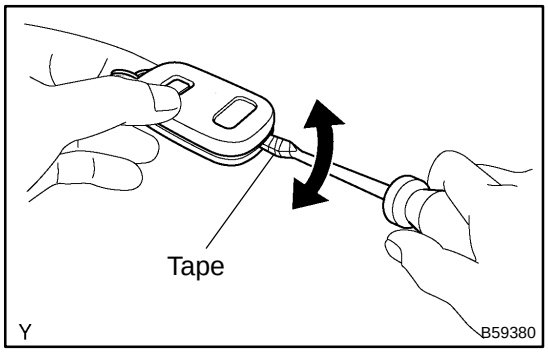

(a) Using a screwdriver, pry out the transmitter case.

NOTICE:

Do not forcibly pry out the case.

HINT:

Tape the screwdriver tip before use.

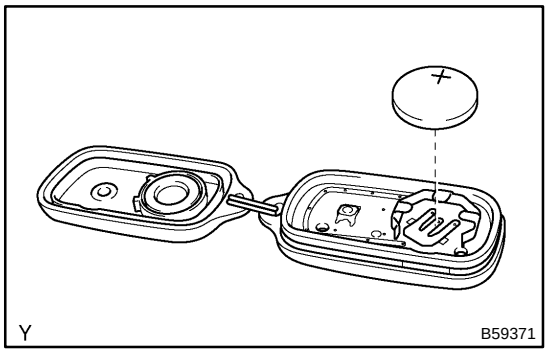

(b) Remove the battery (lithium battery).

NOTICE:

- **Do not push the terminals with your finger.**
- **Prying up the battery (lithium battery) to forcibly remove it will cause deformation of the terminals.**
- **Do not touch the battery with wet hands. Water may cause unexpected rust.**
- **Do not touch or move any components inside the transmitter as it may interfere with proper operation.**

2. INSTALL TRANSMITTER BATTERY

(a) Install a new battery (lithium battery) with the positive (+) side up, as shown in the illustration.

NOTICE:

- **Be sure that the positive side and the negative side of the transmitter battery are matched–up correctly.**
- **Be careful not to bend the electrode of the transmitter battery insertion.**
- **Be careful that dust or oil does not adhere to the transmitter case.**

(b) Install the case securely.

DOOR CONTROL TRANSMITTER

730B3–03

REGISTRATION

1. REGISTRATION OF RECOGNITION CODE

HINT:

- The add mode is used to retain the already registered codes while registering a new recognition code. This mode is used when adding a transmitter. If the number of the registered codes exceeds 4, the previously registered code will be correspondingly erased in order, starting from the first registered code.
- The rewrite mode is used to erase all the previously registered codes and register only new recognition codes. This mode is used when exchanging the transmitter or the door control receiver for new one.
- The prohibition mode is used to erase all the registered codes and cancel the wireless door lock function. Use this mode when the transmitter is lost.
- The confirmation mode is to confirm how many recognition codes have already been registered before an additional registration of a recognition code.
- All the following registration procedures must be performed in order continuously.

(a) The vehicle should be in the following conditions.
  (1) The key is not inserted in the ignition key cylinder.
  (2) Driver's door is OPENED. (The other doors are CLOSED)
  (3) Driver's door is UNLOCKED.

(b) Perform the following operations to select the desired mode.
  (1) Insert and remove the key from the ignition switch twice within 5 seconds.
  (2) After the above operations, close and open the driver door twice within 40 seconds. Then insert the key into the ignition key cylinder and remove it.
  (3) After the above operations, close and open the driver door twice within 40 seconds. Then insert the key into the ignition key cylinder and close the door.
  (4) Turn the ignition switch from LOCK to ON and back to LOCK at approximately 1 second interval 1 to 5 times to select a mode (see the table below). Then remove the key from the ignition key cylinder.

Number of ON–LOCK operation of ignition switch:

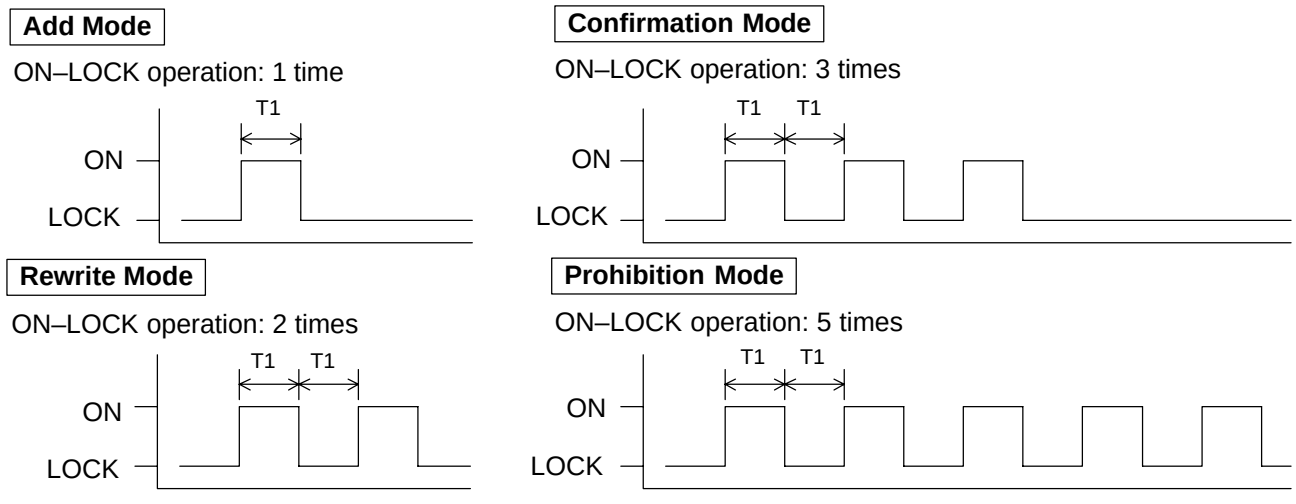

T1: Approx. 1 sec.

B58899

NOTICE:

If the number of the ON–LOCK operation of the ignition switch is 0, 4 or 6 or more, there will be no response (power door lock and unlock operation) to inform which mode has been selected.

(5) After selecting a mode, the integration relay automatically performs the power door LOCK–UNLOCK operation within 3 seconds to inform the selected mode (see the table below).

HINT:

- In the confirmation mode, when the operation is performed twice, it directs that 2 types of recognition codes have been registered.
- In the confirmation mode, If the number of the registration code is 0, the LOCK–UNLOCK operation is automatically performed 5 times.
- If the prohibition mode or confirmation mode is selected, registration procedure is completed.

Response of selected mode (Power door lock operation):

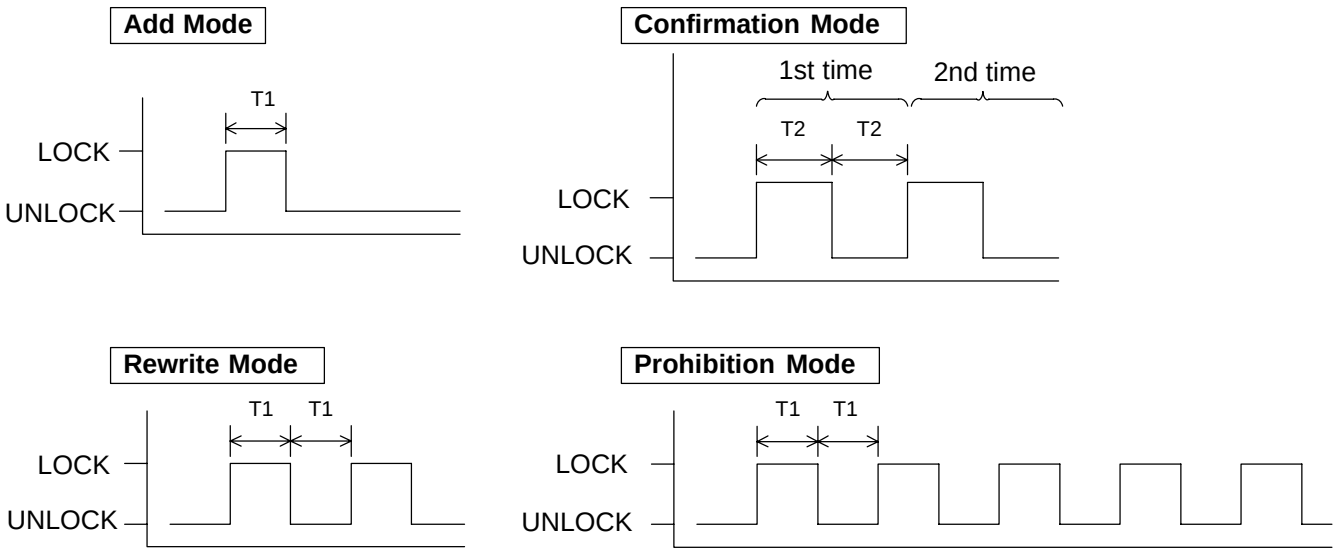

T1: Approx. 1 sec.
T2: Approx. 2 sec.

B50827

(c) Register the new recognition codes (Add mode or Rewrite mode):

(1) Within 40 seconds after the add mode or the rewrite mode has been selected, press the LOCK and UNLOCK switches on the transmitter switch simultaneously for 1.0 – 1.5 seconds.
Within 3 seconds after the previous operation, press either one of the switches for more than 1.0 seconds.

(2) Within 3 seconds after the transmitter switch has been turned OFF, the LOCK–UNLOCK operation will be automatically performed once if the registration of the recognition code of the transmitter is completed correctly. In case the LOCK–UNLOCK operation is performed twice, the registration of recognition code has failed. Perform the registration procedure from the beginning once again.

Response for registration completion:

LOCK–UNLOCK Occurs Once

Registration of recognition code has been completed.

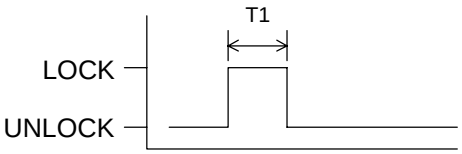

LOCK–UNLOCK Occurs Twice

Registration of recognition code has failed.

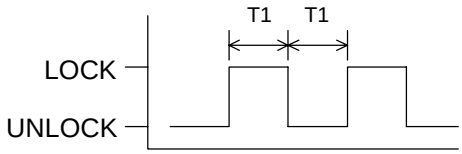

T1: Approx. 1 sec.

B58900

(3) If the multiple transmitter to be registered, repeat step (c) within 40 seconds after the previous registration.

HINT:

- 4 types of recognition codes can be registered at one time.
- If even one of the following conditions is satisfied, the registration mode will finish.
  - 40 seconds have elapsed while an input of each mode is ready.
  - Any of the doors is opened
  - The key plate is inserted in the ignition key cylinder.
  - 4 types of recognition codes are registered at once.

TOYOTA VEHICLE INTRUSION PROTECTION SYSTEM

730AV–01

ON–VEHICLE INSPECTION

1. OUTLINE OF TOYOTA VEHICLE INTRUSION PROTECTION (TVIP) SYSTEM

HINT:

The theft deterrent system has 2 modes; one is the active mode that is an initially set mode and another is the passive mode that can be switched ON/OFF by the specified method (See step 4).

(a) When the theft deterrent system detects any theft, the system will sound the horns and flash the lights to alert the people around the vehicle to the theft.

HINT:

Each mode (active and passive) has 4 states; disarmed state, arming preparation state, armed state, alarm sounding state.

(1) Disarmed state:
- The user is near the vehicle.
- The alarming function does not operate.
- The theft deterrent function does not operate.

(2) Arming preparation state:
- Time from the user locks a door to leave the vehicle.
- Time for transferring to the armed state.
- The theft deterrent function does not operate.

(3) Armed state:
- The user leaves the vehicle completely.
- The theft deterrent function operates.

(4) Alarm sounding state:

Once a theft is detected in the armed state, the system will sound the horns and flash the lights to alert the people around the vehicle to the theft.

Refer to the table for the alarming method and time.

Alarming method	Room Light	Illuminating (turn on)
	Headlight	Flashing at a cycle of approx. 0.4 sec.
	Hazard Warning Light	Flashing at a cycle of flasher relay
	Vehicle Horn	Sounding at a cycle of approx. 0.4 sec.
Alarming time	Approx. 60 sec.	

HINT:

In the alarm sounding state, when either of the front doors is unlocked and no key is inserted in the ignition key cylinder, forced door lock signal is output.

2. ACTIVE ARMING MODE

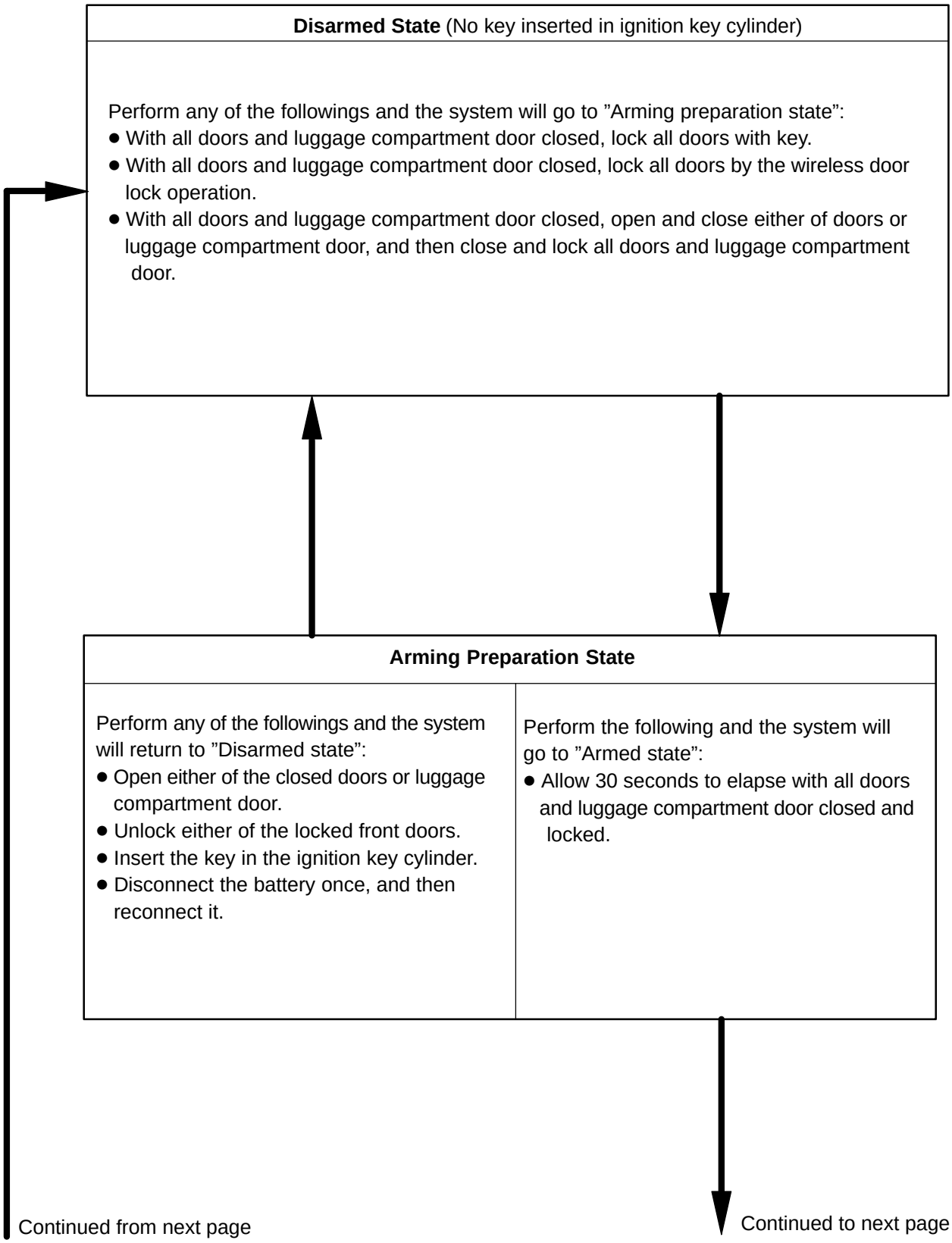

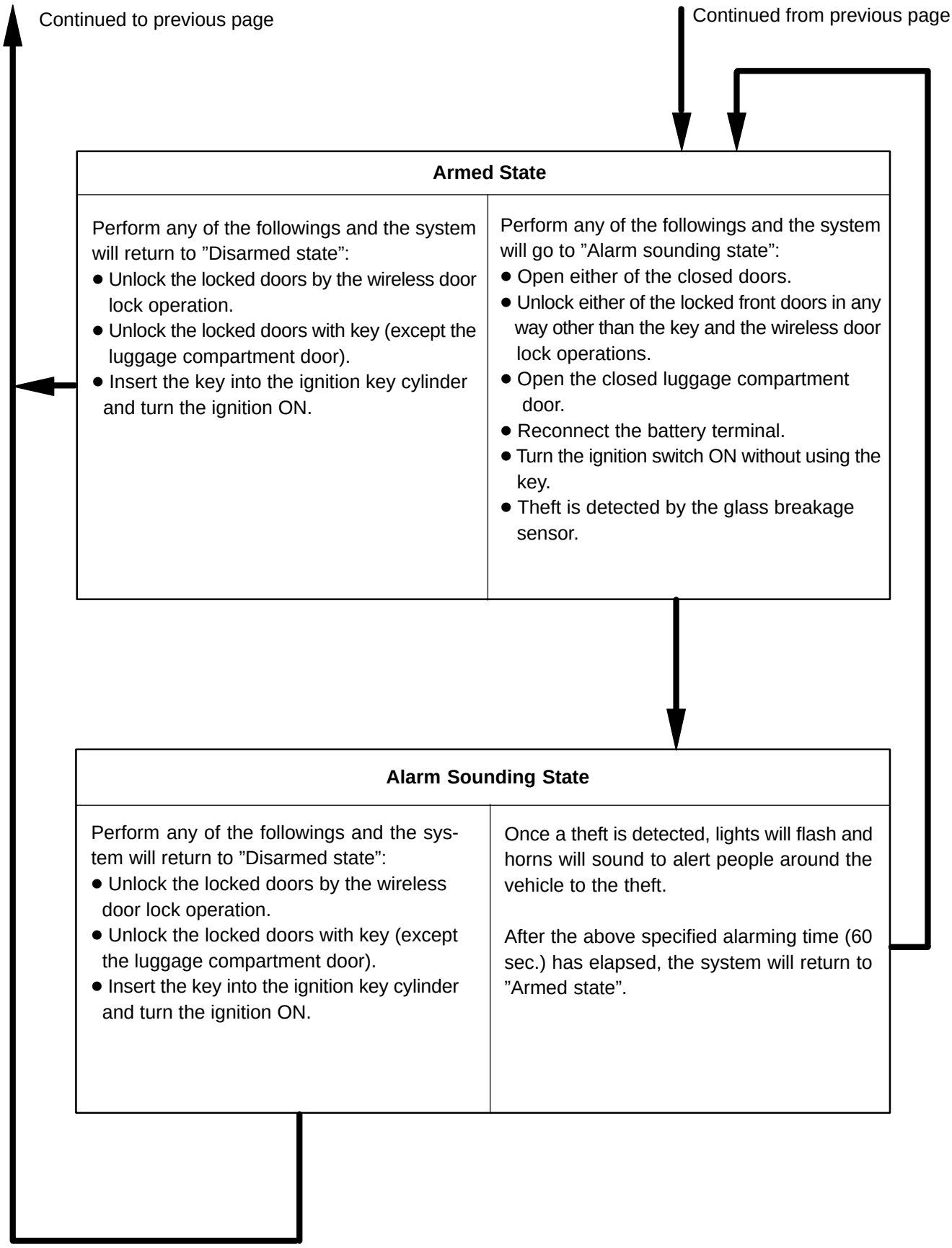
Continued to previous page
Continued from previous page
Armed State
Perform any of the followings and the system will return to ”Disarmed state”:
● Unlock the locked doors by the wireless door lock operation.
● Unlock the locked doors with key (except the luggage compartment door).
● Insert the key into the ignition key cylinder and turn the ignition ON.
Perform any of the followings and the system will go to ”Alarm sounding state”:
● Open either of the closed doors.
● Unlock either of the locked front doors in any way other than the key and the wireless door lock operations.
● Open the closed luggage compartment door.
● Reconnect the battery terminal.
● Turn the ignition switch ON without using the key.
● Theft is detected by the glass breakage sensor.
Alarm Sounding State
Perform any of the followings and the system will return to ”Disarmed state”:
● Unlock the locked doors by the wireless door lock operation.
● Unlock the locked doors with key (except the luggage compartment door).
● Insert the key into the ignition key cylinder and turn the ignition ON.
Once a theft is detected, lights will flash and horns will sound to alert people around the vehicle to the theft.
After the above specified alarming time (60 sec.) has elapsed, the system will return to ”Armed state”.

Indicator light output:

Condition	Indicator light
Disarmed state	OFF
Arming preparation state	ON
Armed state	BLINK
Alarm sounding state	ON

HINT:

Blinking frequency:

0.2 seconds (ON)

1.8 seconds (OFF)

3. PASSIVE ARMING MODE

- This mode can be switched according to the specified method (See step 4).
- Initially set mode (when shipped from factory) is the active mode (No passive mode).

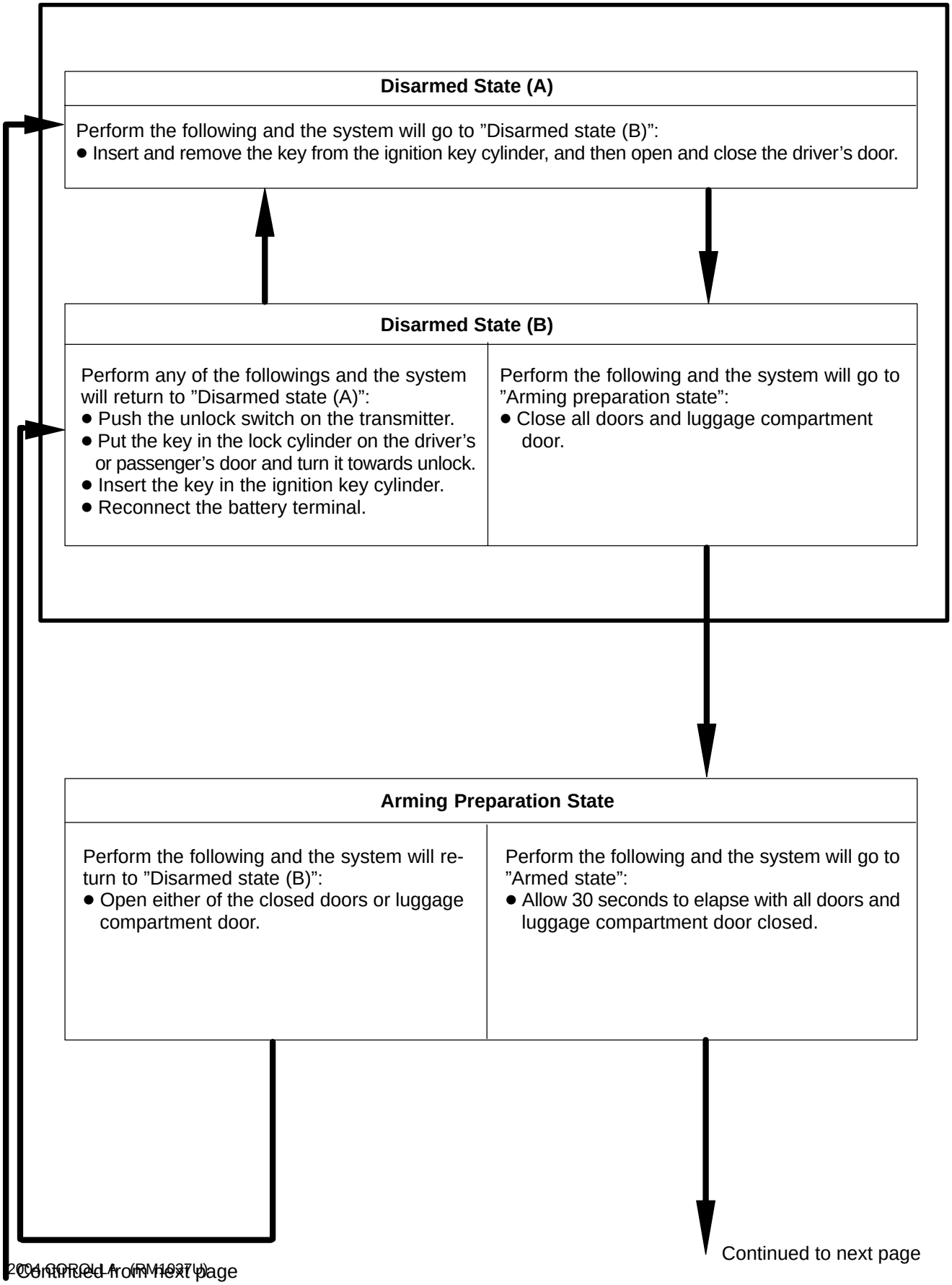

Continued to previous page

Continued from previous page

Armed State	
Perform any of the followings and the system will return to ”Disarmed state (A)”: ● Push the unlock switch on the transmitter. ● Put the key in the lock cylinder on the driver’s or passenger’s door and turn it towards unlock. ● Insert the key into the ignition key cylinder and turn the ignition ON.	Perform any of the followings and the system will go to ”Alarm sounding state”: ● Open either of the closed doors and allow the entry delay time*1 to pass. ● Open the closed luggage compartment door. ● Reconnect the battery terminal. ● Turn the ignition ON without using the key. *1: See the ”Entry delay function” on the next page

Alarm Sounding State	
Perform any of the followings and the system will return to ”Disarmed state (A)”: ● Push the unlock switch on the transmitter. ● Put the key in the lock cylinder on the driver’s or passenger’s door and turn it towards unlock. ● Insert the key into the ignition key cylinder and turn the ignition ON.	Perform the following and the system will return to ”Armed state”: ● The alarm sounding time (60 sec.) has elapsed.

Entry delay function:

HINT:

In the armed state, if either closed door is opened, entry delay time will start.

If the transferring condition (Armed state → Disarmed state) is satisfied during this entry delay time, the system will transfer to the disarmed state. However if the condition is not satisfied, the system will judge it to be a theft, and then the system will transfer to the alarm sounding state.

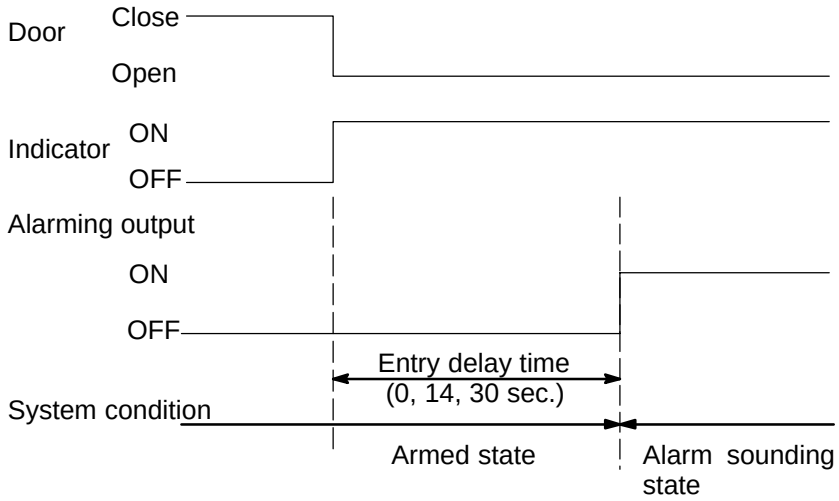

HINT:

The entry delay time can be selected among 0, 14, 30 seconds by the customizing function.

Indicator light output:

Condition	Indicator light
Disarmed state	OFF
Arming preparation state	ON
Armed state (Entry delay time)	BLINK (ON)
Alarm sounding state	ON

HINT:

Blinking frequency:

0.2 seconds (ON)

1.8 seconds (OFF)

Transfer to the active mode:

HINT:

In each state of the passive mode, when the transferring condition to the active mode (disarmed state of active mode → arming preparation state of active mode) is satisfied, the system will transfer to each state of the active mode. In this case, the active mode will continue until the system transfers to the disarmed state.

State of Passive Mode Before Transfer	State of Active Mode After Transfer
Disarmed state	Arming preparation state
Arming preparation state	Arming preparation state (continuing for 30 sec.)
Armed state (During entry delay time)	Armed state (After alarming time has elapsed, the system will transfer to the armed state)
Alarm sounding state	After alarming time has elapsed, the system will transfer to the armed state

4. CHANGING METHOD OF PASSIVE MODE (ON or OFF)

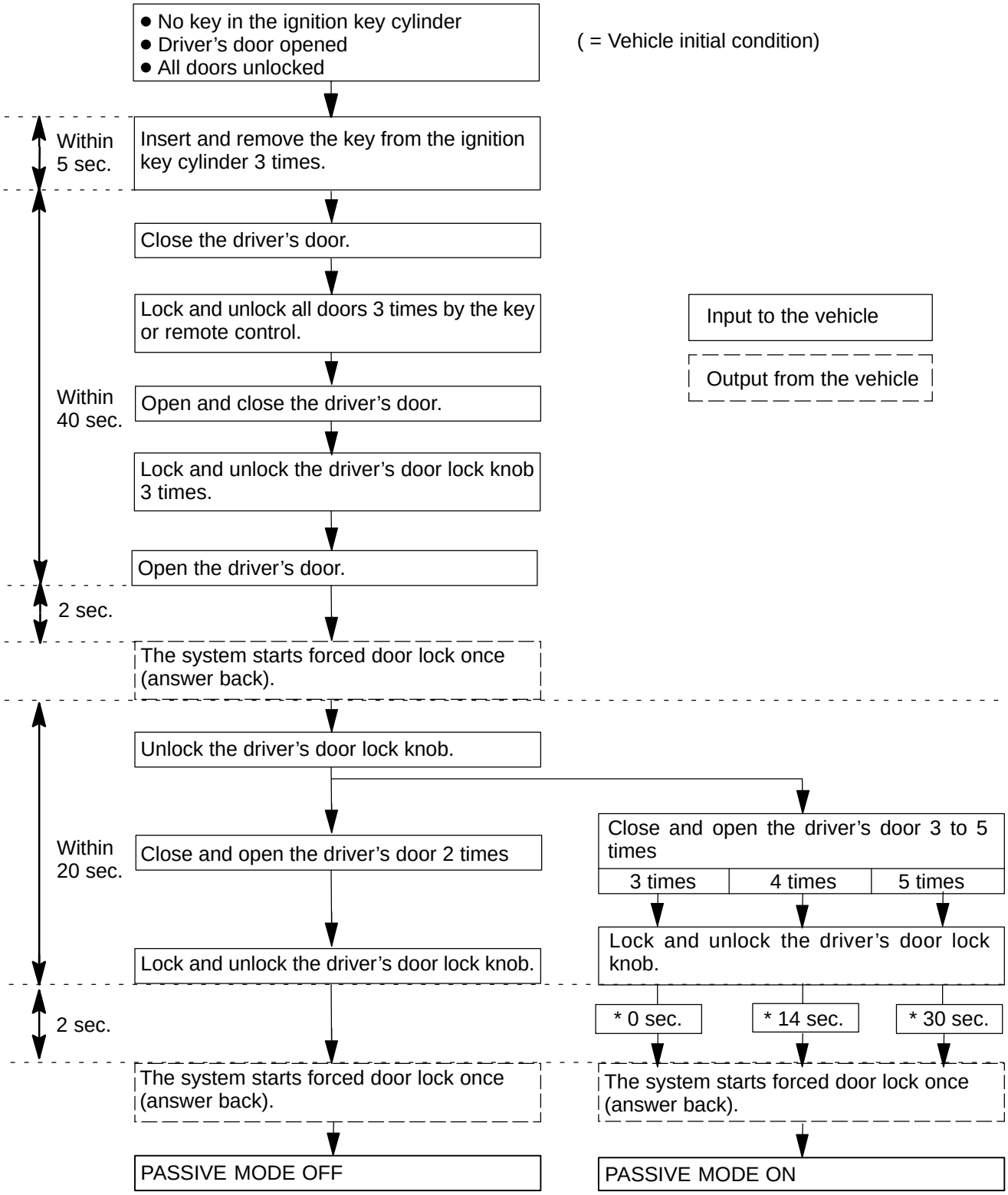

HINT:

- Initial mode is PASSIVE MODE OFF.
- If there is a different signal in the middle of changing, it is invalid.

*: Entry delay time

5. FORCED DOOR LOCK CONTROL

(a) Forced door lock is a control that prevents intrusion into vehicles. When a door is unlocked (when an alarm starts), instantaneously forced door lock will be executed.

(1) Condition to execute forced door lock:

Detecting any or all of the following conditions activates forced door lock.

- Theft deterrent system is in the alarm sounding state of the active mode.
- No key is in the ignition key cylinder.
- Any of the front doors is unlocked.
- Since the previous forced door lock, 0.38 seconds or more have elapsed.

(2) Conditions to stop forced door lock:

Detecting any of the following conditions stops forced door lock.

- All doors are locked.
- The alarm has finished.
- The key is inserted into the key cylinder.

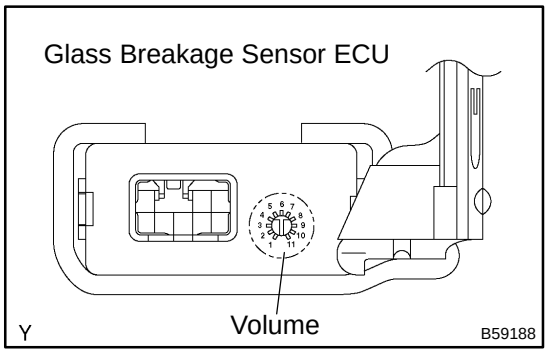

6. OPERATE GLASS BREAKAGE SENSOR

(a) If the glass breakage sensor detects the glass is broken (at 1st time), the sensor will issue an alarm for 20 seconds (pre–alarming). If the glass breakage sensor detects the glass is broken further more (at 2nd time), the sensor will issue an alarm for 60 seconds.

(b) The sensitivity of the glass breakage sensor can be adjusted by the volume switch in the glass breakage sensor ECU.

HINT:

Because the glass breakage sensor has a high sensitivity, it might issue a wrong alarm if it is adjusted in the volume of high sensitive.

730B1–02

ON–VEHICLE INSPECTION

1. INSPECT WIRELESS DOOR LOCK CONTROL FUNCTIONS

HINT:

- The switch described in this text is a switch for transmitting signals (LOCK switch, UNLOCK switch and PANIC switch) which is built into the door control transmitter.
- All the functions listed below must be checked in the remote control operational area.

(a) Put the vehicle under the conditions that allow the wireless control function to be operated (See PRECAUTION on page 73–7).

(b) Check the basic function.
  (1) Check that all the doors lock when the LOCK switch is pressed.
  (2) Check that only the driver side door unlocks when the UNLOCK switch is pressed once and the other doors unlock when the UNLOCK switch is pressed again within 3 seconds.

(c) Check the chattering prevention function.
  (1) Check that the corresponding operation occurs only once and is not repeated continuously while the switch is held. However, when the switch is operated repeatedly at 1 second intervals, check that the corresponding operation is carried out.

(d) Check the automatic lock function.
  (1) Check that all the doors lock automatically as long as none of them have been opened or all the doors have not been locked within approx. 30 seconds after they are unlocked by pressing the UNLOCK switch.
  (2) Check that the automatic locking function does not operate when any door has been opened or all of them have been locked within approx. 30 seconds after they are unlocked by pressing the UNLOCK switch.

(e) Check the switch operation fail–safe function.
  (1) Check that the doors can not be locked using the switch while the key is in the ignition key cylinder. However, this does not apply when the system is in the recognition code registration mode.

(f) Check the operation stop function when a door is open or not completely closed.
  (1) Check that the doors are not locked by the switch while any door is open or not completely closed. However, the glass hatch open operation is possible in this situation.

(g) Check the repeat function.
  (1) Check that all the doors attempt to automatically lock once again 1 second after the LOCK switch has been pressed while the movement of the driver side door control knob is being restricted while in the unlocked position.

(h) Check the hazard warning lamps flashing functions (answer–back).
  (1) When the LOCK switch is pressed, check that the lamps flash once with the locking of all the doors.
  (2) When the UNLOCK switch is pressed once, check that the lamps flash twice with the unlocking of the driver side door.
  (3) When the UNLOCK switch is pressed again within 3 seconds, check that the lamps flash twice with the unlocking of all the doors.

(i) Check the remote panic alarm function.
  (1) Check that the horn sounds, and the headlamps, the taillamps and the hazard warning lamps flash for 60 seconds by the theft alarm function when the PANIC switch is pressed. Also, check that the horn stops sounding and the lamps stop flashing when either switch of the transmitter is pressed once again.

(j) Check the illuminated entry function.
  (1) When all the doors are locked, pressing the UNLOCK switch causes the room lamp (when the lamp switch is in the DOOR position) to illuminate simultaneously with the unlock operation.
  (2) Check that the room lamp goes off in approx. 15 seconds if doors have not been opened.

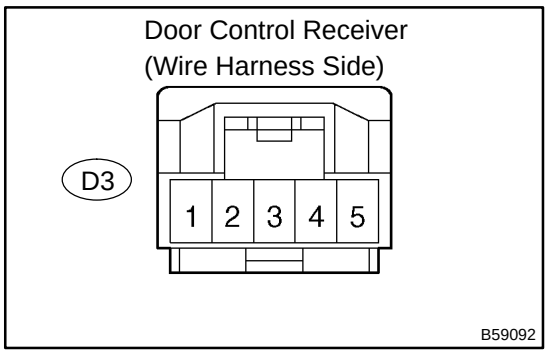

2. CHECK DOOR CONTROL RECEIVER

(a) Disconnect the D3 connector from the door control receiver.

(b) Check the continuity and voltage between the terminals of the door control receiver connector and the body ground, as shown in the illustration and table.

Standard:

Symbols (Terminal No.)	Specified condition
+B (D3– 5) – Body ground	10 – 14 V
GND (D3–1) – Body ground	Continuity

If the result is not as specified, there may be a malfunction on the wire harness side.

(c) Reconnect the connector and check the voltage between the terminal and body ground.

Standard:

Symbols (Terminal No.)	Condition	Specified Condition
RDA (D3–2) – Body ground	No key in ignition key cylinder, all doors closed and each transmitter switch OFF → ON	1 V or less → Approx. 6 – 7 V → 1 V or less

If the result is not as specified, the receiver may have a malfunction.

WIRELESS DOOR LOCK CONTROL SYSTEM

730B0–02

PRECAUTION

1. NOTICES WHEN CHECKING

(a) Power door LOCK/UNLOCK function:

The wireless remote control function operates only when the following 3 conditions are met.

(1) No key is inserted into the ignition key cylinder.

(2) All the doors are closed. However, doors can be unlocked even when any of the doors is opened.

(3) The power door lock system operates normally.

HINT:

- The UNLOCK function operates even when a door is open.
- The UNLOCK function operates even when the key is inserted into the ignition key cylinder, however it must be in the OFF position.

(b) Remote panic function:

The wireless remote control function operates only when the following condition is met.

(1) The ignition switch is OFF.

HINT:

The key can be inserted, however it must be in the OFF position.

(c) The wireless door lock remote control operational area differs depending on the situation.

(1) The operational area differs depending on the operators and the ways the transmitter is held.

(2) In certain areas, the remote control function will only operate partially for the operational area will be reduced due to the vehicle body shape and the influence of the surrounding environment.

(3) Since the transmitter uses faint electric waves, strong electric waves or noise in the frequency used may reduce the operational area or the remote control may not function.

(4) When the battery weakens, the operational area is reduced or the remote control may not function.

HINT:

If the door control transmitter has been left in a place that is exposed to direct sunlight, such as on the instrument panel, it may cause the battery to weaken or cause other such problems.

7405Q–02

INSPECTION

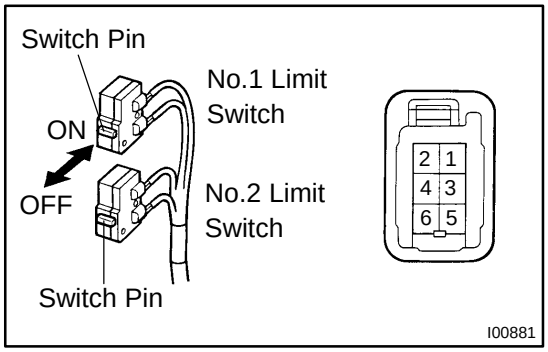

1. INSPECT SLIDING ROOF LIMIT SWITCH

(a) Inspect the sliding roof limit switch continuity.

Standard:

Switch position	Terminal No.	Specified condition
No.1 limit switch OFF (SW pin released)	4 – 5	No continuity
No.1 limit switch ON (SW pin pushed)	4 – 5	Continuity
No.2 limit switch OFF (SW pin released)	4 – 6	No continuity
No.2 limit switch ON (SW pin pushed)	4 – 6	Continuity

If the continuity is not as specified, replace the switch.

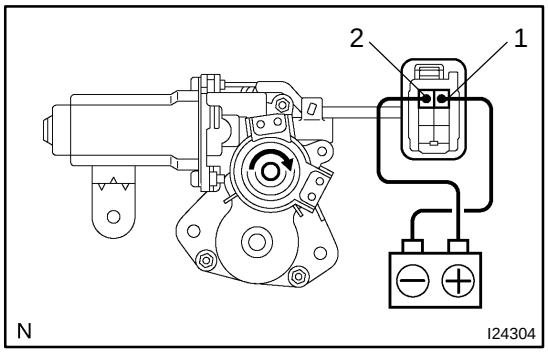

2. INSPECT SLIDING ROOF DRIVE GEAR SUB–ASSY

(a) Connect the positive (+) lead from the battery to terminal 2 and the negative (–) lead to terminal 1, and check that the motor turns clockwise (moves to the close side).

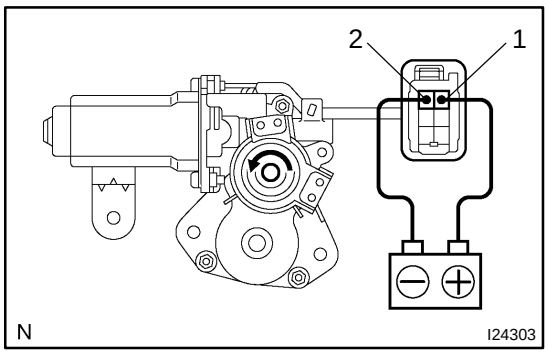

(b) Reverse the polarity, check that the motor turns counter-clockwise (moves to the open side).

If the operation is not as specified, replace the motor.

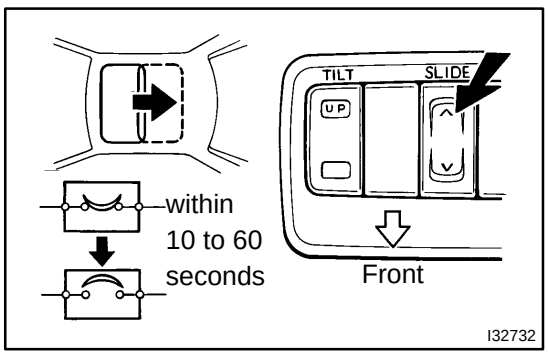

3. INSPECT SLIDING ROOF MOTOR CIRCUIT BREAKER

(a) With the sliding roof in the fully opened position, hold the sliding roof switch in the ”OPEN” side and check that there is circuit breaker operating noise within 10 to 60 seconds.

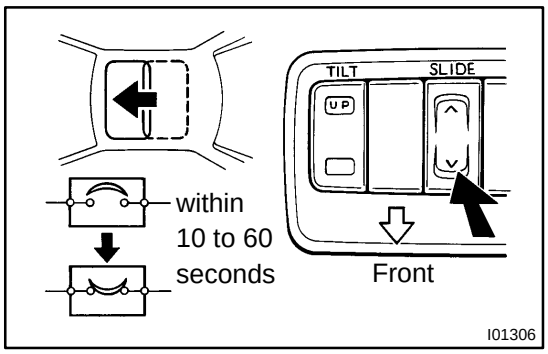

(b) With the sliding roof in the fully opened position, hold the sliding roof switch in the ”CLOSE” side and check that the sliding roof begins to close within 60 seconds.

If the operation is not as specified, replace the motor.

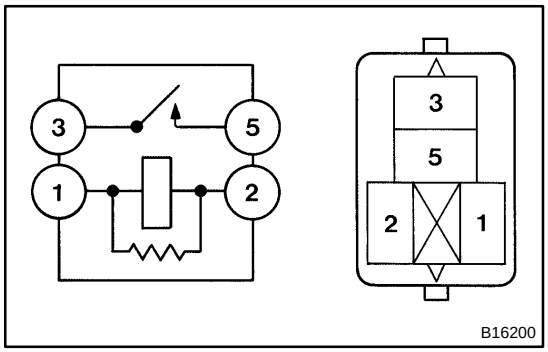

4. INSPECT POWER MAIN RELAY

(a) Remove the power window relay from the instrument panel J/B.

(b) Inspect the power window relay.

Standard:

Terminal No.	Condition	Specified condition
1 ⇔ 2	Constant	Continuity
3 ⇔ 5	Apply battery voltage between terminals 1 and 2	Continuity

If the result is not as specified, replace the relay.

7405O–02

ON–VEHICLE INSPECTION

1. INSPECT SLIDING ROOF FUNCTION

(a) Check the slide opening operation (Manual).
  (1) Turn the ignition switch ON.
  (2) When keeping operating the sliding roof switch to the OPEN side, check that the roof glass will slide and be fully opened.

(b) Check the slide closing operation (Manual).
  (1) Turn the ignition switch ON.
  (2) When keeping operating the slide roof switch to CLOSE side, check that the roof glass will slide but stop halfway.
  (3) When operating the sliding roof switch to the CLOSE side again after the above operation, check that the roof glass will slide again from the halfway position and be fully closed.

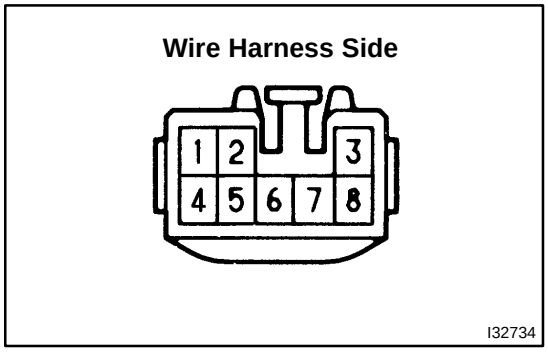

2. INSPECT SLIDING ROOF DRIVE GEAR

(a) Disconnect the connector from the relay and switch, and inspect the connector on the wire harness side, as shown in the chart.

Terminal No.	Condition	Specified condition
4 – 5	Constant	Continuity
8 – Body ground	Constant	Continuity
6 – Body ground	No.1 limit switch OFF (Sliding roof closed)	No continuity
6 – Body ground	No.1 limit switch ON (Sliding roof closed)	Continuity
7 – Body ground	No.2 limit switch OFF (Sliding roof tilted up open approx. 200 mm (7.87 in.))	No continuity
7 – Body ground	No.2 limit switch ON (Except for conditions mentioned above)	Continuity
2 – Body ground	Ignition switch LOCK or ACC	* No voltage
2 – Body ground	Ignition switch ON	Battery positive voltage

* Exceptions:
For 60 seconds after the ignition switch ON → OFF (ACC) or until the driver or passenger door is opened after the ignition switch ON → OFF (ACC).
If the result is not as specified, replace the relay.

SLIDING ROOF SYSTEM

LOCATION

7405N–02

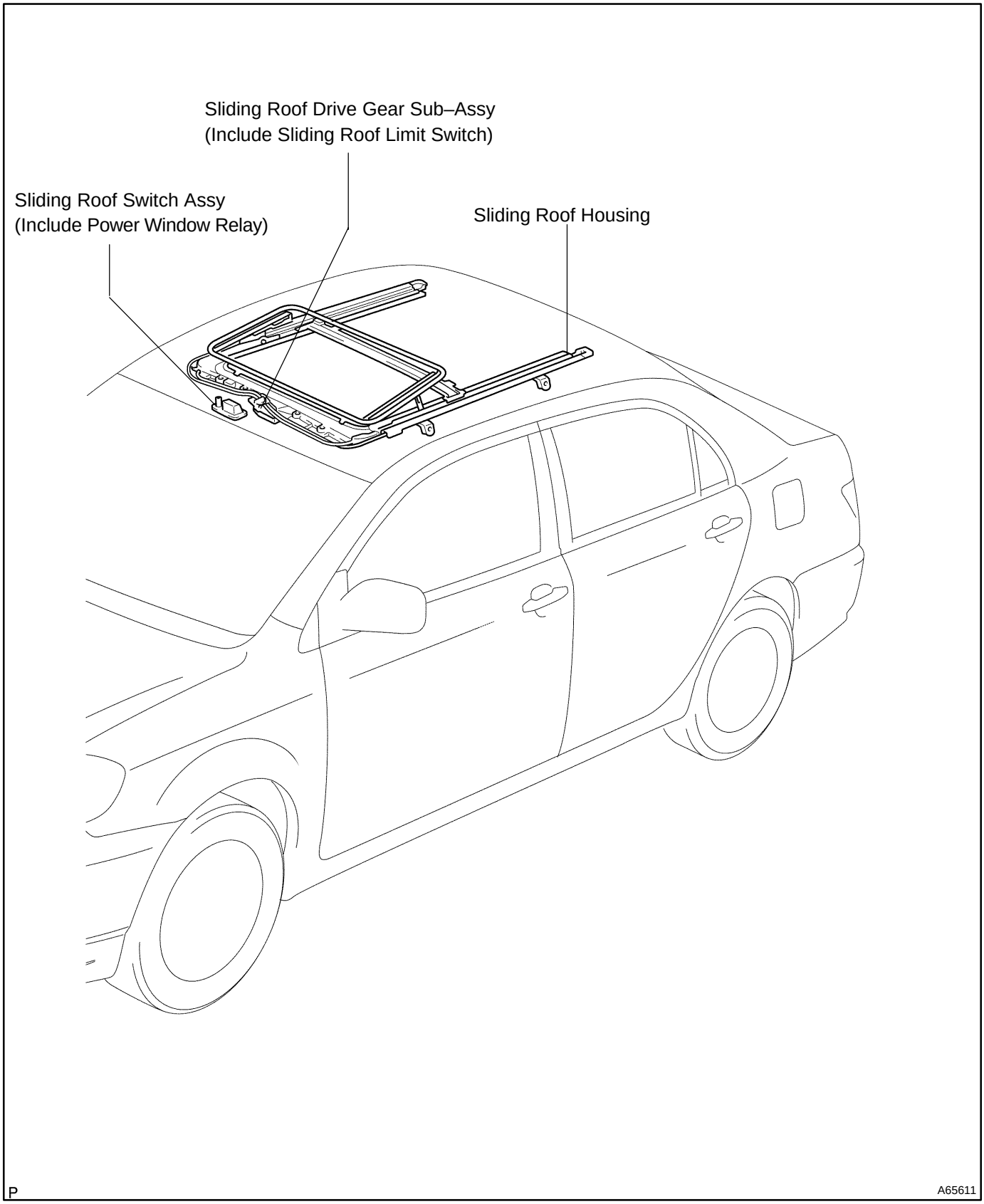

SLIDING ROOF

COMPONENTS

7405R–02

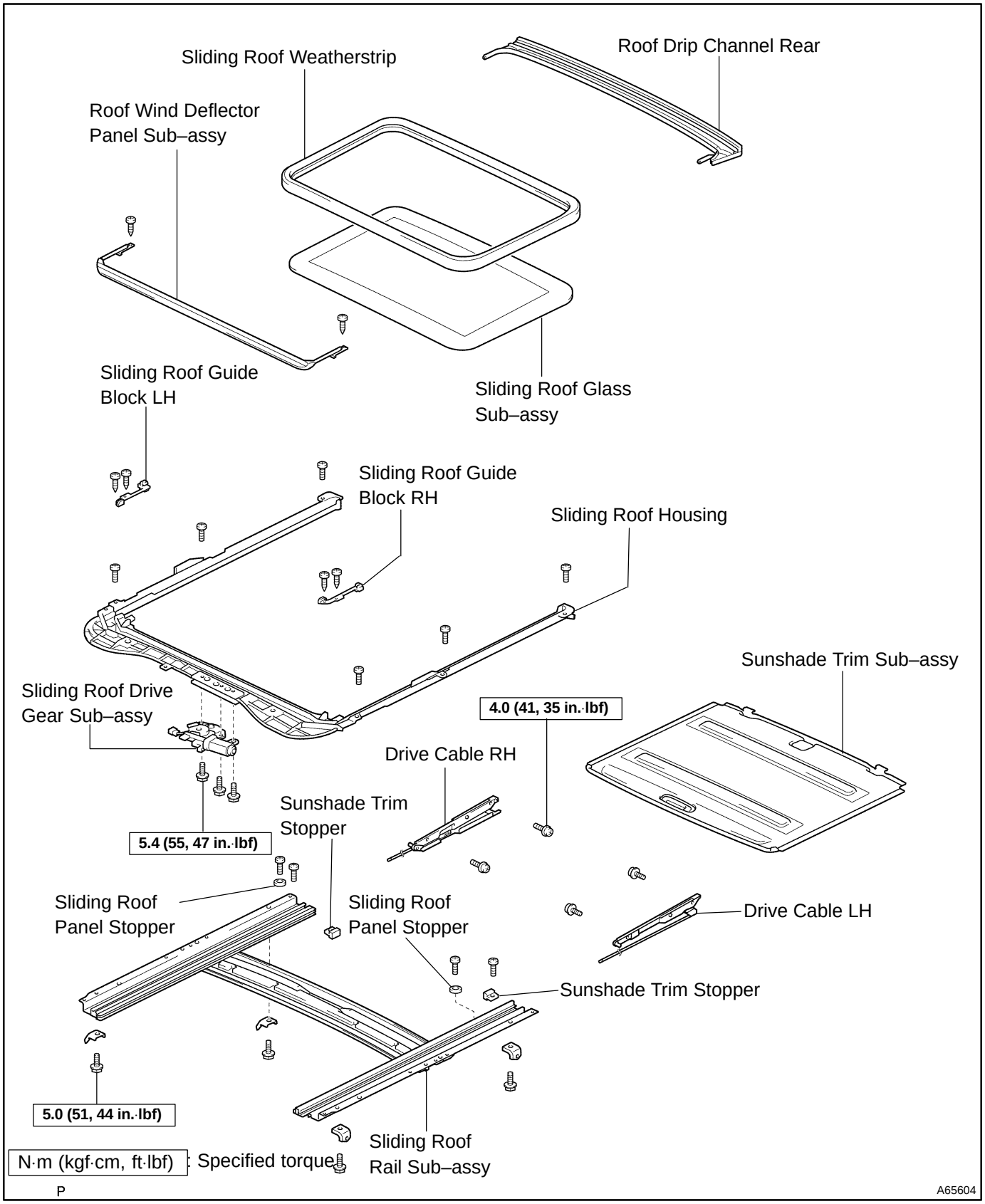

OVERHAUL

1. REMOVE ROOF HEADLINING ASSY (See page 76–21)

2. REMOVE SLIDING ROOF GLASS SUB–ASSY

(a) Using a torx wrench (T25), remove the 4 screws the sliding roof glass.

(b) Pull the glass upward to remove it.

3. REMOVE SLIDING ROOF WEATHERSTRIP

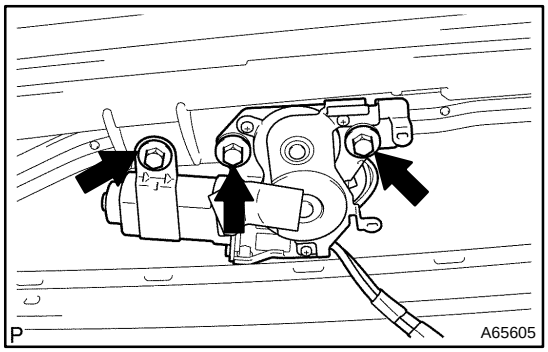

4. REMOVE SLIDING ROOF DRIVE GEAR SUB–ASSY

NOTICE:

Remove the drive gear with the sliding roof fully closed.

(a) Disconnect the connector.

(b) Remove the 3 bolts and drive gear.

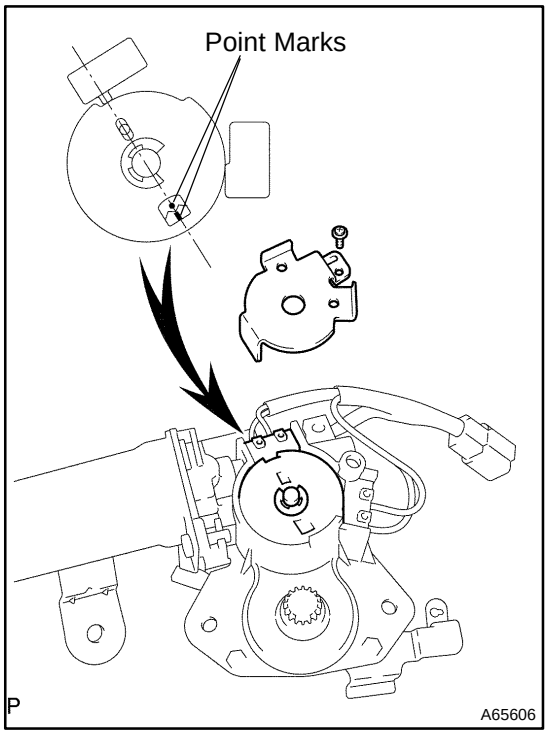

(c) Remove the screw and cam plate cover.

(d) Turn the drive gear to align the point marks, as shown in the illustration.

(e) Install the cam plate cover and screw.

NOTICE:

At the time of installation, if the sliding roof position and drive gear fully closed position are not aligned, the sliding roof does not operate normally.

5. REMOVE SLIDING ROOF HOUSING ASSY

(a) Disconnect the 4 drain hoses from the housing.
(b) Remove the 8 bolts and 4 brackets.
(c) Remove the 6 nuts and housing.

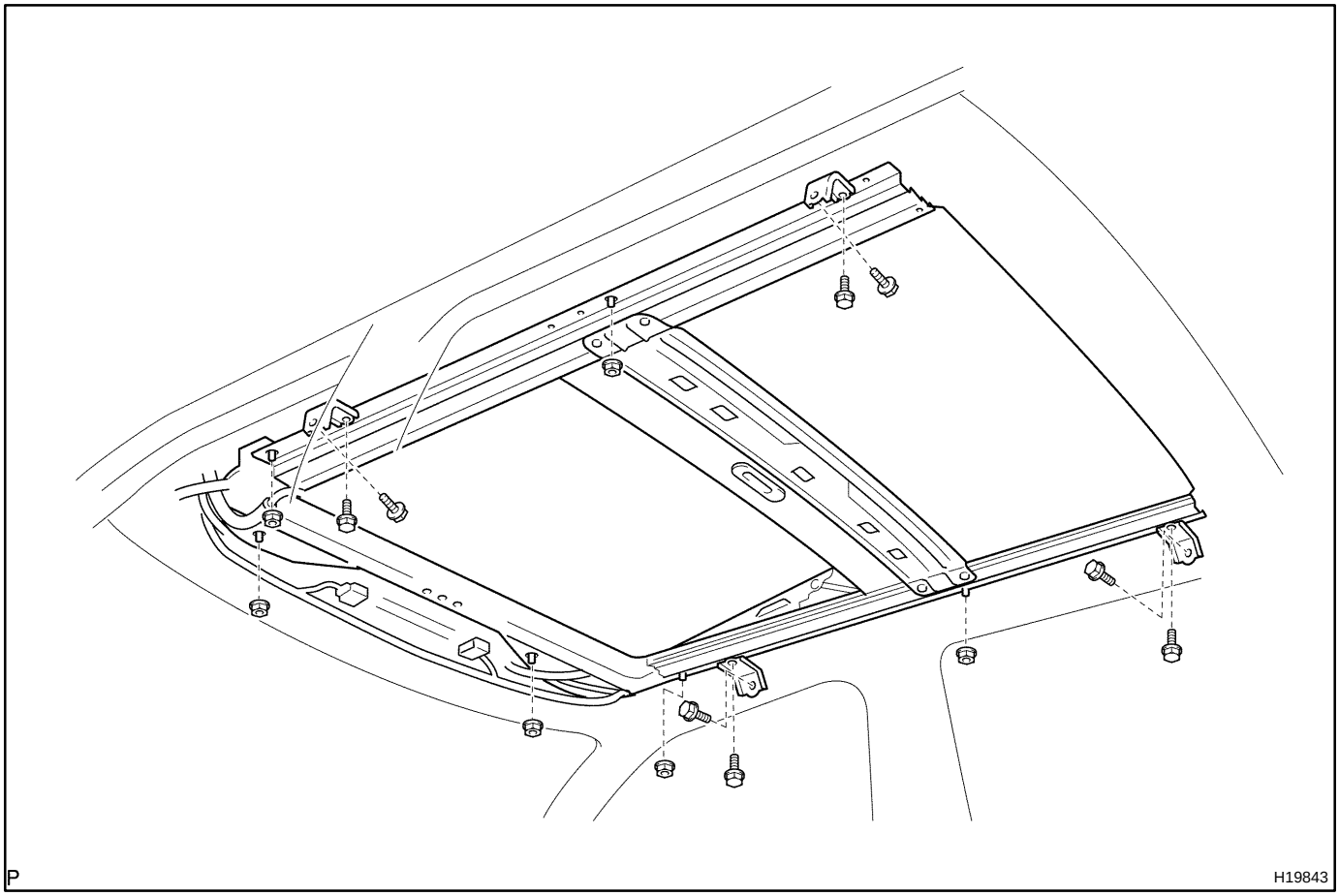

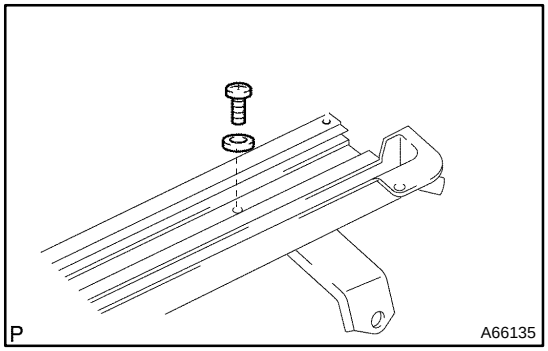

6. REMOVE SLIDING ROOF PANEL STOPPER

(a) Remove the 2 screws and 2 stoppers.

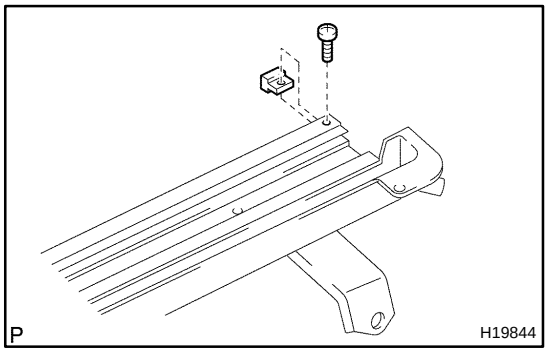

7. REMOVE SUNSHADE TRIM SUB–ASSY

(a) Remove the 2 screws and 2 stoppers.
(b) Sliding the sunshade trim backward, remove it.

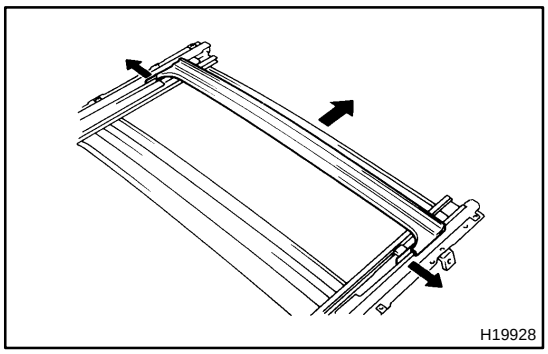

8. REMOVE ROOF DRIP CHANNEL REAR

(a) Remove the roof drip channel rear as shown in the illustration.

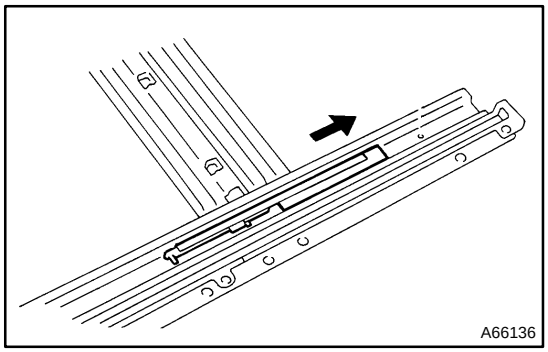

9. REMOVE SLIDING ROOF DRIVE CABLE LH

(a) Sliding the drive cable backward, remove it.

10. REMOVE SLIDING ROOF DRIVE CABLE RH

(a) Sliding the drive cable backward, remove it.

11. REMOVE ROOF WIND DEFLECTOR PANEL SUB–ASSY

(a) Remove the 2 screws and roof wind deflector panel.

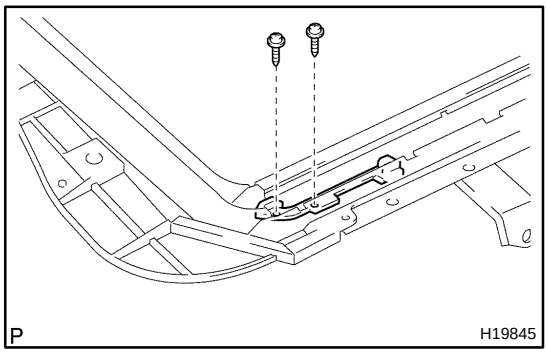

12. REMOVE SLIDING ROOF GUIDE BLOCK LH

(a) Remove the 2 screws and guide block.

13. REMOVE SLIDING ROOF GUIDE BLOCK RH

(a) Remove the 2 screws and guide block.

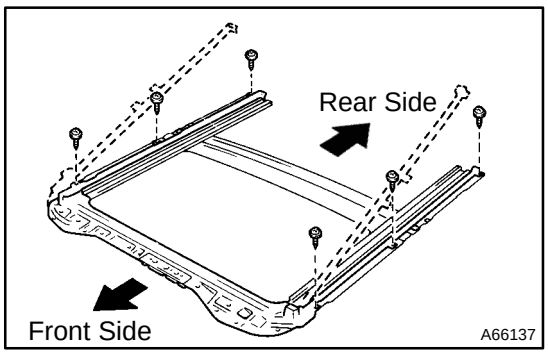

14. REMOVE SLIDE ROOF RAIL SUB–ASSY

(a) Remove the 6 screws and sliding roof housing.

15. INSTALL SLIDE ROOF RAIL SUB–ASSY

(a) Install the sliding roof housing with the 6 screws.

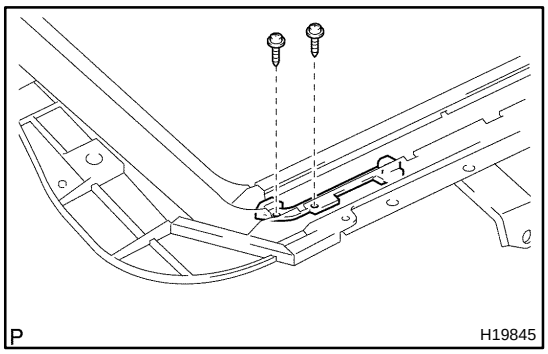

16. INSTALL SLIDING ROOF GUIDE BLOCK LH

(a) Install the guide block with the 2 screws.

17. INSTALL SLIDING ROOF GUIDE BLOCK RH

(a) Install the guide block with the 2 screws.

18. INSTALL ROOF WIND DEFLECTOR PANEL SUB–ASSY

(a) Install the roof deflector panel with the 2 screws.

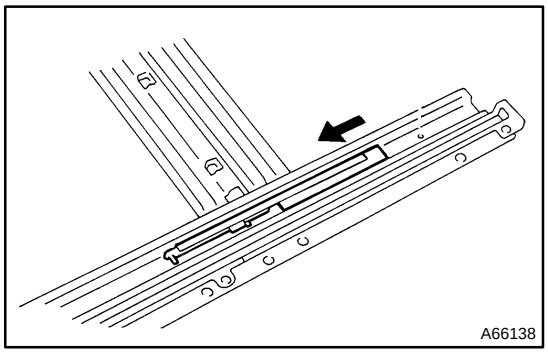

19. INSTALL SLIDING ROOF DRIVE CABLE LH

(a) Sliding the drive cable forward, install it.

20. INSTALL SLIDING ROOF DRIVE CABLE RH

(a) Sliding the drive cable forward, install it.

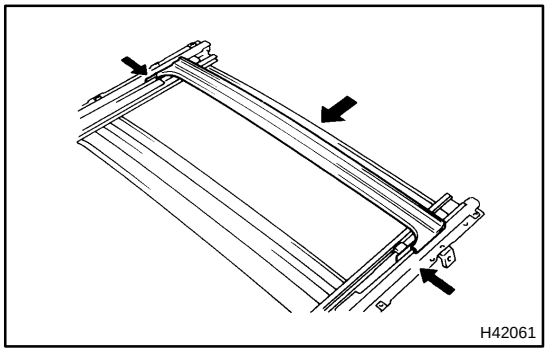

21. INSTALL ROOF DRIP CHANNEL REAR

(a) Install the roof drip channel rear, as shown in the illustration.

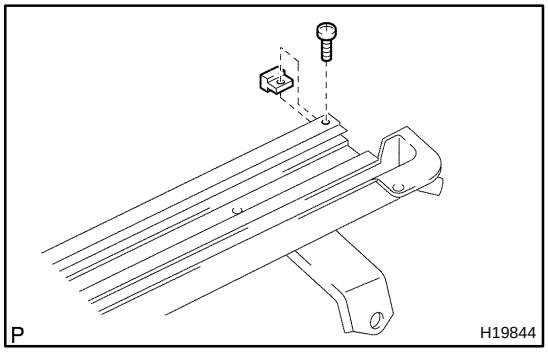

22. INSTALL SUNSHADE TRIM SUB–ASSY

(a) Install the 2 stopper with the 2 screws.

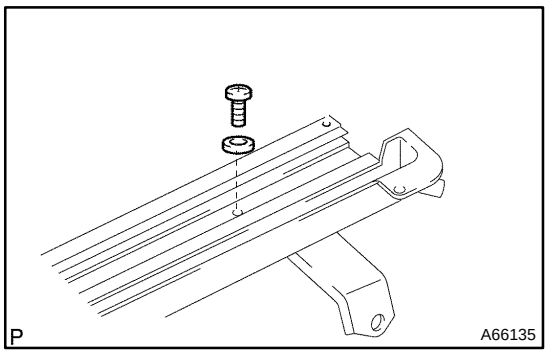

23. INSTALL SLIDING ROOF PANEL STOPPER

(a) Install the 2 stoppers with the 2 screws.

24. INSTALL SLIDING ROOF HOUSING ASSY

(a) Install the housing with the 6 nuts.
Torque: 5.5 N·m (56 kgf·cm, 49 in.·lbf)

(b) Install the 4 brackets with the 8 bolts.
Torque: 5.0 N·m (51 kgf·cm, 44 in.·lbf)

(c) Connect the 4 drain hoses to the housing.

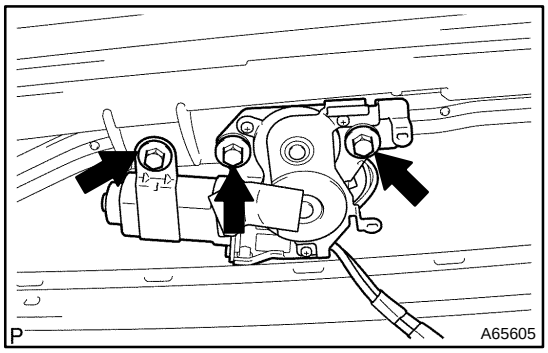

25. INSTALL SLIDING ROOF DRIVE GEAR SUB–ASSY

(a) Install the drive gear with the 3 bolts.
Torque: 5.4 N·m (55 kgf·cm, 48 in.·lbf)

(b) Connect the connector.

26. INSTALL SLIDING ROOF WEATHERSTRIP

27. INSTALL SLIDING ROOF GLASS SUB–ASSY
Torque: 4.0 N·m(41 kgf·cm, 35 in.·lbf)

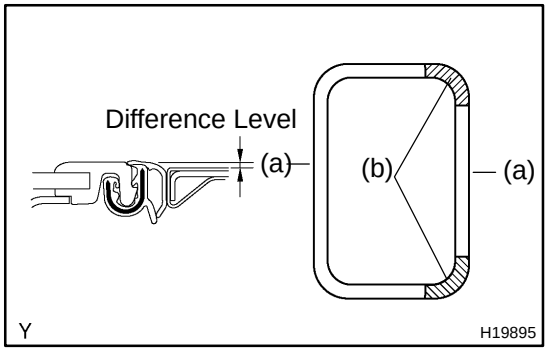

(a) Check the difference in level between the sliding roof weatherstrip and roof panel.
Standard:

Difference in level	Specification
Place (a)	0 + 1.5 mm (0 ± 0.059 in.)
Place (b)	0 + 1.5 mm (0 + 0.059 in.) 0 – 1.0 mm (0 – 0.039 in.)

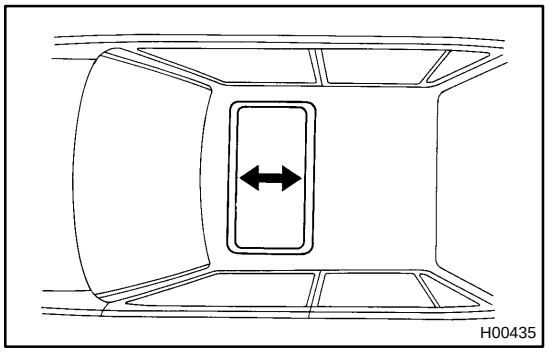

28. ADJUST SLIDING ROOF GLASS SUB–ASSY

(a) Using a torx wrench (T25), loosen the sliding roof glass installation screws.

(b) Adjust the sliding roof glass forward and backward.

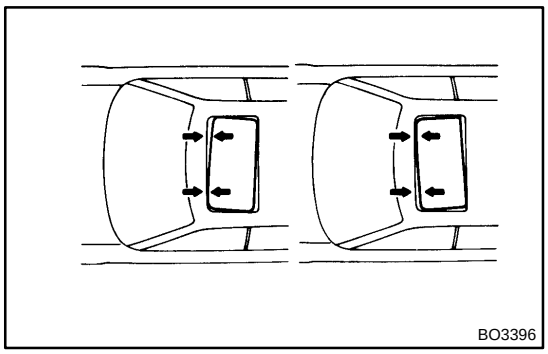

(c) When the front or rear alignment is not correct, remove the drive gear and sliding roof glass, then adjust the drive rail.

NOTICE:

Remove the drive gear with the sliding roof fully closed.

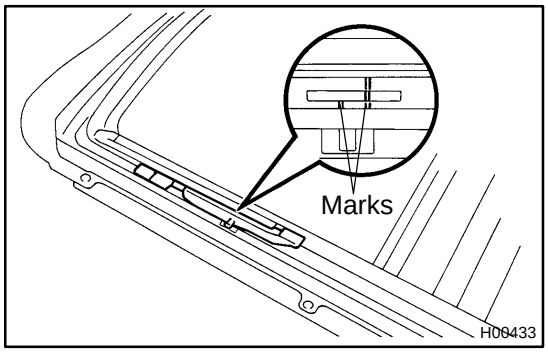

(d) Adjust the roof rail by sliding the cable forward or backward to align the 2 marks, as shown in the illustration.

(e) Install the drive gear and sliding roof glass.

29. INSPECT FOR LEAK

(a) Adjusting the sliding roof, check there is no water leak.

(b) In case of water leak, readjust the sliding roof.

30. INSTALL ROOF HEADLINING ASSY (See page 76–21)

7405P–02

PROBLEM SYMPTOMS TABLE

Symptom	Suspected Area	See page
Sliding roof system does not operate	1. POWER fuse	–
	2. GAUGE fuse	–
	3. IG1 relay	–
	4. Sliding roof motor switch	74–4
	5. Sliding roof dive gear	74–4
	6. Faulty sliding of sliding roof	–
	7. Wire harness	–
Sliding roof system stops operation halfway (Foreign material, such as a stone, is trapped in motor assembly)	1. Sliding roof motor switch	74–4
	2. Sliding roof dive gear	74–4
	3. IG1 relay	–
	4. Wire harness	–

750DE–02

ADJUSTMENT

HINT:

- In the RH side, work in the same procedure as in the LH side.
- Since the centering bolt is used as a door side hinge bolt, the door hinge cannot be adjusted with it on. Substitute the bolt with washer for the centering bolt.

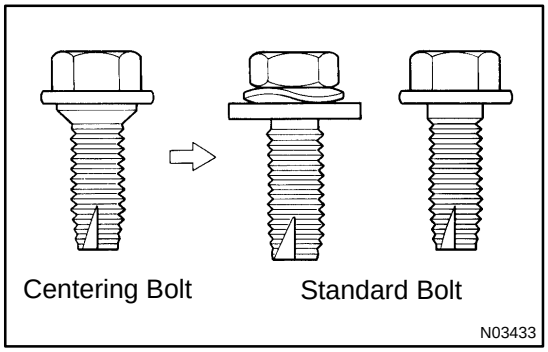

1. INSPECT FRONT DOOR PANEL SUB–ASSY LH

(a) Check that the clearance is within the standard value.

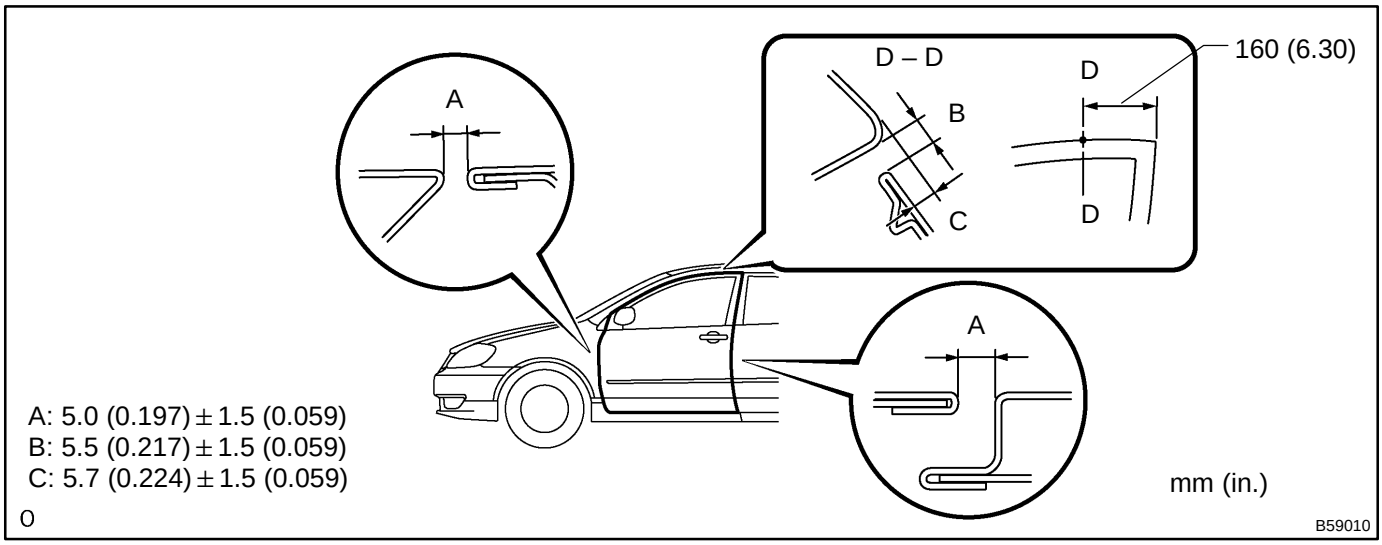

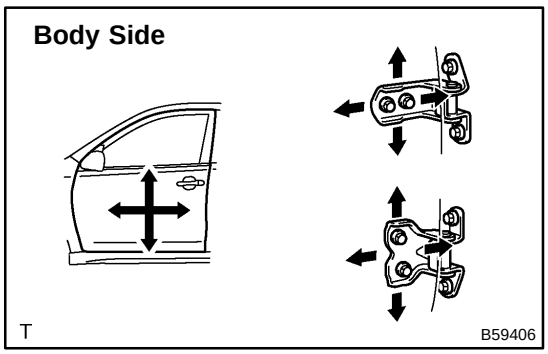

2. ADJUST FRONT DOOR PANEL SUB–ASSY LH

(a) Using SST, adjust the door by loosening the body side hinge bolts.

SST 09812–00010

Torque: 26 N·m (265 kgf·cm, 19 ft·lbf)

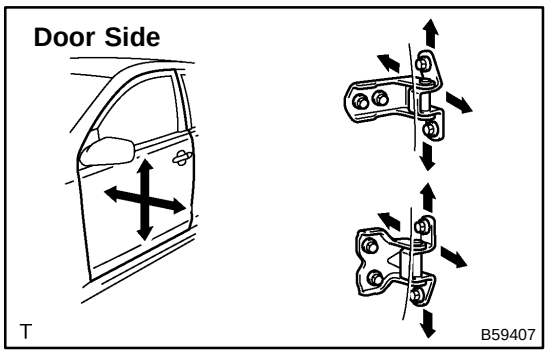

(b) Adjust the door by loosening the door side hinge bolts.
Torque: 26 N·m (265 kgf·cm, 19 ft·lbf)

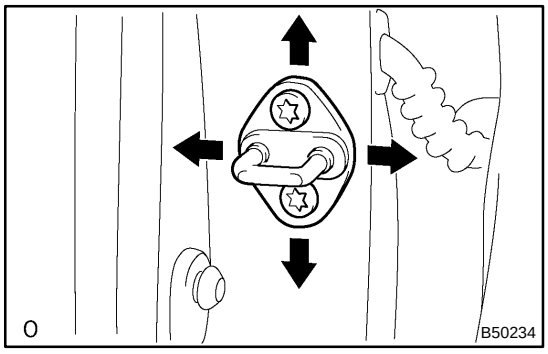

(c) Adjust the striker position by slightly loosening the striker mounting screws, and hitting the striker with a plastic hammer.
(d) Tighten the striker mounting screws again.
Torque: 23 N·m (235 kgf·cm, 17 ft·lbf)

FRONT DOOR

COMPONENTS

750DC–02

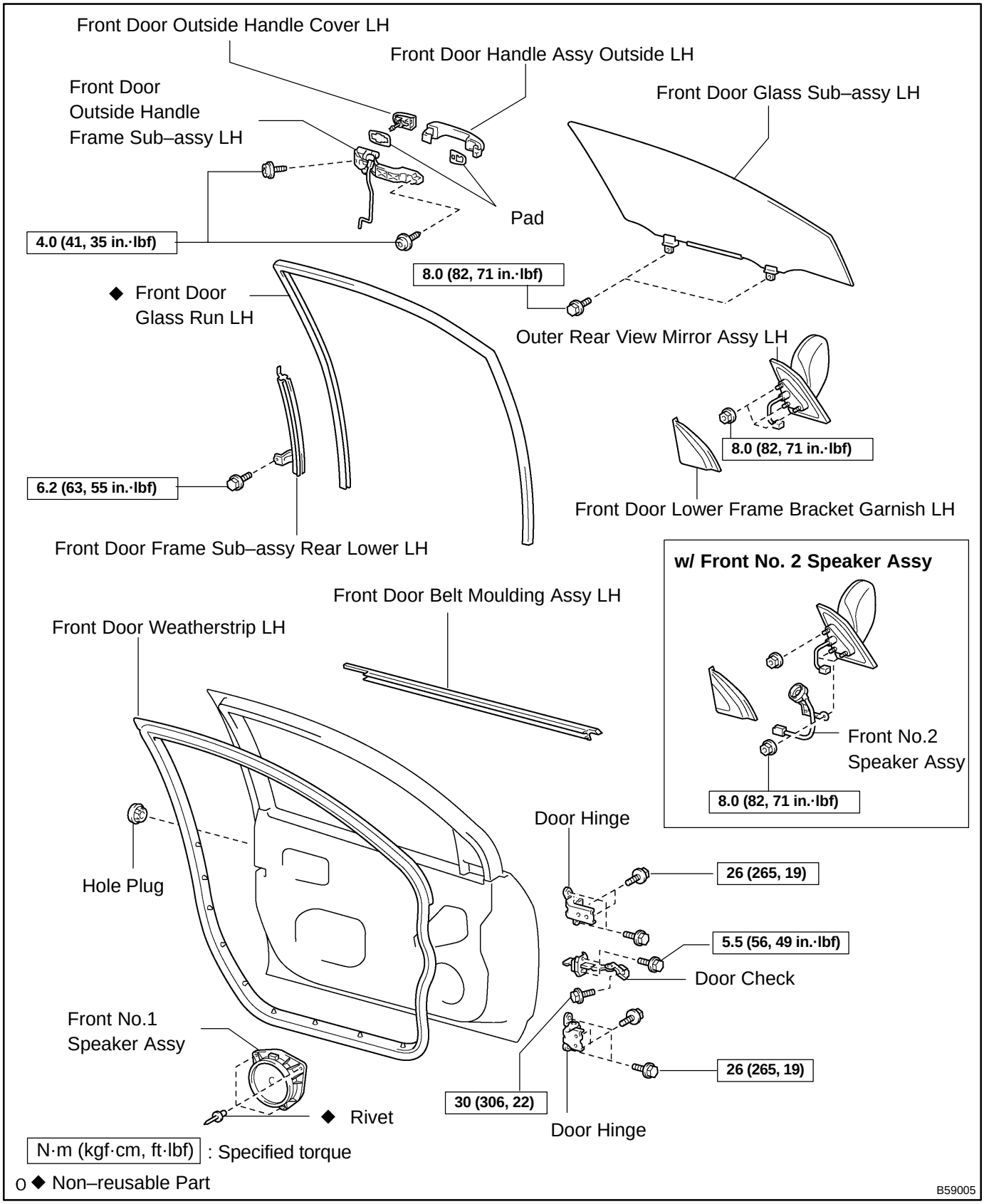

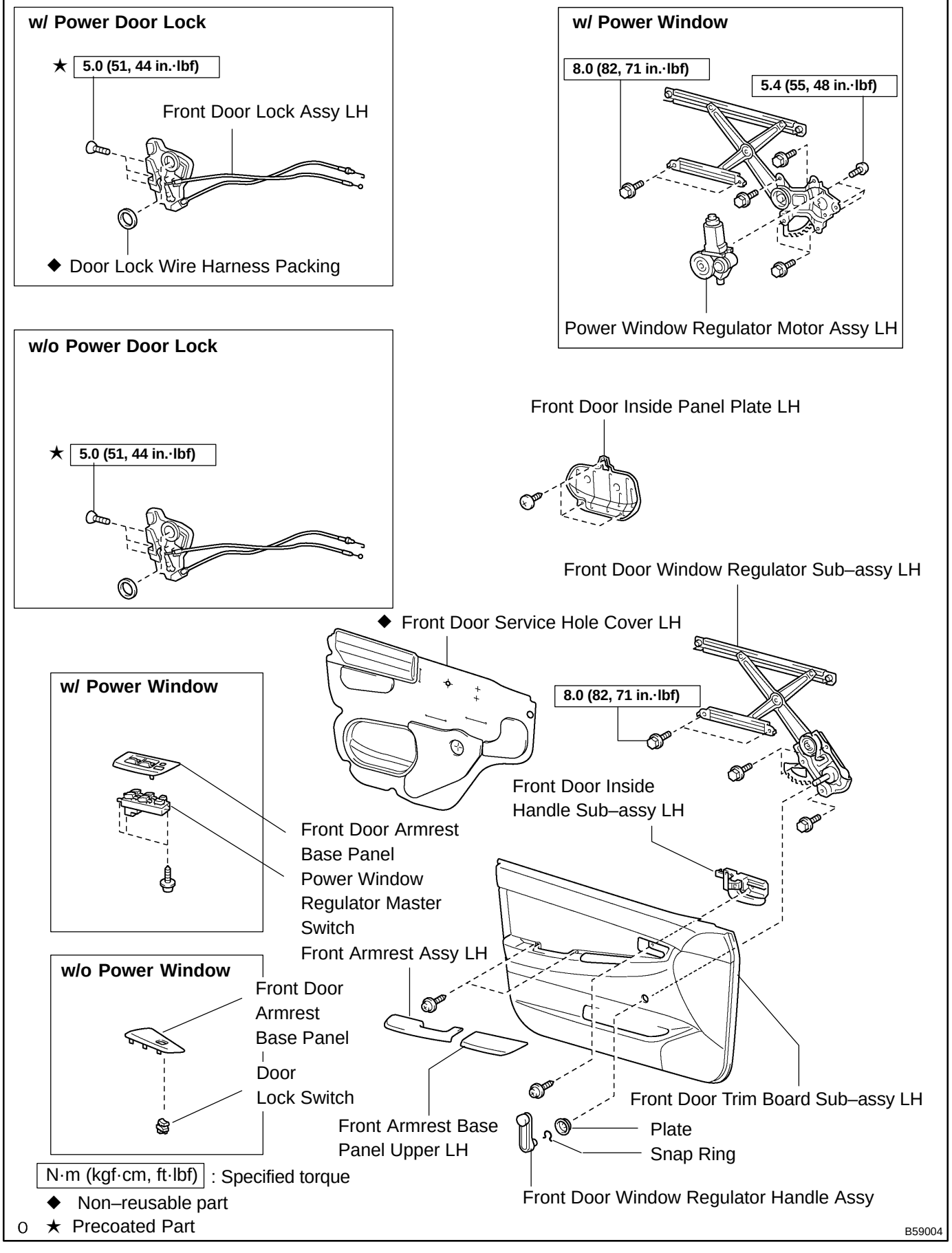
w/ Power Door Lock
★ 5.0 (51, 44 in.·lbf)
Front Door Lock Assy LH
◆ Door Lock Wire Harness Packing
w/ Power Window
8.0 (82, 71 in.·lbf)
5.4 (55, 48 in.·lbf)
Power Window Regulator Motor Assy LH
w/o Power Door Lock
★ 5.0 (51, 44 in.·lbf)
Front Door Inside Panel Plate LH
Front Door Window Regulator Sub–assy LH
◆ Front Door Service Hole Cover LH
8.0 (82, 71 in.·lbf)
w/ Power Window
Front Door Inside
Handle Sub–assy LH
Front Door Armrest
Base Panel
Power Window
Regulator Master
Switch
Front Armrest Assy LH
w/o Power Window
Front Door
Armrest
Base Panel
Door
Lock Switch
Front Door Trim Board Sub–assy LH
Front Armrest Base
Panel Upper LH
Plate
Snap Ring
Front Door Window Regulator Handle Assy
N·m (kgf·cm, ft·lbf) : Specified torque
◆ Non–reusable part
★ Precoated Part
B59004

750DD–02

OVERHAUL

HINT:

- Installation is in the reverse order of the removal. But the installation is indicated only when it has a point.
- In the RH side, work in the same procedure as in the LH side.

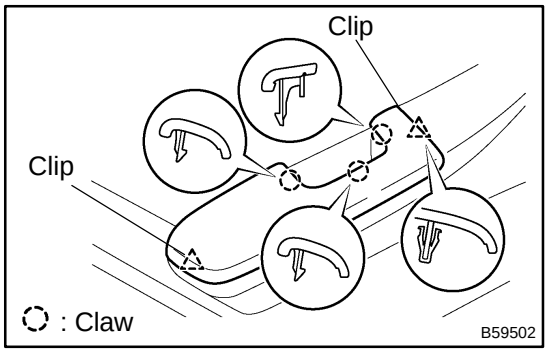

1. REMOVE FRONT ARMREST ASSY LH

(a) Using a screwdriver, remove the front armrest.

HINT:

Tape the screwdriver tip before use.

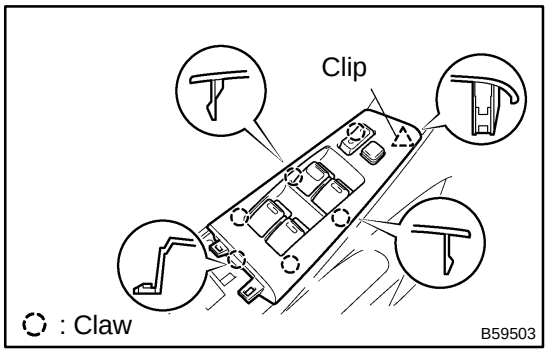

2. REMOVE POWER WINDOW REGULATOR MASTER SWITCH ASSY (W/ POWER WINDOW)

(a) Using a screwdriver, remove the power window regulator master switch assembly from the trim board.

HINT:

Tape the screwdriver tip before use.

(b) Disconnect the master switch connector.

(c) Remove the 3 screws and base panel from the master switch.

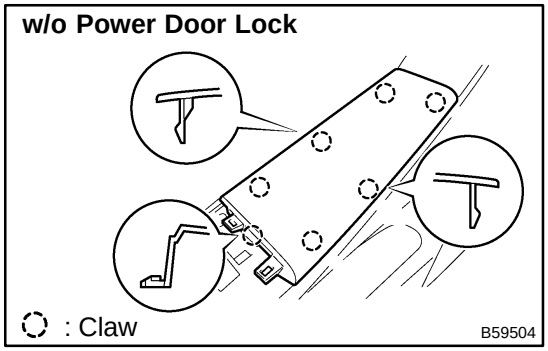

3. REMOVE FRONT ARMREST BASE PANEL UPPER LH (W/O POWER WINDOW)

(a) w/o Power door lock:

Remove the front armrest base panel upper.

(1) Using a screwdriver, remove the front armrest base panel upper from the trim board.

HINT:

Tape the screwdriver tip before use.

(b) w/ Power door lock:

Remove the front armrest base panel upper.

(1) Using a screwdriver, remove the front armrest base panel upper from the trim board.

HINT:

Tape the screwdriver tip before use.

(2) Disconnect the door lock switch connector.

(3) Remove the door lock switch from the base panel.

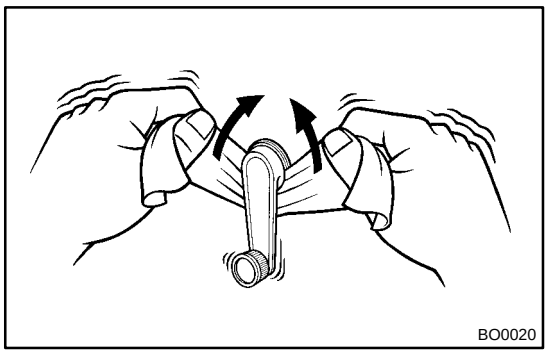

4. REMOVE FRONT DOOR WINDOW REGULATOR HANDLE ASSY (W/O POWER WINDOW)

(a) Using a shop rag, remove the snap ring.

(b) Remove the front door window regulator handle and plate.

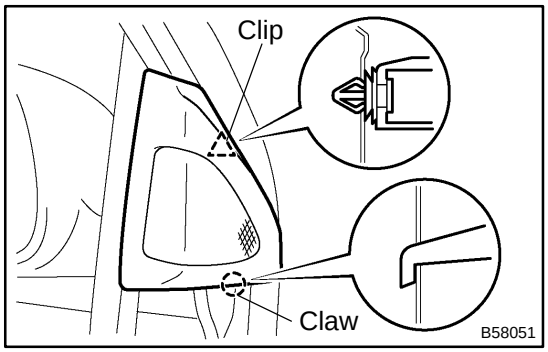

5. REMOVE FRONT DOOR LOWER FRAME BRACKET GARNISH LH

(a) Remove the lower frame bracket garnish.

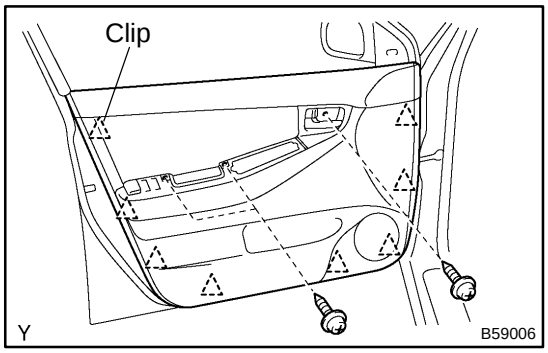

6. REMOVE FRONT DOOR TRIM BOARD SUB–ASSY LH

(a) Remove the 3 screws.

(b) Using a screwdriver, disengage the clips and then pull the trim board upward to remove it.

HINT:

Tape the screwdriver tip before use.

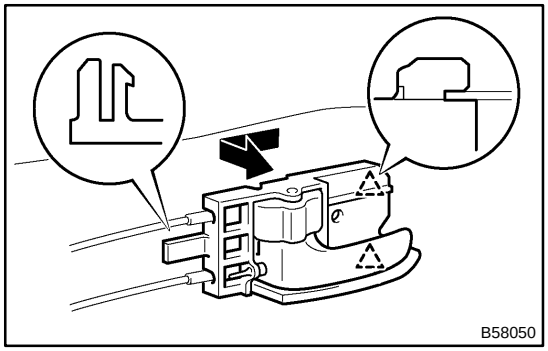

7. REMOVE FRONT DOOR INSIDE HANDLE SUB–ASSY LH

(a) Remove the inside handle, and then disconnect the 2 cables from the inside handle.

8. REMOVE FRONT DOOR SERVICE HOLE COVER LH

(a) Disconnect each connector, and remove the front door service hole cover.

NOTICE:

Remove the remaining tape on the body side.

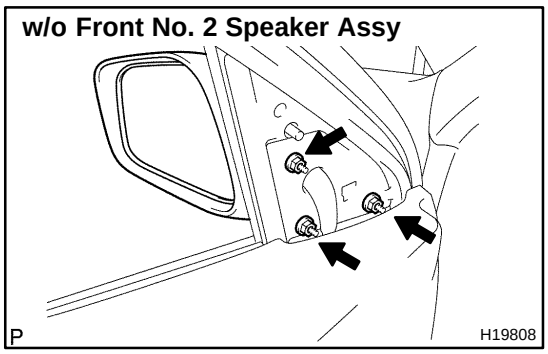

9. REMOVE OUTER REAR VIEW MIRROR ASSY LH

(a) Disconnect the outer mirror connector.

(b) w/o Front No. 2 speaker assembly:
Remove the outer mirror assembly.
(1) Remove the 3 nuts and outer mirror.

(c) w/ Front No. 2 speaker assembly:
Remove the outer mirror assembly.
(1) Disconnect the speaker connector.
(2) Remove the 2 nuts and front No. 2 speaker.
(3) Remove the nut and outer mirror.

10. REMOVE FRONT DOOR BELT MOULDING ASSY LH (See page 76–12)

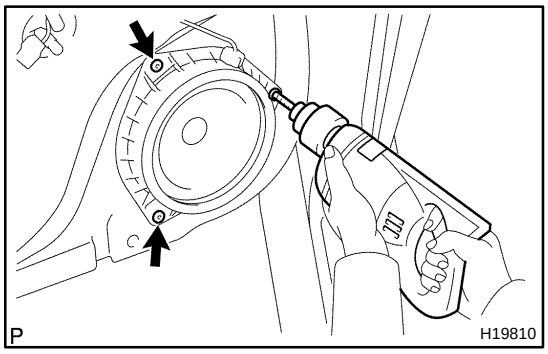

11. REMOVE FRONT NO.1 SPEAKER ASSY

(a) Disconnect the speaker connector.

(b) Using a drill of less than ø 4 mm (0.16 in.), drill out the rivet heads and remove the speaker.

(c) Gently and vertically put the drill onto the rivet, and cut the rivet flanges.

NOTICE:

- **Prizing the hole with a drill can lead to damage to the rivet hole or breaking the drill.**
- **Be careful with the cut rivet, because it is hot.**

(d) Even if the flange is taken off, continue drilling and push out the remaining fragments with the drill.

(e) Using a vacuum cleaner, remove the drilled rivet and dust from the inside of the door.

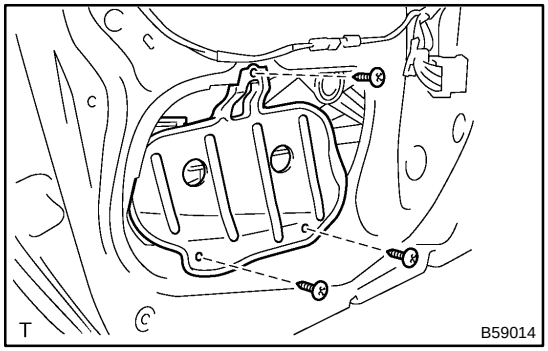

12. REMOVE FRONT DOOR INSIDE PANEL PLATE LH

(a) Remove the 3 screws and front door inside panel plate.

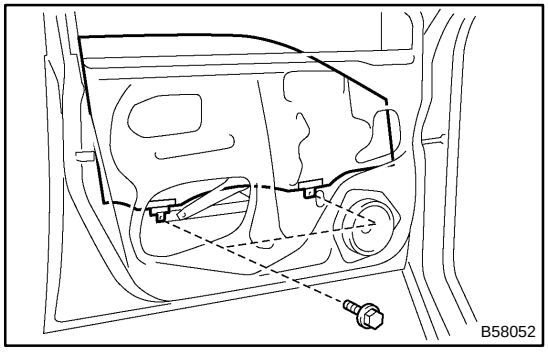

13. REMOVE FRONT DOOR GLASS SUB–ASSY LH

HINT:

Insert a shop rag inside the door panel to prevent the glass from being scratched.

(a) Open the door glass until the bolts appear in the service hole.

(b) Remove the 2 bolts and door glass.

NOTICE:

Do not damage the door glass.

HINT:
Pull the glass upward to remove it.

14. REMOVE FRONT DOOR GLASS RUN LH

(a) Remove the front door glass run.

15. REMOVE FRONT DOOR WINDOW REGULATOR SUB–ASSY LH (W/O POWER WINDOW)

(a) Loosen the 6 bolts.

NOTICE:

When the bolts are removed, the front door window regulator might drop and be deformed.

(b) Remove the 6 bolts and front door window regulator.

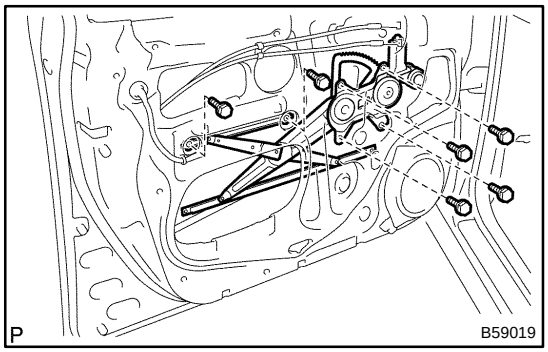

16. REMOVE FRONT DOOR WINDOW REGULATOR SUB–ASSY LH (W/ POWER WINDOW)

(a) Disconnect the window regulator connector.

(b) Loosen the 6 bolts.

NOTICE:

When the bolts are removed, the front door window regulator might drop and be deformed.

(c) Remove the 6 bolts and front door window regulator.

17. REMOVE POWER WINDOW REGULATOR MOTOR ASSY LH (W/ POWER WINDOW)

(a) Place matchmarks on the window regulator motor bracket and regulator gear.

(b) Remove the 3 screws and motor.

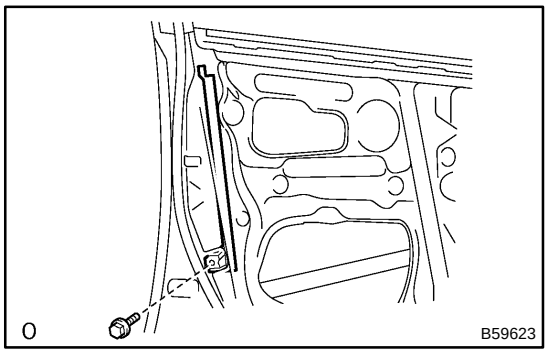

18. REMOVE FRONT DOOR FRAME SUB–ASSY REAR LOWER LH

(a) Remove the bolt and front door frame rear lower.

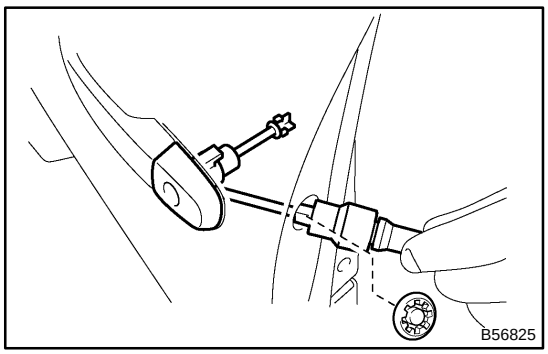

19. REMOVE FRONT DOOR OUTSIDE HANDLE COVER LH

(a) Remove the hole plug.

(b) Using a torx wrench (T30), loosen the screw and remove the door outside handle cover with the door lock key cylinder installed.

20. REMOVE FRONT DOOR LOCK ASSY LH (W/O POWER DOOR LOCK)

(a) Using a torx wrench (T30), remove the 3 screws and the door lock assembly.

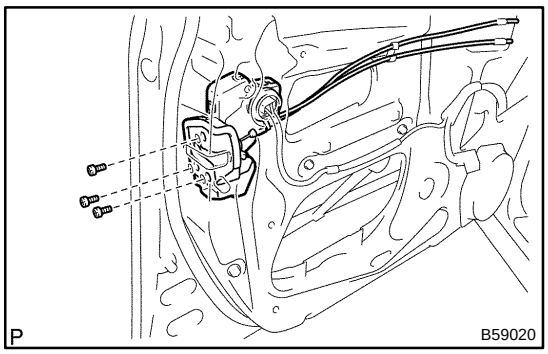

21. REMOVE FRONT DOOR W/MOTOR LOCK ASSY LH (W/ POWER DOOR LOCK)

(a) Disconnect the power door lock connector.

(b) Using a torx wrench (T30), remove the 3 screws and the power door lock assembly.

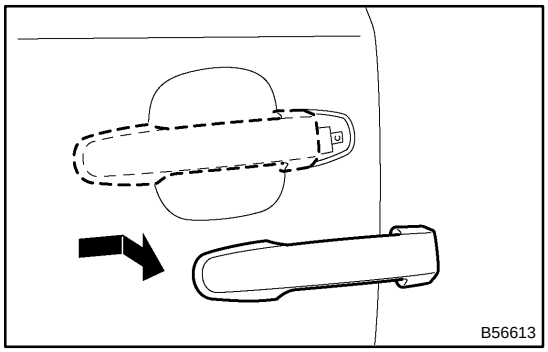

22. REMOVE FRONT DOOR HANDLE ASSY OUTSIDE LH

(a) Pushing the outside handle in the arrow mark direction in the illustration, remove the outside handle.

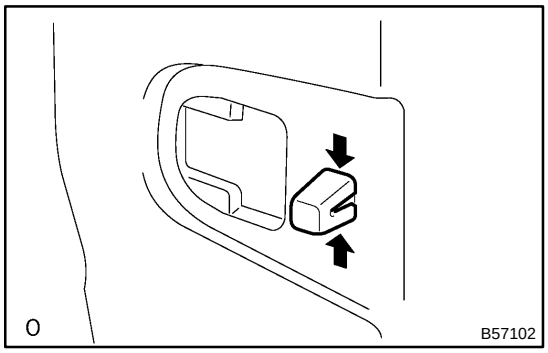

23. REMOVE FRONT DOOR OUTSIDE HANDLE FRAME SUB–ASSY LH

(a) Using a torx wrench (T30), loosen the screw.
Torque: 4.0 N·m (41 kgf·cm, 35 in.·lbf)

(b) Using pliers, disengage the clips and remove the door outside handle frame, as shown in the illustration.

NOTICE:

Be sure to remove the outside handle together with the clips, because the clips will be damaged if the clips remain attached to the door panel.

24. REMOVE FRONT DOOR WEATHERSTRIP LH

(a) Remove the door panel side bolt and disconnect the front door check assembly.

(b) Using a screwdriver, remove the weatherstrip.

HINT:

Tape the screwdriver tip before use.

25. INSTALL FRONT DOOR WEATHERSTRIP LH

(a) Install the weatherstrip.

(b) Install the front door check assembly with the door panel side bolt.
Torque: 5.5 N·m (56 kgf·cm, 49 in.·lbf)

26. INSTALL FRONT DOOR OUTSIDE HANDLE FRAME SUB–ASSY LH

(a) Using a torx wrench (T30), install the outside handle.
Torque: 4.0 N·m (41 kgf·cm, 35 in.·lbf)

27. INSTALL FRONT DOOR LOCK ASSY LH (W/O POWER DOOR LOCK)

(a) Apply MP grease to the sliding and rotating parts of the door lock.

(b) Apply adhesive to the 3 screws.
Part No.08833–00070, THREE BOND 1324 or equivalent

(c) Using a torx wrench (T30), install the door lock assembly with the 3 screws.
Torque: 5.0 N·m (51 kgf·cm, 44 in.·lbf)

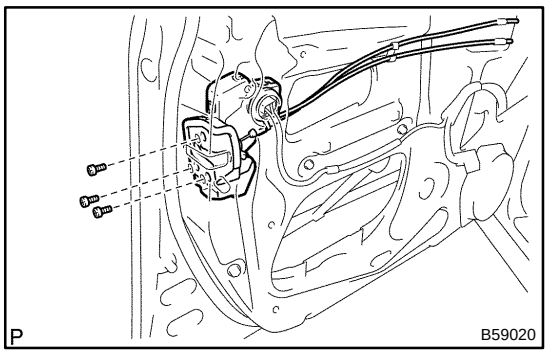

28. INSTALL FRONT DOOR W/MOTOR LOCK ASSY LH (W/ POWER DOOR LOCK)

(a) Install a new door lock wire harness packing.

NOTICE:

- **If reusing the removed lock with front door motor, the packing in the connecting part should be replaced with a new one.**
- **Be careful that no grease and dirt will stick to the packing surface in the connecting part.**
- **Reusing the removed packing or using a damaged packing will cause water to penetrate through the connecting part, and it will result in a malfunction of the door lock.**

(b) Insert the outside handle link into the lock assembly with front door motor, and then set it to the door panel.

NOTICE:

Make sure that the outside handle link is securely engaged with the lock assembly.

(c) Apply MP grease to the sliding and rotating parts of the door lock.

(d) Apply adhesive to the 3 screws.
Part No.08833–00070, THREE BOND 1324 or equivalent.

(e) Using a torx wrench (T30), install the front door lock assembly with the 3 screws.
Torque: 5.0 N·m (51 kgf·cm, 44 in.·lbf)

(f) Connect the power door lock connector.

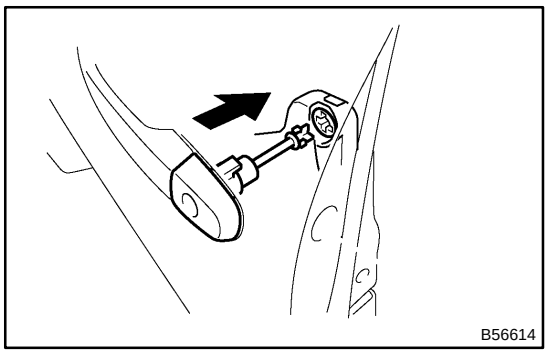

29. INSTALL FRONT DOOR OUTSIDE HANDLE COVER LH

(a) Using a torx wrench (T30), install the door outside handle cover with the screw.
Torque: 4.0 N·m (41 kgf·cm, 35 in.·lbf)

30. INSTALL FRONT DOOR FRAME SUB–ASSY REAR LOWER LH

(a) Install the front door frame rear lower with the bolt.
Torque: 6.2 N·m (63 kgf·cm, 55 in.·lbf)

31. INSTALL POWER WINDOW REGULATOR MOTOR ASSY LH (W/ POWER WINDOW)

(a) Align the matchmarks on the regulator motor bracket and regulator gear.

(b) Install the 3 screws.
Torque: 5.4 N·m (55 kgf·cm, 48 in.·lbf)

HINT:

Never rotate the motor to the down direction until the window glass installation has done.

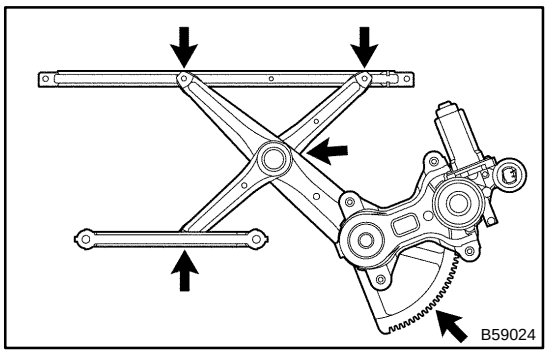

32. INSTALL FRONT DOOR WINDOW REGULATOR SUB–ASSY LH (W/ POWER WINDOW)

(a) Apply MP grease to the sliding and rotating parts of the window regulator.

NOTICE:

Do not apply grease to the spring of the window regulator.

(b) Apply the window regulator to the 6 regulator installation holes on the front door panel, temporarily install the window regulator with the installation bolts.

(c) Tighten the 6 bolts and the temporarily installed bolt.
Torque: 8.0 N·m (82 kgf·cm, 71 in.·lbf)

(d) Connect the window regulator connector.

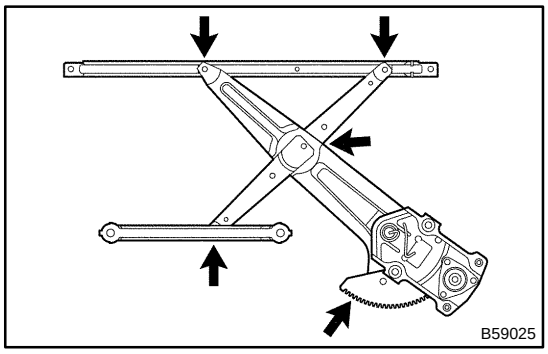

33. INSTALL FRONT DOOR WINDOW REGULATOR SUB–ASSY LH (W/O POWER WINDOW)

(a) Apply MP grease to the sliding and rotating parts of the window regulator.

NOTICE:

Do not apply grease to the spring of the window regulator.

(b) Install the front door window regulator with the 6 bolts.
Torque: 8.0 N·m (82 kgf·cm, 71 in.·lbf)

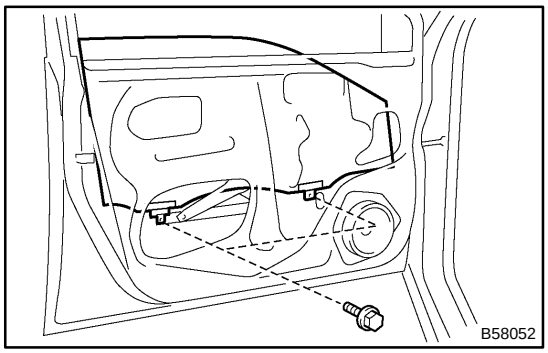

34. INSTALL FRONT DOOR GLASS SUB–ASSY LH (W/ POWER WINDOW)

NOTICE:

Do not damage the door glass.

(a) Put the door glass in the door panel carefully.

(b) Install the door glass with the 2 bolts to the window regulator.
Torque: 8.0 N·m (82 kgf·cm, 71 in.·lbf)

(c) Inspect the power window operation.

HINT:

When the installation point of the front door glass does not match, adjust the regulator position in the manual operation.

(1) Connect the power window switch to the wire harness and turn the ignition switch ON.

(2) Repeat UP and DOWN operation several times in the manual operation.

(3) Check if AUTO UP →AUTO DOWN operates in the automatic operation.

HINT:

- Note that the jam protection function does not operate just after resetting.
- Reset the regulator again when performing the reverse operation after closing the window fully in the AUTO UP operation.

35. INSPECT POWER WINDOW FUNCTION (W/ POWER WINDOW) (See page 70–2)

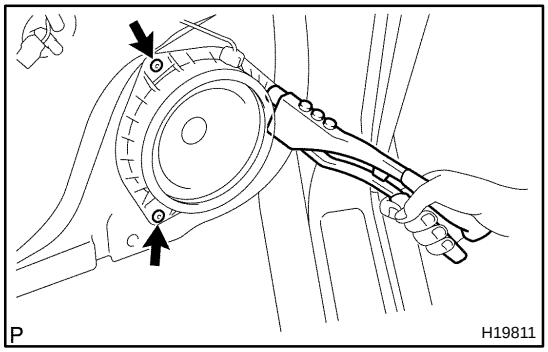

36. INSTALL FRONT NO.1 SPEAKER ASSY

(a) Install the front speaker to the door.

(b) Using an air riveter or hand riveter, install the front speaker.

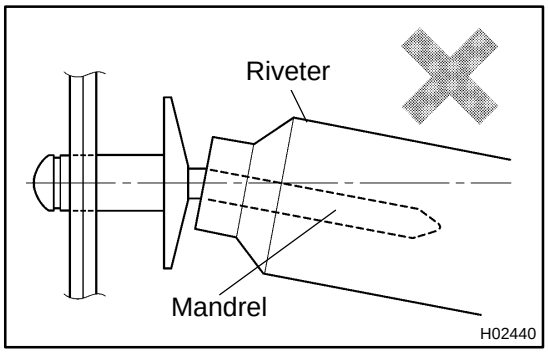

NOTICE:

- **Do not prize a riveter, because the riveter will be damaged, and the mandrel will be bent.**

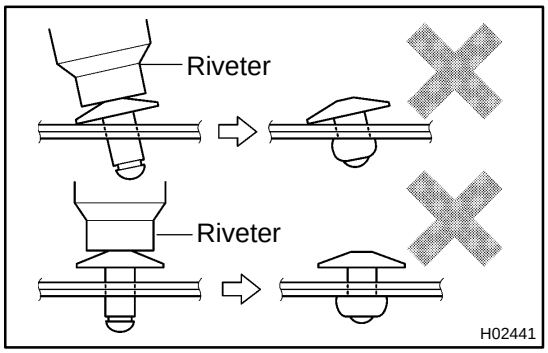

- **Do not tilt the riveter when removing the rivet, because the materials are not tightened firmly.**

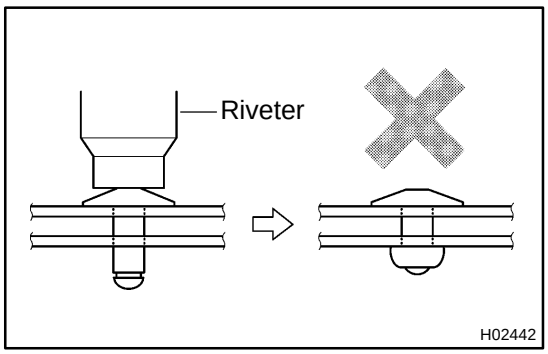

- **Install the rivet while attaching the materials, because they are not tightened firmly.**

(c) Connect the speaker connector.

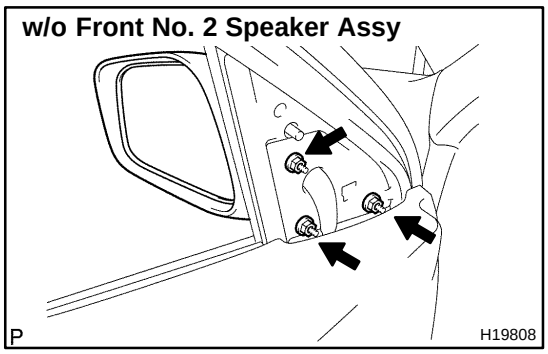

37. INSTALL OUTER REAR VIEW MIRROR ASSY LH

(a) w/o Front No. 2 speaker assembly:
Install the outer mirror assembly.
(1) Install the outer mirror with the 3 nuts.
Torque: 8.0 N·m (82 kgf·cm, 71 in.·lbf)

(b) w/ Front No. 2 speaker assembly:
Install the outer mirror assembly.
(1) Temporarily install the outer mirror with the nut.
(2) Temporarily install the front No. 2 speaker with the 2 nuts.
(3) Tighten the 3 nuts.
Torque: 8.0 N·m (82 kgf·cm, 71 in.·lbf)
(4) Connect the speaker connector.

(c) Connect the outer mirror connector.

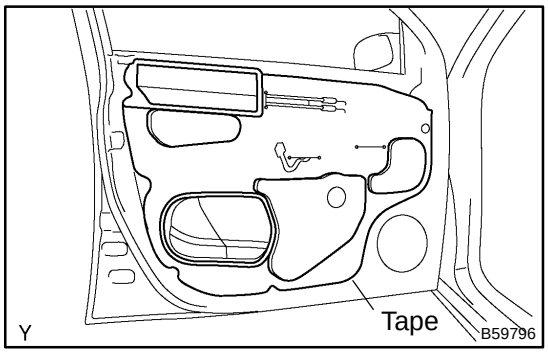

38. INSTALL FRONT DOOR SERVICE HOLE COVER LH

(a) Install a new service hole cover to the door panel.

HINT:

- When installing the service hole cover, pull out the links and connectors through the service hole cover.
- There should be no wrinkles or folds after attaching the service hole cover.
- After attaching the service hole cover, sealing condition should be confirmed.

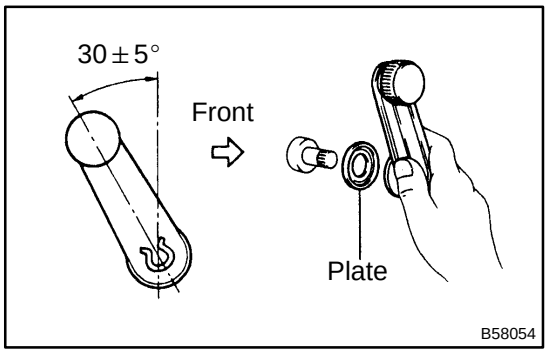

39. INSTALL FRONT DOOR WINDOW REGULATOR HANDLE ASSY (W/O POWER WINDOW)

(a) Install the regulator handle with the snap ring.

HINT:

With the door window fully closed, install the plate and regulator handle with the snap ring as shown in the illustration.

HOOD

ADJUSTMENT

750DB–02

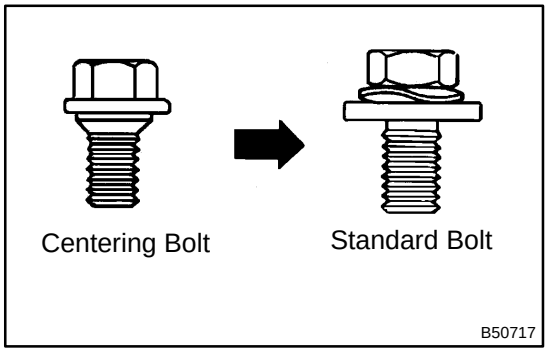

HINT:
Since the centering bolt is used as a hood hinge and hood lock set bolt, the hood and hood lock can not be adjusted with it on. Substitute a bolt with washer for the centering bolt.

1. INSPECT HOOD SUB–ASSY

(a) Check that the clearance is within the standard value.

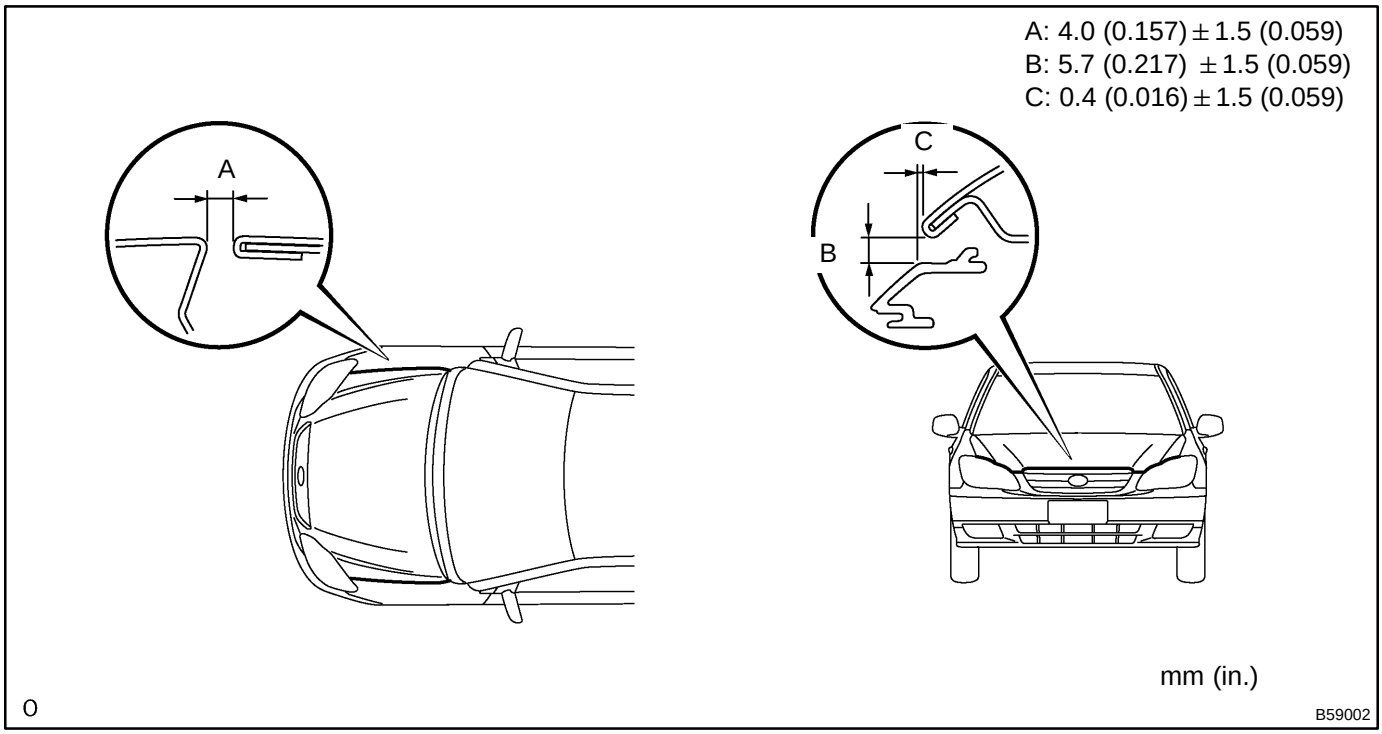

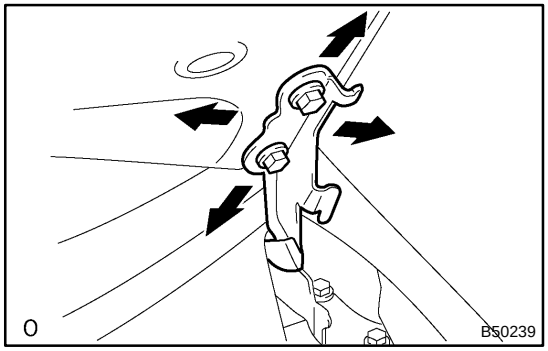

2. ADJUST HOOD SUB–ASSY

(a) Adjust the hood by loosening the hood side hinge bolts.
Torque: 13 N·m (133 kgf·cm, 10 ft·lbf)

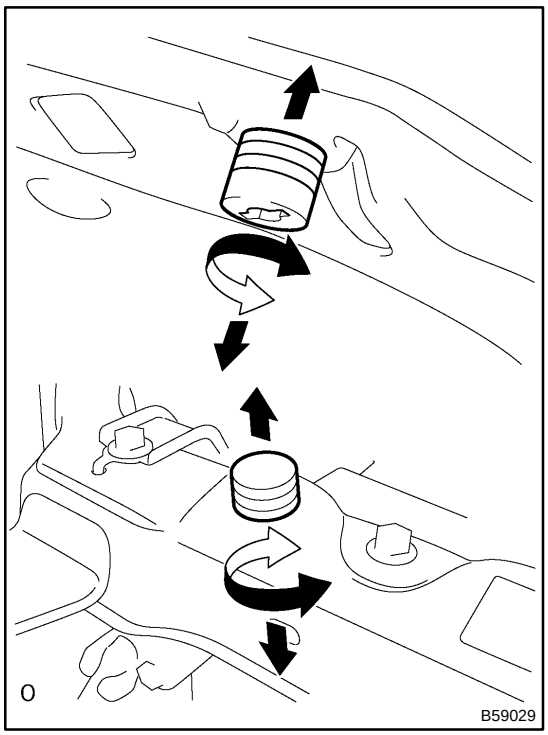

(b) Adjust the hood by turning the cushions.

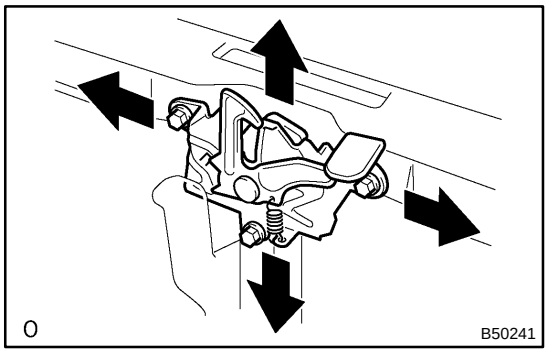

(c) Adjust the lock by loosening the 3 bolts.
Torque: 7.0 N·m (82 kgf·cm, 71 in.·lbf)

LUGGAGE COMPARTMENT DOOR

750DI–02

ADJUSTMENT

1. INSPECT LUGGAGE COMPARTMENT DOOR PANEL SUB–ASSY

(a) Check that the clearance is within the standard value.

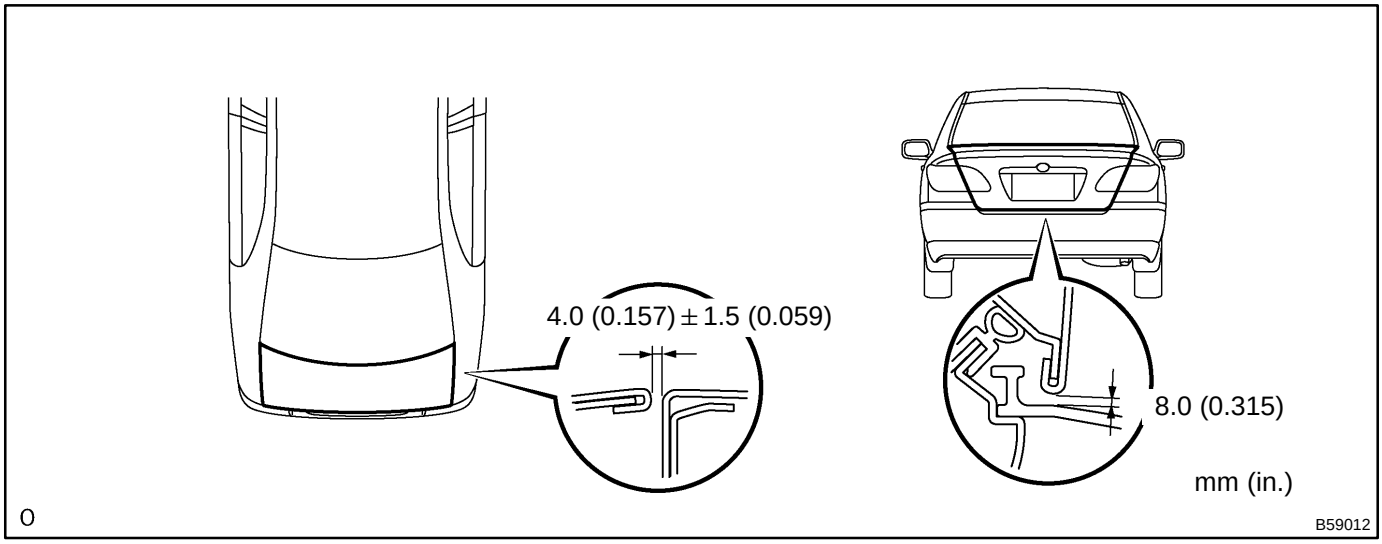

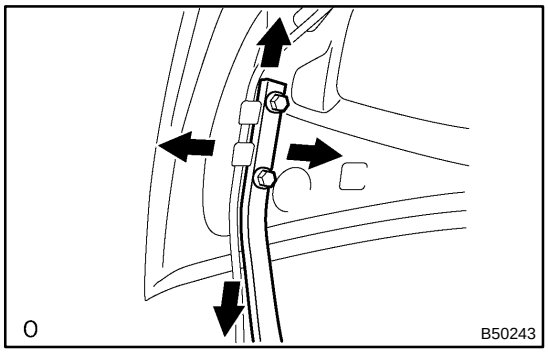

2. ADJUST LUGGAGE COMPARTMENT DOOR PANEL SUB–ASSY

(a) For forward/rearward and right/left adjustments, loosen the bolts.

Torque: 7.0 N·m (71 kgf·cm, 62 in.·lbf)

(b) For a vertical adjustment of the door front end, increase or decrease the number of washers between the hinge and door.

Torque: 7.0 N·m (71 kgf·cm, 62 in.·lbf)

(c) Remove the spare wheel cover (See page 76–5).

(d) Remove the rear floor finish plate (See page 76–5).

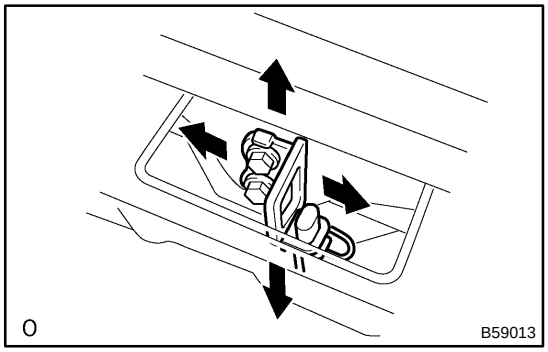

(e) For forward/rearward and right/left adjustments, loosen the bolts.

Torque: 5.5 N·m (56 kgf·cm, 49 in.·lbf)

(f) Using a hammer and a brass bar, tap the striker to adjust it.

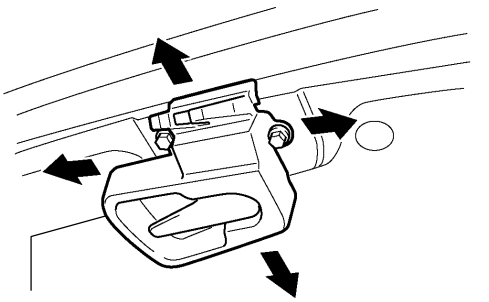
Luggage Compartment Door Lock Assy .8

(g) Perform the forward/rearward and right/left adjustments, by loosening the bolts of the luggage compartment door.
Torque: 5.5 N·m (56 kgf·cm, 49 in.·lbf)

LUGGAGE DOOR HINGE TORSION BAR RH

750DJ–02

REPLACEMENT

HINT:

- Installation is in the reverse order of the removal. But the installation is indicated only when it has a point.
- In the LH side, work in the same procedure as in the RH side.
- Since the removal of the torsion bar will cause no tension, operation of opening and closing the door should be carried out holding the door by hand in order to prevent the door from closing without any resistance.
- RH side torsion bar is in the upper side and LH side torsion bar is in the lower side, thus the installation should be done in the order of RH to LH, and the removal should be done in the order of LH to RH.

1. REMOVE LUGGAGE DOOR HINGE TORSION BAR RH

(a) Remove the torsion bars from the center bracket.

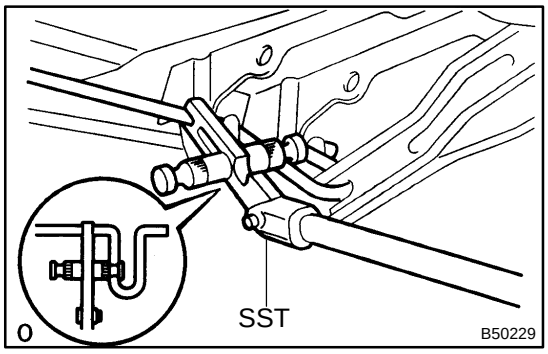

(b) Install SST to the torsion bar on the hinge side.
SST 09804–24010

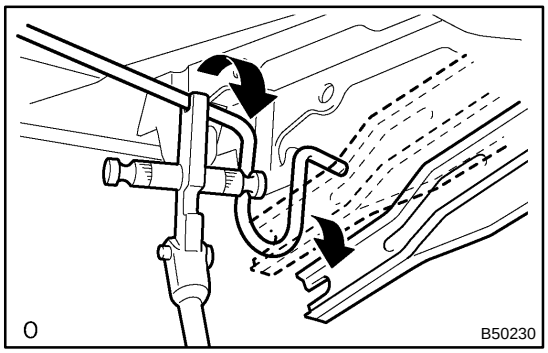

(c) Push down the SST, and pull the luggage compartment door hinge from the torsion bar.

(d) Slowly lift the SST, and remove the torsion bar from the torsion bar bracket with SST.

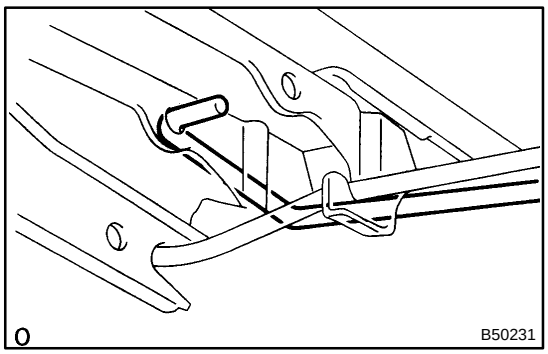

(e) Disconnect the torsion bar from the bracket.

(f) Employ the same manner described above to the other side.

2. INSTALL LUGGAGE DOOR HINGE TORSION BAR RH

(a) When installing the torsion bar, be sure to install it to the clamp securely.

750DH–02

ADJUSTMENT

HINT:

- In the RH side, work in the same procedure as in the LH side.

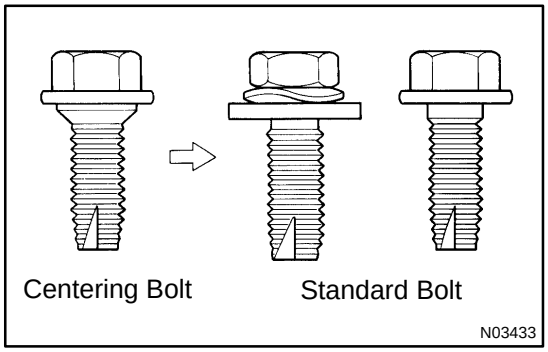

- Since the centering bolt is used as a door side hinge bolt, the door hinge cannot be adjusted with it on. Substitute the bolt with washer for the centering bolt.

1. INSPECT REAR DOOR PANEL SUB–ASSY LH

(a) Check that the clearance is within the standard value.

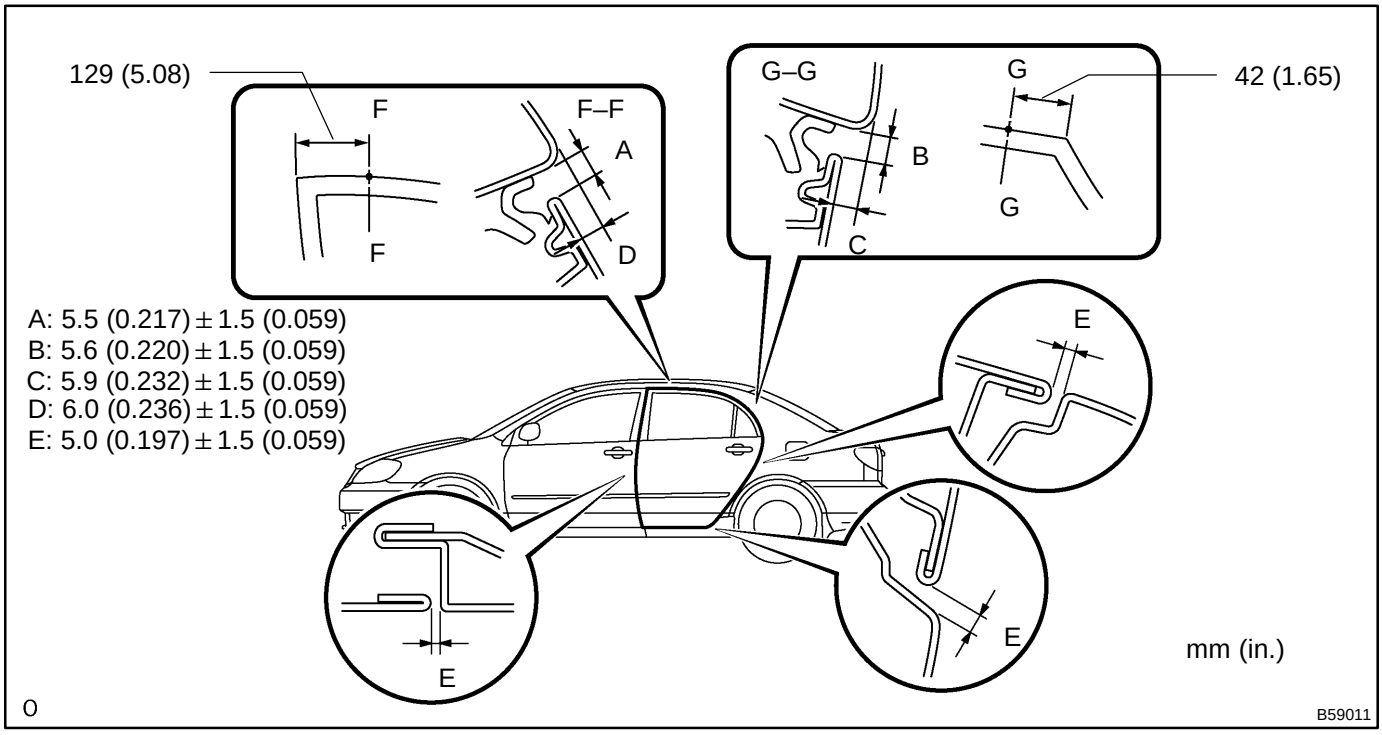

2. REMOVE FRONT DOOR SCUFF PLATE LH (See page 76–21)

3. REMOVE REAR DOOR SCUFF PLATE LH (See page 76–21)

4. REMOVE FRONT DOOR WEATHERSTRIP LH (See page 75–7)

5. REMOVE REAR DOOR WEATHERSTRIP LH (See page 75–20)

6. REMOVE CENTER PILLAR GARNISH LOWER LH (See page 76–21)

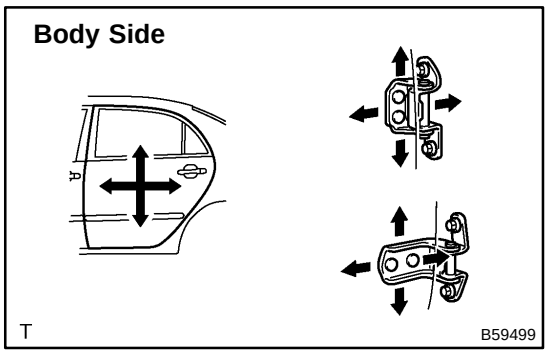

7. ADJUST REAR DOOR PANEL SUB–ASSY LH

(a) Adjust the door by loosening the body side hinge nuts.
Torque: 26 N·m (265 kgf·cm, 19 ft·lbf)

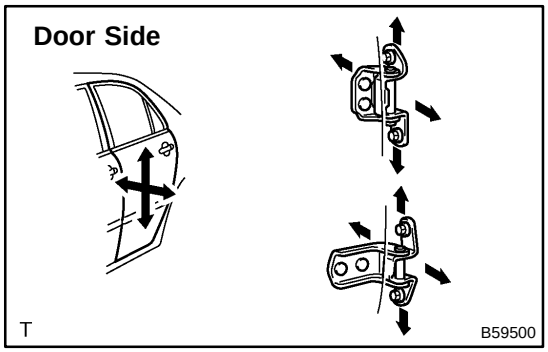

(b) Adjust the door by loosening the door side hinge bolts.
Torque: 26 N·m (265 kgf·cm, 19 ft·lbf)

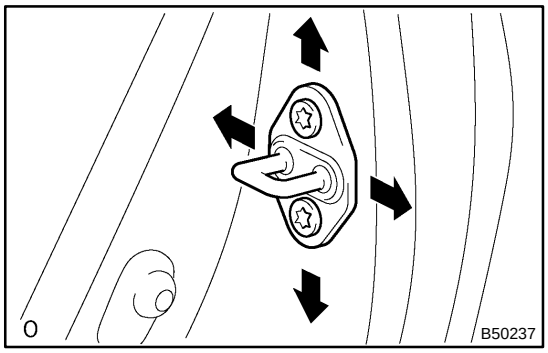

(c) Adjust the striker position by slightly loosening the striker mounting screws, and hitting the striker with a plastic hammer.

(d) Tighten the striker mounting screws again.
Torque: 23 N·m (235 kgf·cm, 17 ft·lbf)

REAR DOOR

COMPONENTS

750DF–02

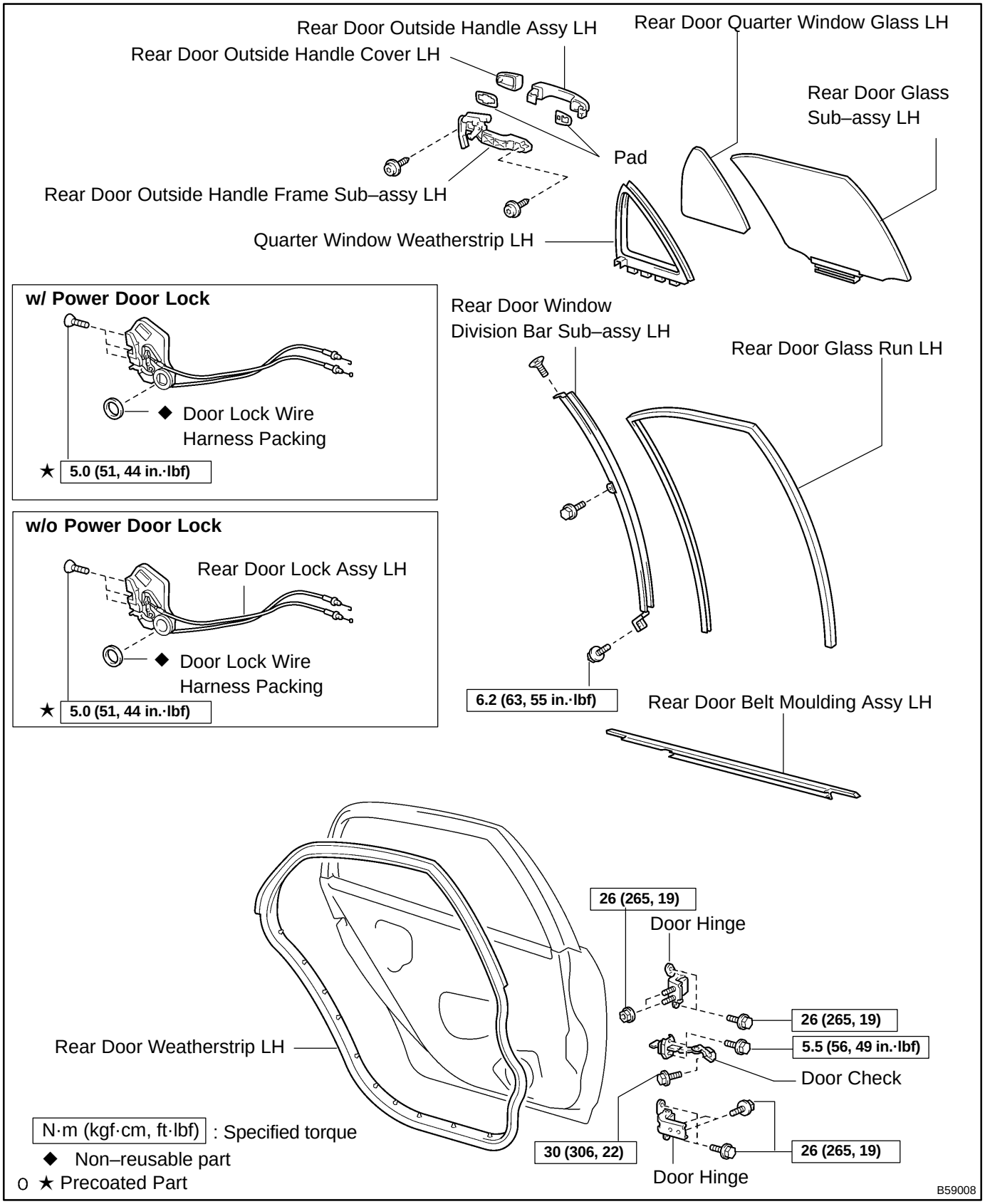

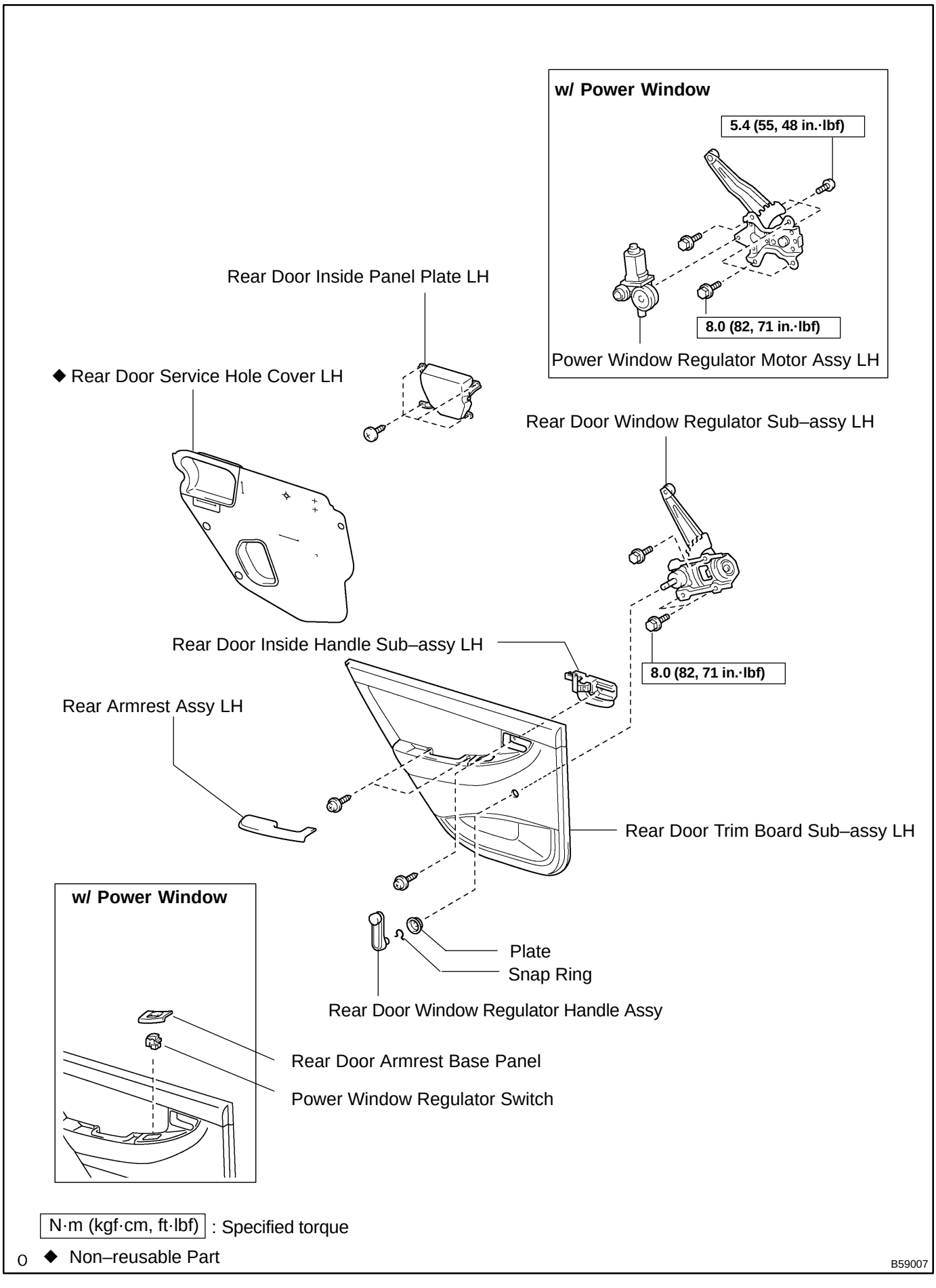
w/ Power Window
5.4 (55, 48 in.·lbf)
8.0 (82, 71 in.·lbf)
Power Window Regulator Motor Assy LH
Rear Door Inside Panel Plate LH
◆ Rear Door Service Hole Cover LH
Rear Door Window Regulator Sub–assy LH
8.0 (82, 71 in.·lbf)
Rear Door Inside Handle Sub–assy LH
Rear Armrest Assy LH
Rear Door Trim Board Sub–assy LH
w/ Power Window
Plate
Snap Ring
Rear Door Window Regulator Handle Assy
Rear Door Armrest Base Panel
Power Window Regulator Switch
N·m (kgf·cm, ft·lbf) : Specified torque
◆ Non–reusable Part
B59007

750DG–02

OVERHAUL

HINT:

- Installation is in the reveres order of the removal. But the installation is indicated only when it has a point.
- In the RH side, work in the same procedure as in the LH side.

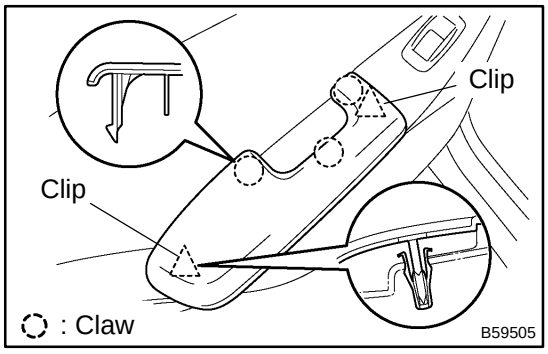

1. REMOVE REAR ARMREST ASSY LH

(a) Using a screwdriver, remove the rear armrest.

HINT:

Tape the screwdriver tip before use.

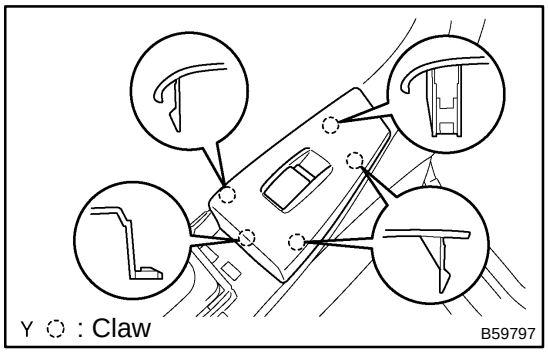

2. REMOVE POWER WINDOW REGULATOR SWITCH ASSY REAR (W/ POWER WINDOW)

(a) Using a screwdriver, remove the power window regulator switch assembly.

HINT:

Tape the screwdriver tip before use.

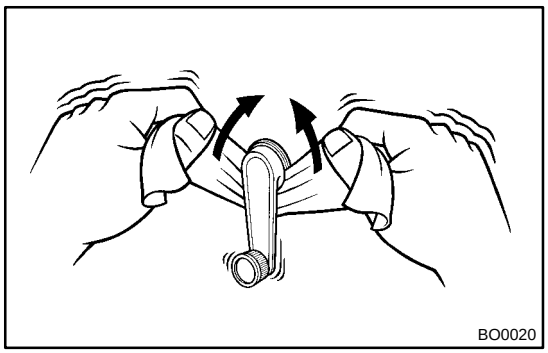

3. REMOVE REAR DOOR WINDOW REGULATOR HANDLE ASSY (W/O POWER WINDOW)

(a) Using a shop rag, remove the snap ring.

(b) Remove the rear door window regulator handle and plate.

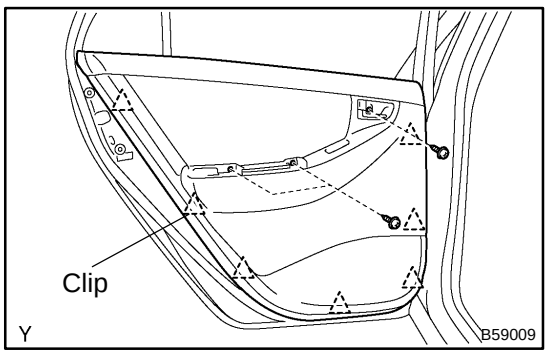

4. REMOVE REAR DOOR TRIM BOARD SUB–ASSY LH

(a) Remove the 3 screws.

(b) Using a screwdriver, disengage the clips, then pull the trim board upward to remove it.

HINT:

Tape the screwdriver tip before use.

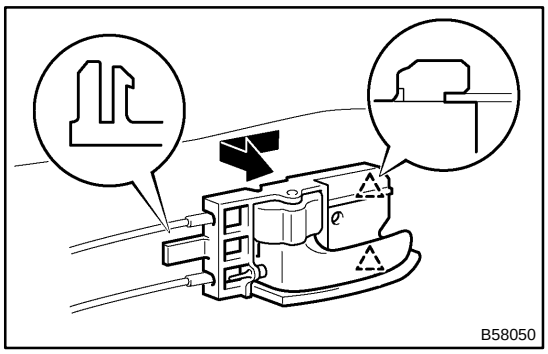

5. REMOVE REAR DOOR INSIDE HANDLE SUB–ASSY LH

(a) Remove the inside handle and then disconnect the 2 cables from the inside handle.

6. REMOVE REAR DOOR SERVICE HOLE COVER LH

(a) Disconnect each connector and remove the rear door service hole cover.

NOTICE:

Remove the remaining tape on the body side.

7. REMOVE REAR DOOR BELT MOULDING ASSY LH (See page 76–13)

8. REMOVE REAR DOOR GLASS RUN LH

(a) Remove the rear door glass run.

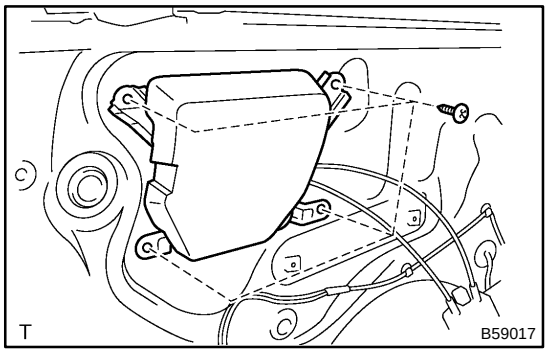

9. REMOVE REAR DOOR INSIDE PANEL PLATE LH

(a) Remove the 4 screws and rear door inside panel plate.

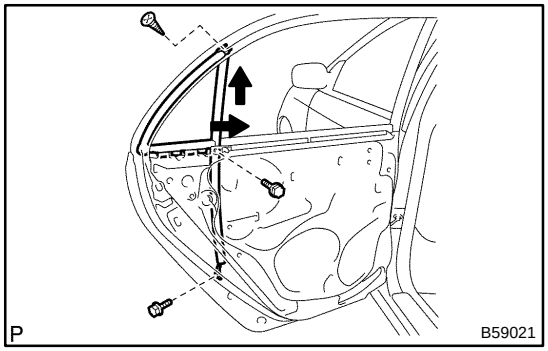

10. REMOVE REAR DOOR WINDOW DIVISION BAR SUB–ASSY LH

(a) Remove the 2 bolts and screw.

(b) Rotate the rear door window division bar by 90° and pull it upward, as shown in the illustration.

11. REMOVE REAR DOOR QUARTER WINDOW GLASS LH

(a) Remove the rear door quarter window glass.

NOTICE:

Do not damage the glass.

(b) Remove the quarter window weatherstrip from the glass.

12. REMOVE REAR DOOR GLASS SUB–ASSY LH

HINT:

Insert a shop rag inside the door panel to prevent the glass from being scratched.

(a) Open the door glass.

(b) Tilt the door glass and disconnect the roller of the regulator from the channel to remove the door glass.

NOTICE:

Do not damage the door glass.

HINT:

Pull the glass upward to remove it.

13. REMOVE REAR DOOR WINDOW REGULATOR SUB–ASSY LH (W/O POWER WINDOW)

(a) Loosen the 4 bolts.

NOTICE:

When the bolts are removed, the rear door window regulator might drop and be deformed.

(b) Remove the 4 bolts and rear door window regulator.

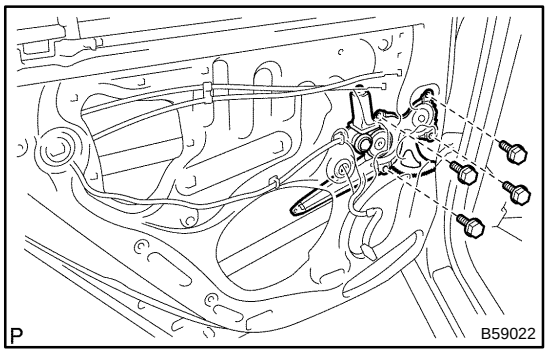

14. REMOVE REAR DOOR WINDOW REGULATOR SUB–ASSY LH (W/ POWER WINDOW)

(a) Disconnect the window regulator connector.

(b) Loosen the 4 bolts.

NOTICE:

When the bolts are removed, the rear door window regulator might drop and be deformed.

(c) Remove the 4 bolts and rear door window regulator.

15. REMOVE POWER WINDOW REGULATOR MOTOR ASSY LH

(a) Using a torx wrench (T30), remove the 3 screws and the motor assembly.

16. REMOVE REAR DOOR LOCK ASSY LH (W/O POWER DOOR LOCK)

(a) Using a torx wrench (T30), remove the 3 screws and the rear door lock assembly.

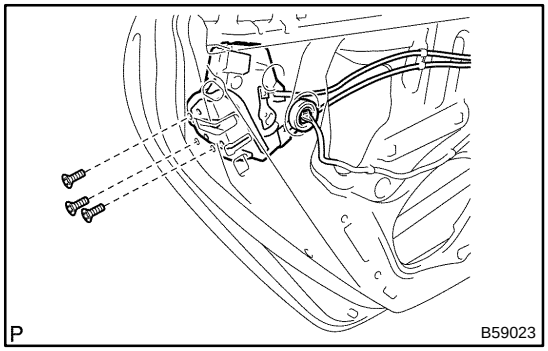

17. REMOVE REAR DOOR W/MOTOR LOCK ASSY LH (W/ POWER DOOR LOCK)

(a) Disconnect the power door lock connector.

(b) Using a torx wrench (T30), remove the 3 screws and the power door lock assembly.

18. REMOVE REAR DOOR OUTSIDE HANDLE COVER LH

(a) Using a torx wrench (T30), loosen the screw and remove the rear door outside handle cover.

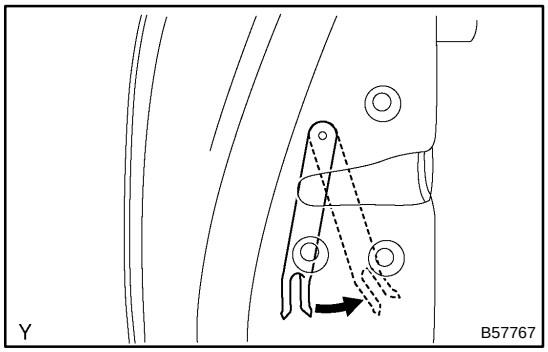

19. REMOVE REAR DOOR OUTSIDE HANDLE ASSY LH

(a) Pull and hold the release plate of the outside handle frame, as shown in the illustration.

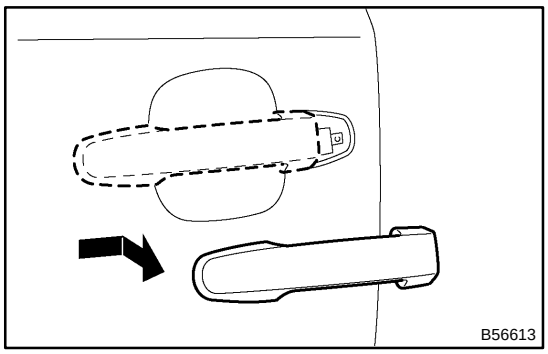

(b) Pushing the outside handle in the arrow mark direction as shown in the illustration, remove the outside handle.

NOTICE:

If the release plate is not pulled and held when removing the outside handle, then the release plate will interfere with the outside handle and it will damage the release plate.

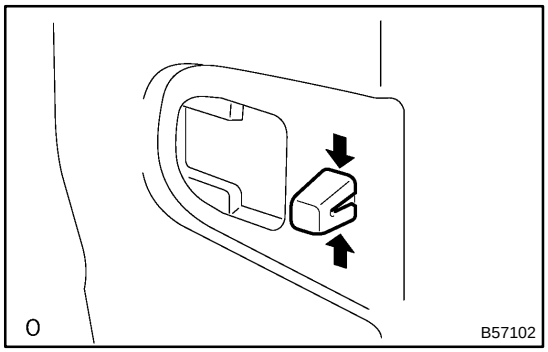

20. REMOVE REAR DOOR OUTSIDE HANDLE FRAME SUB–ASSY LH

(a) Using a torx wrench (T30), loosen the screw.

(b) Using pliers, disengage the clips and remove the outside handle frame, as shown in the illustration.

NOTICE:

Be sure to remove the outside handle together with the clips, because the clips will be damaged if the clips remain attached to the door panel.

21. REMOVE REAR DOOR WEATHERSTRIP LH

(a) Remove the door panel side bolt and disconnect the rear door check assembly.

(b) Using a screwdriver, remove the weatherstrip.

HINT:

Tape the screwdriver tip before use.

22. INSTALL REAR DOOR WEATHERSTRIP LH

(a) Install the weatherstrip.

(b) Install the rear door check assembly with the door panel side bolt.

Torque: 5.5 N·m (56 kgf·cm, 49 in.·lbf)

23. INSTALL REAR DOOR OUTSIDE HANDLE FRAME SUB–ASSY LH

(a) Using a torx wrench (T30), install the outside handle frame with the screw.

Torque: 4.0 N·m (41 kgf·cm, 35 in.·lbf)

24. INSTALL REAR DOOR OUTSIDE HANDLE COVER LH

(a) Using a torx wrench (T30), install the outside handle cover with the screw.

Torque: 4.0 N·m (41 kgf·cm, 35 in.·lbf)

25. INSTALL REAR DOOR LOCK ASSY LH (W/O POWER DOOR LOCK)

(a) Apply MP grease to the sliding and rotating parts of the door lock.

(b) Apply adhesive to the 3 screws.

Part No.08833–00070, THREE BOND 1324 or equivalent

(c) Using a torx wrench (T30), install the lock assembly with the 3 screws.

Torque: 5.0 N·m (51 kgf·cm, 44 in.·lbf)

26. INSTALL REAR DOOR W/MOTOR LOCK ASSY LH (W/ POWER DOOR LOCK)

(a) Install a new door lock wire harness packing.

NOTICE:

- **If reusing the removed lock with rear door motor, the packing in the connecting part should be replaced with a new one.**
- **Be careful that no grease and dirt will stick to the packing surface in the connecting part.**
- **Reusing the removed packing or using a damaged packing will cause water to penetrate through the connecting part, and it will result in a malfunction of the door lock.**

(b) Engage the lock assembly with door motor with the release plate of the outside handle, and then set it to the door panel.

NOTICE:

Make sure that the release plate of the outside handle frame is securely engaged with the lock assembly.

(c) Apply MP grease to the sliding and rotating parts of the door lock.

(d) Apply adhesive to the 3 screws.
Part No.08833–00070, THREE BOND 1324 or equivalent

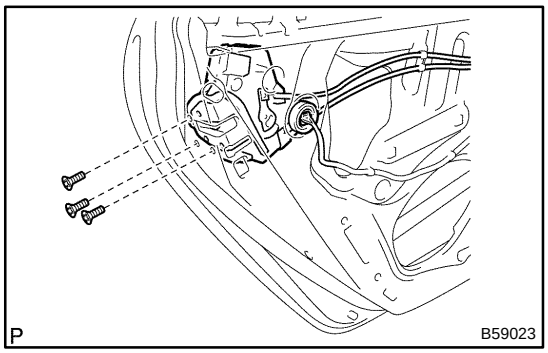

(e) Using a torx wrench (T30), install the door lock assembly with the 3 screws and bolt.
Torque: 5.0 N·m (51 kgf·cm, 44 in.·lbf)

(f) Connect the power door lock connector.

27. INSTALL POWER WINDOW REGULATOR MOTOR ASSY LH (W/ POWER WINDOW)

(a) Using a torx wrench (T30), install the power window regulator motor assembly with the 3 screws.
Torque: 5.4 N·m (55 kgf·cm, 48 in.·lbf)

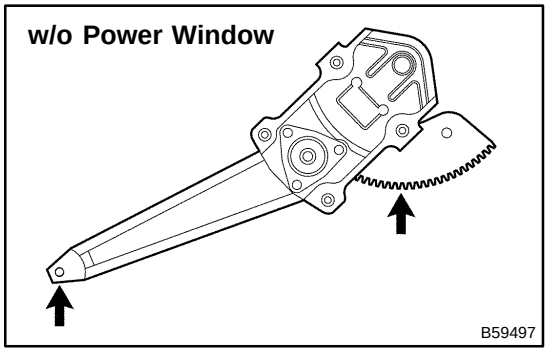

28. INSTALL REAR DOOR WINDOW REGULATOR SUB–ASSY LH (W/O POWER WINDOW)

(a) Apply MP grease to the sliding and rotating parts of the window regulator.

NOTICE:

Do not apply grease to the spring of the window regulator.

(b) Install the rear door window regulator with the 4 bolts.
Torque: 8.0 N·m (82 kgf·cm, 71 in.·lbf)

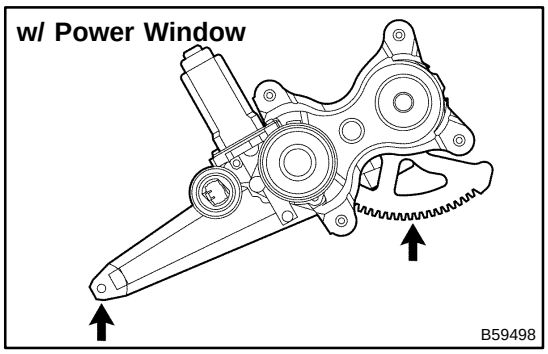

29. INSTALL REAR DOOR WINDOW REGULATOR SUB–ASSY LH (W/ POWER WINDOW)

(a) Apply MP grease to the sliding and rotating parts of the window regulator.

NOTICE:

Do not apply grease to the spring of the window regulator.

(b) Apply the window regulator to the 4 regulator installation holes on the front door panel, temporarily install the window regulator with the installation bolts.

(c) Tighten the 4 bolts and the temporarily installed bolt.
Torque: 8.0 N·m (82 kgf·cm, 71 in.·lbf)

(d) Connect the window regulator connector.

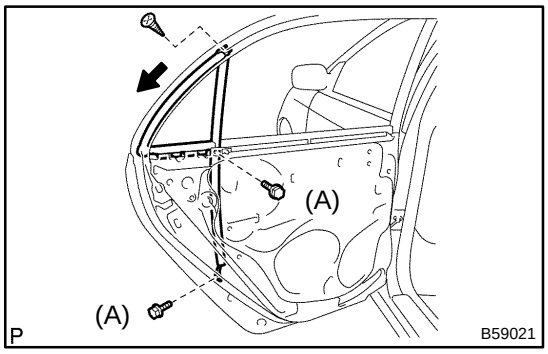

30. INSTALL REAR DOOR WINDOW DIVISION BAR SUB–ASSY LH

(a) Insert the door window division bar to the door panel, then rotate it by 90°.

(b) Install the bolt and 3 screws.
Torque:
Bolt A: 6.2 N·m (63 kgf·cm, 55 in.·lbf)

31. INSTALL REAR DOOR GLASS SUB–ASSY LH (W/ POWER WINDOW)

HINT:

Insert a shop rag inside the door panel to prevent the glass from being scratched.

(a) Tilt the door glass and connect the roller of the regulator to the glass channel to install the door glass.

(b) Inspect the power window operation.

(1) Connect the power window switch to the wire harness and turn the ignition switch ON.

(2) Repeat UP and DOWN operation several times in the manual operation.

(3) Check if AUTO UP →AUTO DOWN operates in the automatic operation.

HINT:

- Note that the jam protection function does not operate just after resetting.
- Reset the regulator again when performing the reverse operation after closing the window fully in the AUTO UP operation.

32. INSPECT POWER WINDOW FUNCTION (W/ POWER WINDOW) (See page 70–2)

33. INSTALL REAR DOOR SERVICE HOLE COVER LH

(a) Install a new service hole cover to the door panel.

HINT:

- When installing the service hole cover, pull out the links and connectors through the service hole cover.
- There should be no wrinkles or folds after attaching the service hole cover.
- After attaching the service hole cover, sealing condition should be confirmed.

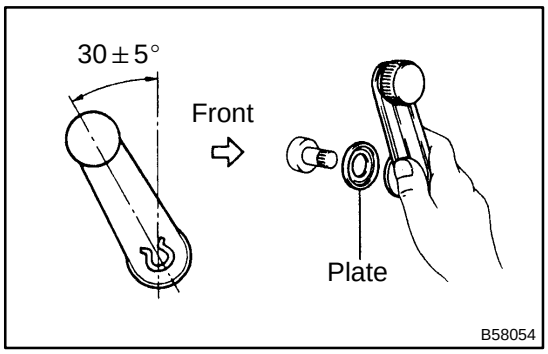

34. INSTALL REAR DOOR WINDOW REGULATOR HANDLE ASSY (W/O POWER WINDOW)

(a) Install the regulator handle with the snap ring.

HINT:

With the door window fully closed, install the plate and regulator handle with the snap ring as shown in the illustration.

BODY ROCKER PANEL MOULDING LH

760I0–02

REPLACEMENT

HINT:

Use the same procedures for the RH side and LH side.

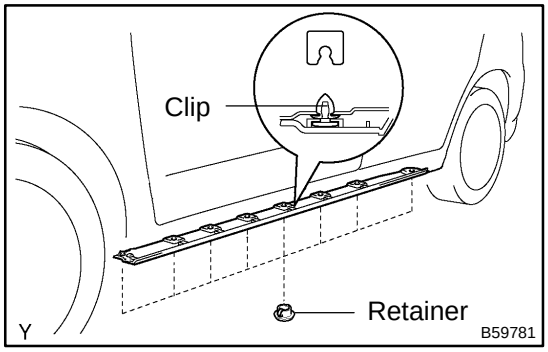

1. REMOVE BODY ROCKER PANEL MOULDING LH

(a) Remove the 8 retainers.

(b) Using a screwdriver, remove the moulding.

HINT:

Tape the screwdriver tip before use.

(c) Remove the 7 clips from the moulding.

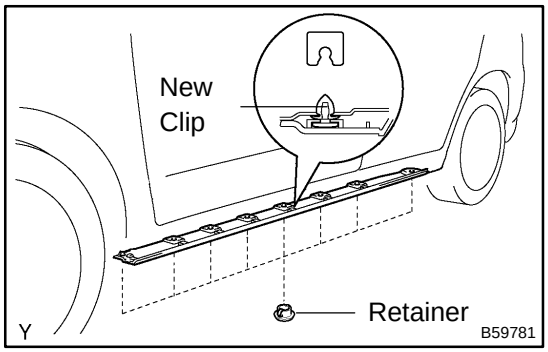

2. INSTALL BODY ROCKER PANEL MOULDING LH

(a) Install the moulding with 7 new clips.

(b) Install the 8 retainer to the moulding.

FRONT DOOR BELT MOULDING ASSY LH

760I8–02

REPLACEMENT

HINT:

- The installation procedures are the removal procedures in reverse order.
- Use the same procedures for the RH side and LH side.

1. **REMOVE FRONT ARMREST ASSY LH (See page 75–7)**
2. **REMOVE POWER WINDOW REGULATOR MASTER SWITCH ASSY (W/ POWER WINDOW) (See page 75–7)**
3. **REMOVE FRONT ARMREST BASE PANEL UPPER LH (W/O POWER WINDOW) (See page 75–7)**
4. **REMOVE FRONT DOOR WINDOW REGULATOR HANDLE ASSY (W/O POWER WINDOW) (See page 75–7)**
5. **REMOVE FRONT DOOR LOWER FRAME BRACKET GARNISH LH (See page 75–7)**
6. **REMOVE FRONT DOOR TRIM BOARD SUB–ASSY LH (See page 75–7)**

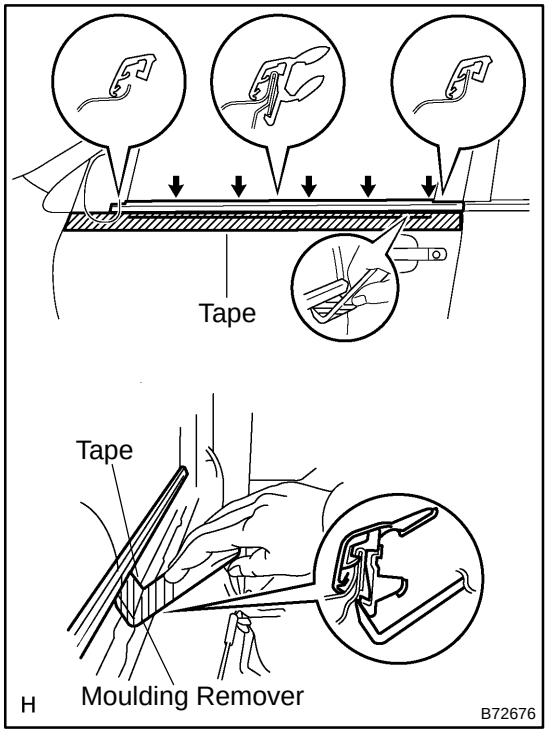

7. **REMOVE FRONT DOOR BELT MOULDING ASSY LH**

(a) Put protective tape under the weatherstrip.

(b) Using a moulding remover, pry out the weatherstrip as shown in the illustration.

HINT:

Tape the moulding remover tip before use.

FRONT BUMPER

760HX–02

COMPONENTS

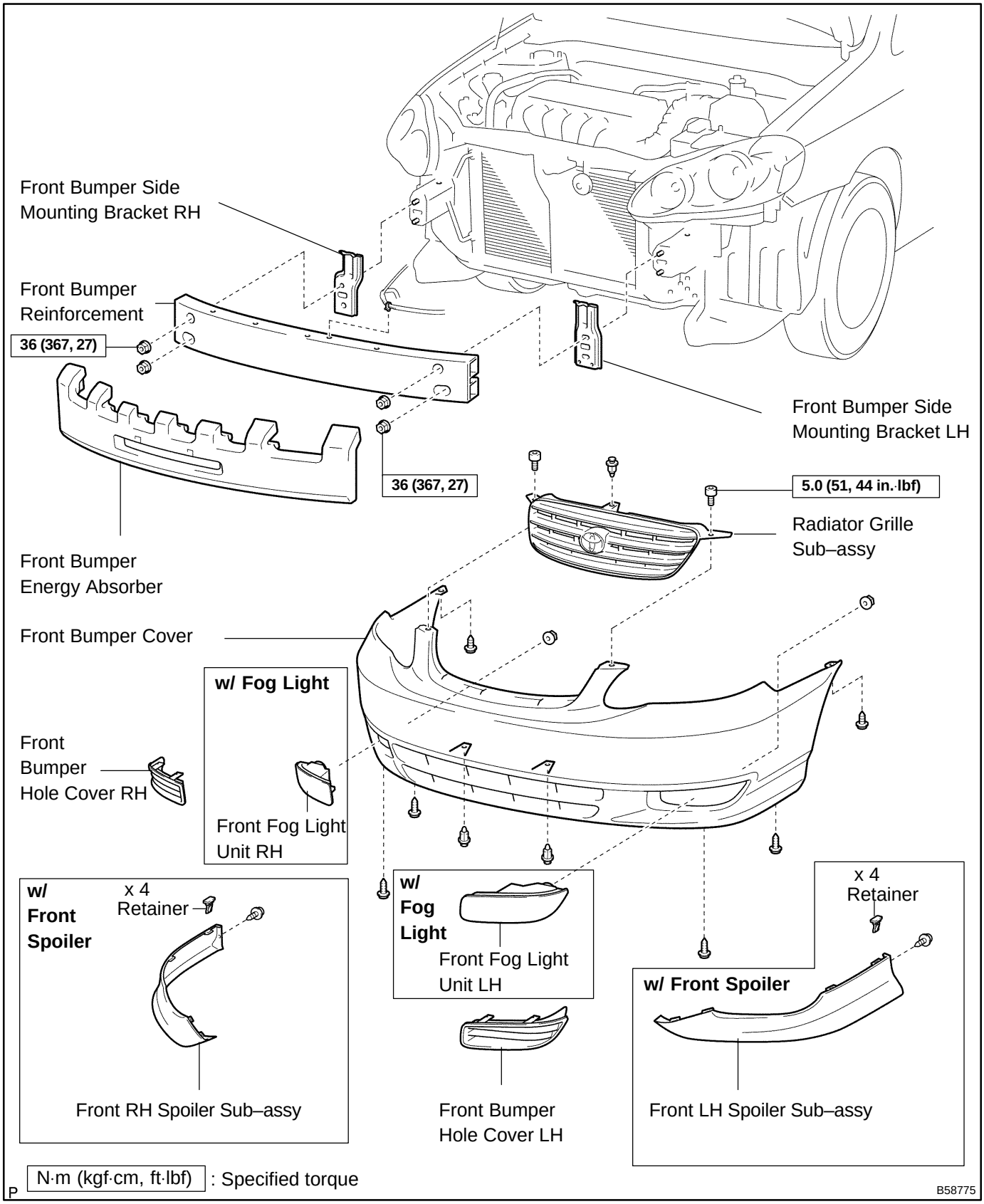

760HY–02

REPLACEMENT

HINT:

Installation is in the reverse order of the removal. But the installation is indicated only when it has a point.

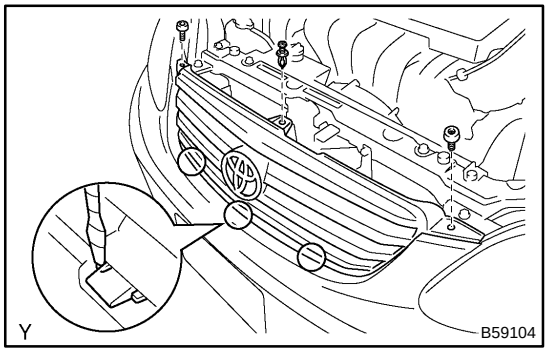

1. REMOVE RADIATOR GRILLE SUB–ASSY

(a) Remove the 2 bolts and clip.

(b) Using a screwdriver, remove the radiator grille.

HINT:

Tape the screwdriver tip before use.

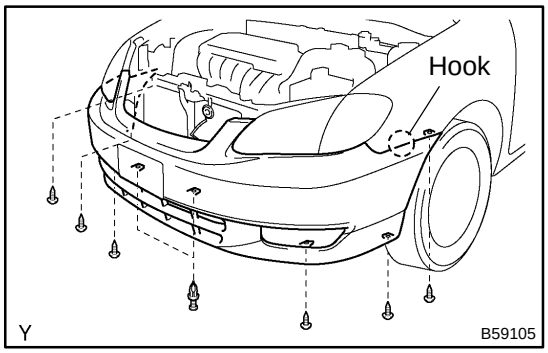

2. REMOVE FRONT BUMPER COVER

(a) Remove the 6 screws and 2 clips.

(b) Disengage the hook, and remove the front bumper cover.

(c) w/ Fog light:

Disconnect the fog light connectors.

3. REMOVE FRONT BUMPER ENERGY ABSORBER

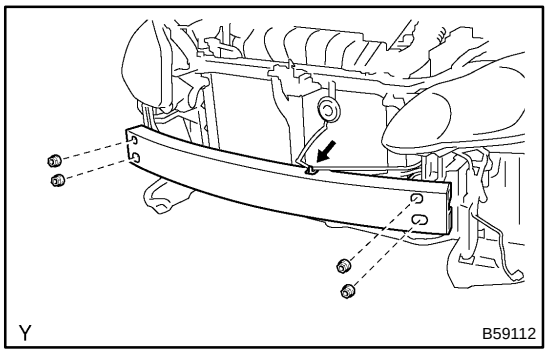

4. REMOVE FRONT BUMPER REINFORCEMENT

(a) Disconnect the wire harness clamp.

(b) Remove the 4 nuts and front bumper reinforcement.

5. REMOVE FRONT BUMPER SIDE MOUNTING BRACKET LH

6. REMOVE FRONT BUMPER SIDE MOUNTING BRACKET RH

7. REMOVE FRONT LH SPOILER SUB–ASSY (W/ FRONT SPOILER)

(a) Remove the screw and 4 retainers.

(b) Disengage the clip and front LH spoiler.

(c) Employ the same manner described above to the other side.

8. REMOVE FRONT RH SPOILER SUB–ASSY (W/ FRONT SPOILER)

9. REMOVE FOG LIGHT UNIT LH (W/ FOG LIGHT)

(a) Remove the nut and fog light unit.

(b) Employ the same manner described above to the other side.

10. REMOVE FOG LIGHT UNIT RH (W/ FOG LIGHT)

11. REMOVE FRONT BUMPER HOLE COVER LH (W/O FOG LIGHT)

12. REMOVE FRONT BUMPER HOLE COVER RH (W/O FOG LIGHT)

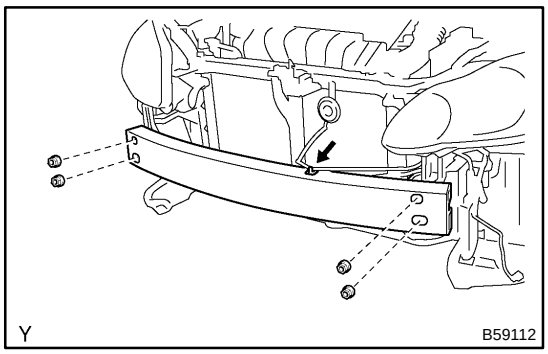

13. INSTALL FRONT BUMPER REINFORCEMENT

(a) Install the front bumper reinforcement with the 4 nuts.
Torque: 36 N·m (367 kgf·cm, 27 ft·lbf)

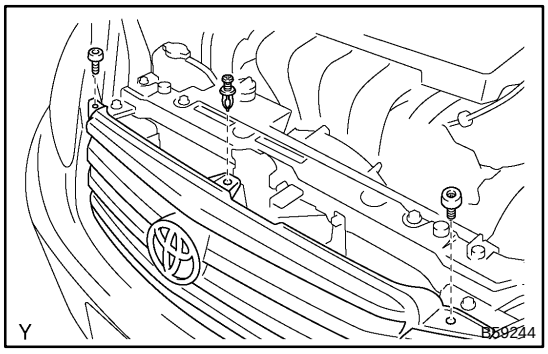

14. INSTALL RADIATOR GRILLE SUB–ASSY

(a) Install the radiator grille with the 2 bolts and clip.
Torque: 5.0 N·m (51 kgf·cm, 44 in.·lbf)

LUGGAGE COMPARTMENT DOOR GARNISH OUTSIDE

760I3–02

REPLACEMENT

HINT:

The installation procedures are the removal procedures in reverse order. However, only installation procedures requiring additional information are included.

1. REMOVE LUGGAGE COMPARTMENT LOCK CYLINDER & KEY SET

(a) Remove the 2 nuts and luggage compartment lock cylinder.

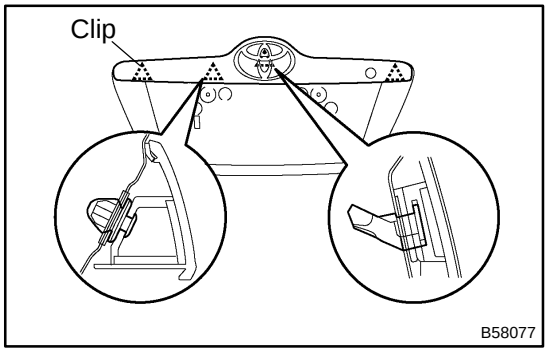

2. REMOVE LUGGAGE COMPARTMENT DOOR GARNISH OUTSIDE

(a) Remove the nut.

(b) Remove the 4 clips and garnish.

3. INSTALL SYMBOL EMBLEM

(a) Using white gasoline, clean the garnish installation surface.

(b) Using a heat light, heat the garnish and emblem to 20 to 30°C (68 to 86°F).

NOTICE:

Do not heat the garnish and emblem excessively.

(c) Install the emblem with the 4 clips.

NAME PLATE

REPLACEMENT

760HU–02

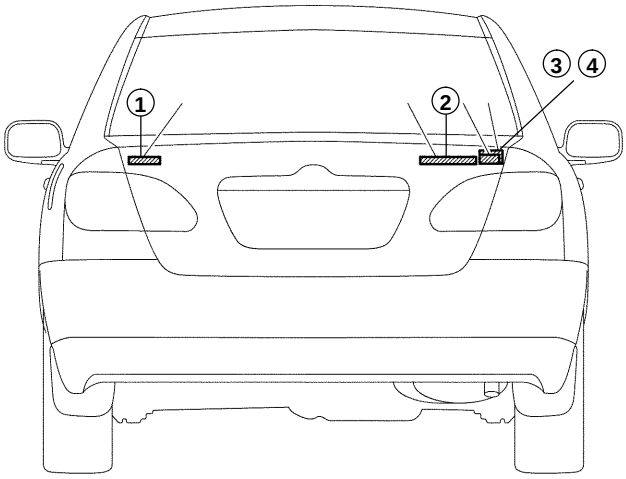

① Luggage Compartment Door Name Plate No. 1

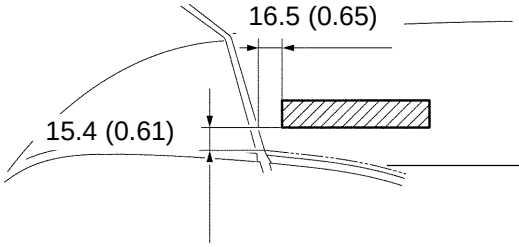

② Luggage Compartment Door Name Plate No. 2

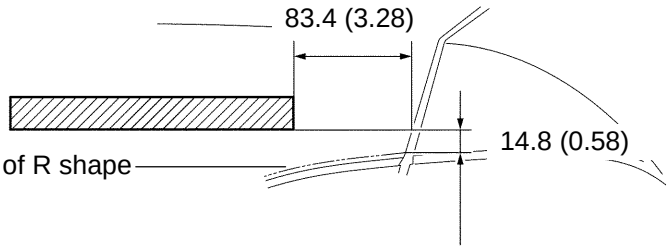





③④ Luggage Compartment Door Plate No. 4

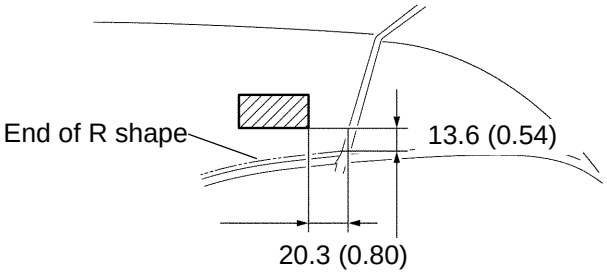

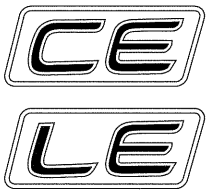

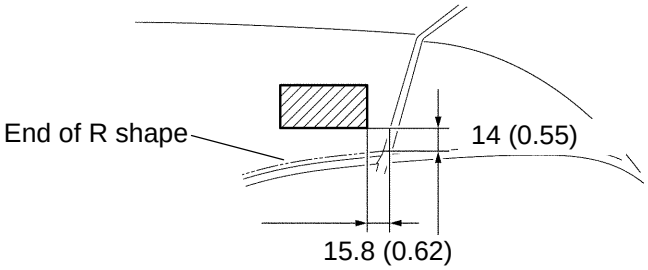



mm (in.)

P

B59289

OUT SIDE MOULDING

7610C–02

REPLACEMENT

HINT:
Use the same procedures for the RH side and LH side.

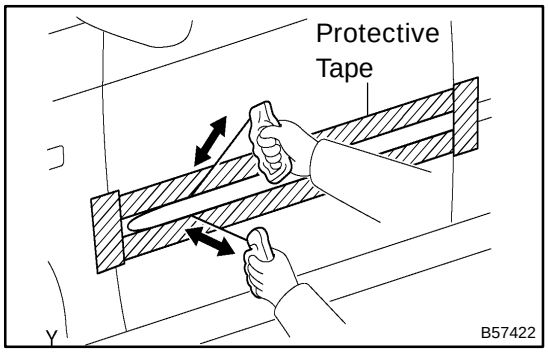

1. REMOVE OUTSIDE MOULDING

(a) Put protective tape around the moulding.
(b) Insert a piano wire between the vehicle body and moulding.
(c) Tie objects that can serve as handles (for example, wooden blocks) to all wire ends.
(d) Pull the piano wire and scrape off the double–sided tape that holds the moulding to the vehicle body.

NOTICE:

- **If reusing the moulding, take care not to damage the moulding.**
- **Becareful not to damage the body.**

(e) Remove the moulding.

2. INSTALL OUTSIDE MOULDING LH

(a) Using a heat light, heat the body.
Heating temperature: 40 to 60°C (104 to 140°F)

NOTICE:

Do not heat the body excessively.

(b) Remove the double–sided tape from the body.
(c) Wipe off the stains with cleaner.
(d) Clean the moulding (if reusing).
(1) Using a heat light, heat the body.
Heating temperature: 20 to 30°C (68 to 86°F)

NOTICE:

Do not heat the moulding excessively.

(2) Remove the double–sided tape from the moulding.
(3) Wipe off the stains with cleaner.
(4) Apply new adhesive tape to the moulding as shown in the illustration.

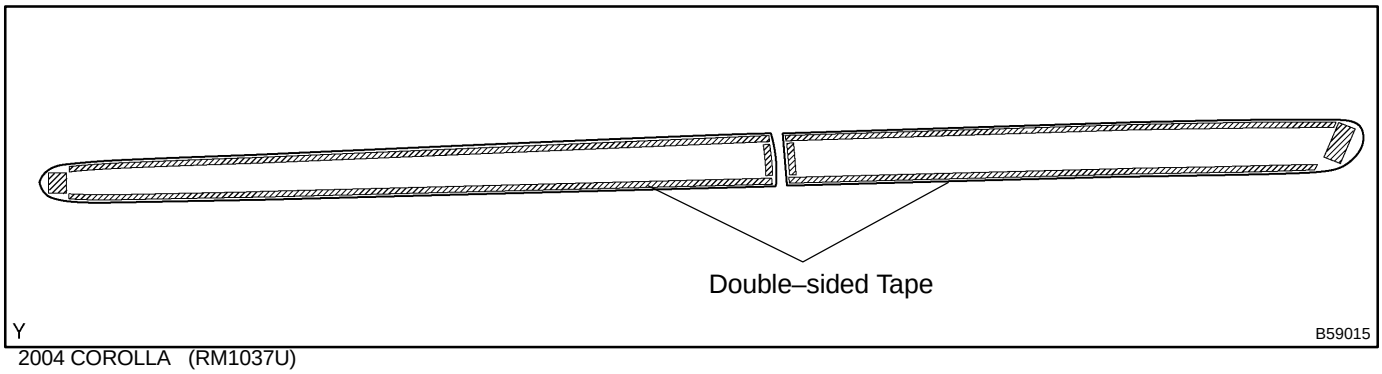

(e) Using a heat light, heat the body and moulding.
Heating temperature:

Item	Temperature
Body	40 to 60°C (104 to 140°F)
Moulding	20 to 30°C (68 to 86°F)

NOTICE:
Do not heat the body and moulding excessively.

(f) Remove the peeling paper from the double–sided tape on the moulding face.

NOTICE:
When the peeling paper is removed, take care that no dirt or dust contaminates the adhesive.

(g) Affix the moulding to the body, as shown in the illustration.

NOTICE:
Do not apply excessive force onto the moulding. Use steady pressure with your thumbs.

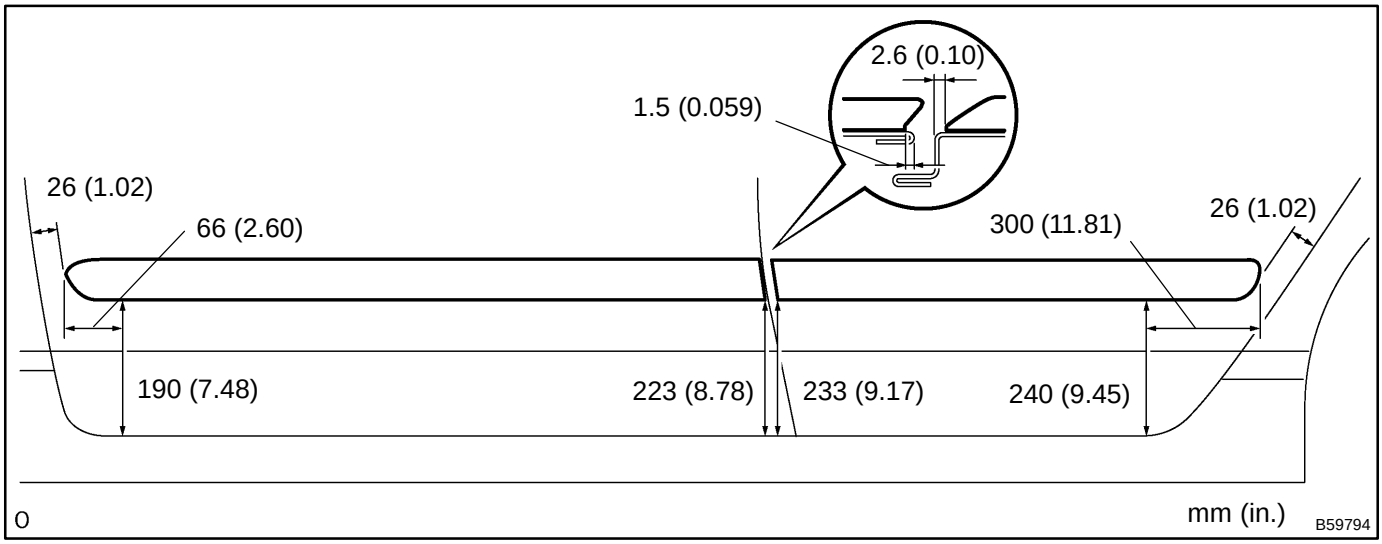

REAR BUMPER

COMPONENTS

760HZ–02

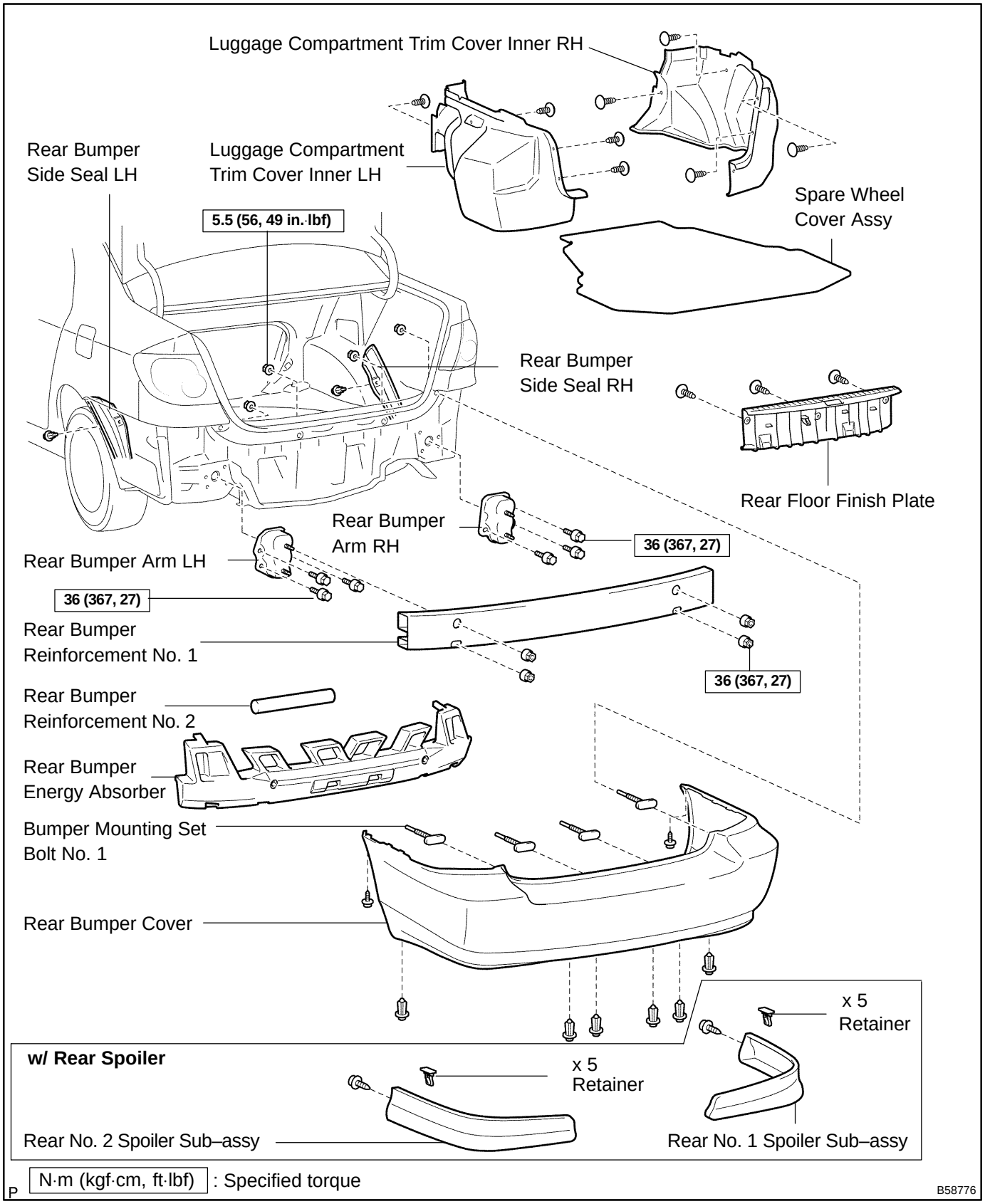

760I7–02

REPLACEMENT

HINT:

Installation is in the reverse order of the removal. But the installation is indicated only when it has a point.

1. REMOVE SPARE WHEEL COVER ASSY

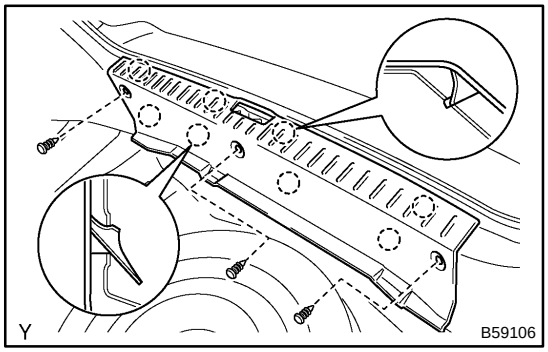

2. REMOVE REAR FLOOR FINISH PLATE

(a) Remove the 3 clips.

(b) Using a moulding remover, remove the rear floor finish plate.

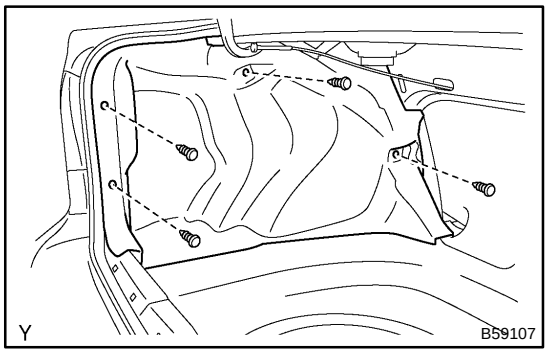

3. REMOVE LUGGAGE COMPARTMENT TRIM COVER INNER LH

(a) Remove the 4 clips and the luggage compartment trim cover.

(b) Employ the same manner described above to the other side.

4. REMOVE LUGGAGE COMPARTMENT TRIM COVER INNER RH

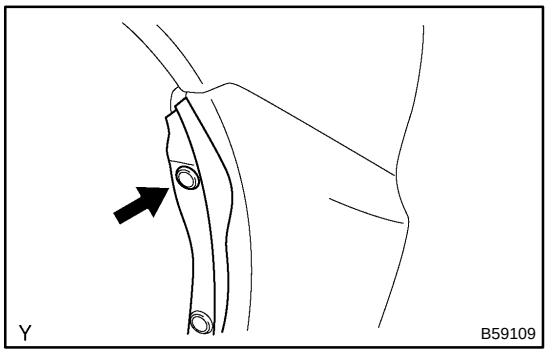

5. DISCONNECT REAR BUMPER SIDE SEAL LH

(a) Remove the clip and a part of the rear bumper side seal, as shown in the illustration.

HINT:

Do not remove the lower side clip.

(b) Employ the same manner described above to the other side.

6. DISCONNECT REAR BUMPER SIDE SEAL RH

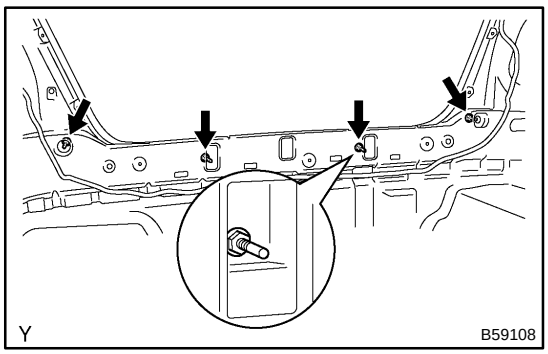

7. REMOVE REAR BUMPER COVER

(a) Remove the 4 nuts.

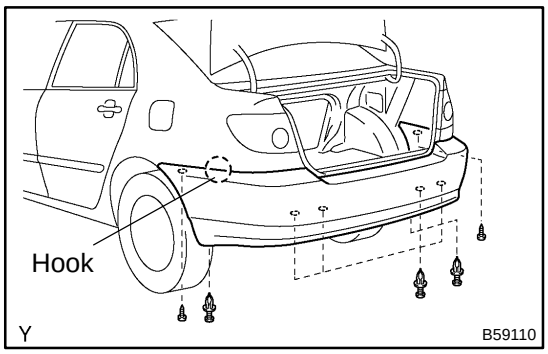

(b) Remove the 2 screws and 6 clips.
(c) Disengage the hook, and remove the rear bumper cover.

8. REMOVE REAR BUMPER ENERGY ABSORBER
9. REMOVE REAR BUMPER REINFORCEMENT NO.2
(a) Remove the rear bumper reinforcement No. 2 from the rear bumper energy absorber.
10. REMOVE REAR NO.2 SPOILER SUB–ASSY (W/ REAR SPOILER)
(a) Remove the 5 retainers, screw and the rear spoiler.
(b) Employ the same manner described above to the other side.
11. REMOVE REAR NO.1 SPOILER SUB–ASSY (W/ REAR SPOILER)
12. REMOVE BUMPER MOULDING SET BOLT NO.1
13. REMOVE REAR BUMPER REINFORCEMENT NO.1
(a) Remove the 4 nuts and rear bumper reinforcement No. 1.
14. REMOVE REAR BUMPER ARM LH
(a) Remove the 3 bolts and rear bumper arm.
(b) Employ the same manner described above to the other side.
15. REMOVE REAR BUMPER ARM RH
16. INSTALL REAR BUMPER ARM LH
(a) Install the rear bumper arm with the 3 bolts.
Torque: 36 N·m (367 kgf·cm, 27 ft·lbf)
(b) Employ the same manner described above to the other side.
17. INSTALL REAR BUMPER ARM RH
18. INSTALL REAR BUMPER REINFORCEMENT NO.1
(a) Install the rear bumper reinforcement No. 1 with the 4 nuts.
Torque: 36 N·m (367 kgf·cm, 27 ft·lbf)
19. INSTALL REAR BUMPER COVER
(a) Install the rear bumper cover with the 2 screws, 8 clips and 4 nuts.
Torque: 5.5 N·m (56 kgf·cm, 49 in.·lbf) for nuts

REAR DOOR BELT MOULDING ASSY LH

760I5–02

REPLACEMENT

HINT:

- The installation procedures are the removal procedures in reverse order.
- Use the same procedures for the RH side and LH side.

1. **REMOVE REAR ARMREST ASSY LH (See page 75–20)**
2. **REMOVE POWER WINDOW REGULATOR SWITCH ASSY REAR (W/ POWER WINDOW) (See page 75–20)**
3. **REMOVE REAR DOOR WINDOW REGULATOR HANDLE ASSY (W/O POWER WINDOW) (See page 75–20)**
4. **REMOVE REAR DOOR TRIM BOARD SUB–ASSY LH (See page 75–20)**

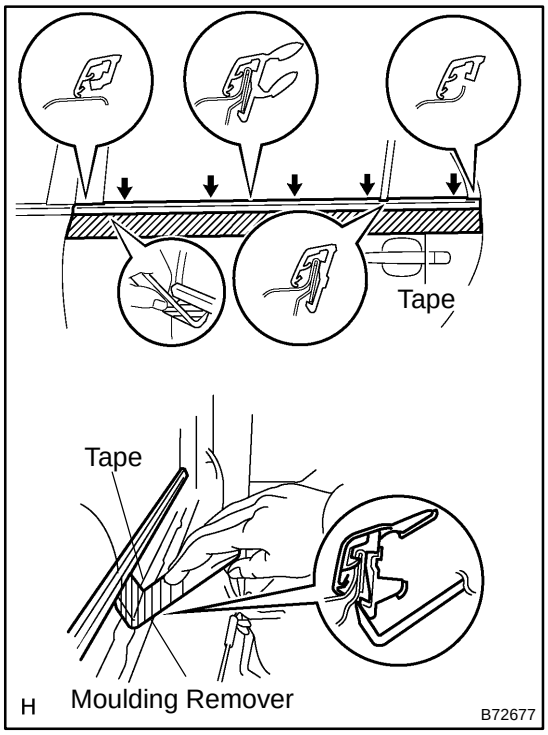

5. **REMOVE REAR DOOR BELT MOULDING ASSY LH**

(a) Put protective tape under the weatherstrip.

(b) Using a moulding remover, pry out the weatherstrip as shown in the illustration.

HINT:

Tape the moulding remover tip before use.

REAR SPOILER

760I1–02

REPLACEMENT

HINT:

Installation is in the reverse order of the removal. But the installation is indicated only when it has a point.

1. REMOVE LUGGAGE COMPARTMENT DOOR COVER

2. REMOVE REAR SPOILER

(a) Remove the 2 screws.

(b) Disconnect the wire harness connector.

(c) Put protective tape.

(d) Using a heat light, heat the spoiler to 40 – 60°C (104 – 140°F).

(e) Tie both piano wire ends to a wooden block or a similar object.

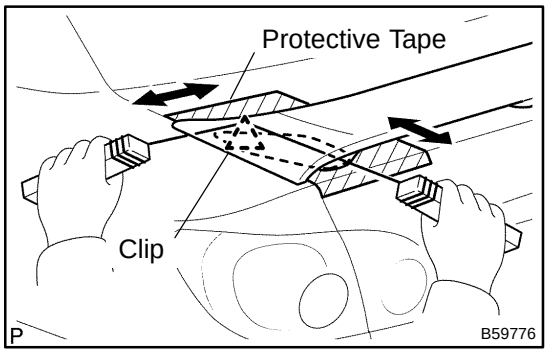

(f) Scrape the spoiler protector off by pulling the piano wire as shown in the illustration.

NOTICE:

- **If reusing the rear spoiler, take care not to damage the rear spoiler.**
- **Do not damage the body and wire harness.**

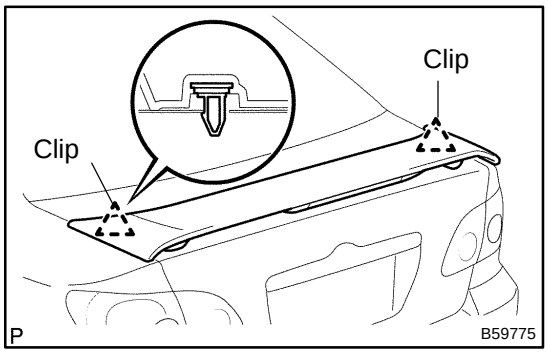

(g) Remove the 2 clips, wire harness grommet and rear spoiler.

3. REMOVE CENTER STOP LAMP ASSY

(a) Remove the 2 bolts and the center stop lamp assembly.

4. INSTALL REAR SPOILER

(a) Using a heat light, heat the body mounting surface to 40 – 60°C (104 – 140°F).

NOTICE:

Do not heat the body excessively.

(b) Remove the protective tape from the body.

(c) Wipe off the stains with cleaner.

(d) Clean the rear spoiler (if reusing the rear spoiler).

(1) Using a heat light, heat the rear spoiler to 40 – 60°C (104 – 140°F).

NOTICE:

Do not heat the rear spoiler excessively.

(2) Remove the rear spoiler protector from the rear spoiler.

(3) Wipe off the stains with cleaner.

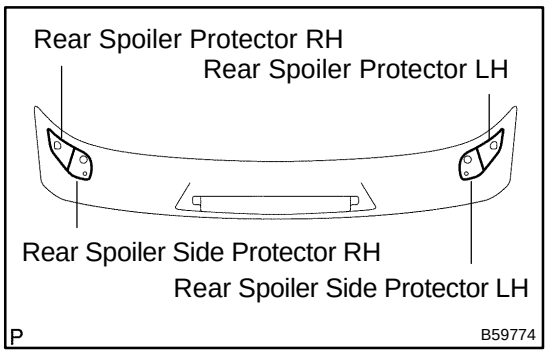

(4) Install 4 new rear spoiler protectors to the rear spoiler as shown in the illustration.

ROOF DRIP SIDE FINISH MOULDING CENTER LH

760I2–02

REPLACEMENT

HINT:

- Use the same procedures for the RH side and LH side.
- The installation procedures are the removal procedures in reverse order. However, only installation procedures requiring additional information are included.

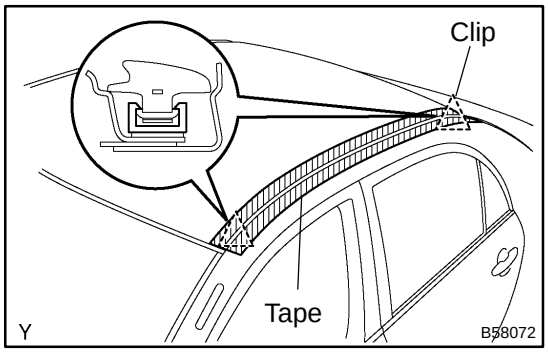

1. REMOVE ROOF DRIP SIDE FINISH MOULDING CENTER LH

(a) Apply protective tape onto the circumference of the moulding for protection.

(b) Using a remover for the roof moulding, release the engagements of the clips both in the front and rear ends of the moulding. Then remove the moulding.

NOTICE:

- **Do not remove the clips.**
- **If clips are damaged during removal or removed accidentally, replace them.**

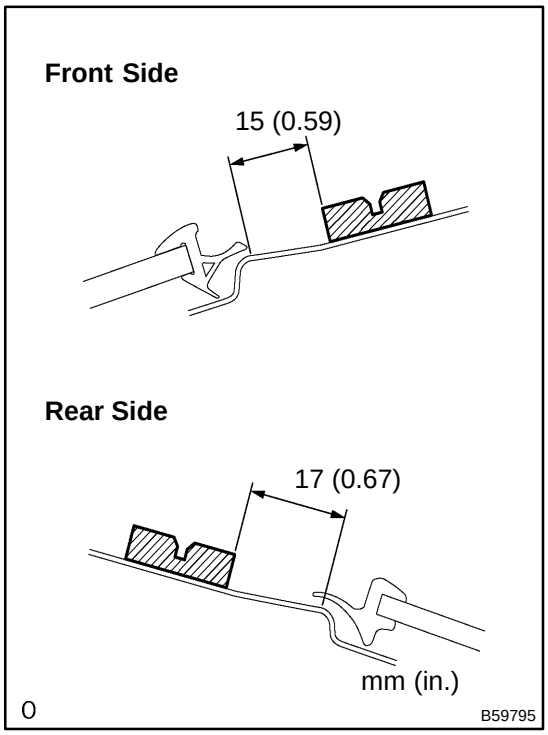

2. INSTALL ROOF DRIP SIDE FINISH MOULDING CLIP NO.1

NOTICE:

Step 2 should be performed only when replacing the clips.

(a) Remove the double–sided tape that remains on the mounting surface of the body, and then clean the surface with white gasoline.

(b) Using a heat light, heat the clip installation surfaces of the body.

Heating temperature:

Item	Temperature
Body	40 to 60°C (104 to 140°F)
Moulding	20 to 30°C (68 to 86°F)

NOTICE:

Do not heat the body and moulding excessively.

(c) Set new clips in the positions as shown in the illustration, and press–fit those clips by hand to install them.

HINT:

Clips for the roof drip side finish moulding are supply parts.

(d) After press–fitting the clips, wait at last 30 minutes. Then install the moulding.

HINT:

- Initial hardening time: 30 minutes
- Prefect hardening time: 24 hours

ROOF HEADLINING ASSY

760HV–02

COMPONENTS

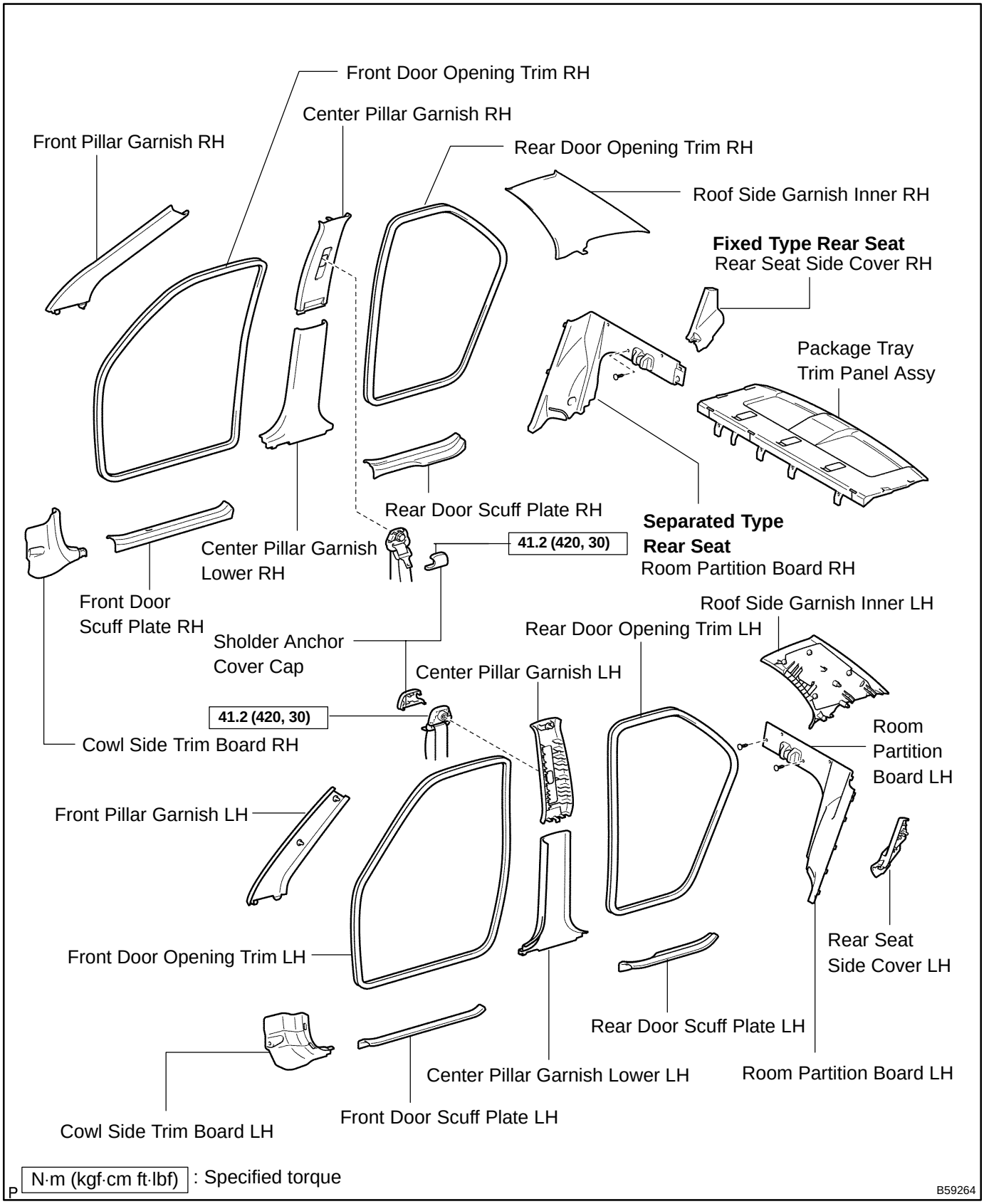

w/ Sliding Roof

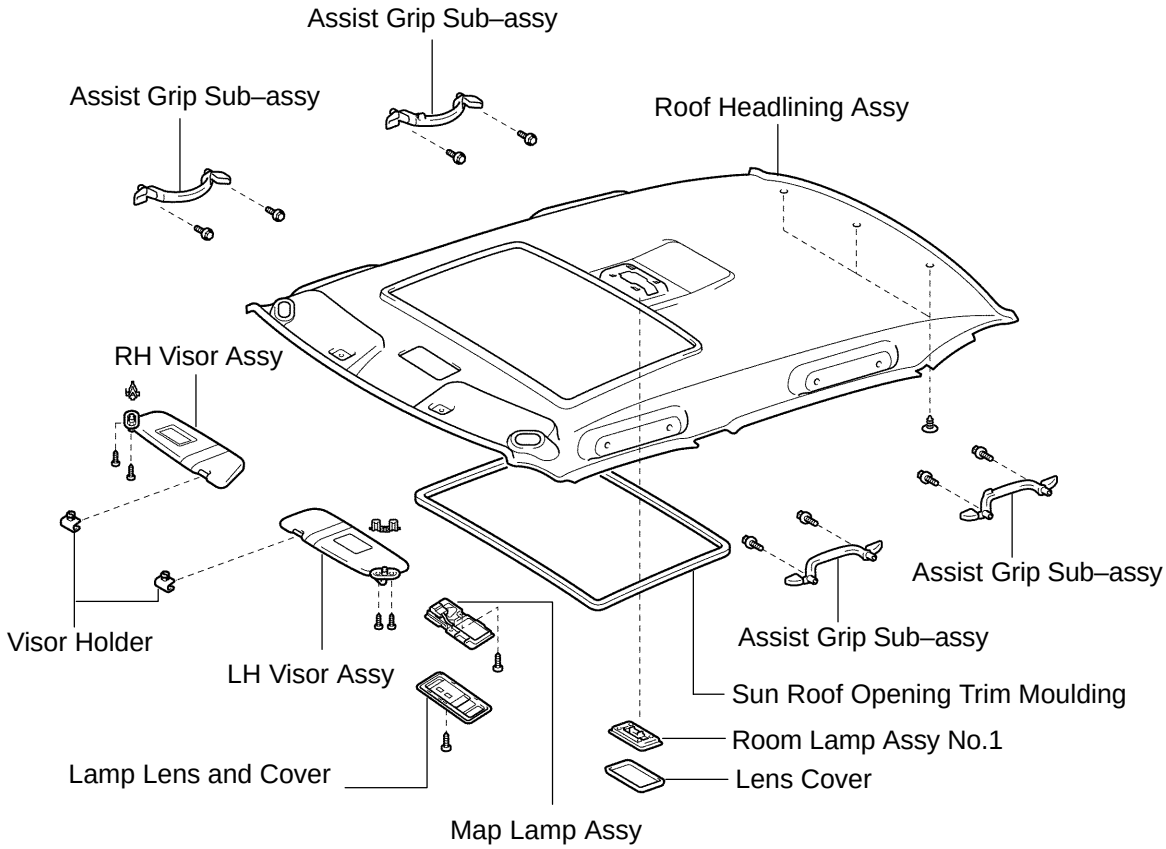

P B59298

w/o Sliding Roof

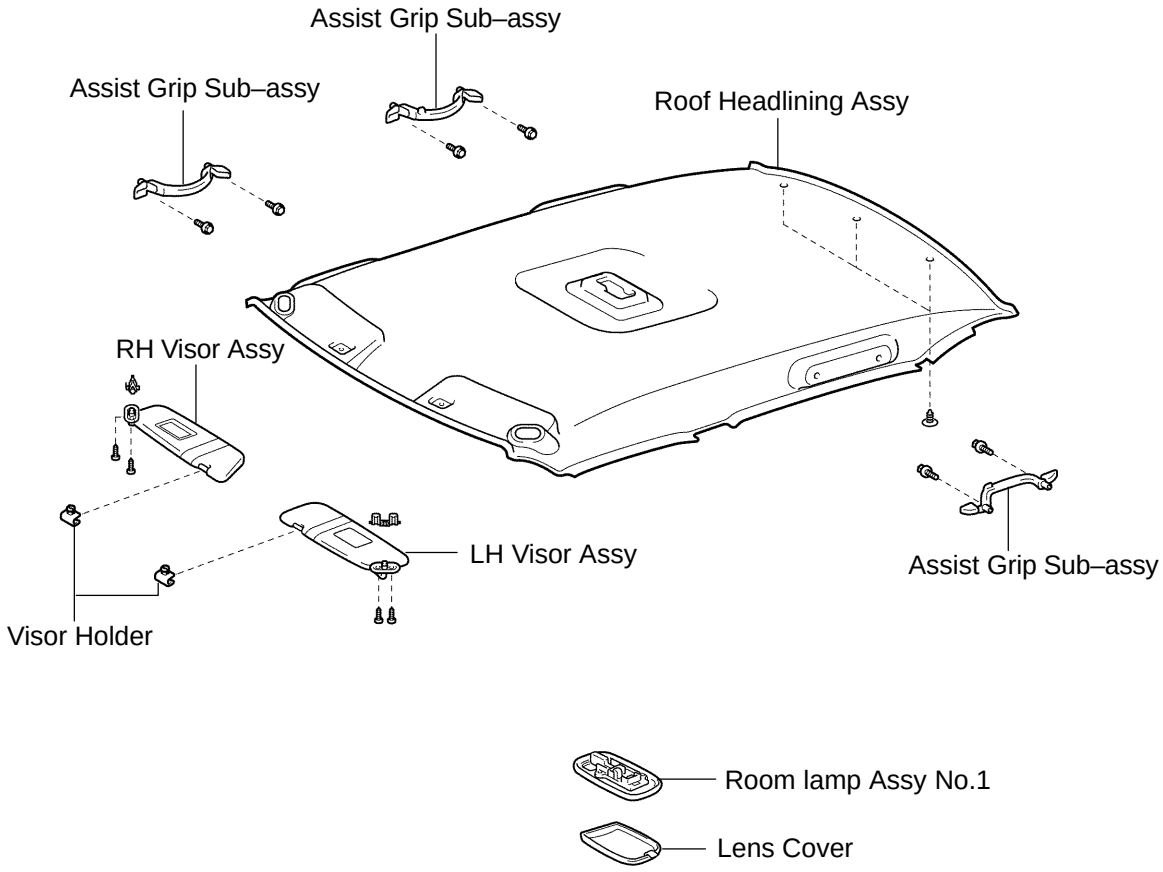

P

B59265

REPLACEMENT

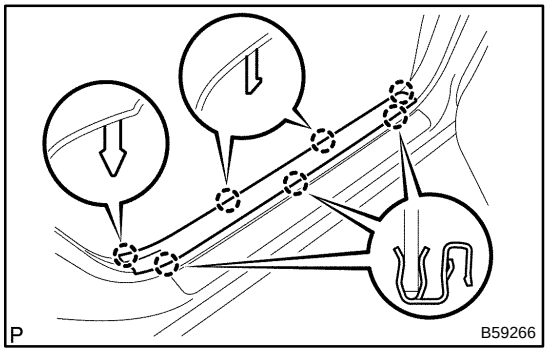

1. REMOVE FRONT DOOR SCUFF PLATE RH

(a) Using a screwdriver, remove the front door scuff plate RH.

HINT:

Tape the screwdriver tip before use.

2. REMOVE FRONT DOOR SCUFF PLATE LH

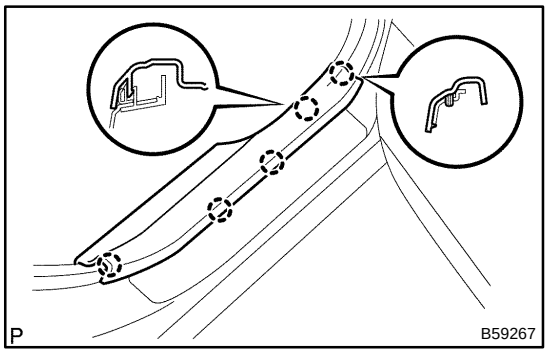

3. REMOVE REAR DOOR SCUFF PLATE RH

(a) Using a screwdriver, remove the rear door scuff plate RH.

HINT:

Tape the screwdriver tip before use.

(b) Employ the same manner described above to the other side.

4. REMOVE REAR DOOR SCUFF PLATE LH

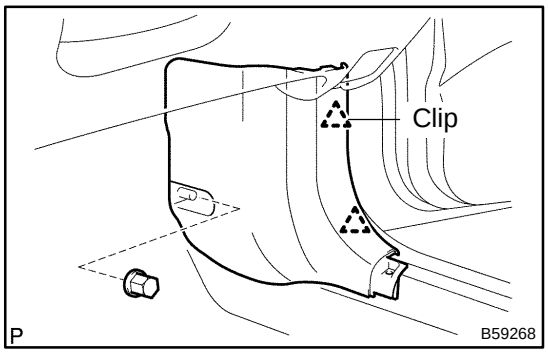

5. REMOVE COWL SIDE TRIM BOARD RH

(a) Remove the clip.

(b) Using a screwdriver, remove the cowl side trim board RH.

HINT:

Tape the screwdriver tip before use.

(c) Employ the same manner described above to the other side.

6. REMOVE COWL SIDE TRIM BOARD LH

7. REMOVE FRONT DOOR OPENING TRIM RH

8. REMOVE FRONT DOOR OPENING TRIM LH

9. REMOVE REAR DOOR OPENING TRIM RH

10. REMOVE REAR DOOR OPENING TRIM LH

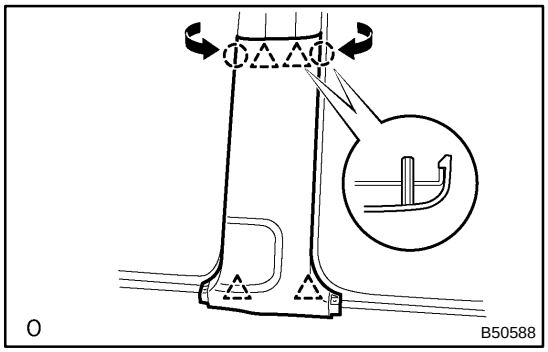

11. REMOVE CENTER PILLAR GARNISH LOWER RH

(a) Pull the center pillar garnish lower RH upward to remove it.

(b) Employ the same manner described above to the other side.

12. REMOVE CENTER PILLAR GARNISH LOWER LH

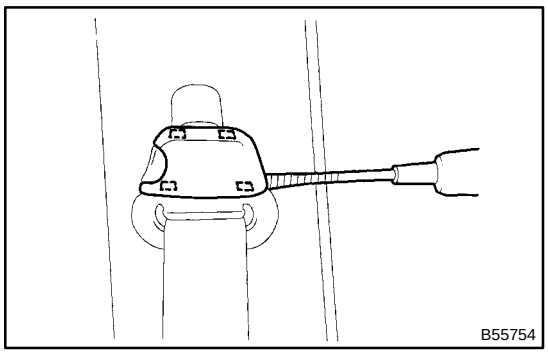

13. REMOVE CENTER PILLAR GARNISH RH

(a) Using a screwdriver, remove the shoulder anchor cover cap.

HINT:

Tape the screwdriver tip before use.

(b) Remove the bolt and front seat outer belt shoulder anchor.

(c) Remove the bolt and front seat outer belt floor anchor.

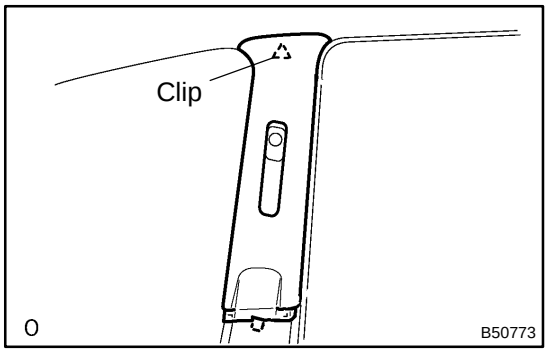

(d) Using a screwdriver, remove the center pillar upper garnish RH.

HINT:

Tape the screwdriver tip before use.

(e) Employ the same manner described above to the other side.

14. REMOVE CENTER PILLAR GARNISH LH

15. REMOVE REAR SEAT CUSHION ASSEMBLY (See page 72–6, 72–8)

16. REMOVE REAR SEAT BACK ASSY (FIXED TYPE REAR SEAT) (See page 72–8)

17. REMOVE REAR SEAT BACK ASSY (SEPARATED TYPE REAR SEAT) (See page 72–6)

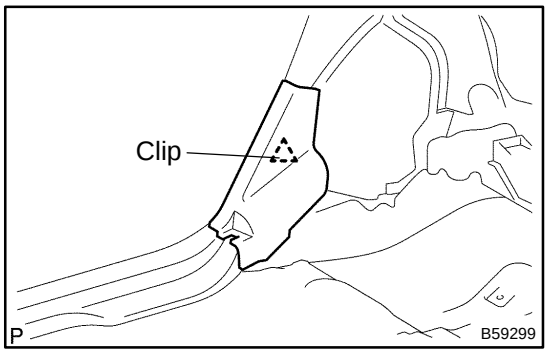

18. REMOVE REAR SEAT SIDE COVER RH (FIXED TYPE REAR SEAT)

(a) Using a screwdriver, remove the rear seat side cover RH.

HINT:

Tape the screwdriver tip before use.

(b) Employ the same manner described above to the other side.

19. REMOVE REAR SEAT SIDE GARNISH LH (FIXED TYPE REAR SEAT)

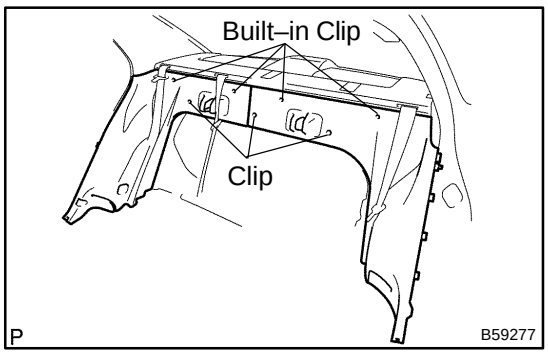

20. REMOVE ROOM PARTITION BOARD LH (SEPARATED TYPE REAR SEAT)

(a) Remove the 2 clips and 2 built–in clips room partition board LH.

21. REMOVE ROOM PARTITION BOARD RH (SEPARATED TYPE REAR SEAT)

(a) Remove the clip and 2 built–in clips room partition board RH.

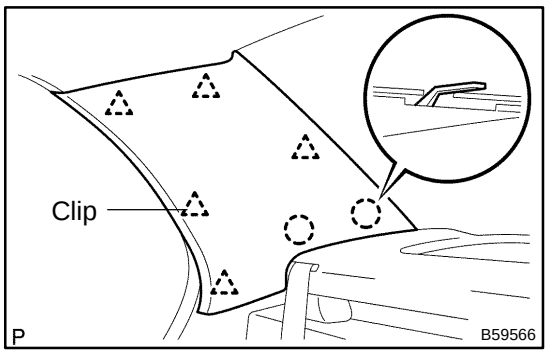

22. REMOVE ROOF SIDE GARNISH INNER RH

(a) Using a screwdriver, remove the roof side garnish inner RH.

HINT:

Tape the screwdriver tip before use.

(b) Employ the same manner described above to the other side.

23. REMOVE ROOF SIDE GARNISH INNER LH

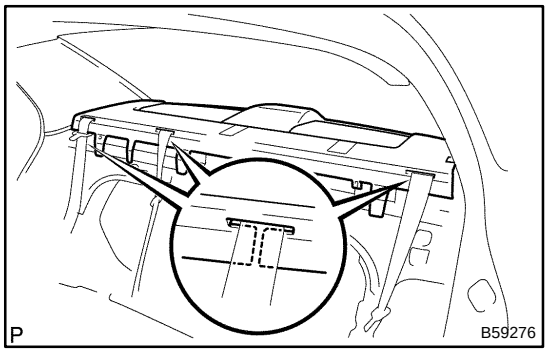

24. REMOVE PACKAGE TRAY TRIM PANEL ASSY

(a) Using a clip remover, remove the 7 clips.

(b) Pull out the belt from the slit and then remove the package tray trim panel assembly.

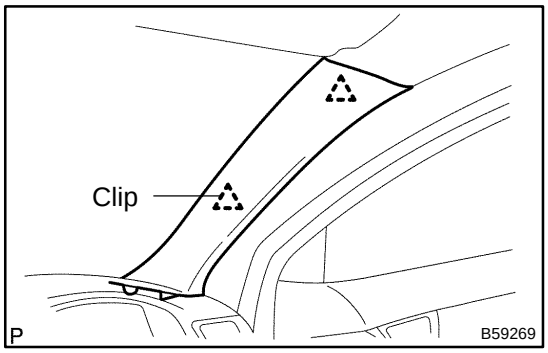

25. REMOVE FRONT PILLAR GARNISH RH

(a) Using a screwdriver, remove the front pillar garnish RH.

HINT:

Tape the screwdriver tip before use.

(b) Employ the same manner described above to the other side.

26. REMOVE FRONT PILLAR GARNISH LH

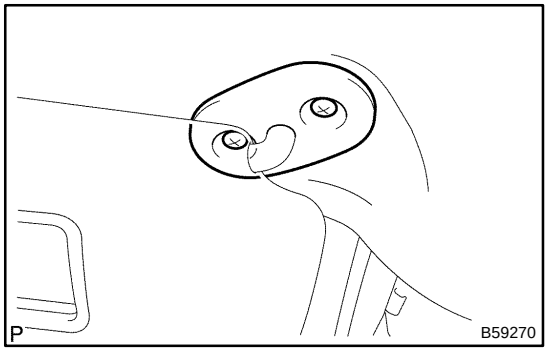

27. REMOVE RH VISOR ASSY

(a) Remove the 2 screws and RH visor assembly.

28. REMOVE LH VISOR ASSY

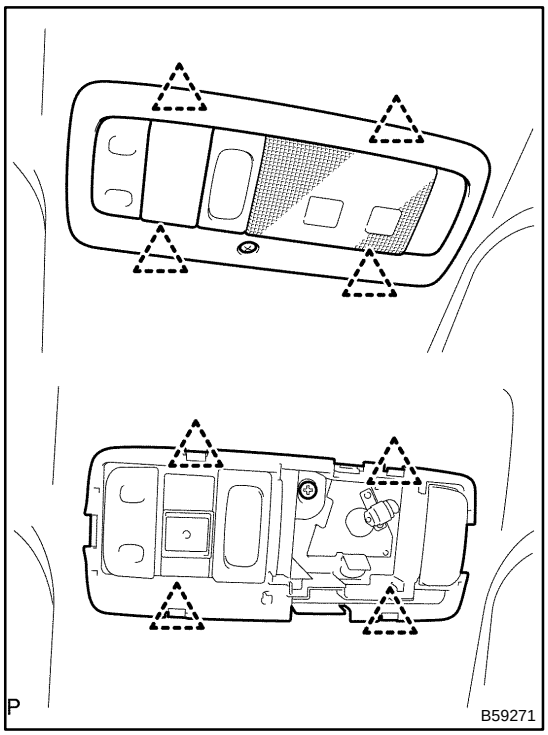

29. REMOVE MAP LAMP ASSY (W/ SLIDING ROOF)

(a) Remove the screw.

(b) Using a screwdriver, remove the map lamp lens and cover.

HINT:

Tape the screwdriver tip before use.

(c) Remove the screw.

(d) Using a screwdriver, remove the glove box lamp assembly.

HINT:

Tape the screwdriver tip before use.

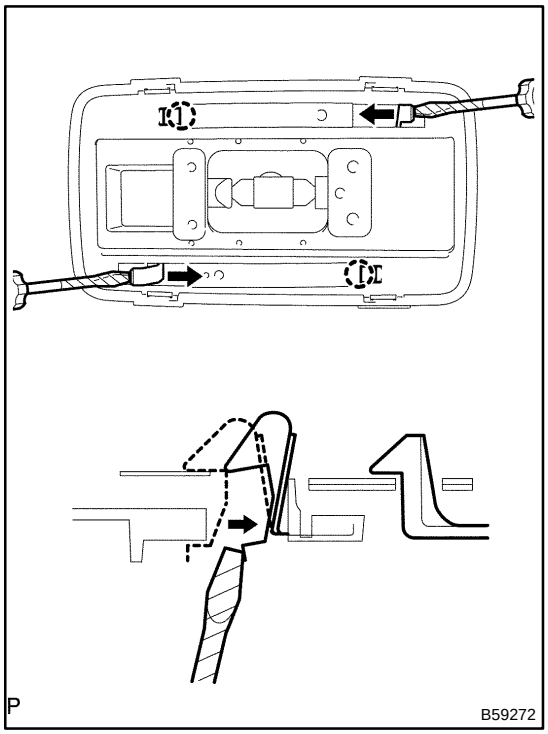

30. REMOVE ROOM LAMP ASSY NO.1

(a) Using a screwdriver, remove the lens cover.

(b) Using a screwdriver, remove the room lamp assembly No.1 as shown in the illustration.

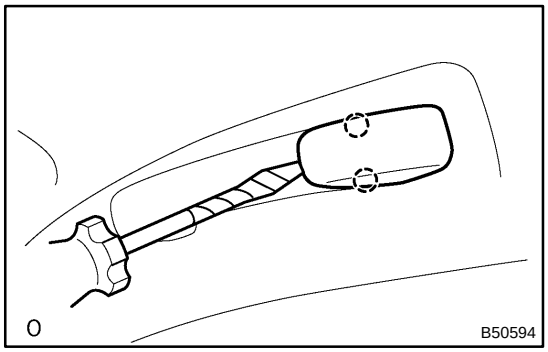

31. REMOVE ASSIST GRIP SUB–ASSY

(a) Using a screwdriver, remove the 2 assist grip covers.

(b) Remove the 2 screws and assist grip sub–assy.

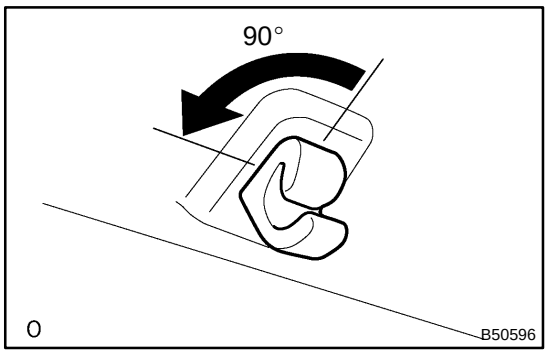

32. REMOVE VISOR HOLDER

(a) Remove the holder of the sun visor by turning it counter-clockwise.

33. REMOVE SUN ROOF OPENING TRIM MOULDING (W/ SLIDING ROOF)

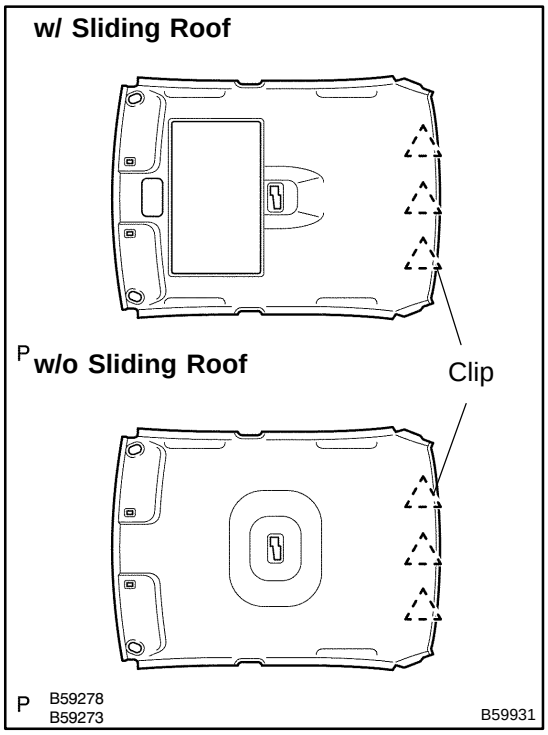

34. REMOVE ROOF HEADLINING ASSY

(a) Remove the 3 clips and roof headlining assembly.

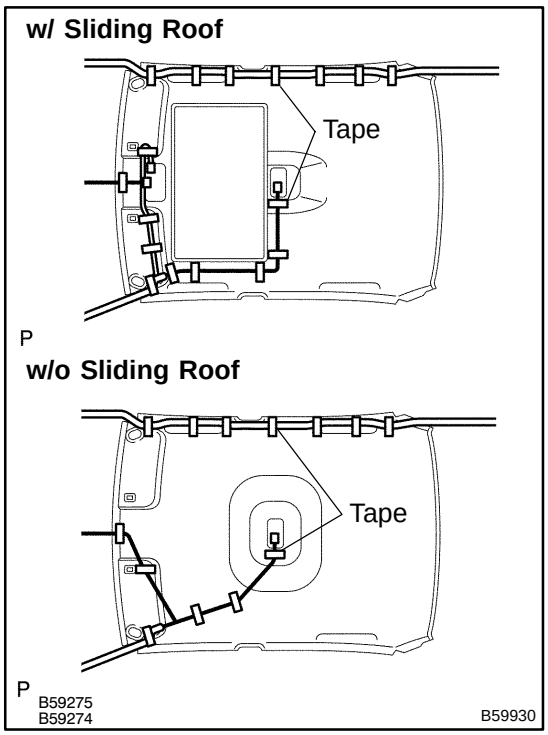

35. INSTALL ROOF HEADLINING ASSY

(a) Align the markings, and then install the wire harness with tape.

HINT:

Be careful for dirt or foreign objects not to stick to the adhered part when peeling off the double–stick tape.

(b) Attach the roof wire harness across the adhered part.

NOTICE:

Roof wire harness should be attached securely.

(c) Install the 3 clips.

36. INSTALL ROOM PARTITION BOARD RH (SEPARATED TYPE REAR SEAT)

37. INSTALL ROOM PARTITION BOARD LH (SEPARATED TYPE REAR SEAT)

38. INSTALL REAR SEAT SIDE COVER RH (FIXED TYPE REAR SEAT)

39. INSTALL REAR SEAT SIDE GARNISH LH (FIXED TYPE REAR SEAT)

40. INSTALL REAR SEAT BACK ASSY (FIXED TYPE REAR SEAT) (See page 72–8)

41. INSTALL REAR SEAT BACK ASSY (SEPARATED TYPE REAR SEAT) (See page 72–6)

SIDE MUDGUARD SUB–ASSY LH

760I4–02

REPLACEMENT

HINT:
Use the same procedures for the RH side and LH side.

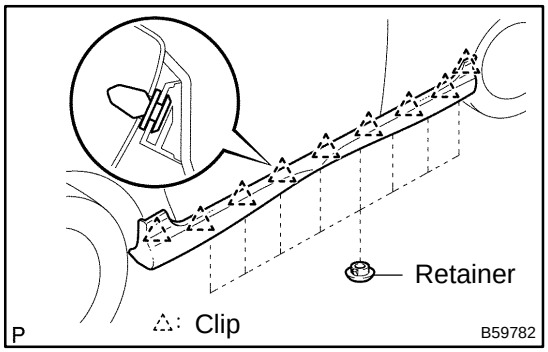

1. REMOVE SIDE MUDGUARD SUB–ASSY LH

(a) Using a clip remover, remove the 8 retainers and 9 clips.
(b) Using a moulding remover, remove the mudguard.

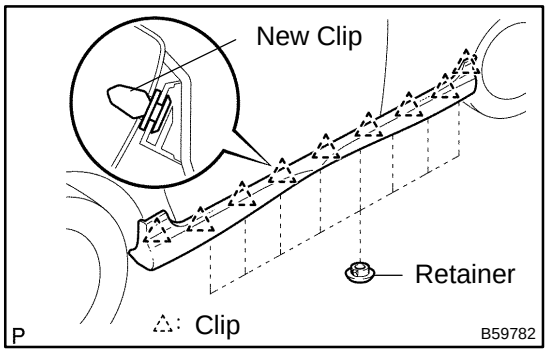

2. INSTALL SIDE MUDGUARD SUB–ASSY LH

(a) Install the mudguard with 9 new clips.
(b) Install the 8 retainers to the mudguard.

8002V–01

INSPECTION

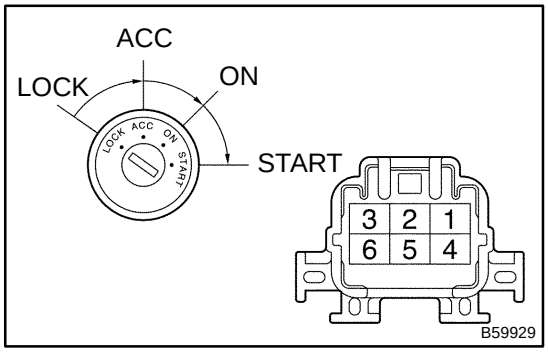

1. INSPECT IGNITION OR STARTER SWITCH ASSY

(a) Inspect the ignition switch.

Standard:

Switch position	Terminal No.	Specified condition
LOCK	–	No continuity
ACC	1 ⇔ 3	Continuity
ON	1 ⇔ 2 ⇔ 3 5 ⇔ 6	Continuity
START	1 ⇔ 2 4 ⇔ 5 ⇔ 6	Continuity

If the continuity is not as specified, replace the switch.

IGNITION OR STARTER SWITCH ASSY

8002U–01

REPLACEMENT

1. REMOVE STEERING COLUMN COVER (See page 50–8)

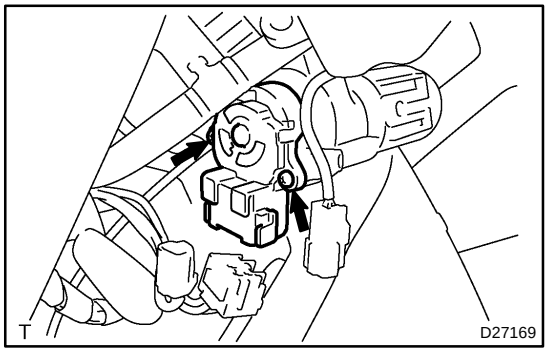

2. REMOVE IGNITION OR STARTER SWITCH ASSY

(a) Disconnect the ignition switch connector and unlock warning switch connector.

(b) Remove the 2 clamps.

(c) Remove the 2 screws and ignition switch.

CRUISE CONTROL ACTUATOR ASSY

82024–01

REPLACEMENT

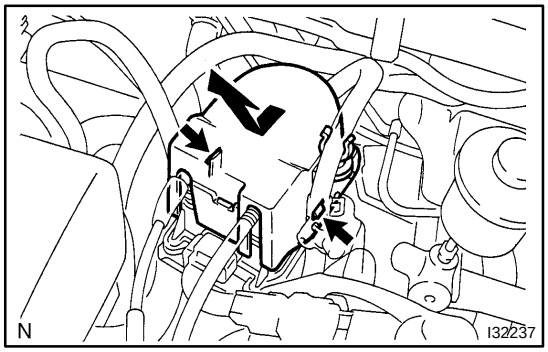

1. REMOVE CRUISE CONTROL ACTUATOR COVER

(a) Disengage the 2 claws, then remove the cruise control actuator cover.

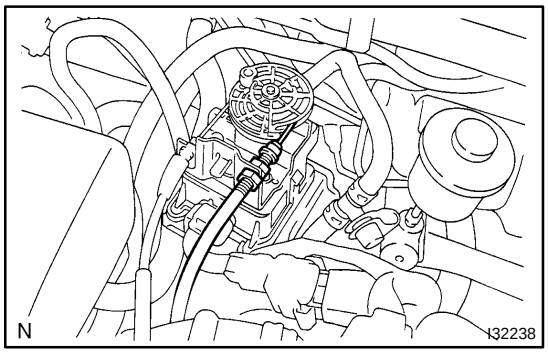

2. SEPARATE ACCELERATOR CONTROL CABLE ASSY

(a) Loosen the double nut and separate the accelerator control cable assy.

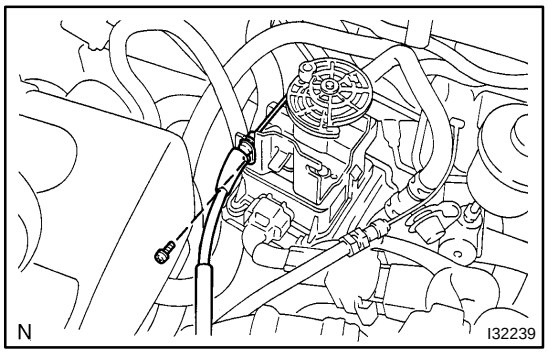

3. SEPARATE ACCELERATOR AUTO DRIVE CABLE ASSY

(a) Remove the screw and separate the accelerator auto drive cable assy.

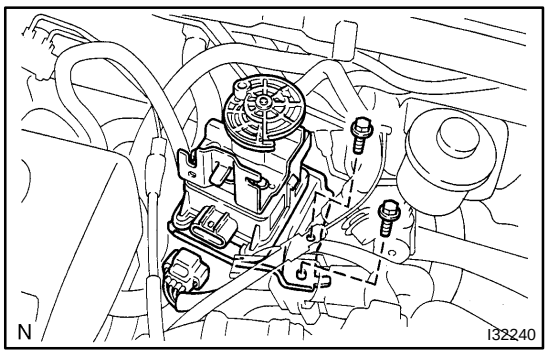

4. REMOVE CRUISE CONTROL ACTUATOR ASSY

(a) Disconnect the connector.

(b) Remove the 2 bolts and cruise control actuator assy.
Torque: 6.0 N·m (60 kgf·cm, 52 in.·lbf)

CLUTCH SWITCH ASSY

82025–01

REPLACEMENT

1. REMOVE CLUTCH SWITCH ASSY

(a) Disconnect the connector.

(b) Loosen the nut and remove the clutch switch assy.

CRUISE CONTROL ECU ASSY

82023–01

REPLACEMENT

1. **REMOVE METER HOOD SUB–ASSY(See page 71–17)**
2. **REMOVE COMBINATION METER ASSY(See page 71–17)**

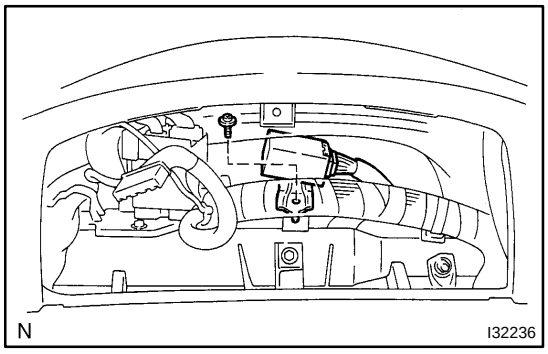

3. **REMOVE CRUISE CONTROL ECU ASSY**

(a) Disconnect the connector.

(b) Remove the screw and cruise control ECU assy.

CRUISE CONTROL SYSTEM

ON–VEHICLE INSPECTION

82021–01

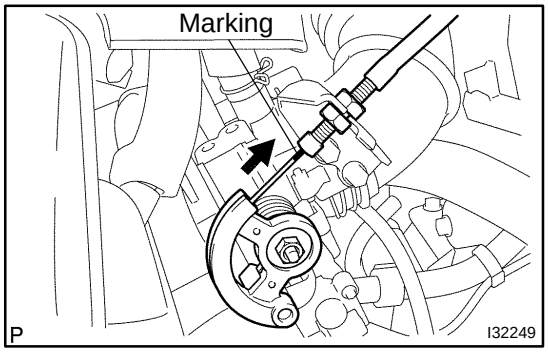

1. CHECK PLAY OF ACCELERATOR AUTO DRIVE CABLE ASSY

(a) Push the wire into the cable so as not to move the throttle link and put a mark on the position shown in the illustration.

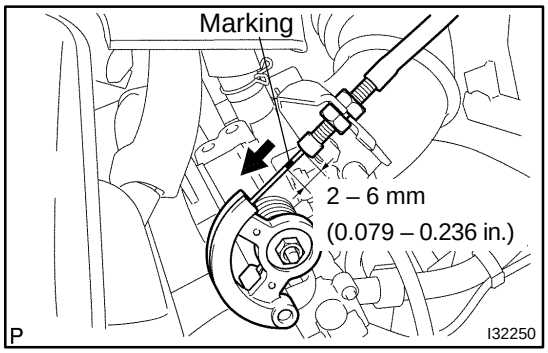

(b) Pull the wire and check the moved distance of the mark.

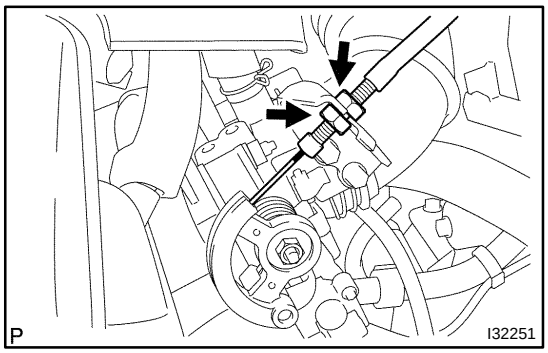

2. ADJUST PLAY IN ACCELERATOR AUTO DRIVE CABLE ASSY

(a) Changing the double nut position shown by the arrows, adjust the play to the standard value.
Standard: 2 – 6 mm (0.079 – 0.236 in.)

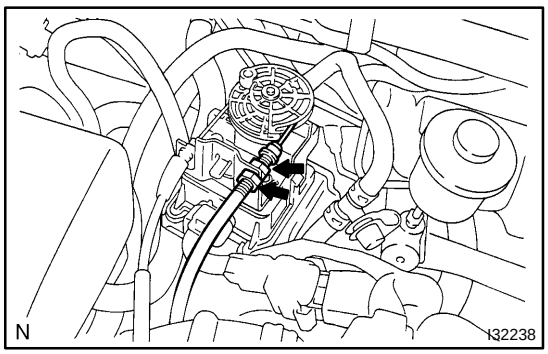

3. ADJUST PLAY IN ACCELERATOR CONTROL CABLE ASSY

(a) Remove the cruise control actuator cover and adjust the play in the accelerator control cable assy by changing the double nut position.

SPEED CONTROL MAIN SWITCH ASSY

82022–03

REPLACEMENT

1. **DISCONNECT BATTERY NEGATIVE TERMINAL**
2. **INSPECT PLACE FRONT WHEELS FACING STRAIGHT AHEAD**
3. **REMOVE HORN BUTTON ASSY(See page 60–13)**
4. **REMOVE STEERING WHEEL ASSY(See page 50–8)**
   SST 09950–50013 (09951–05010, 09952–05010, 09953–05020, 09954–05021)

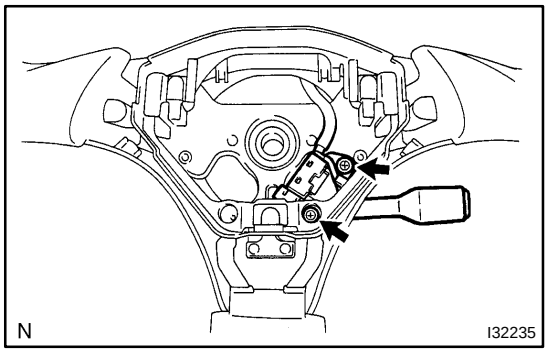

5. **REMOVE SPEED CONTROL MAIN SWITCH ASSY**
   (a) Remove the 2 screws and cruise control main switch assy.

6. **CENTER SPIRAL CABLE(See page 50–8)**
7. **INSTALL STEERING WHEEL ASSY(See page 50–8)**
8. **INSPECT STEERING WHEEL CENTER POINT(See page 50–8)**
9. **INSPECT HORN BUTTON ASSY(See page 60–13)**
10. **INSTALL HORN BUTTON ASSY(See page 60–13)**
11. **INSPECT SRS WARNING LIGHT(See page 05–424)**

BODY

9901B–10

ON–VEHICLE INSPECTION

1. Canada:

TIGHTEN BOLTS AND NUTS ON CHASSIS AND BODY

(a) Tighten the bolts and nuts on the chassis parts listed below, if necessary.
- Front axle and suspension
- Drive train
- Rear axle and suspension
- Brake system
- Engine mounting
- Other chassis parts

(b) Tighten the bolts and nuts on the body parts listed below, if necessary.
- Seat belt system
- Seats
- Doors and hood
- Body mountings
- Fuel tank
- Exhaust pipe system
- Other body parts

2. REPLACE AIR CONDITIONING FILTER

(a) Remove the glove compartment assembly.
(b) Remove the filter case from the filter outlet.
(c) Remove the filter from the filter case.
(d) Replace the filter with a new one.
(e) The installation procedures are the removal procedures in reverse order.

BRAKE

ON–VEHICLE INSPECTION

9900Z–11

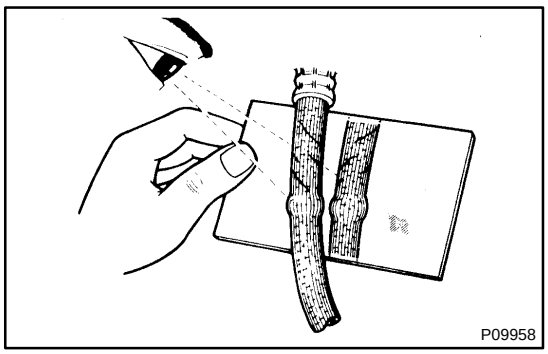

1. INSPECT BRAKE LINE PIPES AND HOSES

HINT:

Work in a well–lighted area. Turn the front wheels fully to the right or left before begining.

(a) Check all the brake lines and hoses for:
- Damage
- Wear
- Deformation
- Cracks
- Corrosion
- Leaks
- Bends
- Twists

(b) Check all the clamps for tightness and the connections for leakage.

(c) Check that the hoses and lines are not near sharp edges, moving parts and the exhaust system.

(d) Check that the lines are installed pass through the center of the grommets.

2. INSPECT FRONT BRAKE PADS AND DISCS (See page 32–25)

3. INSPECT REAR BRAKE LININGS AND DRUMS (See page 32–31)

4. INSPECT OR CHANGE BRAKE FLUID (See page 32–4)
Fluid: SAE J1703 or FMVSS No.116 DOT3

CHASSIS

9901A–07

ON–VEHICLE INSPECTION

1. INSPECT STEERING LINKAGE

(a) Check the steering wheel freeplay (See page 50–3).

(b) Check the steering linkage for looseness or damage.

(1) Check that the tie rod ends do not have excessive play.

(2) Check that the dust seals and boots are not damaged.

(3) Check that the boot clamps are not loose.

2. INSPECT STEERING GEAR HOUSING OIL

(a) Check the steering gear housing for oil leakage.

If oil is leaking, find the cause and repair it.

3. INSPECT BALL JOINTS AND DUST COVERS

(a) Inspect the ball joints for excessive looseness.

(1) Jack up the front of the vehicle and place wooden blocks with a height of 180 to 200 mm (7.09 to 7.87 in.) under the front tires.

(2) Lower the vehicle until the front coil spring has about half its ordinary load. Place stands under the vehicle for safety.

(3) Check that the front wheels are pointing straight ahead. Use chocks.

(4) Using a lever, pry up the end of the lower arm. Check the amount of play.

Maximum ball joint vertical play: 0 mm (0 in.)

If there is any play, replace the ball joint.

(b) Check the dust cover for damage.

4. INSPECT DRIVE SHAFT BOOTS

(a) Check the drive shaft boots for loose clamps, grease leakage, kink or damage.

5. CHECK TRANSAXLE OIL (FLUID)

(a) Visually check the transaxle for oil (fluid) leakage.

If oil is leaking, find the cause and repair it.

6. ROTATE TIRES (See page 28–1)

ENGINE

ON–VEHICLE INSPECTION

9900Y–13

HINT:

Inspect these items on a cooled down engine.

1. INSPECT DRIVE BELT (See page 14–4)

2. REPLACE SPARK PLUGS (See page 18–1)

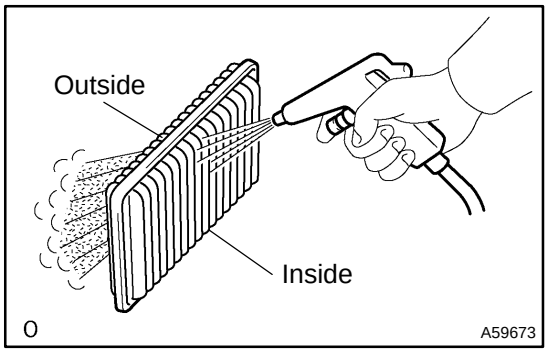

3. INSPECT AIR FILTER

(a) Remove the air filter.

(b) Visually check that the air filter is not excessively damaged, dirty or oily.

Peplace the air filter if necessary.

(c) Clean the filter with compressed air.

First blow from the inside of the filter thoroughly then repeat from the outside.

(d) Reinstall the air filter.

4. REPLACE AIR FILTER

(a) Replace the air filter with a new one.

5. REPLACE ENGINE OIL AND OIL FILTER (See page 17–10)

6. REPLACE ENGINE COOLANT (See page 16–7)

7. INSPECT GASKET IN FUEL TANK CAP (See page 12–1)

8. INSPECT FUEL LINES AND CONNECTIONS, FUEL TANK VAPOR VENT SYSTEM HOSES AND FUEL TANK BANDS

(a) Visually check the fuel lines for cracks, leakage, loose connections, deformation and tank band looseness.

9. INSPECT EXHAUST PIPES AND MOUNTINGS

(a) Visually check the pipes, hangers and connections for severe corrosion, leaks and damage.

10. INSPECT VALVE CLEARANCE (See page 14–5)

OUTSIDE VEHICLE

9900V–14

GENERAL MAINTENANCE

Performing these maintenance checks on the vehicle in the owner's responsibility. The owner may perform the maintenance or take the vehicle to a service center.

Check the parts of the vehicle described below on a daily basis. In most cases, special tool are not required. It is recommended that the owner perform these checks.

The procedures for general maintenance are as follows.

1. GENERAL NOTES

- Maintenance requirements vary depending on the country.
- Check the maintenance schedule in the owner's manual supplement.
- Following the maintenance schedule is mandatory.
- Determine the appropriate time to service the vehicle using either miles driven or time (month) elapsed, whichever reaches the specification first.
- Maintain similar intervals between periodic maintenance unless noted.
- Failng to check each vehicle part could lead to poor engine performance and increase exhaust emissions.

2. TIRES

(a) Check the tire pressure with a gauge. Make adjustments if necessary.

(b) Check the surfaces of tires for cuts, damage or excessive wear.

3. WHEEL NUTS

(a) Check for nuts that are loose or missing. Tighten them if necessary.

4. TIRE ROTATION

(a) Check the maintenance schedule in the owner's manual supplement.

5. WINDSHIELD WIPER BLADES

(a) Check the blades for wear or cracks when they are unable to wipe the windshield clean. Replace them if necessary.

6. FLUID LEAKS

(a) Check under the vehicle for leaking fuel, oil, water and other fluids.

(b) If you smell gasoline fumes or notice any leaks, the cause and correct it.

7. DOORS AND ENGINE HOOD

(a) All of the doors and the tailgate operate smoothly, and that all the latches lock securely.

(b) When the primary latch is released, check if the engine hood secondary latch prevents the hood from opening.

INSIDE VEHICLE

9900W–14

GENERAL MAINTENANCE

Performing these maintenance checks on the vehicle in the owner's responsibility. The owner may perform the maintenance or take the vehicle to a service center.

Check the parts of the vehicle described below on a daily basis. In most cases, special tool are not required. It is recommended that the owner perform these checks.

The procedures for general maintenance are as follows.

1. GENERAL NOTES

- Maintenance requirements vary depending on the country.
- Check the maintenance schedule in the owner's manual supplement.
- Following the maintenance schedule is mandatory.
- Determine the appropriate time to service the vehicle using either miles driven or time (month) elapsed, whichever reaches the specification first.
- Maintain similar intervals between periodic maintenance unless noted.
- Failng to check each vehicle part could lead to poor engine performance and increase exhaust emissions.

2. LIGHTS

(a) Check if that the headlights, stop lights, taillights, turn signal lights, and other lights illuminate or blink. Also, check if they have enough brightness.

(b) Check it the headlights are aimed properly.

3. WARNING LIGHTS AND BUZZERS

(a) Check that all the warning lights and buzzers are working.

4. HORN

(a) Check that the horn is working.

5. WINDSHIELD GLASS

(a) Check for scratches, pits or abrasions.

6. WINDSHIELD WIPER AND WASHER

(a) Check if the wind washers are aimed properly. Also, check if the washer fluid hits the center of the operating rage of each wiper on the windshield.

(b) Check if the wipers streak or not.

7. WINDSHIELD DEFROSTER

(a) When the heater or air conditioner is on the defroster setting, check if air comes out of the defroster outlet.

8. REAR VIEW MIRROR

(a) Check that the rear view mirror is securely mounted.

9. SUN VISORS

(a) Check that the sun visors move freely and are securely mounted.

10. STEERING WHEEL

(a) Check that the steering wheel has the proper freeplay. Also check for steering difficulty, freeplay in the steering wheel and unusual noises.

11. SEATS

(a) Check if the seat adjusters, seatback recliner and other front seat controls operate smoothly.

(b) Check that all the latches lock securely in all positions.

(c) Check that the locks hold securely in all latched positions.

(d) Check that the head restraints move up and down smoothly and that the locks hold securely in all latched positions.

(e) When the rear seatbacks are folded down, check if the latches lock securely.

12. SEAT BELTS

(a) Check that the seat belt system such as the buckles, retractors and anchors operate properly and smoothly.

(b) Check that the belt webbing is not cut, frayed, worn or damaged.

13. ACCELERATOR PEDAL

(a) Check the pedal for smooth operation, uneven pedal effort and catching.

14. CLUTCH PEDAL (See page 42–2)

(a) Check the pedal for smooth operation.

(b) Check that the pedal has the proper freeplay.

15. BRAKE PEDAL (See page 32–6)

(a) Check the pedal for smooth operation.

(b) Check that the pedal has the proper reserve distance and freeplay.

(c) Start the engine and check the brake booster function.

16. BRAKES

(a) In a safe place, check that the vehicle remains straight when applying the brakes.

17. PARKING BRAKE (See page 33–2)

(a) Check that the lever has the proper range of motion.

(b) On a low incline, check if the parking brake alone can stabilize the vehicle.

18. AUTOMATIC TRANSAXLE ”PARK” MECHANISM

(a) Check the lock release button of the selector lever for proper and smooth operation.

(b) On a low incline, check if the parking brake alone can satabilize the vehicle.

UNDER HOOD

9900X–13

GENERAL MAINTENANCE

1. GENERAL NOTES

- Maintenance requirements vary depending on the country.
- Check the maintenance schedule in the owner's manual supplement.
- Following the maintenance schedule is mandatory.
- Determine the appropriate time to service the vehicle using either miles driven or time (month) elapsed, whichever reaches the specification first.
- Maintain similar intervals between periodic maintenance unless noted.
- Failng to check each vehicle part could lead to poor engine performance and increase exhaust emissions.

2. WINDSHIELD WASHER FLUID

(a) Check that there is sufficient fluid in the tank.

3. ENGINE COOLANT LEVEL

(a) Check that the coolant level is between the "FULL" and "LOW" lines on the see–through reservoir.

4. RADIATOR AND HOSES

(a) Check that the front of the radiator is clean and free of leaves, dirt and bugs.

(b) Check the hoses for cracks, kinks, rotting loose connections.

5. BATTERY ELECTROLYTE LEVEL

(a) By rocking the vehicle, check that the electrolyte level of all the battery cells is between the upper and lower lines on the case.

6. BRAKE FLUID LEVEL

(a) Check that the brake fluid levels are near the upper level line on the see–through reservoirs.

7. ENGINE DRIVE BELT

(a) Check the drive belt for fraying, cracks, wear and oiliness.

8. ENGINE OIL LEVEL

(a) Check if the level of engine oil is between "F" and "L" on the dipstick with the engine turned off.

9. POWER STEERING FLUID LEVEL

(a) Check the level on the dipstick.

(b) The level should be in the "HOT" or "COLD" range depending on the fluid temperature.

10. AUTOMATIC TRANSMISSION FLUID LEVEL

(a) Park the vehicle on a level surface.

(b) With the engine idling and the parking brake applied, shift the selector into all the positions from "P" to "L". Then shift to the "P" position.

(c) Pull out the dipstick and wipe off the fluid with a clean shop rag. Re–insert the dipstick and check that the fluid level is in the "HOT" range.

(d) Perform this check with the fluid at the normal driving temperature:70 to 80˚C (158 to 176˚F).

HINT:

After extended driving under harsh conditions (high speeds, hot weather, heavy traffic or pulling a trailer), let the engine cool down for approximately 30 minutes before checking the fluid level.

11. EXHAUST SYSTEM

(a) Check for unusual exhaust sounds or abnormal exhaust fumes. Locate the cause and correct it.

CAUTION

This manual does not include all the necessary items about repair and service. This manual is made for the purpose of the use for the persons who have special techniques and certifications. In the cases that non–specialized or uncertified technicians perform repair or service only using this manual or without proper equipment or tool, that may cause severe injury to you or other people around and also cause damage to your customer’s vehicle.

In order to prevent dangerous operation and damages to your customer’s vehicle, be sure to follow the instruction shown below.

- Must read this manual thoroughly. It is especially important to have a good understanding of all the contents written in the PRECAUTION of ”INTRODUCTION” section.
- The service method written in this manual is very effective to perform repair and service. When performing the operations following the procedures using this manual, be sure to use tools specified and recommended. If using non–specified or recommended tools and service method, be sure to confirm safety of the technicians and any possibility of causing personal injury or damage to the customer’s vehicle before starting the operation.
- If part replacement is necessary, must replace the part with the same part number or equivalent part. Do not replace it with inferior quality.
- It is important to note that this manual contains various ”Cautions” and ”Notices” that must be carefully observed in order to reduce the risk of personal injury during service or repair, or the possibility that improper service or repair may damage the vehicle or render it unsafe. It is also important to understand that these ”Cautions” and ”Notices” are not exhaustive, because it is important to warn of all the possible hazardous consequences that might result from failure to follow these instructions.